CHAPTER 51

STRUCTURES - GENERAL

TABLE OF CONTENTS

Subject	Subject No.	Page
STRUCTURES - GENERAL	51-00	
General		1
ABBREVIATIONS	51-00-1	
Figure 1 Abbreviations		1
ASSEMBLY BREAKDOWN	51-00-2	
Figure 1 Major Assembly Breakdown		1
DIMENSIONS	51-00-3	
Figure 1 Principal Dimensions		1
STRUCTURAL CLASSIFICATION	51-00-4	
Figure 1 Structural Classification Diagram		2
Figure 2 Principal Structural Elements		3
Figure 3 Structural Significant Items		6
CROSS REFERENCES FOR BOEING DOCUMENTS	51-00-5	
General - Cross References for Boeing Source Documents		
STRUCTURAL REPAIR DEFINITIONS	51-00-6	
Figure 1 Process Diagram		5
REPAIR PROCEDURES - GENERAL	51-10	
INSPECTION AND REMOVAL OF DAMAGE	51-10-1	
Applicability		1
Damage Classification		1
Allowable Damage		2
Procedures to Remove Nicks, Scratches and Gouges		3
Burnishing		6
Damage That Can be Repaired		6
Replacement of the Part		8
Repair of Damage That is More Than the Allowable Damage Limits		8
Hole Preparation for Repairs		10
Procedure for Stop-Drilling of Cracks		11
Missing or Loose Fasteners in Secondary Structures		12
Corrosion Damage and Rework Limits		12
Corrosion Damage Removal Procedure and Inspection		13
Safety Procedures for Working with Chemicals		17
Identification of Metals		20

BOEING PROPRIETARY - Copyright © - Unpublished Work - See title page for details.

Subject	Subject No.	Page
INSPECTION AND REMOVAL OF DAMAGE	51-10-1	
Figure 1 Corrosion Removal Tools		25
Figure 2 Router and Template		26
Figure 3 The Use of the Hole Saw		30
Figure 4 The Use of the Squeezee		30
Figure 5 Abrasives for Sanding or Scouring		31
Figure 6 Band Sawing of Metallic and Non-Metallic Honeycomb Core Materials		32
Figure 7 Burnishing Restrictions on Primary Structure		33
PROTECTIVE TREATMENT OF METALLIC AND NON-METALLIC MATERIALS	51-10-2	
Applicability		1
General Information about Protective Treatments		1
Aluminum Alloy-Brush Chemical Conversion Coating Process		3
Magnesium Alloys - Conversion Coatings		8
Steel - Cadmium Plating Procedures		10
Protective Treatment of Mating Surfaces		11
Protective Treatment for Fastener Installation		12
The Use of Solvent-Dispersed Corrosion-Inhibiting Compounds for Corrosion Protection		13
Repairs for Finish Cracks on Graphite Composite Parts		23
Figure 1 - Classification of Dissimilar Metals		30
Figure 2 - Protective Finishes for Mating Surfaces		31
Figure 3 - Protective Treatment for Fastener Installation		33
Figure 4 - The Application of Solvent-Dispersed Corrosion-Inhibiting Compounds to the Aircraft Structure during the Assembly of the Airplane		34
Figure 5 - Corrosion Protective Treatment		39
HEAT TREAT VERIFICATION - HARDNESS AND CONDUCTIVITY TESTING OF METALS	51-10-3	
Applicability		1
General		1
Procedure		2
Figure 1 - Portable Hardness Testers		4
Figure 2 - Hardness and Conductivity Values of Aluminum Materials		6
Figure 3 - Hardness Values of Steel Materials		15
FIRE DAMAGE EVALUATION	51-10-4	
Fire Damage Evaluation		1
MERCURY SPILLAGE CORRECTIVE ACTION	51-10-5	
Mercury Spillage Corrective Action		1

BOEING PROPRIETARY - Copyright © - Unpublished Work - See title page for details.

Subject	Subject No.	Page
CORROSION REMOVAL, GENERAL REPAIRS AND SURFACE FINISHING REQUIREMENTS	51-10-6	
General		1
Safety Procedures		1
Corrosion Damage and Rework Limits		4
Corrosion Removal Techniques		5
Identification of Metals		6
Corrosion Rework Application		11
Corrosion Removal Procedures for Aluminum and Aluminum Alloys		12
Corrosion Removal Procedures for Magnesium Alloys		15
Corrosion Removal for Carbon Steel and Stainless Steel		18
Corrosion Removal Procedures for Titanium Alloys		20
Corrosion Removal Procedures for Plated Surfaces		20
Corrosion Removal from Chromium and Nickel Plated Parts		20
Corrosion Removal from Cadmium and Zinc Plated Parts		21
Cadmium Plating		22
Mechanical Corrosion Removal by Blasting		23
Aluminum Skin Corrosion Protection		24
Figure 1 Corrosion Damage and Rework Measurement Using Depth Dial Gage		25
Figure 2 Abrasives for Corrosion Removal		26
Figure 3 Blendout of Corrosion as Single Depression		27
Figure 4 Blendout of Multiple Pits in Corroded Area		28
Figure 5 Profile of Reworked Corroded Areas in Regions of Limited Access		29
Figure 6 Corrosion Removal and Control - Equipment and Materials		30

Subject	Subject No.	Page
HOLE DRILLING AND MACHINING OF COMPOSITE STRUCTURE	51-10-7	
General		1
Hole Drilling in Graphite or Graphite/Fiberglass Structures		1
Hole Drilling in Graphite-to-Aluminum Structures		2
Hole Drilling in Graphite-to-Titanium Structures		2
Countersinking in Graphite Structures		3
Deburring of Graphite Structures		3
Hole Quality of Graphite Structures		3
Rough Trimming Graphite Panels		4
Final Trimming Graphite Panels		4
Deburring Trimmed Graphite Panels		5
Hole Drilling in Aramid Structures		5
Hole Drilling in Aramid-to-Aluminum Structures		6
Hole Drilling in Aramid-to-Titanium Structures		6
Countersinking in Aramid Structures		6
Deburring of Aramid Structures		7
Hole Quality of Aramid Structures		7
Rough Trimming Aramid Panels		7
Final Trimming Aramid Panels		8
Deburring Trimmed Aramid Panels		8
Trimming Hybrid Aramid/Graphite Panels		9
Treatment of Fastener Holes in Composite Panels		9
Figure 1 - Cutting Tools for Composite Panels		10
Figure 2 - Cutters for Hole Drilling in Graphite and Aramid Structures		25
Figure 3 - Microstop/Vacuum Foot Setup for Countersinking Graphite and Aramid Structures		27
Figure 4 - Locator/Vacuum Shroud Setup for Countersinking Graphite Structures		29
Figure 5 - Foot-Phenolic Microstop Countersink		30
Figure 6 - Hole Requirements for Graphite and Aramid Structures		31
Figure 7 - Vacuum Pickup for Trimming Operations		33
Figure 8 - Cutter for Trimming Aramid Panels		34
Figure 9 - Machining with Valve Stem Cutter		35

BOEING PROPRIETARY - Copyright © - Unpublished Work - See title page for details.

Subject	Subject No.	Page
SHOT PEENING	51-10-8	
Introduction		1
General		1
FREEZE PLUG INSTALLATION	51-10-9	
General		1
Freeze Plug Installation		2
Figure 1 - Examples of Freeze Plug Installation		6
Figure 2 - Straight Shank Freeze Plug Installation		7
Figure 3 - Cylindricity		8
Figure 4 - Freeze Plugs in More Than One Structural Member		9
Figure 5 - Countersunk Freeze Plug Installation		10
Figure 6 - Countersink Diameter Versus Countersink Depth		11
GENERAL INSTRUCTIONS TO MAKE IT POSSIBLE TO OPERATE AIRPLANES WITH MISSING FASTENERS IN SECONDARY STRUCTURE	51-10-10	
Applicability		1
General		1
Permitted Dispatch Conditions		2
Figure 1 - Panels Where Missing Fasteners are not Permitted		5
Figure 2 - Missing Fastener Locations that are Permitted in Secondary Structure		8
SURFACE ROUGHNESS FINISH REQUIREMENTS	51-10-11	
Applicability		1
General		1
General Machining		1
Measurement		2
Figure 1 - Arithmetic Average Deviation		4

BOEING PROPRIETARY - Copyright © - Unpublished Work - See title page for details.

Subject	Subject No.	Page
REPAIR MATERIALS	51-20	
REPAIR MATERIALS - GENERAL	51-20-0	
SHEET METAL MATERIALS	51-20-1	
General		1
Aluminum Alloys		1
Magnesium Alloys		2
Titanium Alloys		3
Corrosion Resistant Steel		9
Inconel		9
Flat Patterns		11
Rules for Shimming		11
Figure 1 Approximately Equivalent Strength Materials		12
Figure 2 Material Substitution		13
Figure 3 Minimum Inner Radii for Straight Line Bends in Aluminum Sheet		14
Figure 4 Minimum Inner Radii for Straight Line Bends in Titanium Sheet		15
Figure 5 Equipment Used to Hand Drill and Cut Titanium		16
Figure 6 Minimum Inner Radii for Straight Line Bends in Steel Sheet		17
Figure 7 Flat Pattern Layout		18
Figure 8 Flat Pattern Set Back Graph		19
Figure 9 Developed Length Graph		20
Figure 10 Instructions for the Use of Shims		21
Figure 11 Thickness Tolerance of Different Sheet Materials		22
EXTRUSIONS AND FORMED SECTIONS	51-20-2	
General		1
Figure 1 Extrusions and Formed Sections - Index		2
Figure 2 Extrusions - AND10133		3
Figure 3 Extrusions - AND10134		4
Figure 4 Extrusions - AND10136		5
Figure 5 Extrusions - AND10137		6
Figure 6 Formed Sections - BAC1493		7
Figure 7 Formed Sections - BAC1498		8
Figure 8 Extrusions - BAC1503		9
Figure 9 Extrusions - BAC1505		10
Figure 10 Extrusions - BAC1506		12
Figure 11 Extrusions - BAC1509		14
Figure 12 Extrusions - BAC1510		15
Figure 13 Extrusions - BAC1512		16

BOEING PROPRIETARY - Copyright © - Unpublished Work - See title page for details.

Subject	Subject No.	Page
NONMETALLIC MATERIAL	51-20-3	
General		1
Figure 1 Protective Coatings, Sealants, and Solvents		2
Figure 2 Glass Fabrics, Aramid Fabrics, Graphite Tapes, Graphite Fabrics, and Nonmetallic Honeycomb Cores		9
Figure 3 Adhesives, Adhesive Films, Potting Compounds, and Resins		21
Figure 4 Abrasives		28
Figure 5 Miscellaneous Materials		30
REPAIR SEALING	51-20-4	
General		1
Figure 1 Substitute Sealants Data		3
EROSION PROTECTION	51-20-5	
General		1
Materials		1
Surface Preparation		1
Application of Erosion Coating		2
Application of Tape		4
Figure 1 Cure Times for Catalyzed Astrocoat Polyurethane Coatings		6
Figure 2 Erosion Protection Materials		7
Figure 3 Erosion Coating Areas		8
EQUIPMENT AND TOOLS FOR REPAIRS	51-20-6	
General		1
Figure 1 Miscellaneous Equipment		2
Figure 2 Hand Tools		6
COMPOSITE REPAIR MATERIAL ORDER DATA	51-20-7	
General - Order Data for Composite Repair Materials		1
Figure 1 Material Order Data		2
Figure 2 Necessary Dimensions for Ordering the Core		7

BOEING PROPRIETARY - Copyright © - Unpublished Work - See title page for details.

Subject	Subject No.	Page
FASTENERS - GENERAL	51-30-1	
Applicability		1
General		1
References		2
Fastener Types		2
Figure 1 - Fastener Symbols		5
Figure 2 - Red Lining of Fasteners		6
Figure 3 - Identification Marks on Boeing Standard Rivets		7
FASTENERS INSTALLATION AND REMOVAL	51-30-2	
Applicability		1
General		1
References		1
Solid Shank Rivets		2
Blind Rivets		4
Blind Bolts		4
Lockbolts and Hex-Drive Bolts		5
Radius Lead-In Bolts		9
Bolts		13
Installation of Fasteners in Composites		16
Figure 1 - Hole Finder		17
Figure 2 - Fastener Flushness Specifications		18
Figure 3 - Dimensions for Driving Non-Fluid-Tight Solid Shank Rivets		21
Figure 4 - Dimensions for Driving Fluid-Tight Solid Shank Rivets		24
Figure 5 - Analysis of Cracks in the Buttons of Solid Shank Rivets		26
Figure 6 - Gap Analysis for Rivet Heads and Buttons		29
Figure 7 - Removal of Solid Shank Rivets		32
Figure 8 - Installation of Blind Bolts and Blind Rivets		33
Figure 9 - Removal of Blind Rivets		36
Figure 10 - Removal of Blind Bolts		37
Figure 11 - Lockbolt and Hex-Drive Bolt Installation		38
Figure 12 - Washers with Lockbolts and Hex-Drive Bolts		44
Figure 13 - Pin and Collar Limits for Installed Lockbolts and Hex-Drive Bolts		49
Figure 14 - Installation of Radius Lead-In Bolts		59
Figure 15 - Installation of Bolts		66

BOEING PROPRIETARY - Copyright © - Unpublished Work - See title page for details.

Subject	Subject No.	Page
FASTENER SUBSTITUTION	51-30-3	
Applicability		1
General		1
References		1
Fastener Substitution Tables		2
Fasteners inactive for Boeing Design (Supersessions)		3
Figure 1 - Fastener Symbols		5
Figure 2 - Red Lining of Fasteners		21
Figure 3 - Identification Marks on Boeing Standard Rivets		88
TORQUE VALUES	51-30-4	
Applicability		1
General		1
References		1
Torque Wrench Adapters and Extensions		1
Figure 1 - Torque Values for External Wrenching Bolts in Metallic Materials		2
Figure 2 - Torque Values for Hex-Drive Bolts in Metallic Materials		6
Figure 3 - Torque Values for Radius Lead-In Bolts in Metallic Materials		7
Figure 4 - Torque Values for Fasteners in Composite Materials		8
Figure 5 - Torque Wrench Adapters and Extensions		10
FASTENER HOLE SIZES	51-30-5	
Applicability		1
General		1
References		1
Hole Definitions		1
Figure 1 - Boeing Process Specification References		3
Figure 2 - General Information for Fastener Holes in Metal Structure		4
Figure 3 - Solid Rivet Fastener Holes		5
Figure 4 - Permanent Straight Shank Fastener Holes		6
Figure 5 - Holes for Blind Rivets and Bolts		11
Figure 6 - Holes for Bolts		13
Figure 7 - Fluid Tight Fastener Holes		24
Figure 8 - Holes for Radius Lead-In Bolts		25
Figure 9 - Fastener Hole Sizes in Composites		31
FASTENER EDGE MARGINS	51-30-6	
Figure 1 - Fastener Edge Margin and Edge Distance		2
Figure 2 - Joint Examples		3
Figure 3 - Fastener Edge Margins		4

BOEING PROPRIETARY - Copyright © - Unpublished Work - See title page for details.

Subject	Subject No.	Page
COIN DIMPLING	51-30-7	
Coin Dimpling		1
Figure 1 - Coin Dimpling		4
Figure 2 - Predimple Hole Size		4
Figure 3 - Coin Dimpling Sheet Thickness		5
Figure 4 - Minimum Allowable Thickness for 100° Countersinking of Understructures		5
Figure 5 - Hot Dimpling		6
Figure 6 - Portable Coin Dimpling Equipment		7
COUNTERSINKING	51-30-8	
Applicability		1
General		1
References		1
The Use of the Microstop - Countersink Tool		1
Instructions to use the Microstop - Countersink Tool		2
Figure 1 - The Microstop-Countersink Tool		3
Figure 2 - Countersink Repair Washer		4
Figure 3 - Dimensions of Modified 82°/30° Countersink		7
Figure 4 - Countersink Detail for Flush Head Lockbolts and Hex-Drive Bolts		9
Figure 5 - Countersink Detail for Flush Head Radius Lead-In Bolts		10
Figure 6 - Fillet Relief for Bolts		11
Figure 7 - Minimum Sheet Thickness for Countersinking of Fasteners		12
COLD WORKING OF HOLES FOR FATIGUE IMPROVEMENT	51-30-9	
General		1
High Interference Sleeve Cold Working Process		2
Low Interference Sleeve Cold Working Process		5
High Interference Sleeveless Cold Working Process		6
Figure 1 - High Interference Sleeve Cold Working Process		8
Figure 2 - Alternate High Interference Sleeve Cold Working Process		17
Figure 3 - Low Interference Sleeve Cold Working Process		27
Figure 4 - High Interference Sleeveless Cold Working Process		34
Figure 5 - Mandrel Positions In High Interference Sleeveless Cold Working Process		39
Figure 6 - Puller for High Interference Sleeveless Cold Working Process		40
Figure 7 - Setup for High Interference Sleeveless Cold Working Process		41
Figure 8 - Tools for Cold Working of Holes		42
Figure 9 - Cold Working Limits in 7050-T74XX and 7050-T76XX Material		43

BOEING PROPRIETARY - Copyright © - Unpublished Work - See title page for details.

Subject	Subject No.	Page
STRENGTH OF FASTENERS	51-30-10	
General		1
Figure 1 - Strength of Solid Rivets		4
Figure 2 - Strength of Blind Fasteners		10
Figure 3 - Strength of Protruding Head Bolts, Lockbolts, and Hex Drive Bolts		14
Figure 4 - Strengths of Standard Flush Head Bolts, Lockbolts, and Hex Drive Bolts		18
Figure 5 - Strengths of Shear Flush Head Bolts, Shear Flush and Protruding Head Lockbolts and Hex Drive Bolts		21
Figure 6 - Strengths of Shear Flush Head Taper Shank Bolts		24
Figure 7 - Strengths of 70° Head Radius Lead-In Bolts		25
Figure 8 - Fastener Substitution for MS20470D and BACR15BB( )D Universal Head Rivets		26
Figure 9 - Fastener Substitution for MS20426D and BACR15BA( )D Rivets in Countersunk Holes		28
REPAIRS – GENERAL	51-40	
General		1
Partial Repairs		1
Multiple Repairs		1
REPAIRS FOR MINOR DENTS	51-40-1	
General		1
Reworking Dents		1
Filling Dents		1
Figure 1 - Dent Repair Materials		4
Figure 2 - Speedtape Application		5
TYPICAL WEB REPAIRS	51-40-2	
Figure 1 - Typical Web Repairs		1
TYPICAL FORMED SECTION REPAIRS	51-40-3	
Figure 1 - Typical Formed Section Repairs		1
TYPICAL EXTRUDED SECTION REPAIRS	51-40-4	
Figure 1 - Typical Extruded Section Repairs		1
Figure 2 - Extruded Section Repairs		8
METAL-TO-METAL STRUCTURAL REPAIR ADHESIVE BOND PROCEDURES	51-40-5	1
ALLOWABLE DAMAGE DATA FOR ALUMINUM HONEYCOMB STRUCTURE APPLICABILITY	51-40-6	
General Information about Allowable Damage to Aircraft Structure		1
Figure 1 - Damage Evaluation - Aluminum Honeycomb Structure		3
TYPICAL MAT MOLDED FIBERGLASS REPAIR	51-40-7	
Typical Mat Molded Fiberglass Repairs		1
Figure 1 - Repair Mixtures and Mixing Procedures		3
Figure 2 - Deleted		5
Figure 3 - Mat Molded Fiberglass Repair		6

BOEING PROPRIETARY - Copyright © - Unpublished Work - See title page for details.

Subject	Subject No.	Page
REPAIRS TO NONSTRUCTURAL METAL COMPONENTS USING FIBERGLASS OVERLAYS	51-40-8	
Introduction		1
Preparation for Repair		1
Primer Application		1
Application of Fiberglass Overlay		2
Restoration of Finish		3
Figure 1 Fiberglass Cloth Overlay Repair		5
Figure 2 Preparation of Adhesive for Fiberglass		6
GLASS FABRIC REINFORCED EPOXY AND PHENOLIC LAMINATES REPAIR	51-40-9	
Introduction		1
How to Use this Portion of the Manual		2A
Preparation of Damaged Area		2A
Repairs with Normal Curing Period		3
Repairs with Short Curing Period		6
External Repairs with Accelerated Cure		7
External Repairs with Accelerated Cure Laminates		8
Repair of Aluminum Flame-Sprayed Coatings		10
Repair of Aluminum Flame-Sprayed Coating - Full Conductivity		12
Repair of Aluminum Flame-Sprayed Conductivity Surface of ADF Sense Antennas		13
Repair of Tedlar Film		17
Repairs to High Temperature Resistant Phenolic Glass Fabric Laminates with Honeycomb Core		17
Repairs ot High Temperature Resistant Epoxy Glass Fabric Laminates with Honeycomb Core		17
Repairs of Dents		18
Figure 1 Fiberglass Reinforced Plastics Damage Allowables and Repair Index		19
Figure 2 Typical Honeycomb Assembly Repair		26
Figure 3 Typical Honeycomb Assembly Repair with Short Cure Period		29
Figure 4 Potting and Laminating Resin Cure Temperature		31
Figure 5 External Repair with Accelerated Cure for Glass Fabric Reinforced Honeycomb Components		32
Figure 6 ADF Sense Antennas		34
Figure 7 ADF Sense Antennas, Repair Requirements		35
Figure 8 Preparation and Curing Times of Silver Epoxy Resin		36
Figure 9 Water Removal from Honeycomb Sandwich		37
Figure 10 Repair of Honeycomb Sandwich After Water Removal		38
Figure 11 Repairs of Dents		39

Subject	Subject No.	Page
ALUMINUM-FACED PAPER HONEYCOMB STRUCTURE REPAIR FOR GALLEYS	51-40-10	
General		1
Removal of Moisture		1
Repair of Dents		1
Repair of Delaminated Areas		2
Repair to Skin and Core		3
Panel Replacement		4
Sealing		5
Finish		6
Cleaning		6
Adhesive		7
Potting Compound		7
Potting Compound for the Installation of Inserts		7
Equipment and Materials		8
Figure 1 Allowable Damage and Repair Index		9
Figure 2 Repair to Delaminated Free Edge of Panel		10
Figure 3 Repair to Skin and Core		11
Figure 4 Repair to Damaged Panel		12
Figure 5 Typical Sealant Applications		13
POLYIMIDE ACOUSTIC PANEL REPAIRS	51-40-11	
Introduction		1
Repair Procedures		1
Preparation of Damaged Area		1
Honeycomb Core Repair		2
Figure 1 Potted Filler Repair		6
Figure 2 Skin Crack Repair		8
Figure 3 Delaminated Edgeband Repair		9
Figure 4 Repairs to Holes and Cracks of Edgeband		10
GRAPHITE, ARAMID, AND GRAPHITE/ARAMID/GLASS FABRIC HYBRID REINFORCED EPOXY LAMINATES AND NONMETALLIC HONEYCOMB SANDWICH REPAIRS - ROOM TEMPERATURE CURE (WET LAYUP)	51-40-12	
General		1
Repair Procedures Common to Various Repairs		3
Typical Repairs		16
Figure 1 Repair Index		27
Figure 2 Resin Specifications and Mixing Procedures		28
Figure 3 Water Removal From Honeycomb Sandwich		30
Figure 4 Sanding and Overlap Requirements		31
Figure 5 Application of Pressure During Cure		32
Figure 6 Repair Ply Materials		34
Figure 7 Extra Repair Ply Materials		36
Figure 8 Potting and Laminating Resin Cure Temperature		37

Subject		Subject No.	Page
Figure 9	Repair 1 - Repair of Damage to One Skin of Honeycomb Panel.		38
Figure 10	Repair 2 - Repair of Damage, 0.50-Inch Diameter or Less, to One Skin and Honeycomb Core		39
Figure 11	Repair 3 - Repair of Damage, Greater than 0.50-Inch Diameter, to One Skin and Honeycomb Core		40
Figure 12	Repair 4 - Repair of Damage to Both Skins and Honeycomb Core		41
Figure 13	Repair 5 - Repair of Damage to Honeycomb Panel Where Access is Limited to One Side. . . .		42
Figure 14	Repair 6 - Repair of Delamination Between Plies of Panel Edgeband.		43
Figure 15	Repair 7 - Repair of Damage to Plies on Edge of Honeycomb Panel.		44
Figure 16	Repair 8 - Repair of Damage to Honeycomb Core on Edge of Honeycomb Panel.		45
Figure 17	Repair 9 - Repair of Damaged Panel Attach Hole in Honeycomb Panel Edgebands or Along Edges of Solid Laminate Panels.		46
Figure 18	Repair 10 - Repair of Damage, 0.50-Inch Diameter or Less, to Solid Laminates		48
Figure 19	Repair 11 - Repair of Damage, Greater than 0.50-Inch Diameter, to Solid Laminates.		49
Figure 20	Repair 12 - Repair of Dents		50
Figure 21	Repair 13 - Repair of Lightning Damage at Trailing Edge		51
Figure 22	Repair 14 - Repair of Small Damage to One Skin.		52
GRAPHITE, ARAMID, AND GRAPHITE/ARAMID/GLASS HYBRID REINFORCED EPOXY LAMINATES AND NONMETALLIC HONEYCOMB SANDWICH REPAIRS - 250 DEGREE F (121 DEGREE C) CURE.		51-40-13	
General			1
Repair Procedures Common to Various Repairs			3
Typical Repairs			17
Figure 1	Repair Index.		26
Figure 2	Resin, Prepreg, and Adhesive Specifications and Mixing Procedures		27
Figure 3	Water Removal From Honeycomb Sandwich		32
Figure 4	Sanding and Overlap Requirements.		33
Figure 5	Application of Pressure During Cure		34
Figure 6	Repair Ply Materials.		36
Figure 7	Extra Repair Ply Materials.		38

Subject | Subject No. | Page

Figure 8 Repair Cure Cycle 39
Figure 9 Sealer Resin Cure Temperature and Heat Lamp Temperature Curve. 40
Figure 10 Repair 1 - Repair of Damage to One Skin of Honeycomb Panel. 41
Figure 11 Repair 3 - Repair of Damage, Greater than 0.50-Inch Diameter, to One Skin and Honeycomb Core 42
Figure 12 Repair 4 - Repair of Damage to Both Skins and Honeycomb Core 43
Figure 13 Repair 5 - Repair of Damage to Honeycomb Panel Where Access is Limited to One Side. . . . 44
Figure 14 Repair 7 - Repair of Damage to Plies on Edge of Honeycomb Panel. 47
Figure 15 Repair 8 - Repair of Damage to Honeycomb Core on Edge of Honeycomb Panel. 48
Figure 16 Repair 9 - Repair of Damaged Panel Attach Hole in Honeycomb Panel Edgebands or Along Edges of Solid Laminate Panels. 49
Figure 17 Repair 11 - Repair of Damage, Greater than 0.50-Inch Diameter, to Solid Laminates. . . 51
Figure 18 Repair 13 - Repair of BMS 8-289 Aluminum Foil 52

GRAPHITE, ARAMID, AND GRAPHITE/ARAMID/GLASS HYBRID REINFORCED EPOXY LAMINATES AND NONMETALLIC HONEYCOMB SANDWICH REPAIRS - 350 DEGREE F (177 DEGREE C) CURE. 51-40-14
General 1
Repair Procedures Common to Various Repairs 3
Typical Repairs 17
Figure 1 Repair Index. 26
Figure 2 Resin, Prepreg, and Adhesive Specifications and Mixing Procedures 27
Figure 3 Water Removal From Honeycomb Sandwich 32
Figure 4 Sanding and Overlap Requirements. 33
Figure 5 Application of Pressure During Cure 34
Figure 6 Repair Ply Materials. 36
Figure 7 Extra Repair Ply Materials. 38
Figure 8 Repair Cure Cycle 39
Figure 9 Sealer Resin Cure Temperature and Heat Lamp Temperature Curve. 40
Figure 10 Repair 1 - Repair of Damage to One Skin of Honeycomb Panel. 41
Figure 11 Repair 3 - Repair of Damage, Greater than 0.50-Inch Diameter, to One Skin and Honeycomb Core 42

Subject		Subject No.	Page
Figure 12	Repair 4 - Repair of Damage to Both Skins and Honeycomb Core		43
Figure 13	Repair 5 - Repair of Damage to Honeycomb Panel Where Access is Limited to One Side		44
Figure 14	Repair 7 - Repair of Damage to Plies on Edge of Honeycomb Panel		47
Figure 15	Repair 8 - Repair of Damage to Honeycomb Core on Edge of Honeycomb Panel		48
Figure 16	Repair 9 - Repair of Damaged Panel Attach Hole in Honeycomb Panel Edgebands or Along Edges of Solid Laminate Panels		49
Figure 17	Repair 11 - Repair of Damage, Greater than 0.50-Inch Diameter, to Solid Laminates		51
Figure 18	Repair 13 - Repair of BMS 8-289 Aluminum Foil		52
GRAPHITE, ARAMID, AND GRAPHITE/ARAMID/GLASS FABRIC HYBRID REINFORCED EPOXY LAMINATES AND NONMETALLIC HONEYCOMB SANDWICH REPAIRS - 200°F (93°C) TO 230°F (110°C) CURE			
WET LAYUP REPAIR METHOD		51-40-15	
General			1
Repair Procedures Common to Various Repairs			2
Typical Repairs			19
Figure 1	Repair Index		26
Figure 2	Resin Specifications and Mixing Procedures		27
Figure 3	Water Removal From Honeycomb Sandwich		29
Figure 4	Sanding and Overlap Requirements		30
Figure 5	Application of Pressure During Cure		31
Figure 6	Repair Ply Materials		33
Figure 7	Extra Repair Ply Materials		35
Figure 8	Potting and Laminating Resin Cure Cycle		36
Figure 9	Heat Lamp Temperature Curve		38
Figure 10	Sealer Resin Cure Temperature		39
Figure 11	Repair 1 - Repair of Damage to One Skin of Honeycomb Panel		40
Figure 12	Repair 3 - Repair of Damage, Greater than 0.50-Inch Diameter, to One Skin and Honeycomb Core		41
Figure 13	Repair 4 - Repair of Damage to Both Skins and Honeycomb Core		42
Figure 14	Repair 5 - Repair of Damage to Honeycomb Panel Where Access is Limited to One Side		43
Figure 15	Repair 7 - Repair of Damage to Plies on Edge of Honeycomb Panel		44
Figure 16	Repair 8 - Repair of Damage to Honeycomb Core on Edge of Honeycomb Panel		45
Figure 17	Repair 9 - Repair of Damaged Panel Attach Hole in Honeycomb Panel Edgebands or Along Edges of Solid Laminate Panels		46
Figure 18	Repair 10 - Repair of Damage, 0.50-Inch Diameter or Less, to Solid Laminates		48

Subject	Subject No.	Page
Graphite, Aramid, and Graphite/Aramid/Glass Fabric Hybrid Reinforced Epoxy Laminates and Nonmetallic Honeycomb Sandwich Repairs - 200°F (93°C) To 230°F (110°C) Cure (Continued)	51-40-15	
Figure 19 - Repair 11 - Repair of Damage, Greater than 0.50-Inch Diameter, to Solid Laminates		49
Figure 20 - Repair 6 – Repair of Delaminations Between Plies of Panel Edgeband		53
Figure 21 - Vacuum Bagging Restrictions		54
Locations Of Principal Composite Components	51-40-16	
General		1
Figure 1 - Locations of Principal Composite Components		2
Allowable Damage And Repair Of Aluminum Foil (BMS 8-289)	51-40-17	
General		1
Allowable Damage for Aluminum Foil (BMS 8-289)		1
Time-Limited Repair for Aluminum Foil (BMS 8-289)		2
Permanent Repair for Aluminum Foil (BMS 8-289)		2
Permanent Repair of Aluminum Foil Joint Splice (BMS 8-289)		5
Figure 1 - Location of Aluminum Foil (BMS 8-289) on Inner Surface		7
Figure 2 - Resin Specifications, Mixing Procedures, and Curing		9
Figure 3 - Repair Layup		10
Figure 4 - Cure Cycle		11
Figure 5 - Aluminum Foil Repair		12
Glass Fabric Strengthened Epoxy Laminates And Nonmetallic Honeycomb Sandwich Repairs - 250°F (121°C) Cure	51-40-19	
General		1
Repair Procedures Common to Various Repairs		3
Typical Repairs		19
Figure 1 - Repair Index		28
Figure 2 - Resin, Prepreg, and Adhesive Specifications and Mixing Procedures		29
Figure 3 - Repair Ply Materials		33
Figure 4 - Repair Ply Cure Cycle		34
Figure 5 - Potting and Laminating Resin Cure Temperature		35
Figure 6 - Sanding and Overlap Requirements		36
Figure 7 - Vacuum Bag Restrictions		37
Figure 8 - Water Removal from the Honeycomb Sandwich		39
Figure 9 - Ply Compaction Vacuum Bag System		40
Figure 10 - Application of Pressure During Cure for Repair Plies (250°F [121°C] Cure)		41
Figure 11 - Application of Pressure During Cure for Core Repair (250°F [121°C] Cure)		42
Figure 12 - Repair 1 - Repair the Damage to One Skin of the Honeycomb Panel		43
Figure 13 - Repair 2 - Repair of Damage, Greater than 0.50-Inch Diameter, to One Skin and Honeycomb Core		44
Figure 14 - Repair 3 - Repair the Damage to Both Skins and Honeycomb Core		45
Figure 15 - Repair 4 - Repair the Damage to the Honeycomb Panel When Access is Limited to One Side		46

BOEING PROPRIETARY - Copyright © - Unpublished Work - See title page for details.

Subject	Subject No.	Page
Glass Fabric Strengthened Epoxy Laminates And Nonmetallic Honeycomb Sandwich Repairs - 250°F (121°C) Cure (Continued)	51-40-19	
Figure 16 - Repair 5 - Repair the Damage to the Plies on the Edge of the Honeycomb Panel		49
Figure 17 - Repair 6 - Repair the Damage to the Honeycomb Core on the Edge of the Honeycomb Panel		50
Figure 18 - Repair 7 - Repair the Damaged Panel Attach Hole in the Honeycomb Panel Edgebands or Along the Edges of Solid Laminate Panels		51
Figure 19 - Repair 8 - Repair the Damage, 0.050-inch Diameter or Less, to Solid Laminates, or Fastener Holes		53
Figure 20 - Repair 9 - Repair the Damage, Greater than 0.50-inch Diameter, to Solid Laminates		54
General Repair Section - Aluminum Skin, Aluminum Honeycomb Core Sandwich Repairs - 250°F (121°C) Cure	51-40-20	
Applicability		1
General Information		1
References		1
Definitions		2
Repair Summary		3
Figure 1 - Repair Options		7
Figure 2 - Flow Chart of the Repair Steps		9
Find the Limits of the Damage		11
Remove the Damage		12
Make the repair parts		14
Installation of the Honeycomb Repair Core		16
Inspect the fit of the repair parts		23
Use of the Surface Preparation Procedures		24
The Phosphoric Acid Containment System (PACS) Procedure		25
The Phosphoric Acid Non-Tank Anodizing (PANTA) Procedure		34
The Boegel (AC-130) Prebond Treatment Procedure		42
Application of BMS 5-89 Adhesive Primer to the Bond Surface		46
Hydrofluoric (HF) - Alodine Procedure		48
Application of BAC 5710, Type 60 Adhesive Primer		52
Application of BMS 5-101 Film Adhesive		53
Application of BMS 5-92 or BMS 5-141 Paste Adhesive		57
Cure the bond		59
Do an examination of the bonded repair		61
Clean, seal and finish		62
Figure 3 - Damage Removal		63
Figure 4 - Phosphoric Acid Containment System (PACS)		65
Figure 5 - Phosphoric Acid Non-Tank Anodize (PANTA) Layup		68
Figure 6 - Polarized Light Test - Verification of Anodic Oxide Film		69
Figure 7 - Repair Doubler Specifications for Flush Repairs		70
Figure 8 - Repair Doubler Specifications for External Patch Repairs		74
Figure 9 - Installation of the Repair Core		78
Figure 10 - Cure Time for BMS 5-92, Two-part Paste Adhesive		80
Figure 11 - Cure Time for BMS 5-141 Paste Adhesive		82
Figure 12 - Installation of the Repair Doubler		83
Figure 13 - Thermocouple Locations		89
Figure 14 - Layup of Vacuum Bagging Materials		90

BOEING PROPRIETARY - Copyright © - Unpublished Work - See title page for details.

Subject	Subject No.	Page
Repair of a Disbond at an Edge of Aluminum Honeycomb Structure	51-40-21	
Applicability		1
General		1
References		1
Repair Procedures		1
Figure 1 - Repair of Disbonds at an Edge		3
Repair to Small Damage	51-40-22	
Applicability		1
General		1
References		1
Repair Instructions		2
Figure 1 - External Doubler Repair of a Dent		4
Figure 2 - External Doubler Repair of a Nick, Gouge, or Crack in the Skin		5
Figure 3 - Potted Core Repair for Small Damage		6
Septumized Core Repairs	51-40-23	
Applicability		1
General		1
References		1
Remove the Damage		1
Partial Depth Septumized Core Repair		2
Full Depth Septumized Core Repair		3
Complete the Repair		4
Figure 1 - Bonded Doubler Repair That Uses an Internal Septum For a Less Than Full Depth Core Replacement		5
Figure 2 - Bonded Doubler Repair That Uses Two Cores and an Internal Septum for Full Core Replacement		7
Repair to Large Damage	51-40-24	
Applicability		1
General		1
References		1
Repair Instructions		1
Figure 1 - Repair of Damage Away From the Panel Edge		2
Figure 2 - Repair of Damage at the Edge of a Panel		7
Figure 3 - Repair of Damage That is from Edge to Edge		16
Repair General - Titanium Surface Preparation Procedures	51-40-25	
Applicability		1
General		1
References		1
Definitions		1
Repair Summary		2
Find the Limits of the Damage		3
Remove the Damage		4
Make the Repair Parts		5
The Boegel (AC130) Prebond Treatment Procedure		6
Application of BMS 5-137 Type 1, Class 3 or BMS 5-89 Type 2 Adhesive Primer to the Bond Surface		9
Figure 1 - Damage Removal Procedures		12

BOEING PROPRIETARY - Copyright © - Unpublished Work - See title page for details.

Subject	Subject No.	Page
SUPPORT OF STRUCTURES FOR REPAIRS	51-50	
General		1
Support Of Airplanes In Jig Position	51-50-1	
Raise Airplane per 51-50-2		1
Procedure Equipment per Figure 1		1
Level Airplane per 51-50-3		1
Support Airplane per Figure 2		1
Alternative Support of the Fuselage in the Jig Position with a Window Support Assembly		1
Remove Engine Weight as Required to Accomplish Repairs		1
After Required Repairs are Completed Lower Airplane per SRM 51-50-4		1
Figure 1 - Support Equipment for Jig Position		2
Figure 2 - Support of Airplane in Nonjig Position		4
Figure 3 - Support Jigs - Fuselage		6
Figure 4 - Support Cradles - Fuselage		8
Figure 5 - Support Jigs and Cradles - Wing and Horizontal Stabilizer		10
Figure 6 - Jack Equipment - Engine Support		12
Figure 7 - Alternative Fuselage Support Equipment		13
Airplane Raising	51-50-2	
Procedure Equipment		1
Prepare Airplane for Raising		1
Raise Airplane		2

BOEING PROPRIETARY - Copyright © - Unpublished Work - See title page for details.

Subject	Subject No.	Page
AIRPLANE LEVELING	51-50-3	
Plumb Bob Level the Airplane		1
Level Airplane for Jig Position		1
Lock All Jacks		2
Bleed All Jacks		3
Attitude of Airplane		
Relevel Airplane as Follows if After Bleeding Jacks the Airplane Attitude is Not Within 0.020 Inches		3
Calculate Eye-Piece Elevation of the Engineers Level		8
Trim Stabilizer		9
Support the Airplane - See 51-50-1, Figure 1		9
Level the Wings		9
Level the Horizontal Stabilizer		10
Alignment Point Elevations for Airplane in Jig Position		11
AIRPLANE LOWERING	51-50-4	
Lower Airplane		1
ALIGNMENT CHECK PROCEDURES	51-60	
General		1
Procure Equipment		1
Prepare Airplane for Raising		1
Raise Airplane		3
Level the Airplane		3
Lock All Jacks		5
Bleed All Jacks		5
Check Attitude of Airplane		6
Relevel Airplane as Follows if After Bleeding Jacks the Airplane Attitude is Not Within Required Tolerance		6
Calculate Eye-Piece Elevation of the Engineers Level		11
Place Floor Mark Labels per Figure 7		11
Place Index Card Under Fuselage Points B, D, and at Nose Landing Gear Oleo Centerline per Figure 7		12
Place and Set Up Theodolite or Engineers Transit		12
Trim Stabilizer		12
Take Elevation Readings		13
Take Fuselage Wing and Horizontal Stabilizer Azimuth Readings		13
Check Main Landing Gear Alignment and Engine Alignment		14
Check Nose Landing Gear Longitudinal Alignment		14
Set Up for Top of Rudder Fairing Azimuth Readings		14
Take Azimuth Readings of Top of Rudder Fairing		14
Take Plumb Bob - Leveling Scale Reading		15
Prepare Airplane for Lowering		15
Lower Airplane		16

Subject	Subject No.	Page
Remove Plumb Bob		16
Remove Jacks and Jack Pads		16
Figure 1 Alignment Check Equipment		17
Figure 2 Jacking Diagram		20
Figure 3 Airplane Leveling Using Plumb Bob		21
Figure 4 Alignment Point Locations		22
Figure 5 Plumb Bob Line Holder at Nose Landing Gear		24
Figure 6 Plumb Bob Line Holder at Main Landing Gear		25
Figure 7 Preparation of Floor Mark Labels and Index Cards		26
Figure 8 Plumb Bob Line Holder Assembly for Alignment Points on Contoured Surface		27
Figure 9 Trammel Assembly		27
Figure 10 Measuring Methods and Details		28
Figure 11 Transit Theodolite Setup		29
Figure 12 Stabilizer Alignment Check		30
Figure 13 Wings and Stabilizer Azimuth Checks		31
Figure 14 Landing Gear and Engine Alignment Check		32
Figure 15 Alignment Points		35
Figure 16 Engine Alignment Point		41
Figure 17 Alignment Data		42
AERODYNAMIC SMOOTHNESS	51-70	
General		1
Joints - Critical Areas		2
Joints - Noncritical Areas		2
Aerodynamic Smoothness Requirements		2
Microshaving of Aluminum Alloy Rivets		2
Figure 1 Aerodynamic Smoothness - Critical Areas		4
Figure 2 Microshaving of Aluminum Alloy Rivets		5
Figure 3 Aerodynamic Smoothness - Fasteners		7
Figure 4 Aerodynamic Smoothness - Waviness		9
Figure 5 Aerodynamic Smoothness - Fuselage		1
Figure 6 Aerodynamic Smoothness - Wings and Empennage		5
Figure 7 Aerodynamic Smoothness - Nacelle and Fairing		17
Figure 8 Aerodynamic Smoothness - Static Ports		18
Figure 9 Aerodynamic Repair Limits Around Pitot-Static Probes		20
SKIN WAVINESS INSPECTION FOR RVSM OPERATION	51-70-3	
Figure 1 Skin Waviness Inspection for RVSM Operation		1
CONTROL SURFACE BALANCING (GLASS FABRIC/METAL CONTROL SURFACES	51-80	
General		1
Special Tools and Equipment		2
Estimation of Repair Weight of Honeycomb Repairs		2
Estimation of Weight Added by Repainting		2
Sign Convention		4
Figure 1 Balancing Equipment		5
Figure 2 Estimated Weight of Honeycomb Repairs		8
Figure 3 Estimated Weight of Finish		11

Subject	Subject No.	Page
AILERON BALANCING PROCEDURES (GLASS FABRIC/METAL AILERON)	51-80-1	
Balancing Requirements		1
Repairs Which Do Not Require Rebalancing		1
Repairs Which May Be Rebalanced Without Aileron Removal		1
Balancing Procedures with Aileron Removed from Airplane		6
Figure 1 Aileron Mounting Points and Weight Location Diagram		8
Figure 2 Aileron Balancing Diagram		9
Figure 3 Aileron Balance Weight		10
Figure 4 Aileron as Weighed Condition		10
Figure 5 Aileron Support During Balancing		11
Figure 6 Aileron Balance Weight Requirements		12
Figure 7 Weight Tolerance Requirements for Balancing Aileron on Airplane		14
AILERON BALANCE PANEL PROCEDURES (GLASS FABRIC/METAL AILERON)	51-80-2	
Weight Requirements		1
Figure 1 Aileron Balance Panel as Weighed Condition		2
AILERON TAB BALANCING PROCEDURES (GLASS FABRIC/METAL AILERON)	51-80-3	
Adjustment of Aileron Balance for Change in Tab Weight		1
Figure 1 Aileron Tab Adjust Weight Requirements		2
Figure 2 Aileron Tab Adjust Weight Location Diagram		3
Figure 3 Aileron Tab As-Weighed Condition		4
ELEVATOR BALANCING PROCEDURES (GLASS FABRIC/METAL ELEVATOR)	51-80-4	
Balancing Requirements		1
Repairs Which Do Not Require Rebalancing		1
Repairs Which May Be Rebalanced Without Removal of Elevator		1
Balancing Procedures With Elevator Removed From Airplane		6
Figure 1 Elevator Mounting Points and Balancing Weights Location Diagram		8
Figure 2 Elevator Balancing Diagram		10
Figure 3 Elevator Balance Weight		11
Figure 4 Elevator as Weighed Condition		11
Figure 5 Elevator Support During Balancing		12
Figure 6 Elevator Balance Weight Requirements		13
Figure 7 Weight Tolerance Requirements for Balancing Elevator on Airplane		18
Figure 8 Maximum Size of Skin Repairs		19
ELEVATOR BALANCE PANEL PROCEDURES (GLASS FABRIC/METAL ELEVATOR)	51-80-5	
Weight Requirements		1
Figure 1 Elevator Balance Panels as Weighed Condition		2

Subject	Subject No.	Page
ELEVATOR TAB BALANCING PROCEDURES (GLASS FABRIC/METAL ELEVATOR)	51-80-6	
Adjustment of Elevator Balance for Change in Tab Weight		1
Figure 1 Elevator Tab Adjust Weights Location Diagram		2
Figure 2 Elevator Tab Adjust Weight Requirements		3
Figure 3 Elevator Tab Adjust Weight		4
Figure 4 Elevator Tab as Weighed Condition		4
RUDDER BALANCING PROCEDURES (GLASS FABRIC/METAL RUDDER)	51-80-7	
Balancing Requirements		1
Repairs Which Do Not Require Rebalancing		1
Repairs Which May Be Rebalanced Without Removal of Rudder		1
Balancing Procedure With Rudder Removed From Airplane		7
Alternate Balancing Procedure with Rudder Removed From Airplane		9
Figure 1 Rudder Weight and Tool Hole Location Diagram		11
Figure 2 Rudder Repair Moment Arm Diagram		14
Figure 3 Rudder Balance Weight		15
Figure 4 Balance Weight Position Number and Moment Requirements		16
Figure 5 Rudder as Weighed Condition		17
Figure 6 Rudder Support During Balancing		18
Figure 7 Rudder Mounting Point Location Diagram		19
Figure 8 Rudder Balance Weight Requirements		20
Figure 9 Weight Tolerance Requirements for Balancing Rudder on Airplane		23
Figure 10 Maximum Size of Skin Repairs		24
GRAPHITE COMPOSITE CONTROL SURFACE BALANCING	51-81	
General		1
Measuring Accuracy		2
Estimation of Material Weight for Control Surface Repair		3
Estimation of Weight and Moments Added by Repainting		3
Tab Adjust Weight System		8
Special Tools and Equipment		9
Sign Convention		9
Figure 1 Sign Convention		10
Figure 2 Balancing Equipment		11
Figure 3 Control Surface Material Weight		15
Figure 4 Definitions of Terms		18

Subject	Subject No.	Page
GRAPHITE COMPOSITE AILERON BALANCE PROCEDURE.	51-81-1	
Aileron Balance Requirements - General.		1
Rework Operations Which Do Not Require Rebalancing.		1
Rebalancing a Reworked Aileron Without the Balance Jig. . . .		2
Sample Calculations - Repairs Which May be Rebalanced Without the Balance Jig.		5
Figure 1 Aileron Balance Tables.		6
Figure 2 Aileron Balancing Diagram		8
Figure 3 Aileron Mounting Points and Weight Location Diagram.		9
Figure 4 Repair (TYP) - Repair of Damage to One Skin of Honeycomb Panel.		10
Balancing Procedures with Aileron on the Balance Jig.		18
Figure 5 Aileron Support During Balancing.		21
Figure 6 Configuration of Aileron at Time of Balancing on the Balance Jig.		22
Figure 7 Weight Tolerance Requirements for Balancing Aileron on Airplane.		23
Figure 8 Aileron Balance Adjust Weights.		24
WEIGHT CONTROL PROCEDURE FOR BALANCE PANEL ON GRAPHITE COMPOSITE AILERON.	51-81-2	
Weight Requirements		1
Figure 1 Aileron Balance Panel As-Weighted Condition. . . .		2
BALANCE PROCEDURE FOR TAB ON GRAPHITE COMPOSITE AILERON	51-81-3	
GRAPHITE COMPOSITE ELEVATOR BALANCE PROCEDURE.	51-81-4	
Elevator Balance Requirements - General		1
Rework Operations That Do Not Require Rebalancing		2
Rebalancing a Reworked Elevator Without the Balance Jig . . .		3
Rebalancing a Reworked Elevator On the Balance Jig.		3
Sample Calculations - Rebalancing an Elevator Without the Balance Jig.		4
Sample Calculation - Rebalancing an Elevator On the Balance Jig.		11
Figure 1 Rebalance a Reworked Elevator Without the Balance Jig.		15
Figure 2 Rebalance a Reworked Elevator On the Balance Jig.		18
Figure 3 Elevator Support During Balancing.		20
Figure 4 Elevator Mounting Points and Balance Weights Location Diagram		22
Figure 5 Configuration of Elevator at Time of Balancing on the Balance Jig		24
Figure 6 Elevator Balancing Diagram.		25
Figure 7 Weight Tolerance Requirements for Balancing Elevator Off the Jig		26
Figure 8 Elevator Balance Adjust Weight.		27
Figure 9 Repair (Typ) - Repair of Damage, Greater than 0.50-inch Diameter, to One Skin and Honeycomb Cure. . .		28

Subject	Subject No.	Page
WEIGHT CONTROL PROCEDURE FOR BALANCE PANEL ON GRAPHITE COMPOSITE ELEVATOR	51-81-5	
Weight Requirement		1
Elevator Balance Panels As-Weighted Condition		2
BALANCE PROCEDURE FOR TAB ON GRAPHITE COMPOSITE ELEVATOR	51-81-6	
Adjustment of Elevator Balance for Change in Tab Weight		1
Figure 1 Elevator Tab Adjust Weight Requirements		2
Figure 2 Elevator Tab Adjust Weights Location Diagram		3
Figure 3 Elevator Tab As-Weighted Condition		4
GRAPHITE COMPOSITE RUDDER BALANCE PROCEDURE	51-81-7	
Rudder Balance Requirements - General		1
Rework Operation Which Do Not Require Rebalancing		2
Rebalancing a Reworked Rudder Without the Balance Jig		2
Sample Calculation - A Repair Which May be Rebalanced Without the Balance Jig		3
Sample Calculation - A Repair Which May Be Rebalanced On the Balance Jig		7
Figure 1 Rebalancing a Reworked Rudder Without the Balance Jig		9
Figure 2 Rebalancing a Reworked Rudder on the Balance Jig		12
Figure 3 Rudder Repair Moment Arm Diagram		13
Figure 4 Rudder Balance Arm and Adjust Weight		14
Figure 5 Configuration of Rudder at Time of Balancing On the Balance Jig		16
Figure 6 Rudder Mounting Point Location Diagram		17
Figure 7 Rudder Support During Balancing		18
Figure 8 Weight Tolerance Requirements for Balancing Rudder on Airplane		20

STRUCTURES - GENERAL

1. General

A. This chapter describes general repair practices, materials and typical repairs which are applicable throughout the chapters of the manual.

BS — BODY STATION. DISTANCE MEASURED PARALLEL TO BODY CENTERLINE TO A PLANE PERPENDICULAR TO BODY CENTERLINE FROM A POINT 130 INCHES FORWARD OF THE NOSE.

BBL OR BL — BODY (FUSELAGE) BUTTOCK LINE. DISTANCE IN A HORIZONTAL PLANE MEASURED FROM A VERTICAL CENTERLINE.

EM — EDGE MARGIN.

FSS — FRONT SPAR STATION.

HT — HEAT TREAT.

LE — LEADING EDGE.

MAX — MAXIMUM.

MIN — MINIMUM.

NAC WL — NACELLE WATER LINE. NACELLE WATER LINE 100.00 IS DEFINED AS A LINE IN A PLANE TILTED UPWARD AND FORWARD WITH RESPECT TO THE PLANE OF BODY WATER LINE PLANE 156.55 WHICH INTERSECTS BODY STATION 705.79 AND NACELLE STATION 221.12.

RSS — REAR SPAR STATION.

TE — TRAILING EDGE.

TYP — TYPICAL.

WBL — WING BUTTOCK LINE. A PLANE NORMAL TO WING CHORD PLANE AND PARALLEL TO BODY CENTERLINE. IT IS MEASURED FROM INTERSECTION OF WING CHORD PLANE AND BL 0.

WL — WATERLINE DISTANCE MEASURED PERPENDICULAR FROM A HORIZONTAL PLANE LOCATED 148.5 INCHES BELOW BOTTOM OF BODY.

WS — WING STATION. A PLANE PERPENDICULAR TO WING CHORD PLANE AND REAR SPAR MEASURED FROM INTERSECTION OF LEADING EDGE AND BL 0.

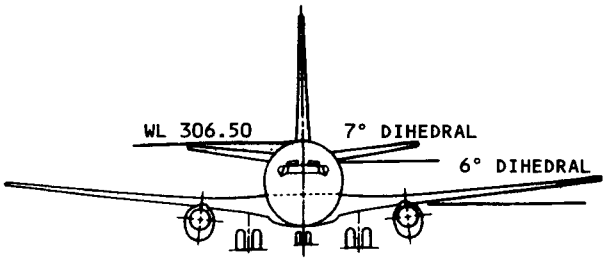

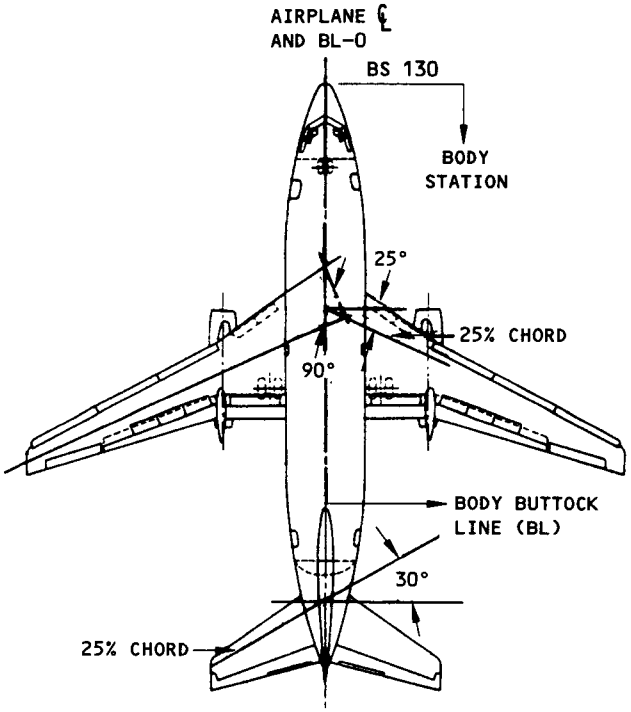

Abbreviations
Figure 1

BOEING PROPRIETARY - Copyright © - Unpublished Work - See title page for details.

IDENTI-FICATION NUMBER	AIRPLANE SECTION NUMBER	DRAWING TITLE	BOEING DRAWING NUMBER
1	11	WING STUB ASSY	65-73711
2	12	WING ASSY	65-73712
3	14	LEADING EDGE FLAPS AND SLATS INSTL	65-73714
4	18	DOOR INSTL - MAIN GEAR	65-73718
5	19	WING TIP INSTL	65-73719
6	30	OUTBOARD SPOILER INSTL	65-73730
7	31	INBOARD FLAP INSTL	65-73731
8	32	OUTBOARD FLAP INSTL	65-73732
9	34	OUTBOARD AILERON INSTL	65-73734
10	35	INBOARD SPOILER INSTL	65-73735
11	41	BODY INSTL	65-73741
12	43	BODY INSTL	65-73743
13	46	BODY INSTL	65-73746
14	48	BODY INSTL	65-73748
15	61	MAIN LANDING GEAR INSTL	65-73761
16	62	NOSE LANDING GEAR INSTL	65-73762
17	70	STRUT INSTL - ENGINE	65-79413
18	71	COWL INSTL - ENGINE	65-73771
19	71	POWER PLANT INSTL	65-73768
20	82	STABILIZER ASSY	65-73782
21	83	STABILIZER LEADING EDGE ASSY	65-73783
22	84	ELEVATOR ASSY	65-73784
23	85	DORSAL FIN	65-73785
24	86	FIN ASSY	65-73786
25	87	FIN LEADING EDGE ASSY	65-73787
26	88	RUDDER AND BALANCE ASSY	65-73788
27	86	FIN TIP ASSY	65-73789
28	93	STABILIZER TIP INSTL	65-73793
29	71	TAIL CONE ASSY	65-56610
30	78	THRUST REVERSER AND TAIL PIPE INSTL	65-70950
31	41	NOSE LANDING GEAR DOOR	65-50520
32	79	FAIRING - APU EXHAUST DUCT	65-62593
33	71	NOSE COWL INSTALLATION	65-55750

Major Assembly Breakdown
Figure 1 (Sheet 1)

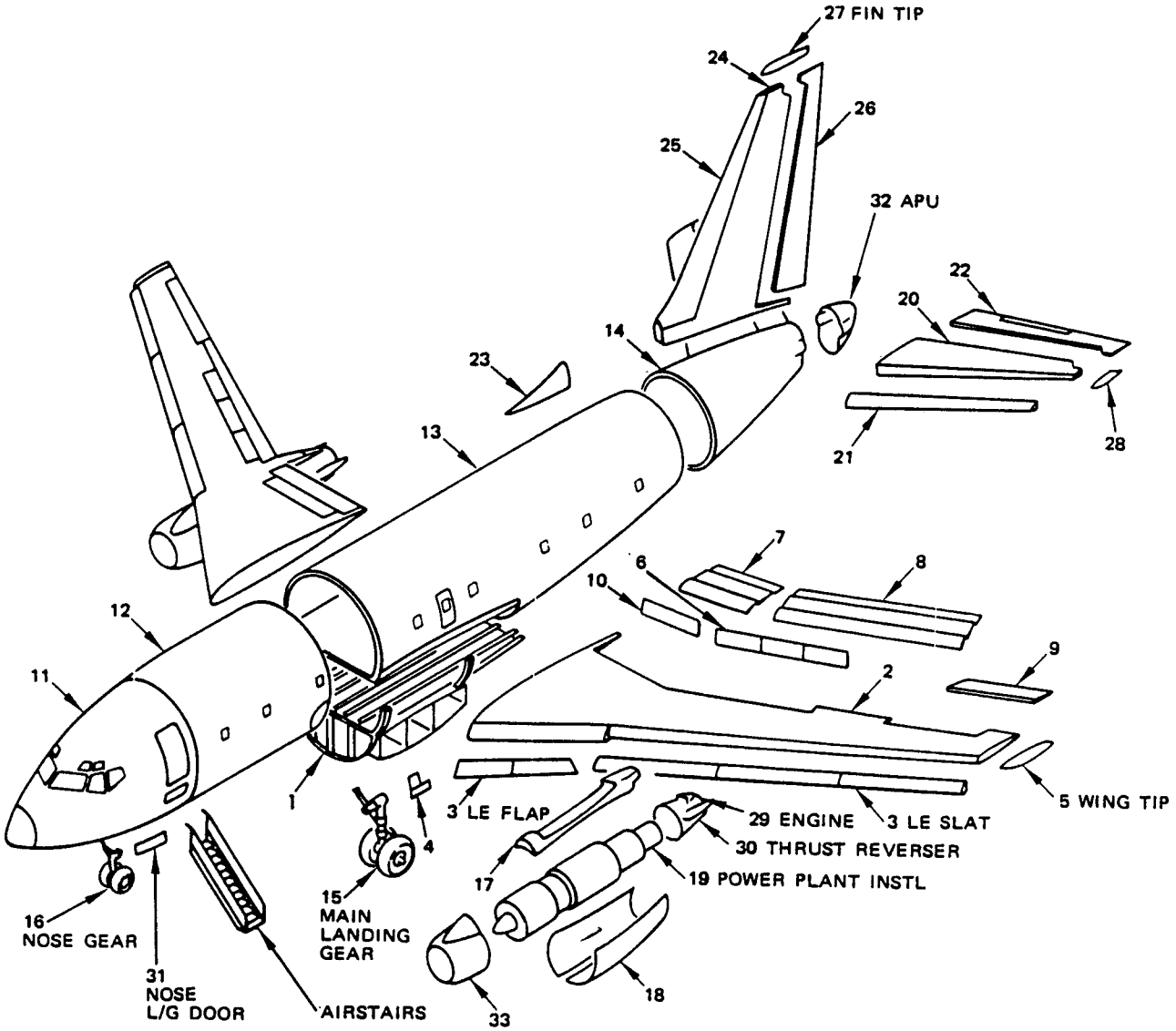

Major Assembly Breakdown
Figure 1 (Sheet 2)

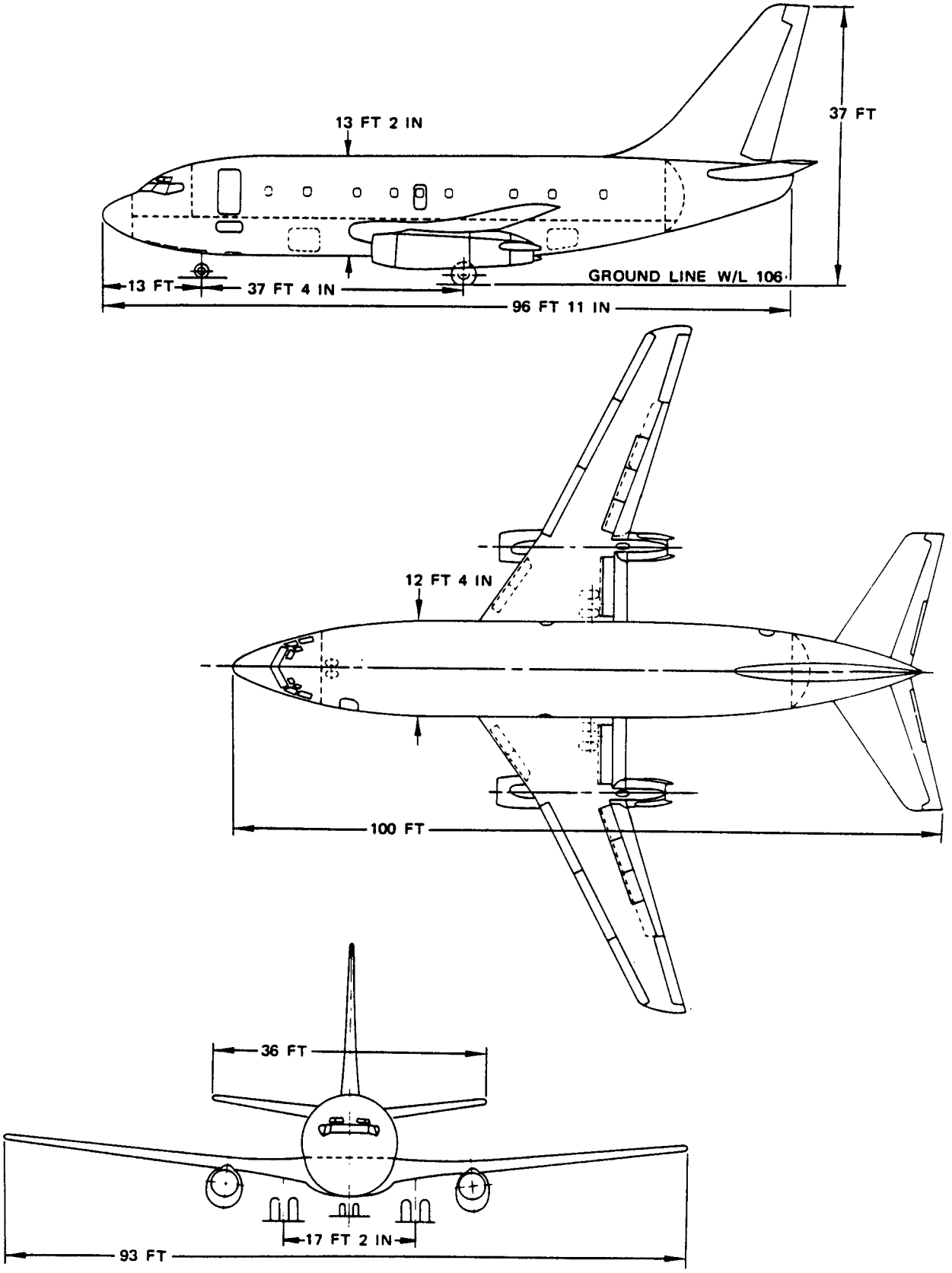

Principal Dimensions
Figure 1

NOTES

- AREAS AS INDICATED, ARE CLASSED AS SECONDARY STRUCTURE. THESE COMPONENTS, THOUGH NOT PRIMARY LOAD CARRYING UNITS, ARE SUBJECTED TO AERODYNAMIC LOADS AND COMPLETE FAILURE. SUCH FAILURES, WHICH MAY CAUSE POSSIBLE DAMAGE TO PRIMARY STRUCTURE AND ENGINES OR ADVERSELY AFFECT AERODYNAMIC CHARACTERISTICS AND/OR SURFACE STIFFNESS MUST BE CONSIDERED. SEE NOTES A AND B ALSO.

- OTHER AREAS ARE CONSIDERED AS PRIMARY STRUCTURE.

  WITHIN PRIMARY STRUCTURE ARE PRINCIPAL STRUCTURAL ELEMENTS (SEE FIGURE 2, TABLE I). PRINCIPAL STRUCTURAL ELEMENTS (PSE'S) ARE THOSE WHICH CONTRIBUTE SIGNIFICANTLY TO CARRYING FLIGHT, GROUND AND PRESSURIZATION LOADS.

A TRAILING EDGE

1. PRIMARY STRUCTURE IN THIS AREA, IS DEFINED AS THAT STRUCTURE WHICH GIVES SUPPORT TO THE FLAPS, AILERONS AND SPOILERS; LANDING GEAR BEAMS AND THEIR SUPPORTS.

2. SECONDARY STRUCTURE IN THIS AREA IS LIMITED TO THE UPPER AND LOWER PANELS.

B LEADING EDGE

1. PRIMARY STRUCTURE IS DEFINED AS THAT STRUCTURE WHICH GIVES SUPPORT TO LEADING EDGE SLATS AND KREUGER FLAPS.

Structural Classification Diagram
Figure 1 (Sheet 1)

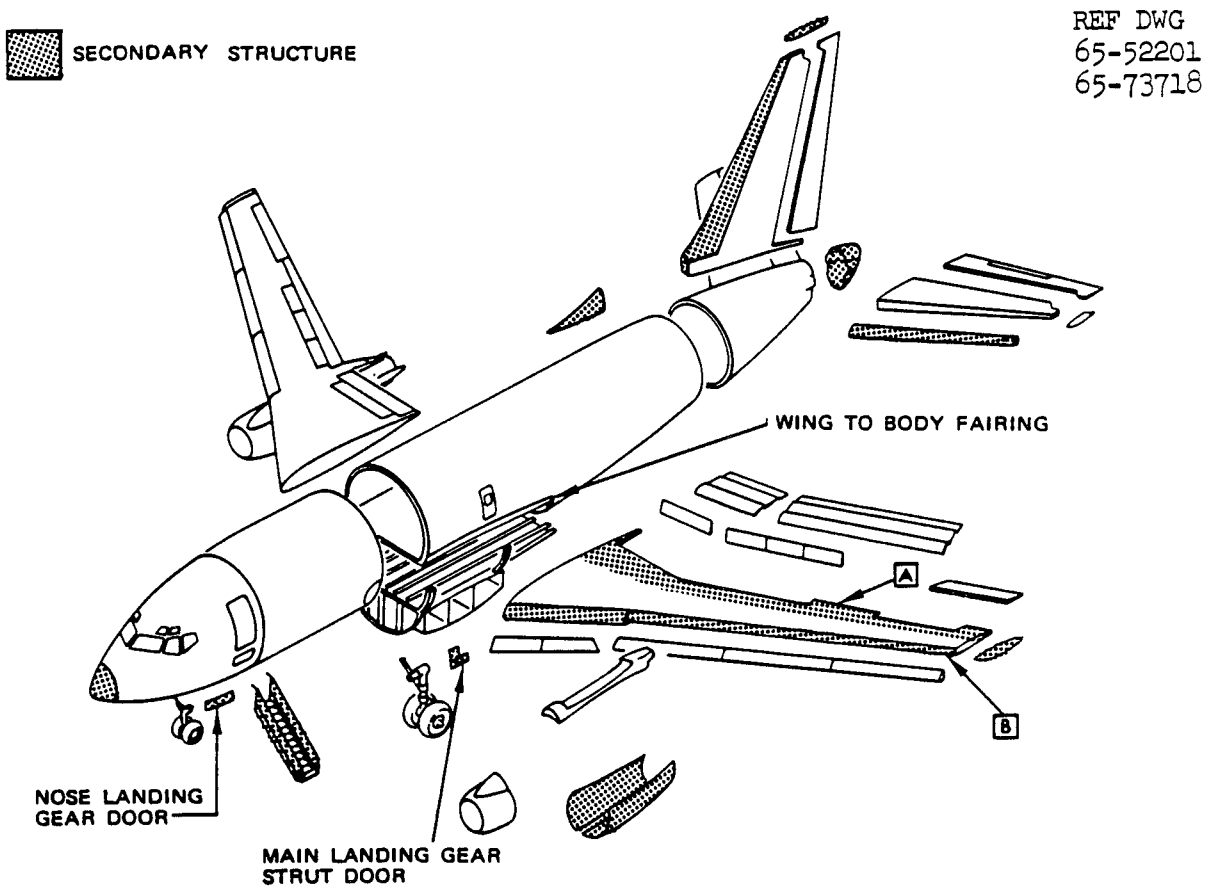

Structural Classification Diagram
Figure 1 (Sheet 2)

STRUCTURAL AREA	STRUCTURAL ELEMENT
FUSELAGE	FUSELAGE UPPER LOBE SKIN AND STRINGERS FUSELAGE LOWER LOBE SKIN AND STRINGERS FUSELAGE CIRCUMFERENTIAL SPLICES FUSELAGE LAP SPLICES TYPICAL FRAMES SKIN AT CORNERS OF MISC. ACCESS DOOR CUTOUTS STRINGER/FRAME ATTACHMENTS BULKHEAD BS 178 (FORWARD PRESSURE) FUSELAGE BS 227.8 BULKHEAD FUSELAGE BS 259.5 BULKHEAD FUSELAGE BS 294.5 BULKHEAD LOWER LOBE FRAMES BS 360 TO BS 520 FUSELAGE BS 540 BULKHEAD FUSELAGE BS 664 BULKHEAD FUSELAGE BS 685 BULKHEAD FUSELAGE BS 706 BULKHEAD FUSELAGE BS 727 BULKHEAD LOWER LOBE FRAMES BS 727A TO BS 1006 FUSELAGE BS 1016 BULKHEAD FUSELAGE BS 1088 BULKHEAD FUSELAGE BS 1156 BULKHEAD SECTION 48 TORQUE BOX FLOOR BEAM STRUCTURE HORIZONTAL PRESSURE DECK OVERWING STUB FRAMES STRINGER 18A SKIN BS 664 AT STRINGER 18A DELTA BEAM - UNDER WING FUSELAGE FLOOR BEAMS OVER MAIN LANDING GEAR WHEEL WELL FUSELAGE KEEL BEAM CREW WINDOW CABIN STRUCTURE WINDOW FORGINGS SKIN AT CORNERS OF WINDOW FORGINGS FORWARD ENTRY DOOR AFT ENTRY DOOR EMERGENCY EXIT DOORS FORWARD GALLEY DOOR AFT SERVICE DOOR ELECTRONICS BAY ACCESS DOOR FUSELAGE UPPER DECK CARGO DOOR FUSELAGE LOWER LOBE CARGO COMPARTMENT DOORS FORWARD ACCESS DOOR CUTOUT ELECTRONICS ACCESS DOOR CUTOUT FUSELAGE LOWER LOBE CARGO COMPARTMENT DOOR CUTOUTS FUSELAGE UPPER DECK CARGO DOOR CUTOUT FORWARD ENTRY DOOR CUTOUT AIRSTAIR DOOR CUTOUT FORWARD GALLEY DOOR CUTOUT AFT ENTRY DOOR CUTOUT AFT GALLEY DOOR CUTOUT EMERGENCY EXIT DOOR CUTOUT NOSE LANDING GEAR WHEEL WELL

TABLE I

Principal Structural Elements
Figure 2 (Sheet 1)

STRUCTURAL AREA	STRUCTURAL ELEMENT
EMPENNAGE	FIN FRONT SPAR CHORDS, STIFFENERS, AND WEB FRONT SPAR FORGED TRUSS FITTING FRONT SPAR TERMINAL FITTING REAR SPAR CHORDS, FAILSAFE CHORDS, STIFFENERS, AND WEB REAR SPAR TERMINAL FITTING REAR SPAR FAILSAFE TERMINAL FITTING INSPAR SKINS CLOSURE RIB TYPICAL INSPAR RIB STABILIZER CENTER SECTION FRONT SPAR FORGING CENTER SECTION REAR SPAR CENTER SECTION PRIMARY BEAMS CENTER SECTION THRUST BEAMS CENTER SECTION AUXILIARY BEAM CENTER SECTION JACKSCREW SUPPORT FITTING CENTER SECTION THRUST BRACES CENTER SECTION HINGE SUPPORT PLATES FRONT SPAR CHORDS, STIFFENERS, AND WEB REAR SPAR CHORDS, FAILSAFE CHORD, STIFFENERS, AND WEB UPPER AND LOWER INSPAR SKIN CLOSURE RIB INSPAR HINGE RIBS TYPICAL INSPAR RIBS ATTACHMENT POINTS FIN-TO-BODY BOLTS STABILIZER SPAR-TO-CENTER SECION BOLTS CENTER SECTION-TO-BODY HINGE PINS CENTER SECTION HINGE HOUSING BEARING JACKSCREW SUPPORT FITTING-TO-JACKSCREW GIMBLE
WING	CENTER SECTION FRONT SPAR CHORDS, WEB, AND STIFFENERS CENTER SECTION REAR SPAR CHORDS, WEB, AND STIFFENERS CENTER SECTION LOWER PANEL SKIN AND STRINGERS CENTER SECTION UPPER PANEL SKIN AND STRINGERS CENTER SECTION UPPER AND LOWER SKIN SPLICE STRINGERS CENTER SECTION SPANWISE BEAMS CENTER SECTION LOWER BEAMS - BBL 40.875, LEFT AND RIGHT LOWER SURFACE BBL 70.85 SPLICE UPPER SURFACE BBL 70.85 SPLICE AND WING-TO-BODY JOINT PLUS CHORD BBL 70.85 RIB CHORDS, WEB, STIFFENERS, AND TERMINAL FITTINGS REAR SPAR CHORDS, WEB, AND STIFFENERS FRONT SPAR CHORDS, WEB, AND STIFFENERS LOWER PANEL SKIN AND STRINGERS UPPER PANEL SKIN AND STRINGERS UPPER AND LOWER SKIN SPLICE STRINGERS LOWER PANEL CUTOUTS TYPICAL RIBS SHEAR TIED RIBS MAIN LANDING GEAR SUPPORT STRUCTURE TRAILING EDGE FLAPS - MAIN BOX TRAILING EDGE FLAP TRACKS AND SUPPORT STRUCTURE TRAILING EDGE FLAP MAIN CARRIAGES OVERWING FLOOR BEAMS ENGINE SUPPORT STRUCTURE WHEEL WELL PRESSURE DECK

TABLE I (CONT)

Principal Structural Elements
Figure 2 (Sheet 2)

333427

STRUCTURAL AREA	STRUCTURAL ELEMENT
POWER PLANT	FRONT ENGINE MOUNT INCLUDING: ATTACHMENT TO FRONT SPAR THRUST LINKS CONE BOLTS AND ISOLATORS REAR ENGINE MOUNT INCLUDING: ISOLATOR HOUSING ATTACHMENT TO FLAPTRACK CONE BOLT AND ISOLATOR
LANDING GEAR	MAIN LANDING GEAR OUTER CYLINDER INNER CYLINDER TRUNNION LINK TRUNNION PIN UPPER AND LOWER DRAG BRACE PINS, DRAG BRACE FORWARD TRUNNION FUSE BOLT TORSION LINKS PINS, TORSION LINK UPPER AND LOWER SIDE STRUT PINS, SIDE STRUT REACTION LINK PINS, REACTION LINK UPPER AND LOWER DOWNLOCK LINK PINS, DOWNLOCK LINK ORIFICE SUPPORT TUBE ORIFICE PLATE METERING PIN GLAND NUT NOSE LANDING GEAR OUTER CYLINDER INNER CYLINDER TRUNNION PINS, SHOCK STRUT TORSION LINKS PINS, TORSION LINK STEERING COLLAR PINS, STEERING COLLAR STEERING SUPPORT PLATES PIN, SUPPORT PLATE LOCK LINK ASSY. UPPER AND LOWER DRAG BRACE PINS, DRAG BRACE UPPER AND LOWER SUPPORT TUBE ORIFICE PLATE METERING PIN GLAND NUT

TABLE I (CONT)

Principal Structural Elements
Figure 2 (Sheet 3)

BOEING PROPRIETARY - Copyright © - Unpublished Work - See title page for details.

NOTES

- THIS FIGURE GIVES A LIST OF THE STRUCTURAL SIGNIFICANT ITEMS (SSI) SPECIFIED BY THE SUPPLEMENTAL STRUCTURAL INSPECTION DOCUMENT (SSID), D6-37089, FOR THE EMPENNAGE, FUSELAGE AND WING SECTIONS.
- THE AIRCRAFT SSI MAPS ARE INCLUDED IN THIS FIGURE TO SHOW THE AREAS WHERE A REPAIR CAN HAVE AN EFFECT ON THE INSPECTIONS REQUIRED BY THE SSID. IN ADDITION TO THE SSI MAPS, DETAILS ARE INCLUDED FOR ITEMS WHERE MORE DATA IS NECESSARY TO IDENTIFY THE INSPECTION AREA. REFER TO THE SSID (D6-37089) FOR MORE INSPECTION DATA FOR EACH SSI.
- THE SSI NUMBERS ARE NOT CONTINUOUSLY CONSECUTIVE BECAUSE SOME ITEMS WERE REMOVED FROM THE PROGRAM OR COMBINED WITH OTHER ITEMS AFTER THE NUMBER SEQUENCE WAS GIVEN.

[A] THIS SSI IS APPLICABLE TO ALL 737-100 SERIES AIRCRAFT.

[B] THIS SSI IS APPLICABLE TO ALL 737-200 SERIES AIRCRAFT THAT INCLUDES -200 HGW.

SSI TABLES INDEX		
STRUCTURE	TABLE NO.	DETAIL NO.'S
EMPENNAGE SSI's	II	I AND II
FUSELAGE SSI's	III	VIII THRU XIII
WING SSI's	IV	XXIII AND XXIV
SSID AREAS AFFECTED BY SRM REPAIRS	V	

TABLE I

[C] THIS SSI IS APPLICABLE TO ALL 737-200C SERIES AIRCRAFT.

[D] THIS SSI IS APPLICABLE TO ALL 737-100/200 SERIES AIRCRAFT WITHOUT AIRSTAIRS.

[E] THIS SSI IS APPLICABLE TO ALL 737-100/200 SERIES AIRCRAFT WITH AIRSTAIRS.

[F] THIS SSI IS APPLICABLE TO ALL 737-200 HIGH GROSS WEIGHT (HGW) AIRCRAFT.

[G] THIS SSI IS APPLICABLE TO ALL 737-100/200 SERIES AIRCRAFT WITH LINE NUMBERS 1 THRU 291.

[H] THIS SSI IS APPLICABLE TO ALL 737-100/200 SERIES AIRCRAFT WITH LINE NUMBERS 1 THRU 32.

[I] THIS SSI IS APPLICABLE TO ALL 737-100/200 SERIES AIRCRAFT WITH LINE NUMBER 33 AND ON.

[J] THIS SSI IS APPLICABLE TO ALL 737-100/200 SERIES AIRCRAFT AT 7079 FORGING LOCATIONS.

[K] THIS SSI IS APPLICABLE TO ALL 737-100/200 SERIES AIRCRAFT AT 7075 FORGING LOCATIONS.

[L] ALL ITEMS APPLY TO LEFT AND RIGHT SIDES.

[M] ALL ITEMS ARE APPLICABLE TO LEFT AND RIGHT SIDES EXCEPT FOR DOORS AND CUTOUTS.

[N] THIS SSI IS APPLICABLE TO ALL 737-100/200 SERIES AIRCRAFT WITH LINE NUMBERS 236 THRU 291.

[O] THIS SSI IS APPLICABLE TO ALL 737-200 SERIES AIRCRAFT EXCEPT -200 HGW.

[P] REPAIRS THAT AFFECT AN SSI MUST BE RECORDED IN ACCORDANCE WITH 14 CFR 91.417(a)(2)(v) OR 14 CFR 121.380(a)(2)(vi).

[Q] SRM REPAIRS IN SSID AREAS REQUIRE A DAMAGE TOLERANCE ASSESSMENT IN ACCORDANCE WITH AD 98-11-04 R1. HOWEVER, INSPECTION METHODS AND INTERVALS DO NOT NEED TO BE DETERMINED UNTIL THE NOTED THRESHOLD IS REACHED. THIS APPROACH IS AN ALTERNATIVE METHOD OF COMPLIANCE TO THE REQUIREMENTS OF PARAGRAPH (g) OF AD 98-11-04 R1, AND ONLY APPLIES TO THOSE REPAIRS THAT CONFORM TO THE SRM SECTIONS SPECIFIED IN CHAPTERS 52, 53, 55, AND 57.

[R] THE THRESHOLD STARTS FROM THE TIME THE REPAIR IS INSTALLED; HOWEVER, IT DOES NOT SUPERSEDE ANY OTHER MANDATED THRESHOLD.

[S] FOR STRUCTURE WITHOUT COLD WORKED FASTENER HOLES

[T] FOR STRUCTURE WITH COLD WORKED FASTENER HOLES

[U] THE THRESHOLD STARTS FROM THE TIME THE AIRPLANE WAS DELIVERED; HOWEVER, IT DOES NOT SUPERSEDE ANY OTHER MANDATED THRESHOLD.

Structural Significant Items
Figure 3 (Sheet 1)

BOEING PROPRIETARY - Copyright © - Unpublished Work - See title page for details.

SSI NUMBER	TITLE	APPLICABILITY
E-1	FIN FRONT SPAR CHORD, WEB AND SKIN, FS 46.1 TO FS 50.0	A B
E-2	FIN FRONT SPAR LOWER FORGING, BS 1016	A B
E-3	FIN REAR SPAR FORGING LUGS, BS 1088.2	A B
E-4	FIN REAR SPAR CHORDS, WEB AND SKIN, FS 91.0 TO FS 232.4	A B
E-5	FIN REAR SPAR FORGING JOINT AT CHORD, FS 59	A B
E-6	FIN REAR SPAR CHORD JOINT AT FORGING, FS 58.68 TO FS 68	A B
E-7	FIN CLOSURE RIB, BS 1016 TO BS 1088	A B
E-14	HORIZONTAL STABILIZER CENTER SECTION REAR SPAR UPPER CHORD AND WEB, BL 0.0 TO BL 21.0 (LEFT AND RIGHT)	A B
E-16	HORIZONTAL STABILIZER CENTER SECTION HINGE PINS, BS 1154	A B
E-17	HORIZONTAL STABILIZER REAR SPAR UPPER CHORD AND SKIN, TERMINAL PIN TO STAB STA 163	A B
E-18	HORIZONTAL STABILIZER FRONT SPAR UPPER CHORD AND ADJACENT SKIN, STAB STA 57.93 TO STA 163	A B
E-19	HORIZONTAL STABILIZER REAR SPAR UPPER TERMINAL FITTING LUGS	A B
E-20A	HORIZONTAL STABILIZER CENTER SECTION HINGE HOUSING, REAR SPAR BS 1154	J
E-20B	HORIZONTAL STABILIZER CENTER SECTION HINGE HOUSING, REAR SPAR BS 1154	K
E-21A	HORIZONTAL STABILIZER FRONT SPAR TERMINAL FITTING CENTER SECTION CLEVIS LUGS	J
E-21B	HORIZONTAL STABILIZER FRONT SPAR TERMINAL FITTING OUTBOARD SECTION LUG	A B
E-21C	HORIZONTAL STABILIZER FRONT SPAR TERMINAL FITTING CENTER SECTION CLEVIS LUGS	K
E-29	HORIZONTAL STABILIZER CENTER SECTION JACKSCREW SUPPORT FITTING	A B

EMPENNAGE STRUCTURE L
TABLE II

Structural Significant Items
Figure 3 (Sheet 2)

BOEING PROPRIETARY - Copyright © - Unpublished Work - See title page for details.

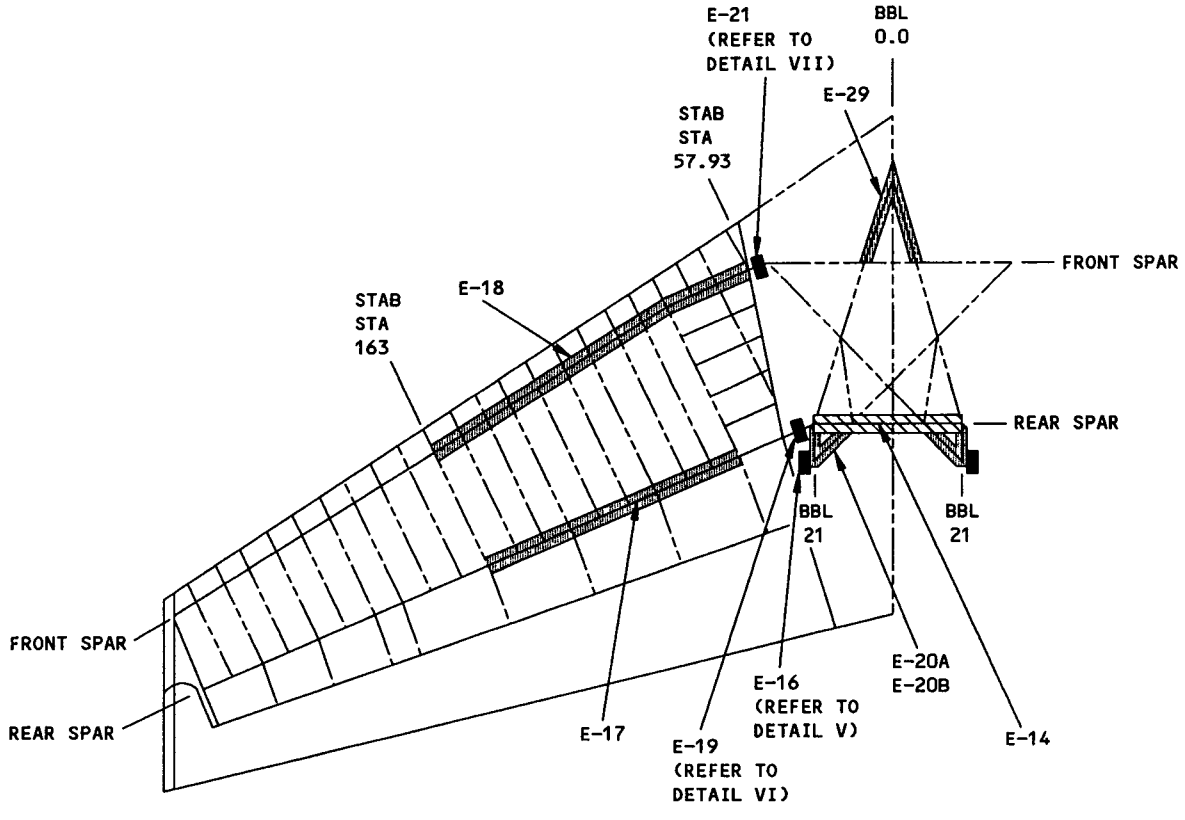

LEFT SIDE IS SHOWN, RIGHT SIDE IS OPPOSITE
EMPENNAGE STRUCTURE

DETAIL I

Structural Significant Items
Figure 3 (Sheet 3)

BOEING PROPRIETARY - Copyright © - Unpublished Work - See title page for details.

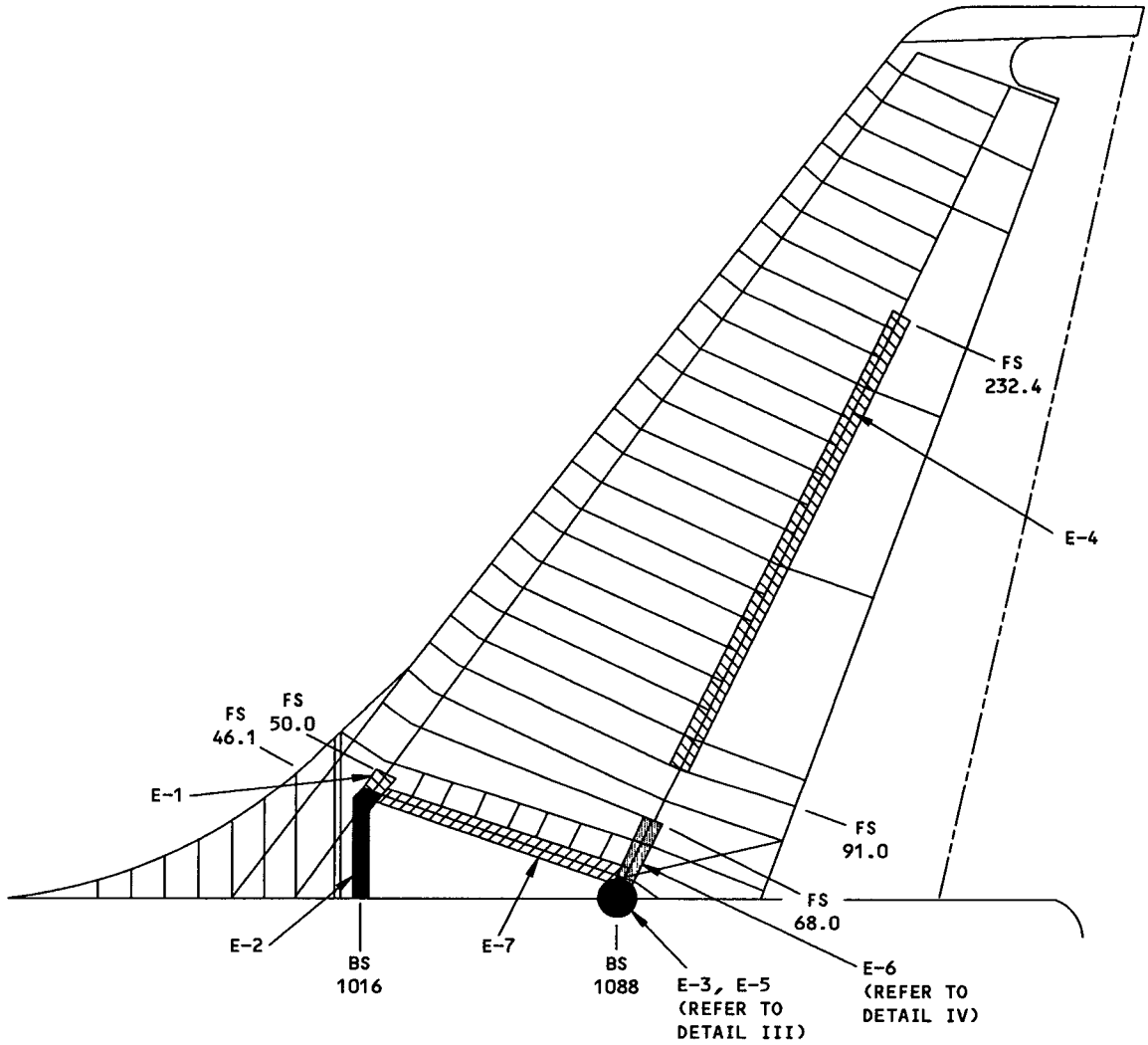

LEFT SIDE IS SHOWN, RIGHT SIDE IS OPPOSITE
EMPENNAGE STRUCTURE
DETAIL II

Structural Significant Items
Figure 3 (Sheet 4)

BOEING PROPRIETARY - Copyright © - Unpublished Work - See title page for details.

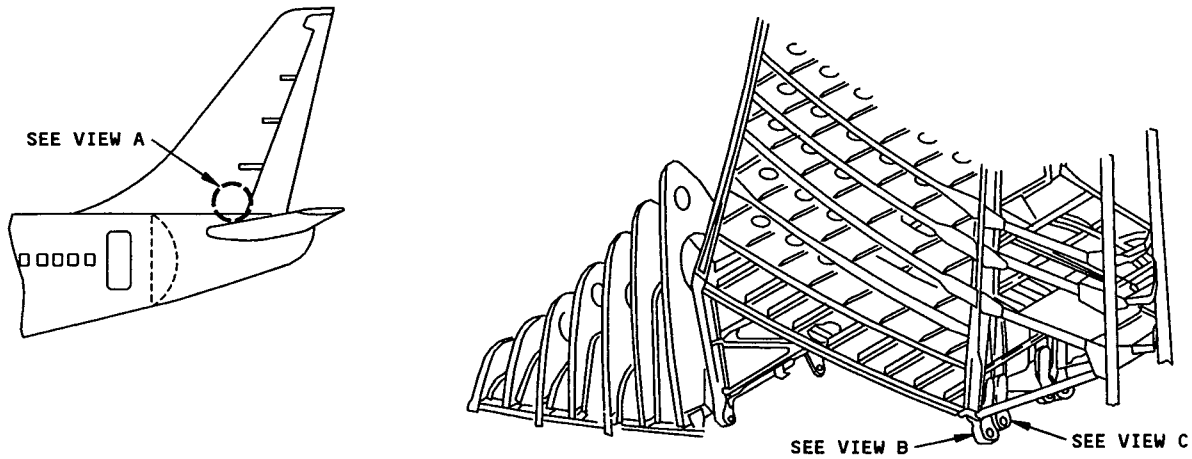

VIEW A

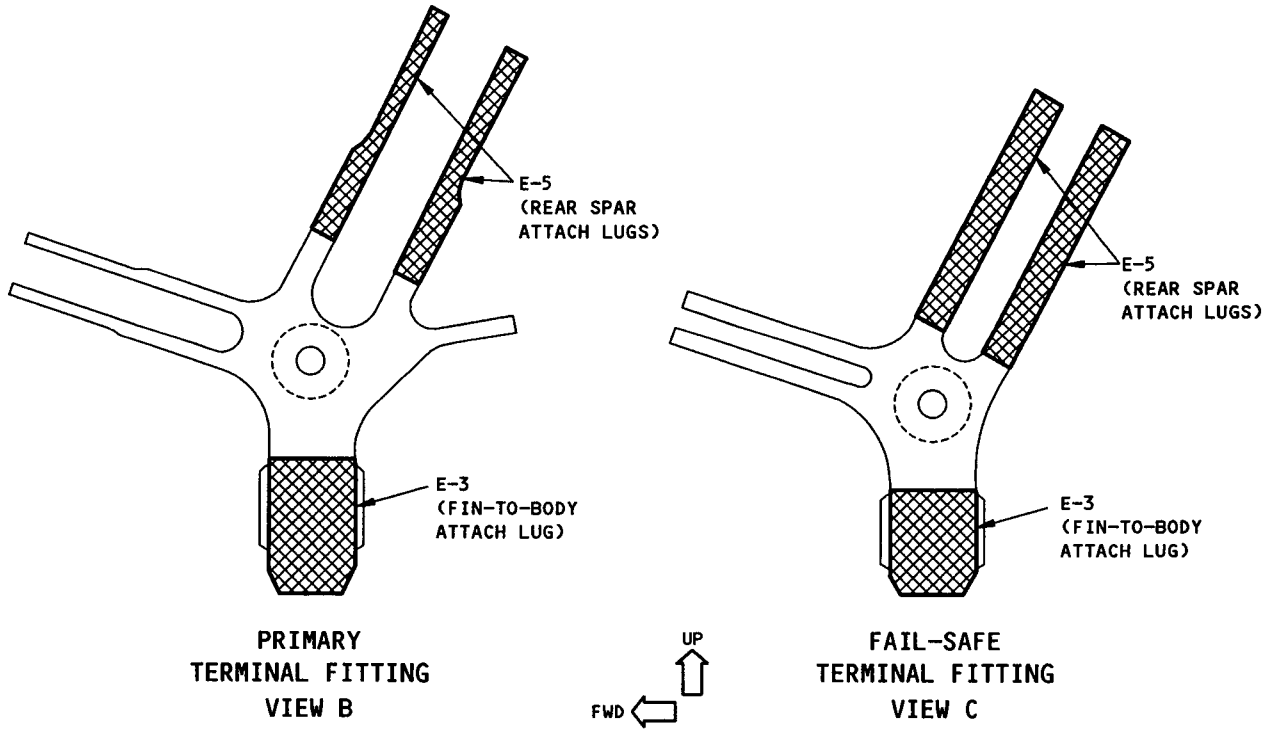

PRIMARY
TERMINAL FITTING
VIEW B

FAIL-SAFE
TERMINAL FITTING
VIEW C

NOTE:

LOCATION OF SSI

E-3 (FIN REAR SPAR FORGING LUGS) AND
E-5 (FIN REAR SPAR FORGING JOINT AT CHORD)
DETAIL III

Structural Significant Items
Figure 3 (Sheet 5)

BOEING PROPRIETARY - Copyright © - Unpublished Work - See title page for details.

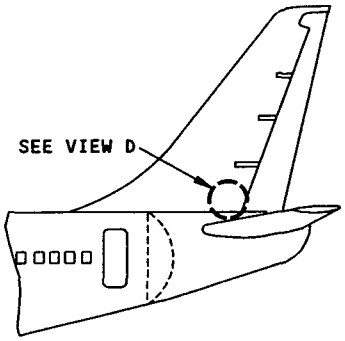

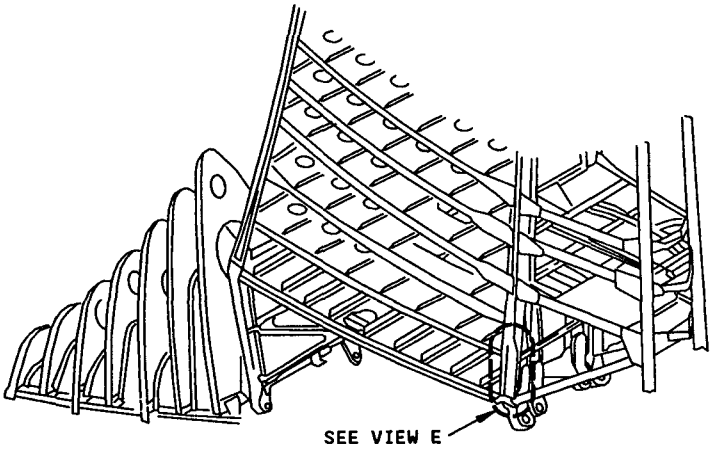

VIEW D

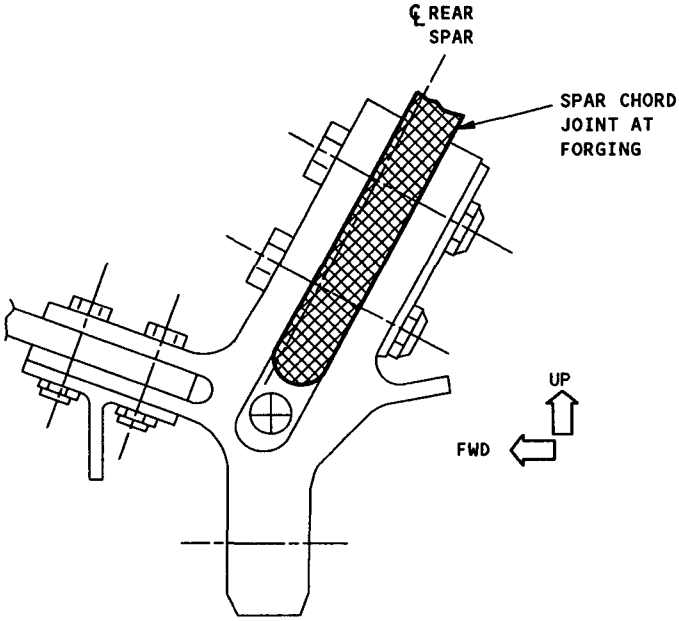

PRIMARY TERMINAL FITTING
VIEW E

NOTE:

LOCATION OF SSI

E-6 (FIN REAR SPAR CHORD JOINT AT FORGING)
DETAIL IV

Structural Significant Items
Figure 3 (Sheet 6)

BOEING PROPRIETARY - Copyright © - Unpublished Work - See title page for details.

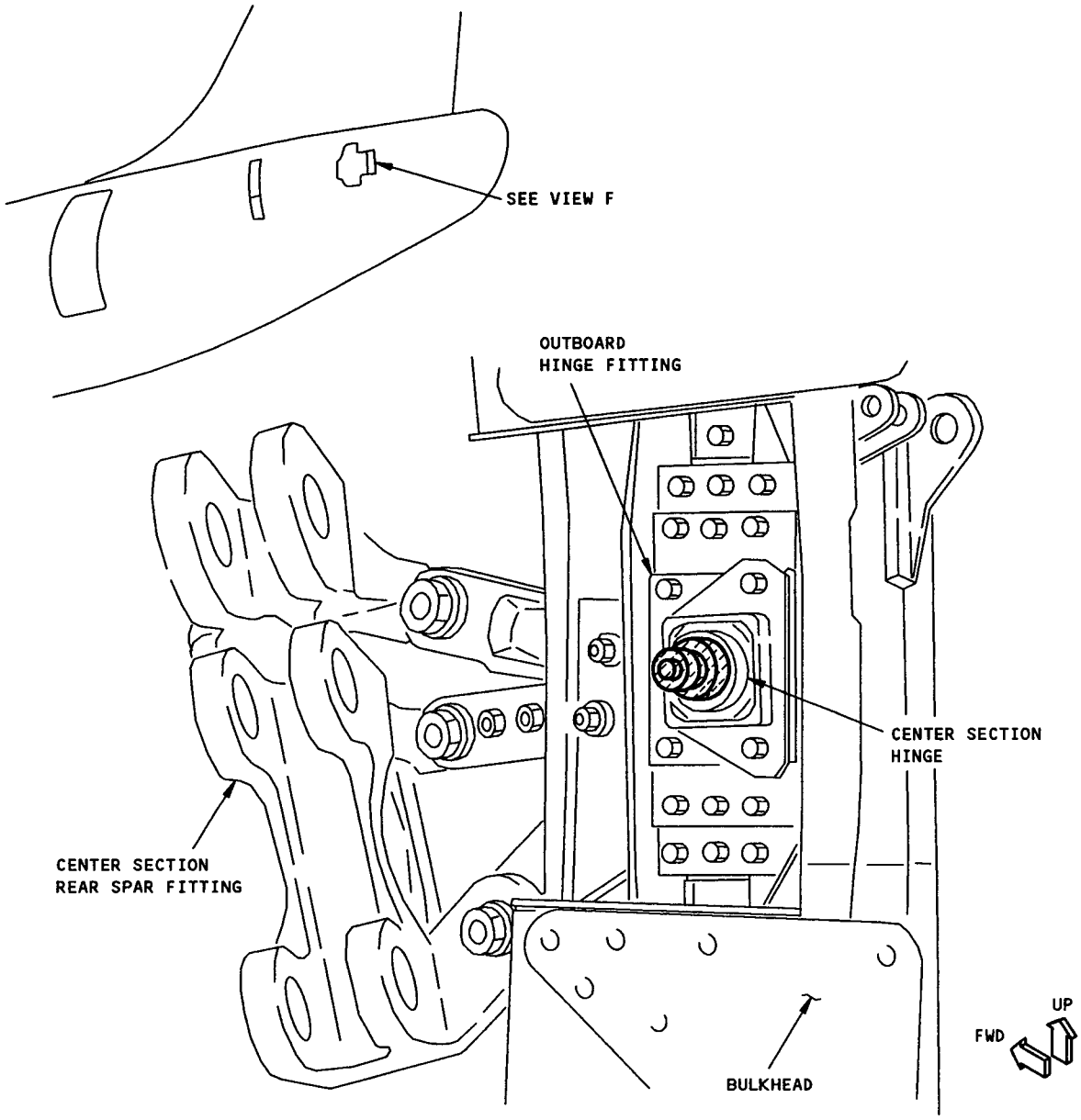

NOTE:

LOCATION OF SSI

VIEW F

E-16 (HORIZONTAL STABILIZER CENTER SECTION HINGE PINS)
DETAIL V

Structural Significant Items
Figure 3 (Sheet 7)

BOEING PROPRIETARY - Copyright © - Unpublished Work - See title page for details.

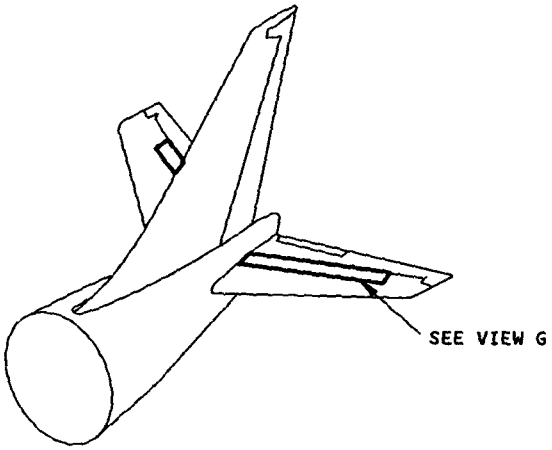

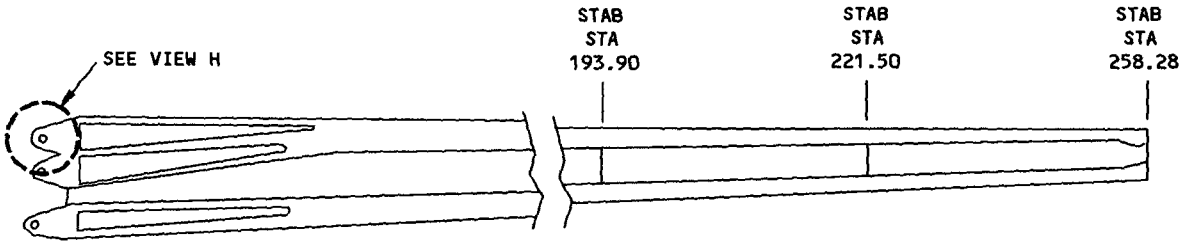

VIEW G

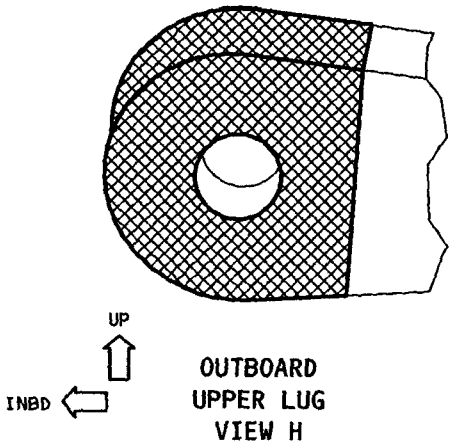

OUTBOARD
UPPER LUG
VIEW H

NOTE:

LOCATION OF SSI

E-19 (HORIZONTAL STABILIZER REAR SPAR
UPPER TERMINAL FITTING LUGS)
DETAIL VI

Structural Significant Items
Figure 3 (Sheet 8)

BOEING PROPRIETARY - Copyright © - Unpublished Work - See title page for details.

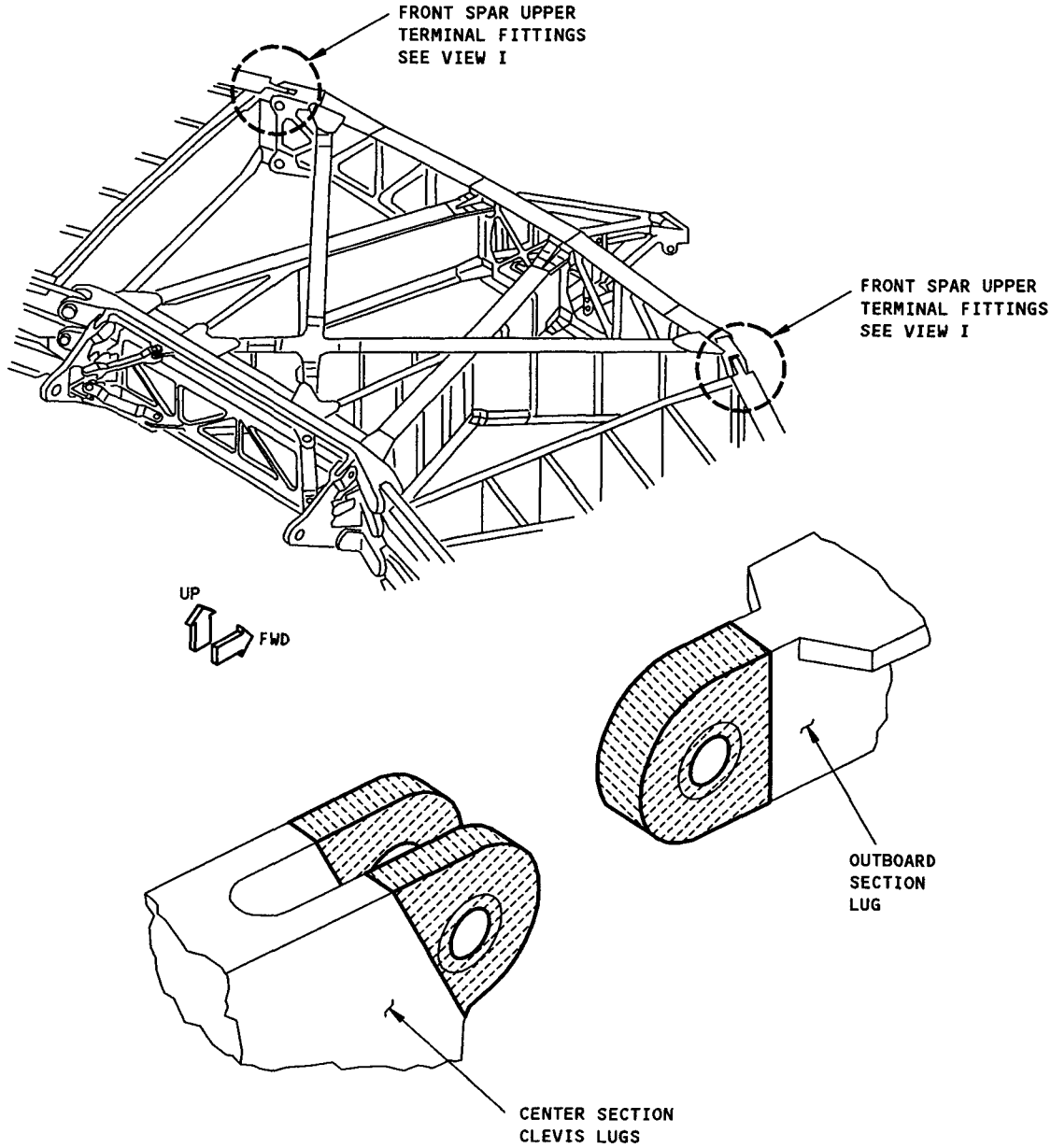

VIEW I

NOTE:

LOCATION OF SSI

E-21 (HORIZONTAL STABILIZER CENTER SECTION
OUTBOARD FRONT SPAR TERMINAL FITTING LUGS)
DETAIL VII

Structural Significant Items
Figure 3 (Sheet 9)

BOEING PROPRIETARY - Copyright © - Unpublished Work - See title page for details.

SSI NUMBER	TITLE	APPLICABILITY
F-1	DOOR, FORWARD AND AFT CARGO (STOP BEAMS)	A B
F-4	DOOR, MAIN DECK CARGO (LATCH HOOKS)	C
F-9	FUSELAGE CUTOUT, ELECTRONIC EQUIPMENT COMPARTMENT ACCESS DOOR (SKIN, CUTOUT FRAME, BEARSTRAP, AND DOUBLER)	A B
F-10	FUSELAGE CUTOUT, FORWARD CARGO DOOR (SKIN, BEARSTRAP, FRAMES AND SILLS)	A B
F-11	FUSELAGE CUTOUT, AFT CARGO DOOR (SKIN, BEARSTRAP, FRAMES AND SILLS)	A B
F-12	FUSELAGE CUTOUT, MAIN DECK CARGO DOOR (SKIN, BEARSTRAP, FRAMES AND SILLS)	C
F-13	FUSELAGE CUTOUT, FORWARD ENTRY DOOR (SKIN, BEARSTRAP, FRAMES AND SILLS)	D
F-14	FUSELAGE CUTOUT, FORWARD ENTRY DOOR (SKIN, BEARSTRAP, FRAMES AND SILLS)	E
F-15	FUSELAGE CUTOUT, FORWARD GALLEY DOOR (SKIN, BEARSTRAP, FRAMES AND SILLS)	A B
F-16	FUSELAGE CUTOUT, AFT GALLEY DOOR (SKIN, BEARSTRAP, FRAMES AND SILLS)	A B
F-17	FUSELAGE CUTOUT, AFT ENTRY DOOR (SKIN, BEARSTRAP, FRAMES AND SILLS)	D
F-18	FUSELAGE CUTOUT, AFT ENTRY DOOR (SKIN, BEARSTRAP, FRAMES AND SILLS)	E
F-19	FUSELAGE CUTOUT, FORWARD ACCESS DOOR, BS 198 TO BS 223 (SKIN, DOUBLER, FRAMES AND SILLS)	A B
F-20	FUSELAGE CUTOUT, ESCAPE HATCH (FRAMES AND SKIN)	A B
F-22	FUSELAGE BULKHEAD, BODY STATION 227 8 (INNER AND OUTER CHORDS, WEB AND DOUBLER)	A B
F-23	FUSELAGE BULKHEAD, BODY STATION 259.5 (LOWER CHORD, FAIL-SAFE CHORD, AND WEB AT WL 192.5)	A B
F-24	FUSELAGE BULKHEAD, BODY STATION 294.5 (OUTER CHORD, SKIN, DOUBLER AND STRAP)	A B
F-25	FUSELAGE BULKHEAD, BODY STATION 540 (OUTER CHORD, WEB AND DOUBLER)	A B
F-29	FUSELAGE BULKHEAD, BODY STATION 727 (OUTER CHORD, FAIL-SAFE CHORD, WEB AND DOUBLER)	A B
F-30A	FUSELAGE BULKHEAD, BODY STATION 1016 (Y-CHORD)	A B
F-30C,D,E	FUSELAGE BULKHEAD, BODY STATION 1016 (PRESSURE DOME WEB)	A B

FUSELAGE STRUCTURE M
TABLE III
Structural Significant Items
Figure 3 (Sheet 10)

BOEING PROPRIETARY - Copyright © - Unpublished Work - See title page for details.

SSI NUMBER	TITLE	APPLICABILITY
F-31	FUSELAGE BULKHEAD, BODY STATION 1088 (FIN TERMINAL FITTINGS AND LUGS, BULKHEAD CHORD AND WEB, WL 285 TO WL 300)	A B
F-32	FUSELAGE BULKHEAD, BODY STATION 1156 (BULKHEAD CHORD, WEB, DOUBLER, AND HINGE SUPPORT BEAMS, WL 263 TO WL 282)	A B
F-33	FUSELAGE, SHEAR TIED FRAMES (TYPICAL BELOW STRINGER S-13, BETWEEN BS 259.5 AND BS 540)	A B
F-34	FUSELAGE, SHEAR TIED FRAMES (TYPICAL BELOW STRINGER S-13, BETWEEN BS 727 AND BS 1016)	A B
F-36	FUSELAGE, UPPER LOBE FRAMES (TYPICAL ABOVE STRINGER S-13, BETWEEN BS 360 AND BS 540, AND BETWEEN BS 727 AND BS 1016)	A B
F-38A	FUSELAGE CIRCUMFERENTIAL SPLICES, BS 360 (STRINGER S-10 AND ABOVE)	H
F-38B	FUSELAGE CIRCUMFERENTIAL SPLICES, BS 360 (STRINGER S-10 AND ABOVE)	I
F-38C, D,E,F,G	FUSELAGE CIRCUMFERENTIAL SPLICES, BS 540 TO BS 1016 (STRINGER S-10 AND ABOVE)	A B
F-39	FUSELAGE CROWN SKIN AND STRINGERS, BS 400 TO BS 480 AND BS 827 TO BS 922, STRINGER S-6 AND ABOVE; BS 480 TO BS 827, STRINGER S-10 AND ABOVE	A
	FUSELAGE CROWN SKIN AND STRINGERS, BS 440 TO BS 500A AND BS 787 TO BS 887, STRINGER S-6 AND ABOVE; BS 500A TO BS 787, STRINGER S-10 AND ABOVE	O
	FUSELAGE CROWN SKIN AND STRINGERS, BS 420 TO BS 500A, STRINGER S-6 AND ABOVE; BS 500A TO BS 807, STRINGER S-10 AND ABOVE; BS 807 TO BS 922, STRINGER S-7 AND ABOVE	C F
F-41	FUSELAGE SKIN AND FRAMES UNDER FAIRINGS	
F-45	CREW CABIN A-B AND C-D POSTS	A B
F-46	FUSELAGE BEAMS OVER MAIN WHEEL WELL (UPPER CHORD AND WEB, BS 662 TO BS 666 AND BS 725 TO BS 729)	A B A B
F-48A	FUSELAGE SKIN LONGITUDINAL LAP SPLICES ABOVE STRINGER S-17, BS 259 TO BS 1016	G
F-48B	FUSELAGE SKIN LONGITUDINAL LAP SPLICES BELOW STRINGER S-17, BS 259 TO BS 1016	G
F-48C	FUSELAGE SKIN LONGITUDINAL LAP SPLICES BELOW STRINGERS S-17, BS 908 TO BS 1016	N
F-49A	NOSE GEAR WHEEL WELL, BS 268.25, WL 160 TO WL 180	
F-49B,C	NOSE GEAR WHEEL WELL (STIFFENER AND WEB OF SIDE PRESSURE BULKHEAD, BS 251.6 TO BS 259.5)	A B A B
F-55	FUSELAGE SKIN AND DOUBLER AT WING PLUS CHORD SPLICE, BS 578 TO BS 639	A B

FUSELAGE STRUCTURE M
TABLE III (Continued)

Structural Significant Items
Figure 3 (Sheet 11)

BOEING PROPRIETARY - Copyright © - Unpublished Work - See title page for details.

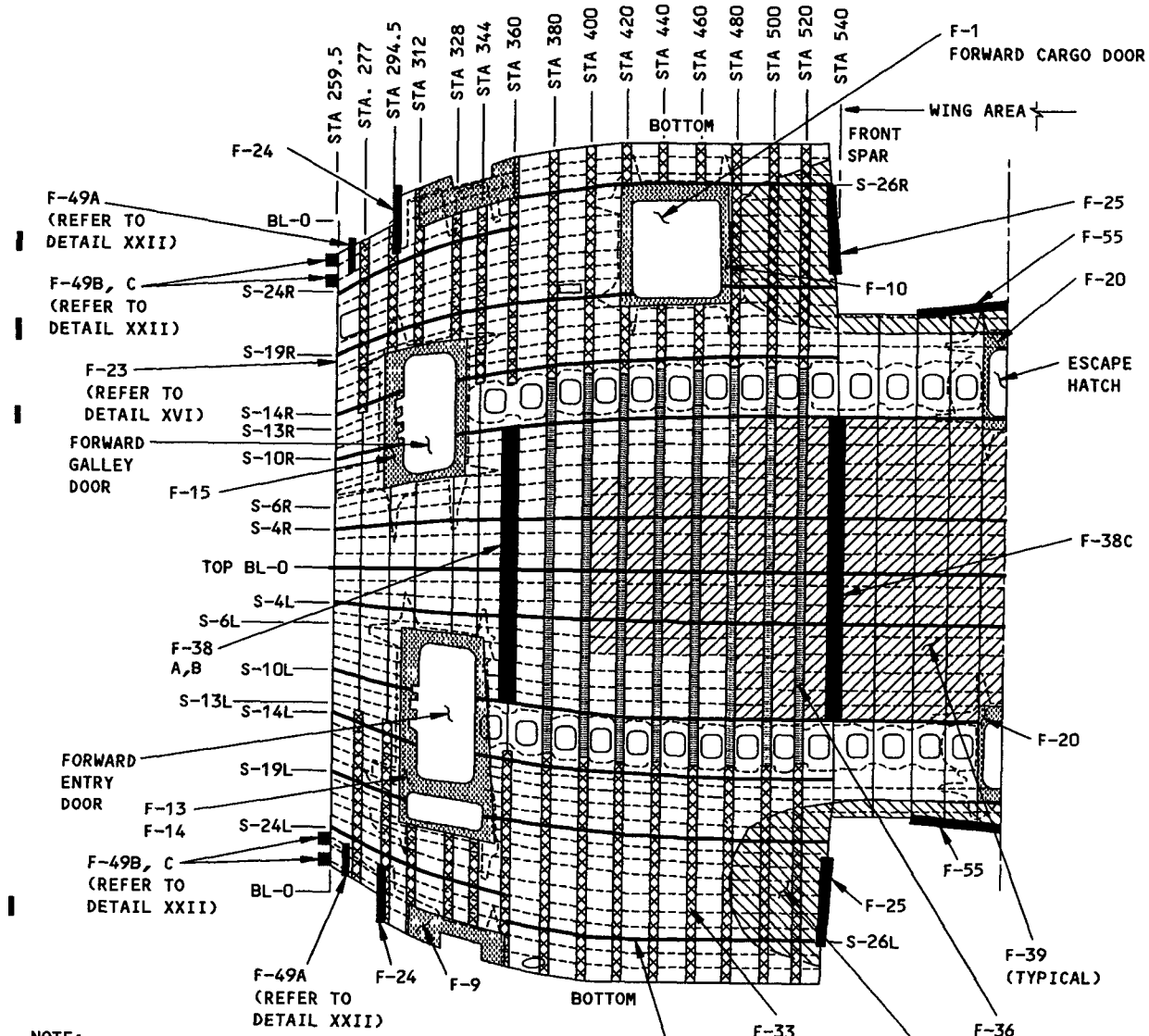

NOTE:

- FOR F-19, REFER TO DETAIL XIV
- FOR F-22, REFER TO DETAIL XV
- FOR F-45, REFER TO DETAIL XX

THE CUTOUT STRUCTURE INCLUDES SKIN, BEARSTRAP, FRAMES AND SILLS

F-36 IS APPLICABLE

F-33 IS APPLICABLE

F-39 IS APPLICABLE

F-41 IS APPLICABLE

FORWARD FUSELAGE STRUCTURE [M]
FOR 737-100 SERIES ONLY
DETAIL VIII

Structural Significant Items
Figure 3 (Sheet 12)

BOEING PROPRIETARY - Copyright © - Unpublished Work - See title page for details.

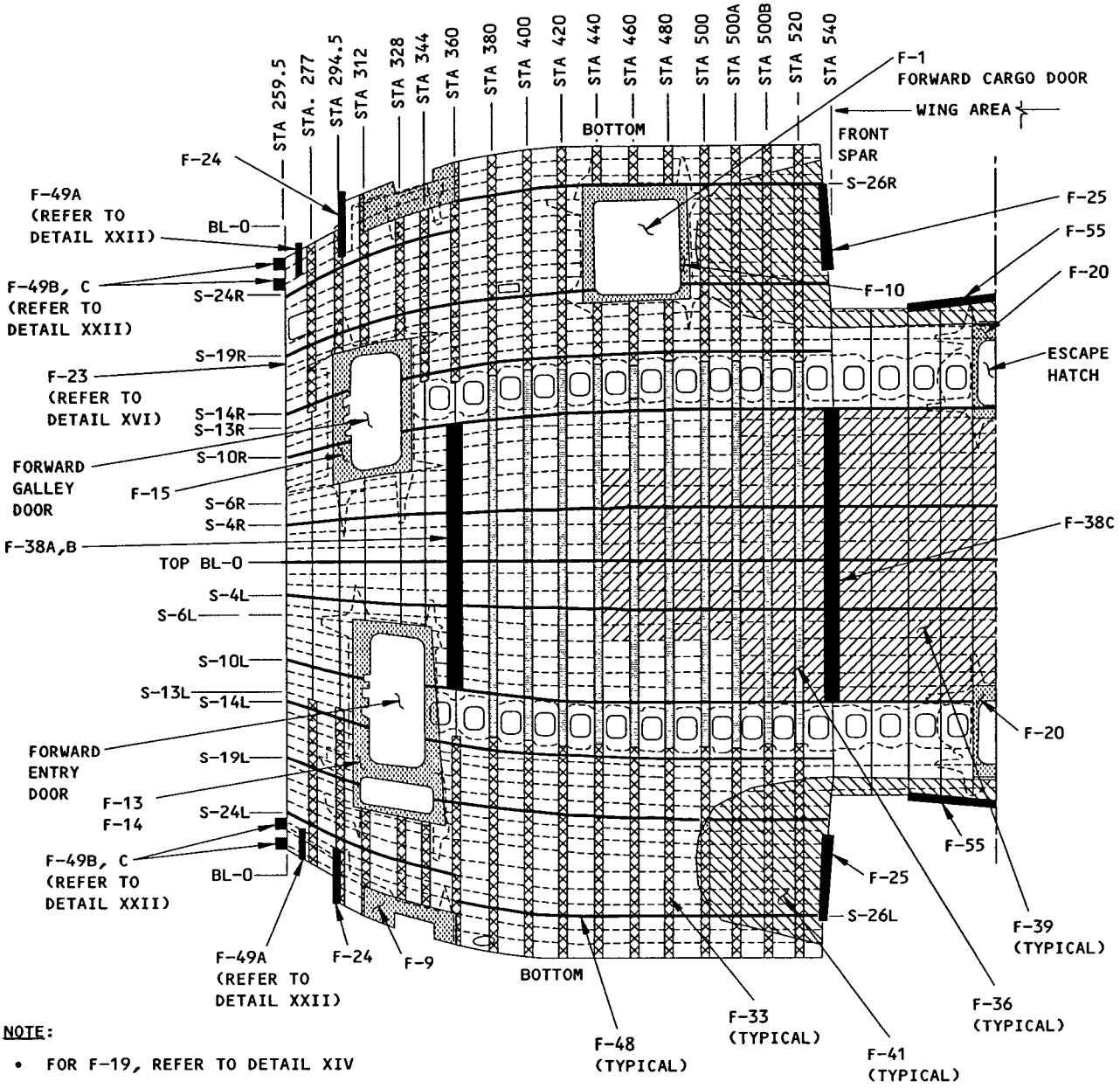

NOTE:

- FOR F-19, REFER TO DETAIL XIV
- FOR F-22, REFER TO DETAIL XV
- FOR F-45, REFER TO DETAIL XX

THE CUTOUT STRUCTURE INCLUDES SKIN, BEARSTRAP, FRAMES AND SILLS

F-36 IS APPLICABLE

F-33 IS APPLICABLE

F-39 IS APPLICABLE TO ALL -200 SERIES EXCEPT -200 HGW. REFER TO DETAIL X FOR -200HGW

F-41 IS APPLICABLE

FORWARD FUSELAGE STRUCTURE
FOR 737-200 SERIES ONLY
DETAIL IX

Structural Significant Items
Figure 3 (Sheet 13)

BOEING PROPRIETARY - Copyright © - Unpublished Work - See title page for details.

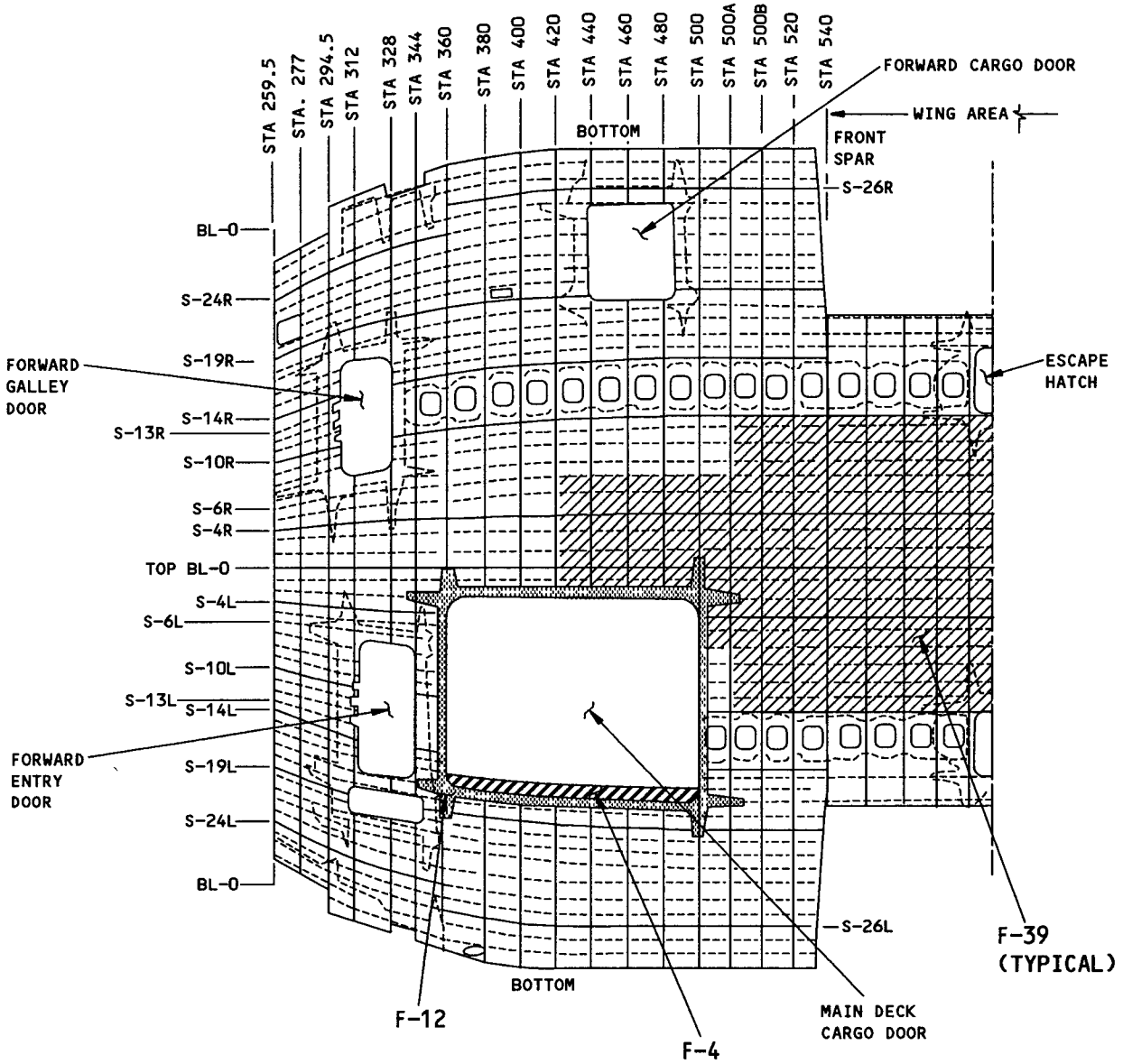

THE CUTOUT STRUCTURE INCLUDES SKIN, BEARSTRAP, FRAMES AND SILLS

F-39 IS APPLICABLE TO -200C AND -200HGW SERIES

FORWARD FUSELAGE STRUCTURE [M]
FOR 737-200C SERIES ONLY
DETAIL X

Structural Significant Items
Figure 3 (Sheet 14)

BOEING PROPRIETARY - Copyright © - Unpublished Work - See title page for details.

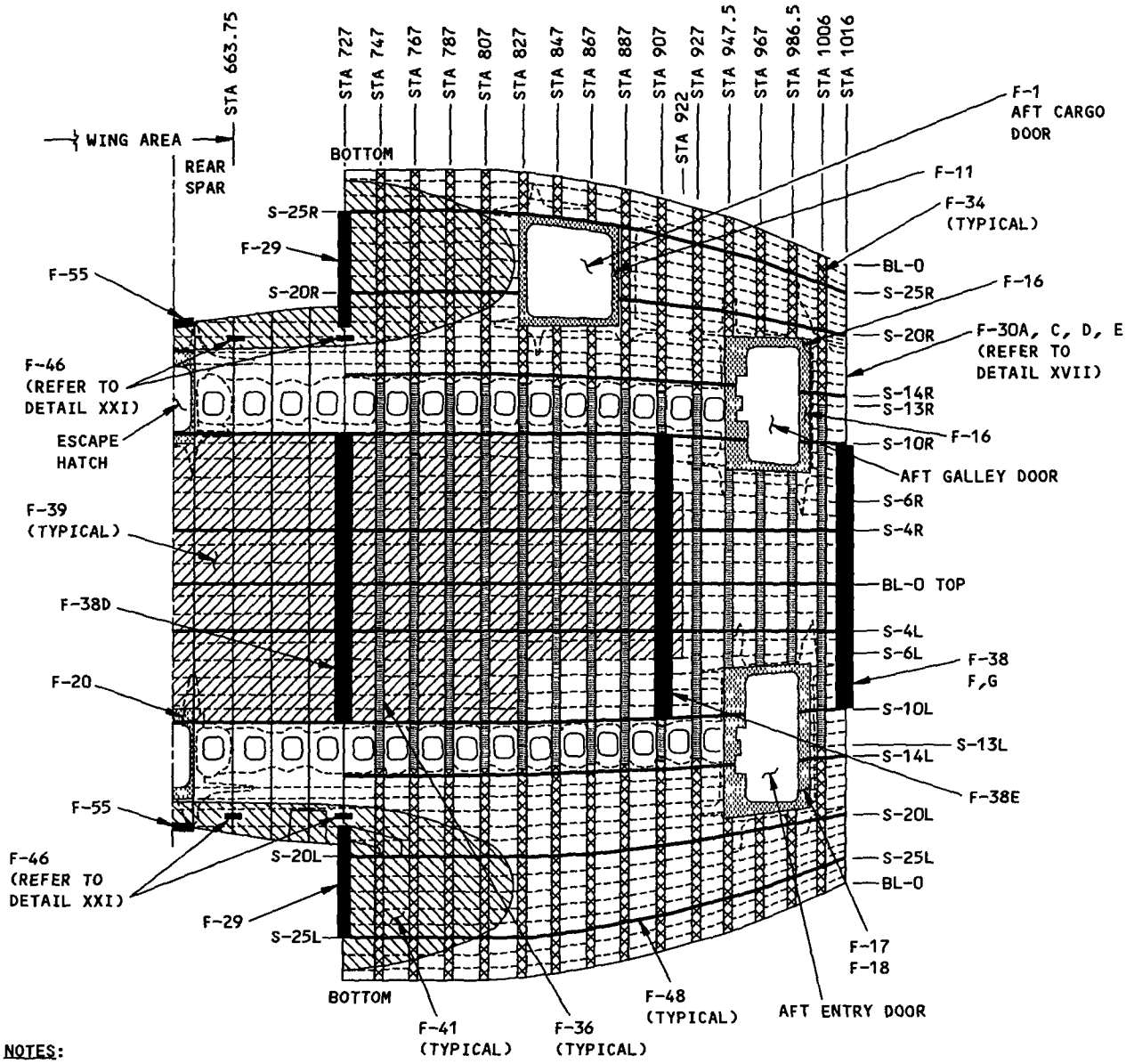

NOTES:

- FOR F-31, REFER TO DETAIL XVIII.
- FOR F-32, REFER TO DETAIL XIX.

THE CUTOUT STRUCTURE INCLUDES SKIN, BEARSTRAP, FRAMES AND SILLS

F-36 IS APPLICABLE

F-34 IS APPLICABLE

F-39 IS APPLICABLE

F-41 IS APPLICABLE

AFT FUSELAGE STRUCTURE [M]
FOR 737-100 SERIES ONLY
DETAIL XI

Structural Significant Items
Figure 3 (Sheet 15)

BOEING PROPRIETARY - Copyright © - Unpublished Work - See title page for details.

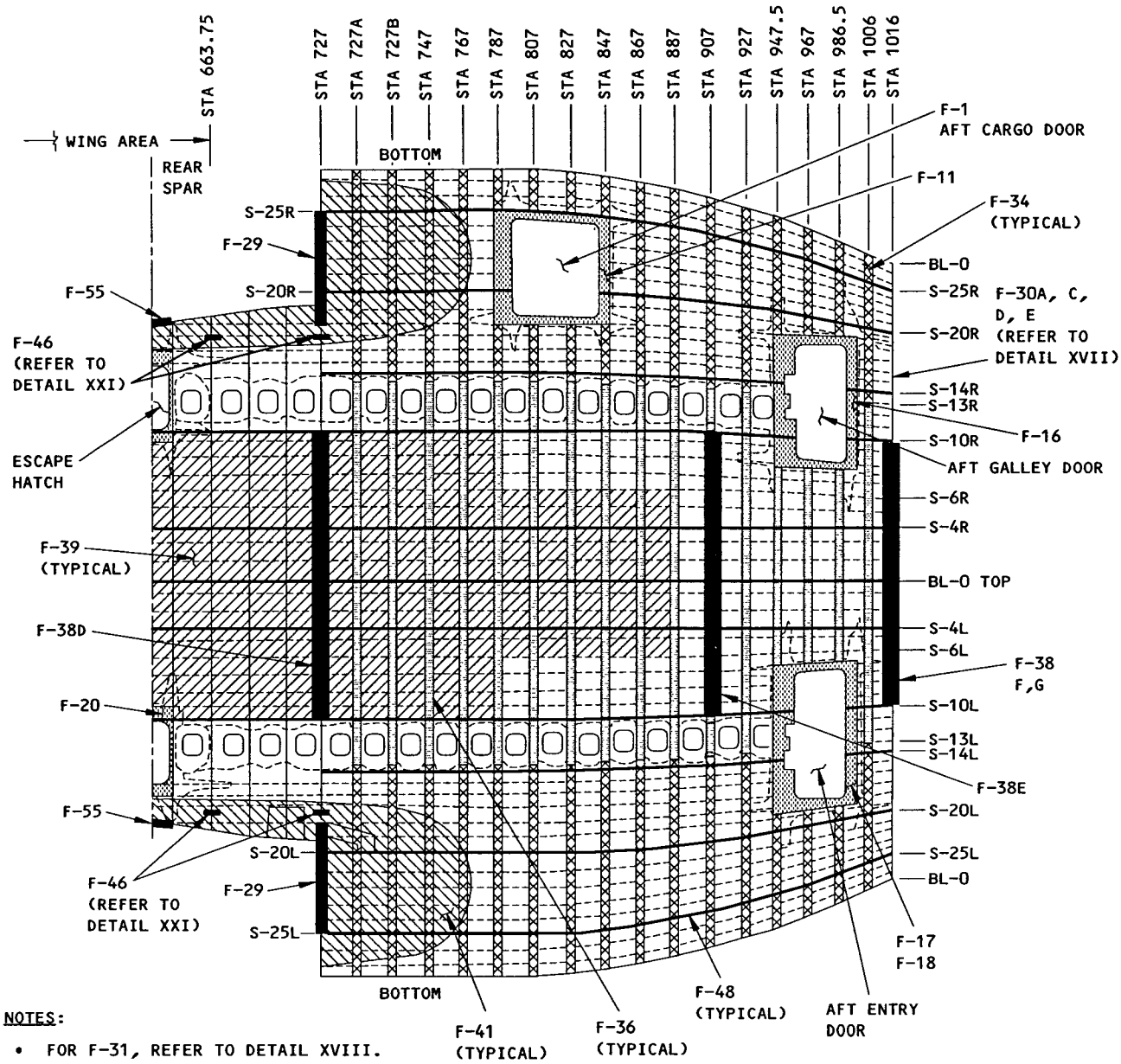

NOTES:

- FOR F-31, REFER TO DETAIL XVIII.
- FOR F-32, REFER TO DETAIL XIX.

THE CUTOUT STRUCTURE INCLUDES SKIN, BEARSTRAP, FRAMES AND SILLS

F-36 IS APPLICABLE

F-34 IS APPLICABLE

F-39 IS APPLICABLE TO ALL -200 SERIES EXCEPT -200HGW. REFER TO DETAIL XIII FOR -200HGW

F-41 IS APPLICABLE

AFT FUSELAGE STRUCTURE [M]
FOR 737-200 SERIES ONLY
DETAIL XII

Structural Significant Items
Figure 3 (Sheet 16)

BOEING PROPRIETARY - Copyright © - Unpublished Work - See title page for details.

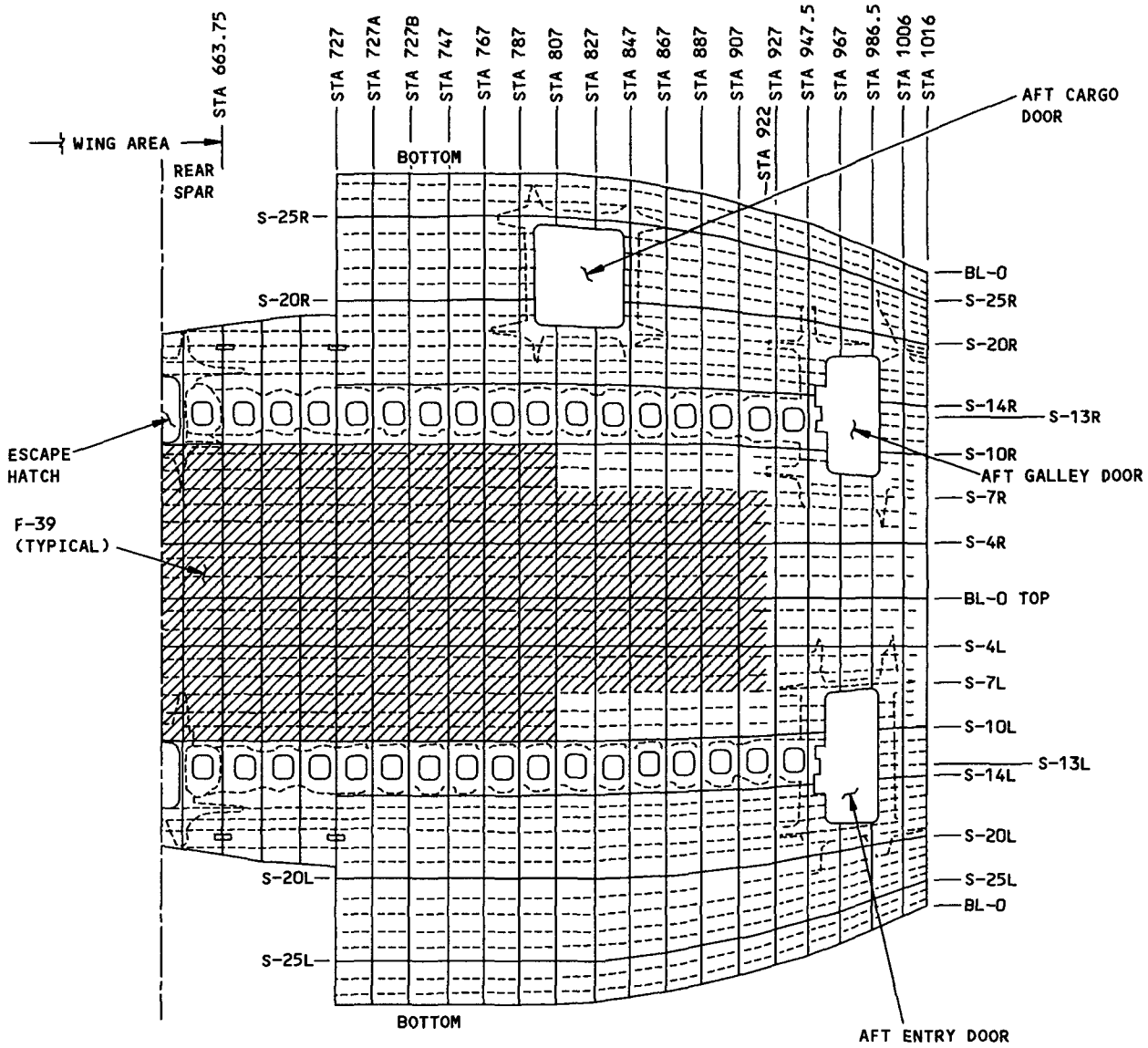

NOTE:

F-39 IS APPLICABLE TO -200C AND -200HGW SERIES

AFT FUSELAGE STRUCTURE [M]
FOR 737-200C SERIES ONLY
DETAIL XIII

Structural Significant Items
Figure 3 (Sheet 17)

BOEING PROPRIETARY - Copyright © - Unpublished Work - See title page for details.

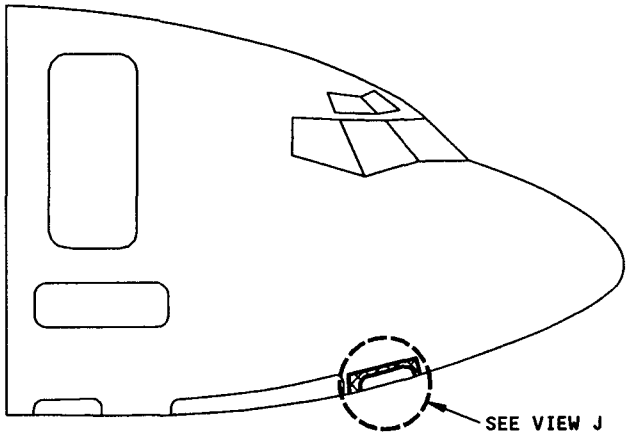

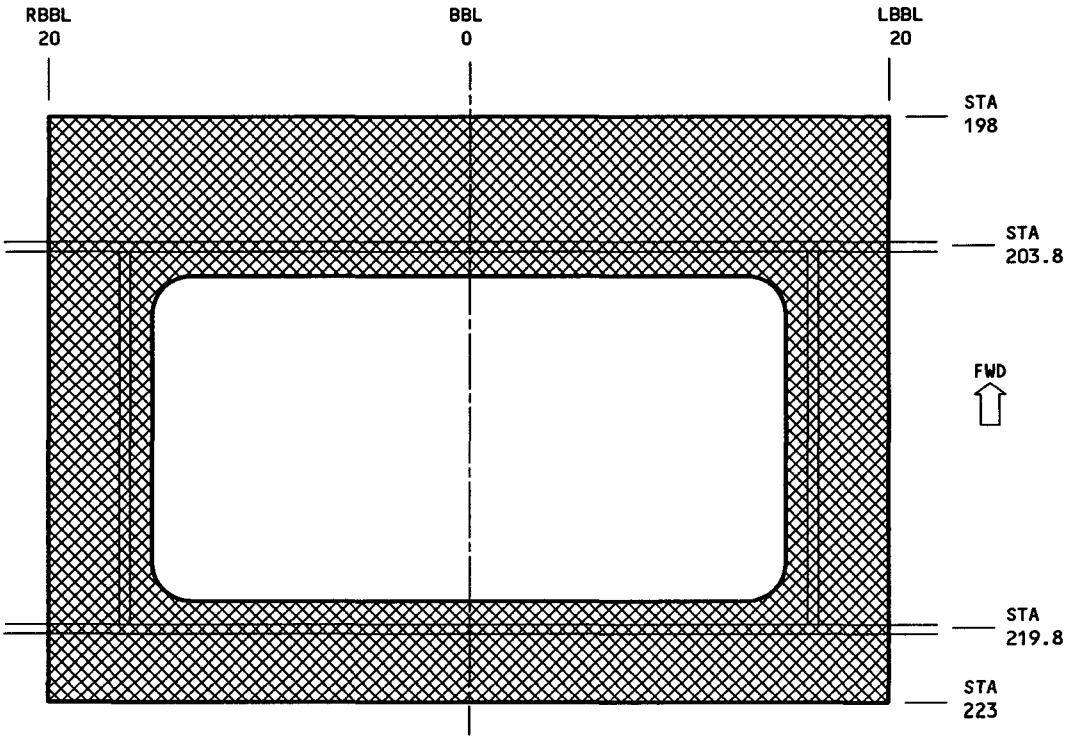

VIEW J

NOTE:

LOCATION OF SSI

F-19 (CUTOUT - FORWARD ACCESS DOOR)
DETAIL XIV

Structural Significant Items
Figure 3 (Sheet 18)

BOEING PROPRIETARY - Copyright © - Unpublished Work - See title page for details.

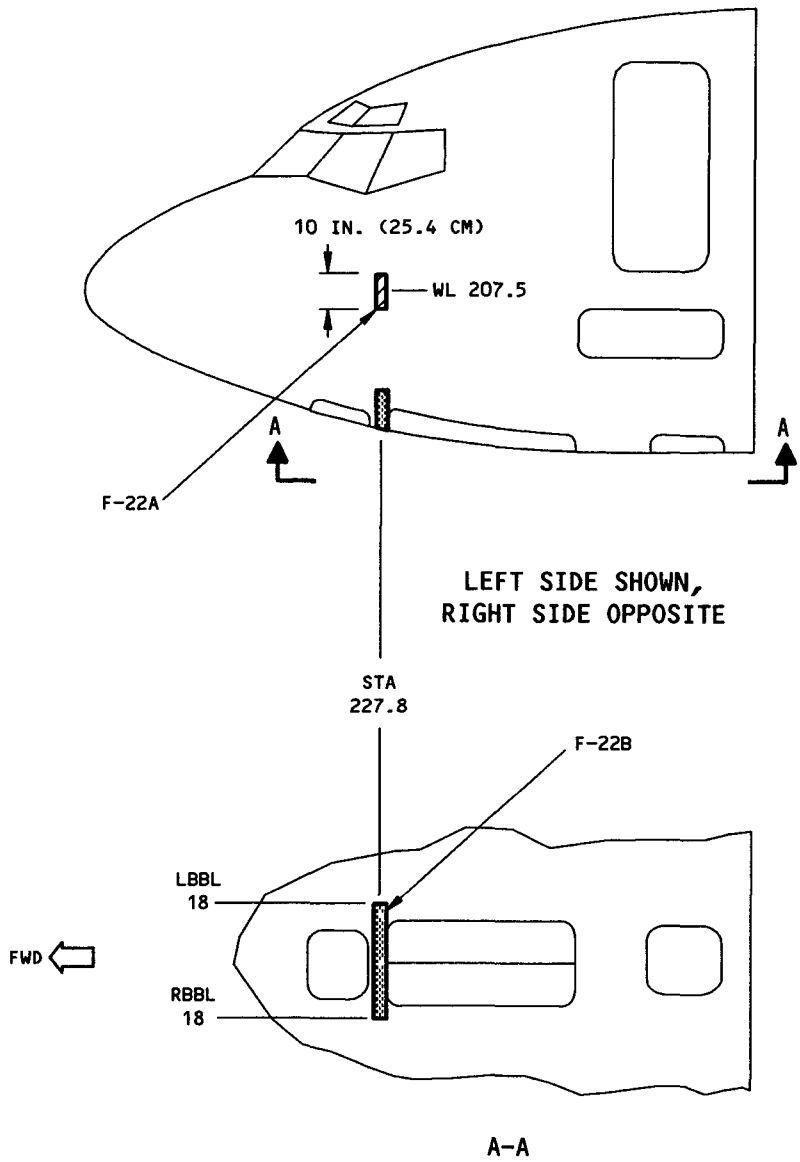

NOTE:

LOCATION OF SSI F-22A

LOCATION OF SSI F-22B

F-22 FUSELAGE BULKHEAD - BODY STATION 227.8
DETAIL XV

Structural Significant Items
Figure 3 (Sheet 19)

BOEING PROPRIETARY - Copyright © - Unpublished Work - See title page for details.

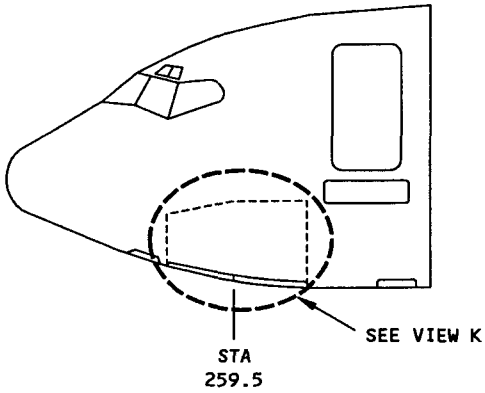

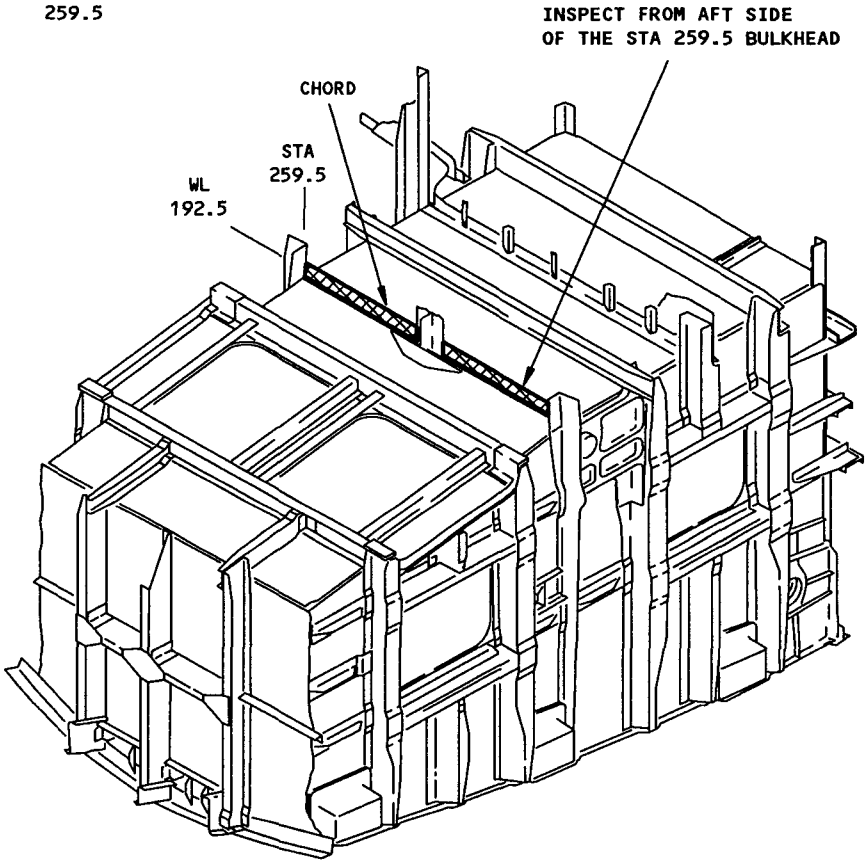

VIEW K

NOTE:

LOCATION OF SSI

F-23 (FUSELAGE BULKHEAD - STA 259.5)
DETAIL XVI

Structural Significant Items
Figure 3 (Sheet 20)

BOEING PROPRIETARY - Copyright © - Unpublished Work - See title page for details.

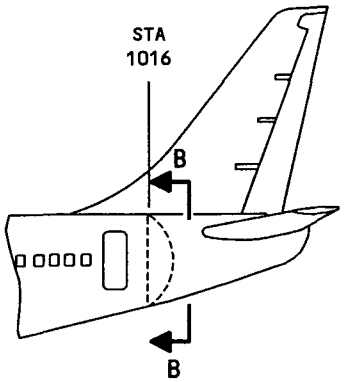

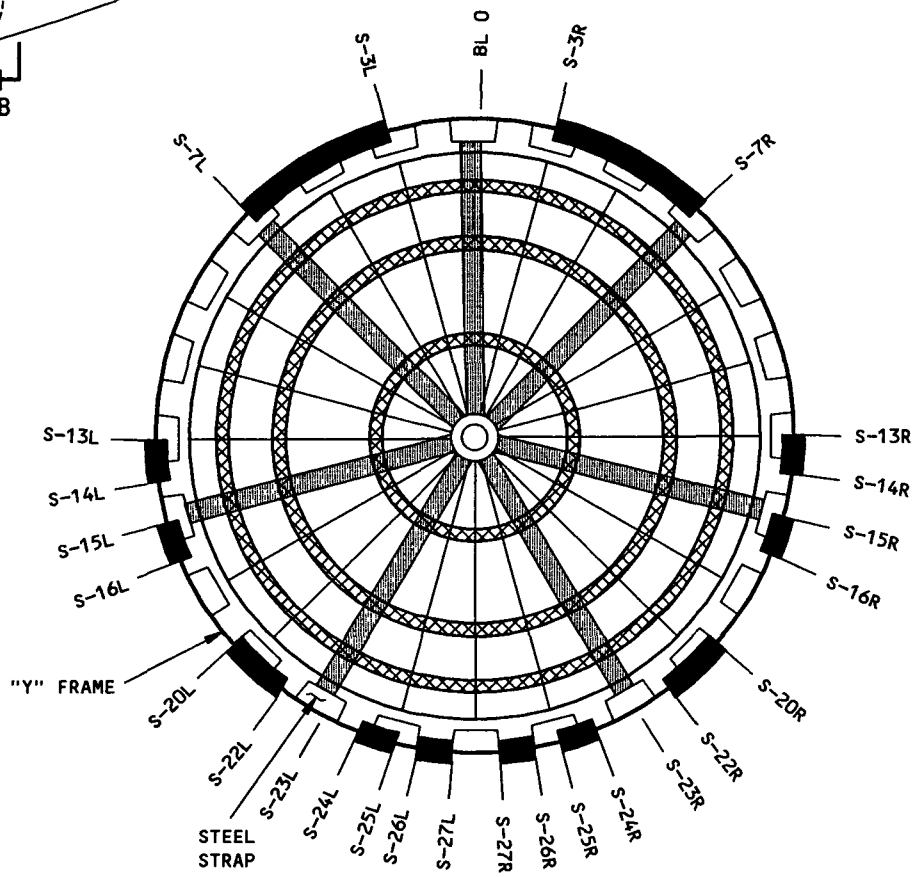

REAR VIEW
SECTION B-B

NOTE:

- LOCATION OF SSI F-30C AND F-30D, WEB SPLICE AT BL 0 AND STRINGERS S-7, S-15, S-23 (LEFT & RIGHT)
- LOCATION OF SSI F-30E, WEB UNDER TEARSTRAP
- LOCATION OF SSI F-30A

F-30 (FUSELAGE BULKHEAD - BODY STATION 1016)
DETAIL XVII

Structural Significant Items
Figure 3 (Sheet 21)

BOEING PROPRIETARY - Copyright © - Unpublished Work - See title page for details.

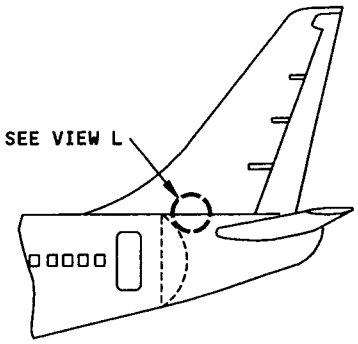

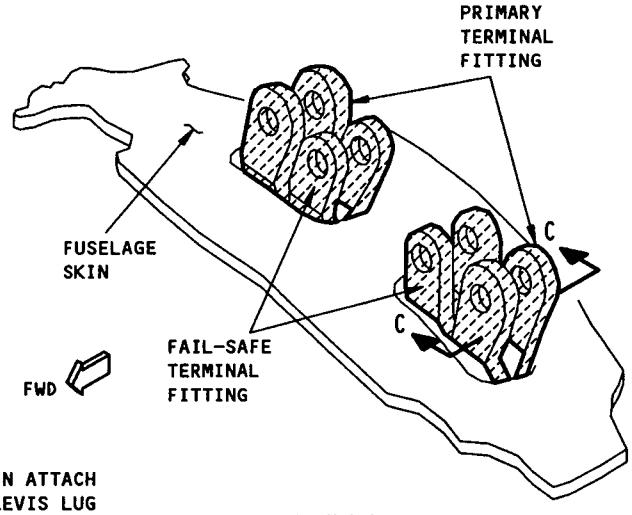

VIEW L

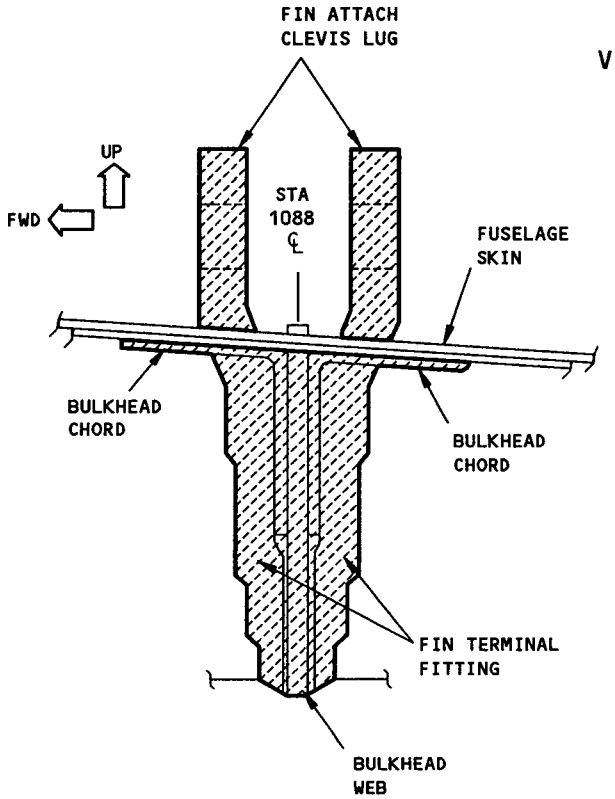

TYPICAL FIN/BULKHEAD FITTINGS ATTACHMENT
SECTION C-C

NOTE:

LOCATION OF SSI

F-31 (FUSELAGE BULKHEAD - BODY STATION 1088)
DETAIL XVIII

Structural Significant Items
Figure 3 (Sheet 22)

BOEING PROPRIETARY - Copyright © - Unpublished Work - See title page for details.

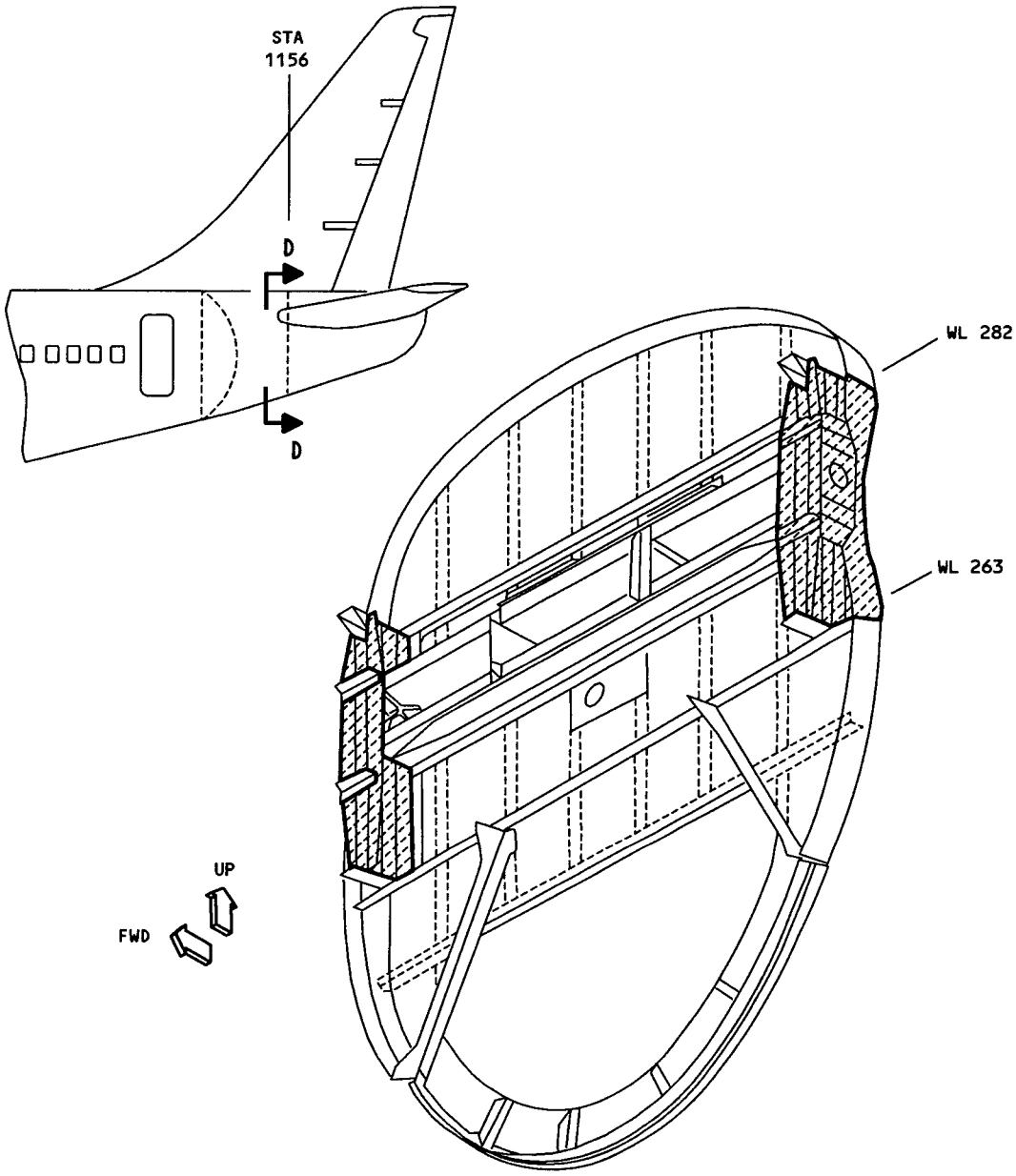

VIEW LOOKING AFT
SECTION D-D

NOTE:

LOCATION OF SSI

F-32 (FUSELAGE BULKHEAD - STA 1156)
DETAIL XIX

Structural Significant Items
Figure 3 (Sheet 23)

BOEING PROPRIETARY - Copyright © - Unpublished Work - See title page for details.

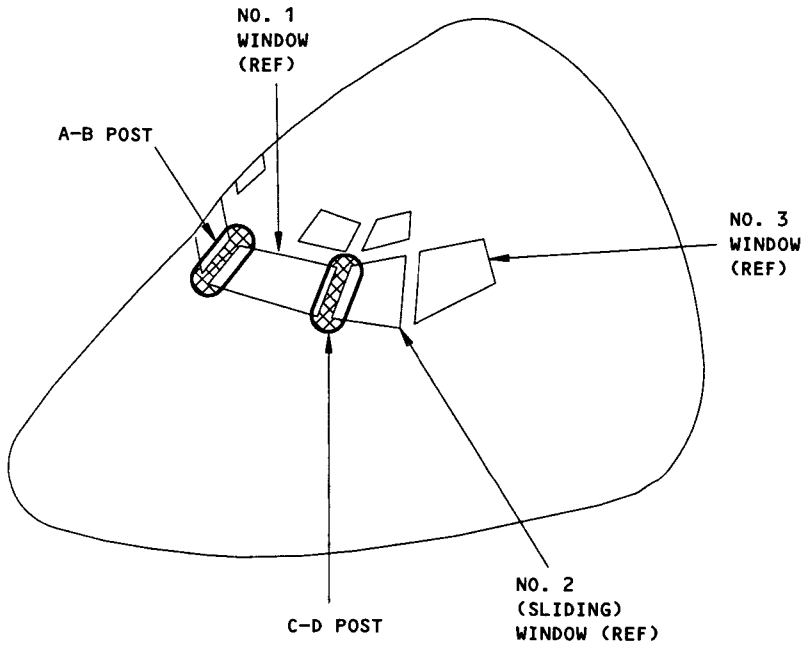

NOTE:

LOCATION OF SSI

F-45 (CREW CABIN A-B AND C-D POSTS)
DETAIL XX

Structural Significant Items
Figure 3 (Sheet 24)

BOEING PROPRIETARY - Copyright © - Unpublished Work - See title page for details.

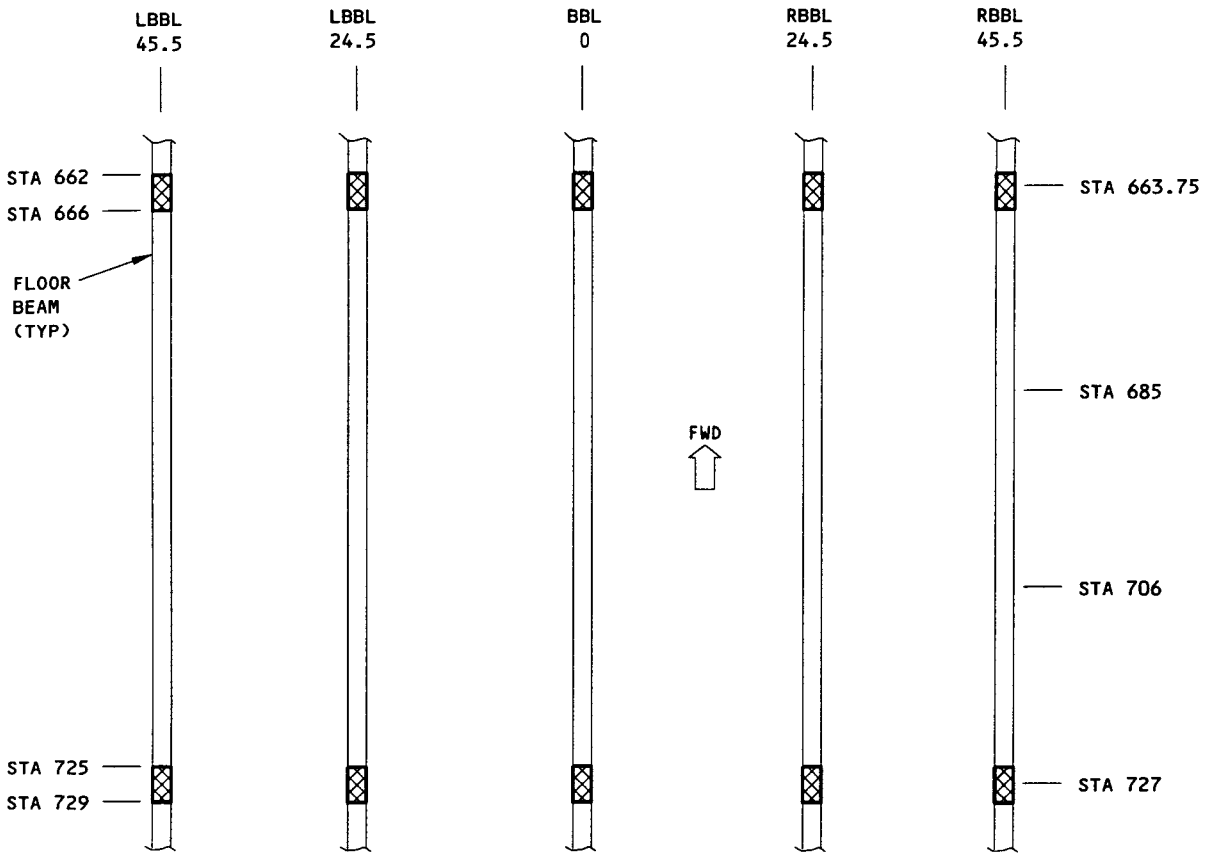

PLAN VIEW
(PASSENGER CABIN FLOOR)

NOTE:

LOCATION OF SSI

F-46 (FUSELAGE BEAMS OVER MAIN WHEEL WELL)
DETAIL XXI

Structural Significant Items
Figure 3 (Sheet 25)

BOEING PROPRIETARY - Copyright © - Unpublished Work - See title page for details.

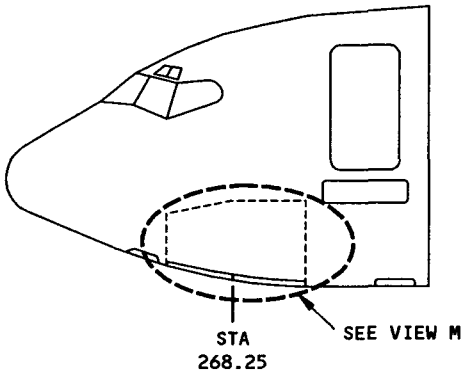

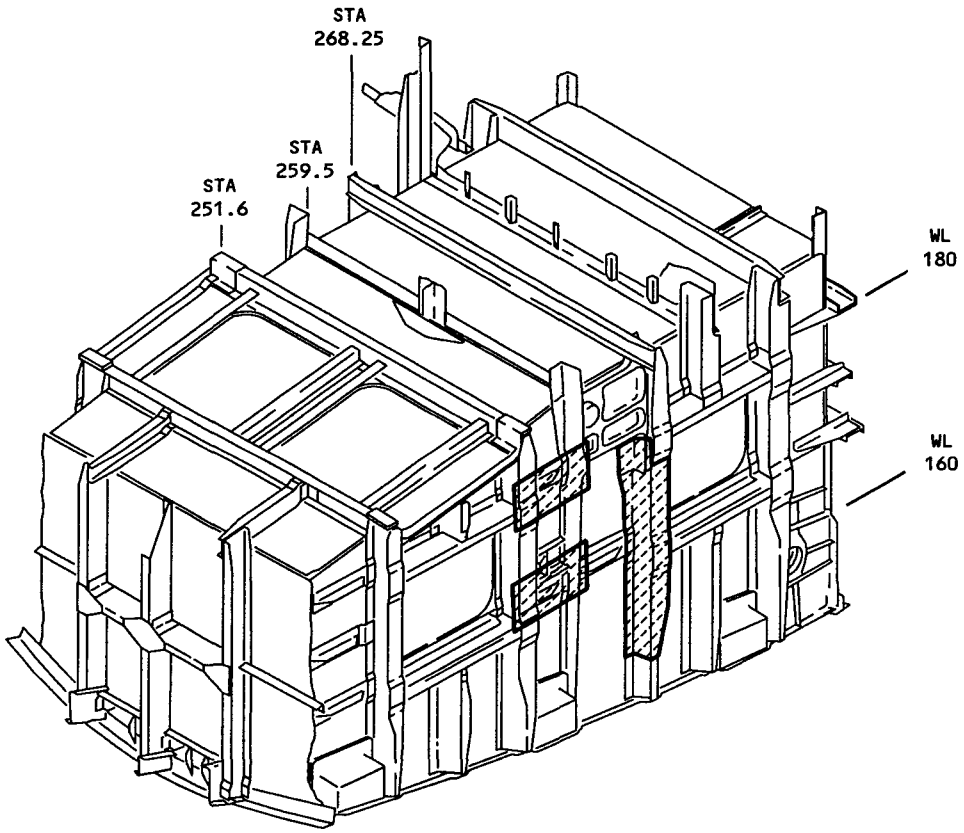

VIEW M

NOTE:

LOCATION OF SSI

F-49 (NOSE GEAR WHEEL WELL)
DETAIL XXII

Structural Significant Items
Figure 3 (Sheet 26)

BOEING PROPRIETARY - Copyright © - Unpublished Work - See title page for details.

SSI NUMBER	TITLE	APPLICABILITY
W-1	WING CENTER SECTION REAR SPAR LOWER CHORD, WEB AND SKIN	A B
W-6	WING CENTER SECTION LOWER SURFACE STRINGERS AND SKIN (STRINGERS S-1 THRU S-4, S6 THRU S-8 AND S-10)	A B
W-8	WING CENTER SECTION LOWER SPLICE STRINGERS AND SKIN (STRINGERS S-5 AND S-9)	A B
W-10	WING LOWER SURFACE BBL 70.85 SPLICE (SPLICE FITTING AND STRINGER, SKIN AND SPLICE PLATE, FROM REAR SPAR TO STRINGER S-11)	A B
W-11	WING UPPER SURFACE BBL 70.85 SPLICE (SKIN, STRINGER, SPLICE FITTING, AND RIB UPPER AND LOWER HORIZONTAL FLANGES, FROM FRONT SPAR TO REAR SPAR)	A B
W-12	WING-TO-BODY JOINT, BBL 70.85 (PLUS CHORD VERTICAL FLANGE RADIUS, FRONT SPAR TO BS 639)	A B
W-13A,B,C	WING REAR SPAR CHORD-TO-TERMINAL FITTING SPLICE (LOWER SURFACE, BBL 70.85)	A B
W-13D,E	WING REAR SPAR CHORD-TO-TERMINAL FITTING SPLICE (UPPER SURFACE, BBL 70.85)	A B
W-14	WING FRONT SPAR LOWER CHORD-TO-TERMINAL FITTING SPLICE, BBL 70.85	A B
W-16	REAR SPAR UPPER CHORD, WEB AND SKIN; FRONT SPAR UPPER CHORD, WEB AND SKIN; UPPER SPANWISE SPLICE (STRINGER S-13) AND SKIN, WBL 114.0 TO WBL 279.25	A B
W-17	WING REAR SPAR LOWER CHORD, WEB AND SKIN, WBL 92.5 TO WBL 279.25	A B
W-19	WING FRONT SPAR LOWER CHORD, WEB AND SKIN, WBL 114.0 TO WBL 355.0	A B
W-25	ACCESS AND BOOST PUMP CUTOUTS, WING LOWER SURFACE, WBL 92.5 TO WBL 355.0	A B
W-27	WING LOWER SURFACE SPLICE STRINGERS (S-5 AND S-9) AND SKIN, WBL 92.5 TO WBL 345	A B
W-31	RIB CHORD, SHEAR TIES AND RIB-TO-STRINGER JOINTS (RIB UPPER CHORD AREAS) WBL 92.5 THRU WS 531	A B
W-34	WING TRAILING EDGE FLAP TRACKS (LOWER FLANGES AND WEBS), WBL 191.0, WBL 254.0 AND WBL 355.0	A B
W-40	DRY BAY LOWER PANEL TYPICAL STRINGERS AND SKIN, WBL 157.0 TO WBL 227.0	A B
W-41	DRY BAY UPPER PANEL TYPICAL STRINGERS AND SKIN, WBL 157.0 TO WBL 227.0	A B
W-42	WING LOWER SURFACE TYPICAL STRINGERS AND SKIN, FORWARD OF DRY BAY, WBL 157.0 TO WBL 227.0	A B

WING STRUCTURE L
TABLE IV
Structural Significant Items
Figure 3 (Sheet 27)

BOEING PROPRIETARY - Copyright © - Unpublished Work - See title page for details.

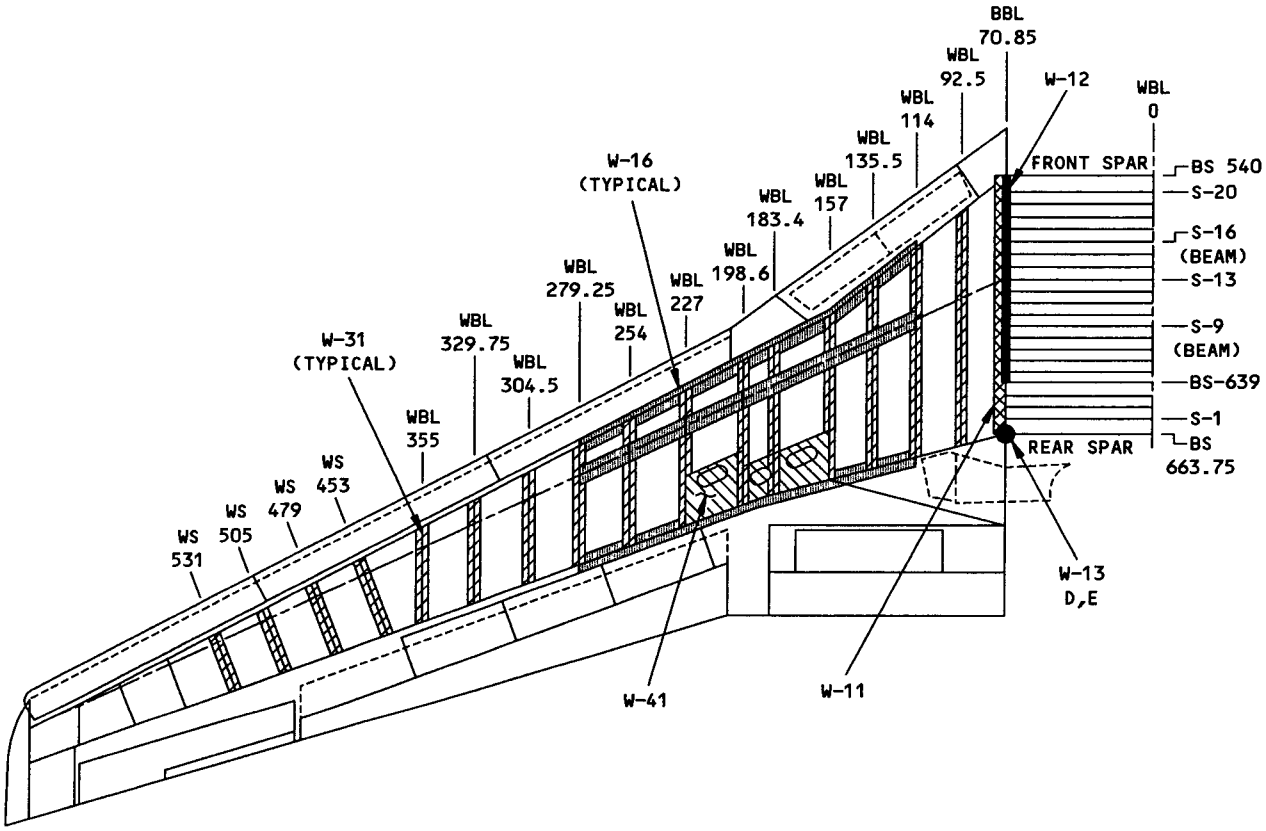

NOTE:

- W-41 IS APPLICABLE
- W-31 IS APPLICABLE
- W-16 IS APPLICABLE

LEFT SIDE IS SHOWN, RIGHT SIDE IS OPPOSITE
WING STRUCTURE UPPER SURFACE
DETAIL XXIII

Structural Significant Items
Figure 3 (Sheet 28)

BOEING PROPRIETARY - Copyright © - Unpublished Work - See title page for details.

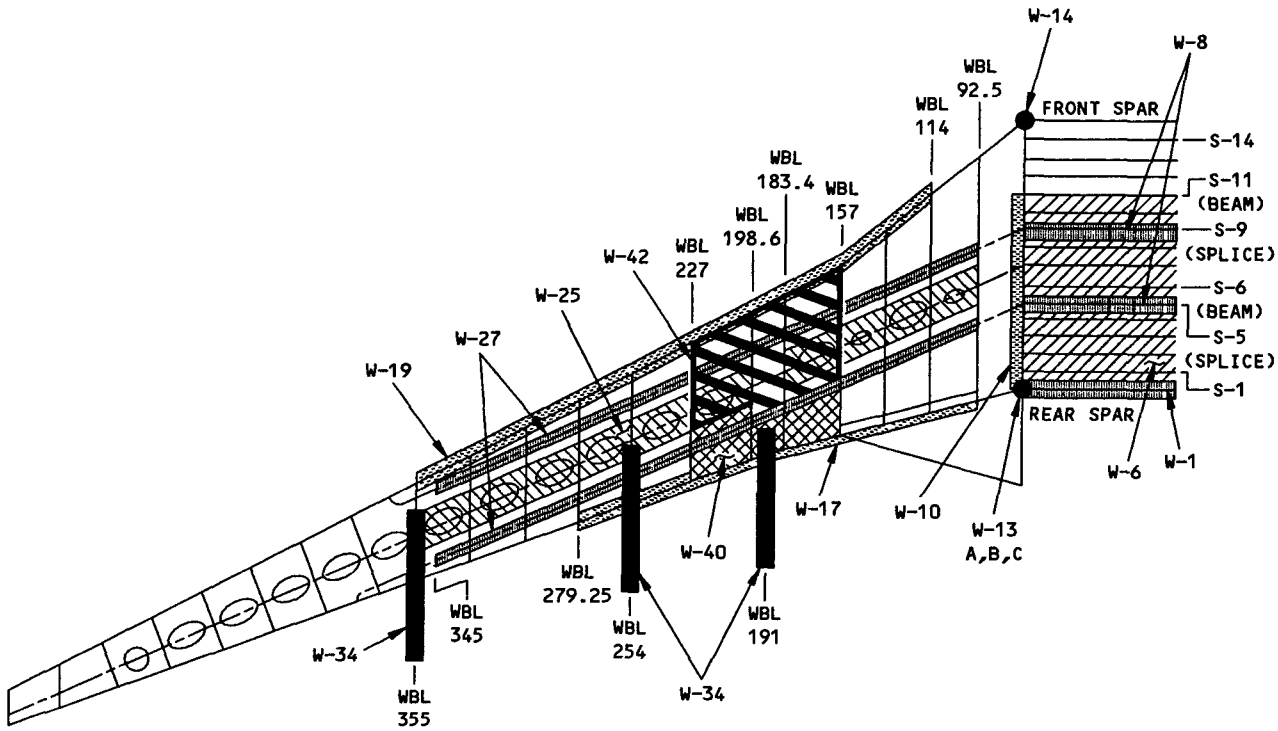

NOTE:

- W-25 IS APPLICABLE
- W-6 IS APPLICABLE
- W-40 IS APPLICABLE
- W-42 IS APPLICABLE

LEFT SIDE IS SHOWN, RIGHT SIDE IS OPPOSITE
(WINGBOX STRUCTURE IS ONLY SHOWN)

WING STRUCTURE LOWER SURFACE
DETAIL XXIV

Structural Significant Items
Figure 3 (Sheet 29)

BOEING PROPRIETARY - Copyright © - Unpublished Work - See title page for details.

SSID AREAS AFFECTED BY SRM REPAIRS P Q			
SRM	REPAIR FIGURE	INSPECTION THRESHOLD (FLIGHT CYCLES)	SSID
52-00-3	2	66,000 U	F-1
	3	66,000 U	F-1
	5	66,000 U	F-1
	6	66,000 U	F-1
52-30-2	3	66,000 U	F-1
53-10-3	3	66,000 U	F-39
	4	66,000 U	F-39
	5	66,000 U	F-15
53-10-4	1	66,000 U	F-33, F-34 and F-36
	2	66,000 U	F-36
	3	66,000 U	F-30
	6, 7, 8, 9, 9A, 10, 11	66,000 U	F-33 and F-34
	12	66,000 U	F-30
	13	66,000 U	F-30
	14	66,000 U	F-39
	15	66,000 U	F-30
53-30-3	1, 2, 6, 7, and 8	66,000 U	F-39 and F-41
	9 and 10	66,000 U	F-41 and F-48
	11 and 11A	66,000 U	F-45
	13	66,000 U	F-41 and F-48
	14	66,000 U	F-41 and F-48
	15 and 16	66,000 U	F-41 and F-48
	17, 18, and 19	66,000 U	F-39 and F-41
	20	66,000 U	F-15
	21	66,000 U	F-13 and F-14
	21A	66,000 U	F-16 and F-17
	24	66,000 U	F-16, F-17 and F-18
	25	66,000 U	F-41
	26	66,000 U	F-15
	27	66,000 U	F-41 and F-48
	28	66,000 U	F-38 and F-39
	31	66,000 U	F-13 and F-14
	32	66,000 U	F-15
	33	66,000 U	F-16
	34	66,000 U	F-17
	35	66,000 U	F-16
	36	66,000 U	F-17
	42	66,000 U	F-38, F-39 and F-41
	43	66,000 U	F-39 and F-41
	44	66,000 U	F-48
	45	66,000 U	F-16 and F-17
	46	66,000 U	F-10, F-11, F-16, F-17,F-18 and F-48
	47	66,000 U	F-45

TABLE V

Structural Significant Items
Figure 3 (Sheet 30)

BOEING PROPRIETARY - Copyright © - Unpublished Work - See title page for details.

SSID AREAS AFFECTED BY SRM REPAIRS P Q			
SRM	REPAIR FIGURE	INSPECTION THRESHOLD (FLIGHT CYCLES)	SSID
55-10-3	4	66,000 U	E-17 and E-18
	5	66,000 U	E-17 and E-18
	6	66,000 U	E-17 and E-18
	7	66,000 U	E-17 and E-18
	8	66,000 U	E-17 and E-18
55-10-5	1	66,000 U	E-18
	2	66,000 U	E-18
	3	66,000 U	E-17
55-30-3	1	66,000 U	E-1 and E-4
	2	66,000 U	E-1 and E-4
55-30-5	1	66,000 U	E-1
	2	66,000 U	E-4
57-10-4	1	60,000 R	W-31 and W-41
	2	60,000 R	W-31
	3	50,000 R	W-16
	5	66,000 R	W-6, W-40 and W-42
	6	50,000 R	W-6, W-40 and W-42
	7	60,000 R	W-8
57-10-6	1	66,000 R	W-16 and W-19
	2	66,000 R	W-16 and W-17
57-10-7	1	66,000 R	W-31
57-30-3	1	52,000 R S	W-16 and W-41
		66,000 R T	
	2	66,000 R	W-31 and W-41
	3	29,000 R S	W-6, W-8, W-40, and W-42
		66,000 R T	
	4	36,000 R S	W-6, W-8, W-40, and W-42
		66,000 R T	

TABLE V (Continued)

Structural Significant Items
Figure 3 (Sheet 31)

BOEING PROPRIETARY - Copyright © - Unpublished Work - See title page for details.

GENERAL - CROSS REFERENCES FOR BOEING SOURCE DOCUMENTS

1. General

A. Some Chapter 51 data has been derived from the Boeing Process Specifications document, D-18888-1, and other Boeing source documents. Refer to TABLE I for a list of these source documents and the SRM ATA Number where the data is incorporated. If the source document is only referred to in a SRM ATA, the source document will not be listed.

ATA NUMBER	SOURCE DOCUMENT	SUBJECT
51-10-2	D6-5000	Protective Finish Applications
51-10-3	BAC 5946	Hardness Testing
51-10-8	BAC 5730	Shot Peening
51-20-1	BAC 5300	Forming, Straightening, and Fitting of Metal Parts
51-20-4	BAC 5000	Fay and Fillet Seals
51-30-2	BAC 5004-1	Installation of Solid Rivets
	BAC 5004-2	Installation of Permanent Straight Shank Fasteners
	BAC 5004-3	Installation of Blind Fasteners
	BAC 5009	Bolt and Nut Installation
	BAC 5047	Installation of Fluid-Tight Fasteners
	BAC 5054	Installation of Taper Shank Fasteners
	BAC 5060	Installation of Interference Fit, Radius Lead-in Fasteners
	BAC 5063	Fastener Installation in Composite Structure
	BAC 5060	Installation of Interference Fit, Radius Lead-in Fasteners
	BAC 5009	Bolt and Nut Installation
	BAC 5047	Installation of Fluid-Tight Fasteners
	BAC 5063	Fastener Installation in Composite Structure
51-30-8	BACD2027	Countersink Symbols and Dimensions
51-30-9	BAC 5973	Sleeve Cold Working of Holes in Aluminum
51-40-5	D6-48758	Structural Repair Bonding
	BAC 5514	Common Bonding Requirements for Structural Adhesives
	BAC 5514-589	Application of Corrosion Inhibiting Adhesive Primer
	BAC 5555	Phosphoric Acid Anodizing of Aluminum for Structural Repair Bonding
51-40-9	BAC 5056	Fabrication of Flame-Sprayed Aluminum Coatings
51-40-17	BAC 5598	Bonding Aluminum Foil to Composite Parts

TABLE I

BOEING PROPRIETARY - Copyright © - Unpublished Work - See title page for details.

Structural Repair Definitions

1. Applicability

   A. This subject gives the definitions related to repair classification and inspection for damage tolerant and non-damage tolerant primary or secondary structures as applicable.

   B. It also gives information about the repair assessment process defined for the fuselage pressure boundary structure.

2. General

   A. There are two classifications of repairs in this SRM:

      (1) Repairs that have been evaluated and analyzed for damage tolerance capability and are classified as Category A, B, or C repairs.

      (2) Repairs that have not been evaluated and analyzed for damage tolerance capability and are classified as Permanent, Interim or Time-Limited Repairs.

         NOTE: If a repair is not identified as an interim or time-limited repair it is a permanent repair.

   B. The definitions of the different categories of damage tolerant repairs are as follows:

      (1) Category A Repair: A permanent repair for which the inspections given in the Baseline Zonal Inspection (BZI) are sufficient and no other actions are necessary.

      (2) Category B Repair: A permanent repair for which supplemental inspections are necessary at the specified threshold and repeat intervals.

      (3) Category C Repair: A time-limited repair which must be replaced or reworked within a specified time limit. Also supplemental inspections can be necessary at a specified threshold and repeat interval.

   C. The definitions of the different types of repairs that have not been evaluated and analyzed for damage tolerance are as follows:

      (1) Permanent Repair: A repair where no action is necessary except the operator's normal maintenance.

      (2) Interim Repair: A repair that has the necessary structural strength and could stay on the aircraft indefinitely. The repair must be inspected at specified intervals and replaced if deterioration is detected or damage is found.

      (3) Time-Limited Repair: A repair that has the necessary structural strength but does not have sufficient durability. This repair must be replaced after a specified time, usually given as a number of flight cycles, flight hours or a calendar time.

BOEING PROPRIETARY - Copyright © - Unpublished Work - See title page for details.

D. The definitions of the terms as they apply to the repairs are as follows:

(1) Baseline Zonal Inspection (BZI): A set of typical maintenance inspection intervals that are assumed to be performed by most operators, and defined in the Repair Assessment Guidelines document. BZI was the basis for the creation of a list of structural areas or types of repairs that would not require supplemental inspection. The type of inspection associated with the BZI is General Visual Inspection (GVI) of all visible structure in the area being inspected.

Some SRM repairs were chosen to be Category A or B comparing their inspection requirements with the baseline zonal inspection intervals for the areas repaired. If the BZI interval was adequate to maintain damage tolerance, the repair was labeled Category A. If not, the repair was labeled category B. Operators must be aware that if their current inspection intervals exceed the BZI intervals, the repair categories may not apply. See the Repair Assessment Guidelines document (D6-38669) for complete information.

(2) Damage Tolerance: The ability of structure to sustain anticipated loads in the presence of damage, such as fatigue cracks until it is detected through inspection or malfunction, and repaired.

(3) Damage Tolerant Repair: A repair that meets the necessary damage tolerance conditions.

(4) Repeat Intervals: The period in flight cycles, flight hours or calendar time that occurs between the necessary inspections.

(5) Supplemental Inspections: Special inspections of the repaired structure which are done in addition to an operator's normal maintenance inspections.

(6) Threshold: The period in flight cycles, flight hours or calendar time from the time an airplane is delivered or a repair is made until the first supplemental inspection is necessary.

For Category B repairs, the threshold starts from the time the repair was installed if the repair fasteners in the critical rows have been installed in new fastener holes or existing fastener holes that have been zero-timed. If the repair fasteners are installed in existing fastener holes that have not been zero-timed, the inspection threshold will start from the time the airplane was delivered.

(7) Time-Limit: The maximum period in flight cycles, flight hours or calendar time that is permitted until it is necessary to replace or rework a time-limited repair.

(8) Zero-Timing: The process used to improve the repair durability in order to make the inspection threshold start from the time the repair is installed. This involves the removal of small cracks and fatigue damaged material by oversizing the existing fastener holes before the repair is installed as given in SRM 51-10-1. Zero-timing must only be used where specifically permitted in an SRM chapter-section-repair. Also zero-timing must not cause short edge-margin and fastener spacing, and knife-edging on the repair fasteners.

(9) Critical Fastener Row: Fastener row to be inspected to meet damage tolerance requirements.

BOEING PROPRIETARY - Copyright © - Unpublished Work - See title page for details.

E. Damage Tolerance Assessment of Repaired Structure

The damage tolerance assessment of a repair is done to determine the effect that the repair has on the damage tolerance capability, and inspectability, of the initial structure. This assessment is also used to identify the inspections that are necessary to keep the repaired structure in an airworthy condition. The SRM will provide the inspection requirements for fuselage pressure-boundary repairs that are published in the SRM. However, fuselage pressure-boundary repairs developed by the operators will need to be assessed using the Repair Assessment Guidelines document. Refer to Figure 1 for the process diagram that is given in this document. Damage tolerance assessment of the repaired structure can be completed after an airplane is returned to service.

F. Types of inspections that are used to detect damage in structure are as follows:

(1) General Visual (Surveillance) Inspection (GVI): A visual examination of an interior or exterior area, installation or assembly to detect obvious damage, failure or irregularity. This level of inspection is made from within touching distance unless otherwise specified. A mirror may be necessary to enhance visual access to all exposed surfaces in the inspection area. This level of inspection is made under normally available lighting conditions such as daylight, hangar lighting, flashlight or drop-light and may require removal or opening of access panels or doors. Stands, ladders or platforms may be required to gain proximity to the area being checked.

(2) Detailed Inspection (DET): An intensive examination of a specific item, installation or assembly to detect damage, failure or irregularity. Available lighting is normally supplemented with a direct source of good lighting at an intensity deemed appropriate by the inspector. Inspection aids such as mirrors, magnifying lenses, etc. may be used. Surface cleaning and elaborate access procedures may be required.

(3) Special Detailed (Non-Destructive Testing) Inspection (SDI): An intensive examination of a specific item(s), installation, or an assembly to detect damage, failure or irregularity. The examination is likely to make extensive use of specialized inspection techniques and/or equipment. Intricate cleaning and substantial access or disassembly procedure may be required.

Non-Destructive Testing (NDT) inspections are used to examine all subsurface damage and most small cracks. NDT is also used in areas where a visual inspection is not sufficient to find the dimensions of damage. NDT procedures recommended for use in the SRM are as follows:

(a) Eddy Current: An NDT procedure which uses eddy currents to find damage in metals that have good conductivity properties. The Eddy Current inspection is the preferred NDT procedure used to find most damage on metal parts. The three types of Eddy Current inspections used in the SRM are as follows:

High Frequency Eddy Current (HFEC) Inspection: Used to find surface cracks, porosity and corrosion.

Medium Frequency Eddy Current (MFEC) Inspection: Used to find subsurface cracks in the first layer, that start and grow along the faying surface. It also will detect surface cracks.

BOEING PROPRIETARY - Copyright © - Unpublished Work - See title page for details.

Low Frequency Eddy Current (LFEC) Inspection: Used to find subsurface cracks, and corrosion.

Refer to Part 6 of the NDT Manual for the Eddy Current inspection procedures.

(b) Ultrasonic: An NDT procedure which uses sound waves to find surface and subsurface damage (cracks, porosity, delamination, or disbonds, for example) on metal and composite materials that have good permeability properties. Refer to Part 4 of the NDT Manual for the Ultrasonic inspection procedures.

(c) Resonance Frequency: A tap test NDT procedure that can be used to find delaminations and interply disbonds in composite, honeycomb or bonded structures that have thin skin. Refer to Part 1 of the NDT Manual for the Resonance Frequency inspection procedures.

(d) X-Ray: An NDT procedure that uses radiography to find cracks and damage (disbonds, for example) in metallic and composite structures which cannot be accessed for visual inspection. X-Rays can identify if fluids are inside honeycomb parts and can be used to identify the dimensions of the damage. Refer to Part 2 of the NDT Manual for the X-Ray inspection procedures.

(e) Magnetic Particle: An NDT procedure that applies a magnetic field to a ferro-magnetic part which has fine magnetic particles on the surface. The magnetic field causes the magnetic particles to group together in areas that have cracks on or near the surface. Refer to SOPM 20-20-01 for the Magnetic Particle inspection procedures.

(f) Penetrant: Penetrant examination uses the property of a liquid to go into a defect that is open at the surface of the part. The liquid is applied to the surface and permitted to soak in. A developer is applied to pull the liquid out of the defect so it can be seen. Visible penetrants are examined under white light. Fluorescent penetrants are examined under ultraviolet light. Refer to SOPM 20-20-02 for the Penetrant inspection procedures.

BOEING PROPRIETARY - Copyright © - Unpublished Work - See title page for details.

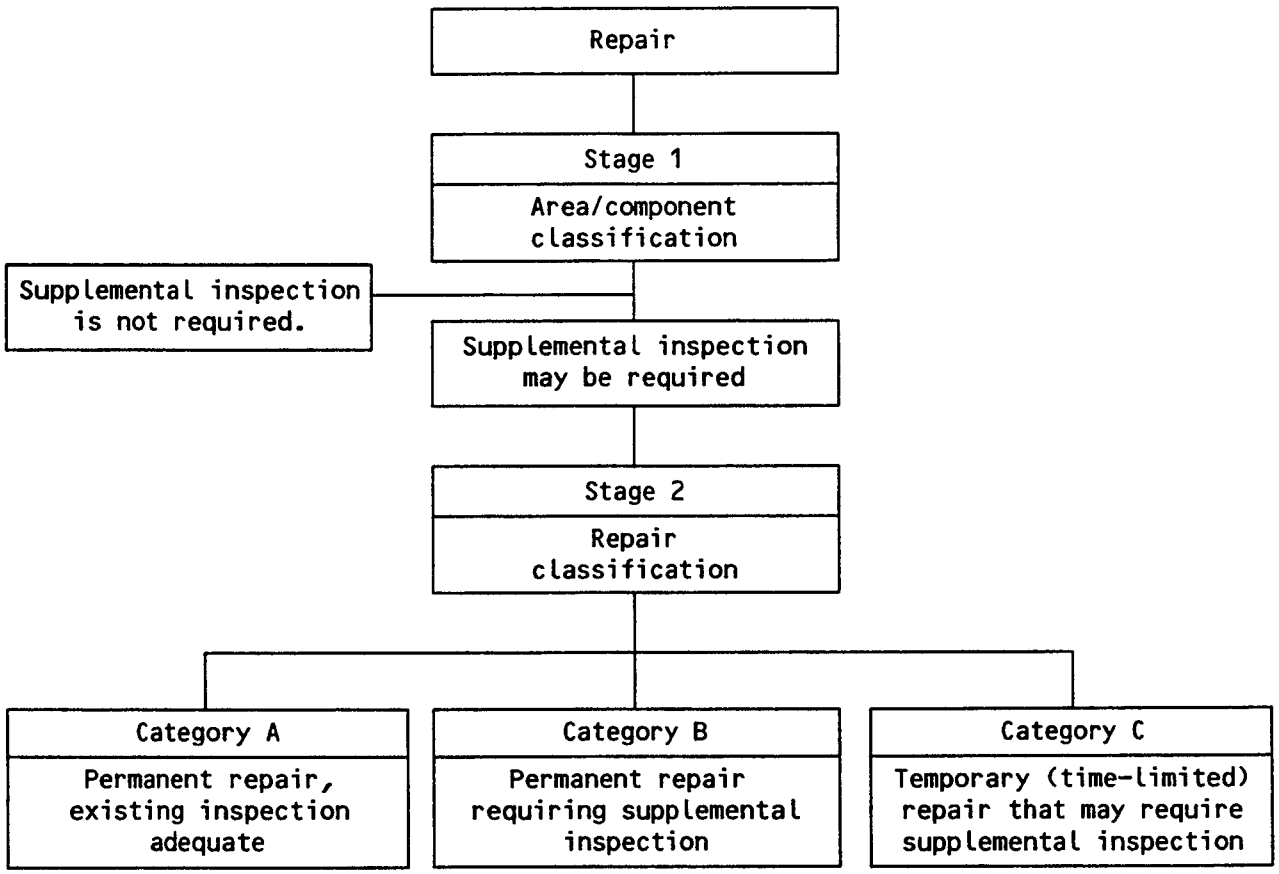

Process Diagram
Figure 1

INSPECTION AND REMOVAL OF DAMAGE

1. Applicability

   A. Use this chapter-section-subject for the investigation, inspection and removal of any type of damage to the airplane skin and structure.

   B. This chapter-section-subject also gives the general definitions for the types of damage that are given in the different chapters of this structural repair manual.

2. Damage Classification

   A. Make sure that you refer to the applicable chapter-section-subject for "Allowable Damage" in Chapters 52 through 57 of this structural repair manual for the correct rework limits and the specified shot peening data.

   B. Use your good judgement to find the type of damage and an estimate of the cross-sectional area changes by a visual inspection of a specified area.

      NOTE: Measure the damage or the combination of damage for both the correct depth and the correct length.

   C. In this structural repair manual, the term "damage" is defined as a cross-sectional area change or a permanent distortion of a structural member. Use the terms that follow:

      (1) "Allowable Damage" is defined as damage that is permitted with no other flight restrictions.

      (2) "Repairable Damage" is defined as damage that can be reworked or repaired.

      (3) "Replacement of Damaged Parts" is defined as damage where the part must be replaced.

   D. You must decide what type of damage has occurred to a structural member or to a structural material. The definitions of the different types of damage that can occur to the external skin of the airplane panels are given in the paragraphs that follow:

      (1) Abrasion: A damaged area that is the result of scuffing, rubbing, scraping, or other surface erosion. This type of damage is usually rough and has an irregular shape.

      (2) Corrosion: Damage that is the result of a complex electro-chemical action, and gives a cross-sectional area change. The depth of this damage must be determined by a cleanup or a removal operation. This type of damage occurs on the surfaces, hole bores, or edges of structural elements.

      (3) Crack: A partial fracture or a full break in the material that causes a significant cross-sectional area change. This damage usually has an irregular line and is often the result of fatigue in the material.

      (4) Crease: A damaged area that is depressed or folded back so that its boundaries are sharp or with well defined lines or ridges. Consider a crease to be equal to a crack.

BOEING PROPRIETARY - Copyright © - Unpublished Work - See title page for details.

(5) Delamination: A type of disbond that occurs between adjacent plies of material. If an allowable damage section or repair section does not give limits for disbonds, then use the limits specified for delaminations.

(6) Dent: A damaged area that is pushed in from its normal contour with no change in the cross-sectional area of the material. The edges of the damaged area are smooth. This damage is usually caused by a hit from a smoothly contoured object. The length of the dent is the longest distance from one end to the other end. The width of the dent is the second longest distance across the dent, measured at 90 degrees to the direction of the length.

NOTE: A dent-like form of damage to a panel area with a thick skin can be the possible result of the peening action of a smoothly contoured object. If the inner surface of skin shows no contour change, then the damage can be thought of as a local cross-sectional area change.

(7) Disbond: A disbond occurs when there is a separation between two or more plies of bonded material. Also a disbond occurs when there is a separation between a bonded skin and core. A disbond does not have to occur across the full surface. If an allowable damage section or repair section does not give limits for disbonds, then use the limits specified for delaminations.

(8) Gouge: A damaged area where the result is a cross-sectional change caused by a sharp object and gives a continuous, sharp or smooth groove in the material.

(9) Hole: A puncture or cut-out that is fully surrounded by undamaged material. Other types of damage can be removed by making an oversized hole or a hole that has an irregular shape, if this hole stays in the allowable damage limits or can be repaired with an approved procedure.

(10) Nick: A local gouge with sharp edges. You can consider a series of nicks in a line pattern to be equal to a gouge.

(11) Puncture: A puncture is damage that goes fully through a part thickness and has no regular shape. For example, a puncture can occur when a part is hit by a sharp object. A repair of the damage must be less than the allowable damage limits. Refer to the applicable chapters in the Structural Repair Manual for the allowable damage limits and the approved repair procedures.

(12) Scratch: A line of damage in the material where the result is a cross-sectional area change. This damage is usually caused by contact with a very sharp object.

3. Allowable Damage

A. Make sure that you refer to the applicable allowable damage chapter-section-subject in Chapter 52 thru 57 of this structural repair manual for the rework limits and the necessary shot peening data.

BOEING PROPRIETARY - Copyright © - Unpublished Work - See title page for details.

B. Some types of damage or distortion are permitted, with no flight restrictions if the damage condition can be corrected by a simple procedure. For example, damage that can be corrected when you smooth out nicks or gouges is called "Allowable Damage".

(1) The allowable damage limits for the major assemblies and component parts are defined in the applicable chapter-section-subject of this structural repair manual.

(2) The Boeing Company recommends that you use an optical micrometer with a tripod base to find the depth of the damage in the material.

(a) The data for the optical micrometer is as follows:
Optical Micrometer - Model Number 966A1
Manufactured by Monocle Industries
P.O. Box 2426
618 Hawk Lane
Coppell, Texas USA 75019
Telephone Number - (972) 393-9920

(b) As an alternative measurement system, you can use the tool that follows:
Scratch Measurement System
Measurement Systems, Inc.
2262 Northwest Parkway, Suite B
Marietta, Georgia USA 30067
Telephone Number - (770) 951-0878

C. Hidden cracks can be included with other types of damage, such as dents, nicks, gouges, scratches, cracks and punctures. Refer to the Nondestructive Test Manual NDT for the applicable non-destructive inspection method to find hidden cracks.

4. Procedures to Remove Nicks, Scratches and Gouges

A. Aluminum Metal Alloys

NOTE: It is possible to burnish damage that does not go all the way through the clad aluminum. Refer to Paragraph 15.H. for the clad penetration test. Refer to Paragraph 5 for burnishing requirements and procedures.

CAUTION: DO NOT USE A CARBON STEEL BRUSH OR STEEL WOOL ON ALUMINUM METAL SURFACES.

IF YOU DO NOT OBEY, THEN TINY DISSIMILAR METAL PARTICLES WILL BECOME IMBEDDED IN THE SURFACE OF THE METAL. THIS CAN CAUSE CORROSION AND MORE DAMAGE TO THE PART.

(1) Abrade all of the paint film in the damaged area to make a smooth surface.

BOEING PROPRIETARY - Copyright © - Unpublished Work - See title page for details.

CAUTION: COMPLETE DAMAGE REMOVAL IS NECESSARY TO ESTABLISH APPROPRIATE REPAIR ACTIONS AND TO AVOID DEVELOPMENT OF FATIGUE CRACKING. DAMAGE THAT IS NOT COMPLETELY REMOVED CAN BE REDUCE THE FATIGUE STRENGTH OF THE PART, WHICH CAN RESULT IN CRACKING. IN EXTREME CASES, UNDETECTED FATIGUE CRACKING COULD COMPROMISE STRUCTURAL INTEGRITY.

(2) Use the abrasives given in Fig. 5 to blend out the damaged area.

(3) After you complete the surface rework, then you must use an applicable nondestructive test procedure to make sure that the area does not have cracks.

WARNING: DO NOT GET SOLVENTS IN YOUR MOUTH, YOUR EYES, OR ON YOUR SKIN. DO NOT BREATHE THE FUMES FROM SOLVENTS. SOLVENTS ARE DANGEROUS MATERIALS. SOLVENTS CAN BE FLAMMABLE OR CAUSE DAMAGE TO THE ENVIRONMENT. REFER TO THE MATERIAL SAFETY DATA SHEETS (MSDS) AND THE LOCAL SAFETY PRECAUTIONS.

(4) Clean the damaged area with a soft cloth moist with cleaning solvent. Refer to SOPM 20-30-03 for the applicable cleaning solvent and general cleaning procedures.

(5) Apply a protective treatment and primer to the base metal surface as given in SRM 51-10-2.

(6) If necessary, apply a decorative finish to the area. Refer to AMM 51-21.

B. Titanium:

WARNING: USE CARE WHEN YOU REWORK TITANIUM. SMALL PARTICLES AND FINE SHAVINGS OF TITANIUM ARE HIGHLY FLAMMABLE. TITANIUM DUST IS HIGHLY FLAMMABLE AND CAN CAUSE AN EXPLOSION. WATER WITH HOT TITANIUM CAN CAUSE A STEAM EXPLOSION.

EXTINGUISH ALL FIRES OF TITANIUM WITH FULLY DRY TALC, CALCIUM CARBONATE, SAND OR GRAPHITE. APPLY THE POWDER TO A DEPTH OF 1/2 INCH OR MORE OVER THE BURNING METAL. DO NOT USE FOAM, WATER, CARBON TETRACHLORIDE, OR CARBON DIOXIDE. IF YOU DO NOT OBEY, YOU CAN CAUSE INJURY TO PERSONS.

BOEING PROPRIETARY - Copyright © - Unpublished Work - See title page for details.

(1) Clean up the damage by sanding manually or with power tools. Do not use a mechanical grinder. Use cloth, or paper backed silicon carbide or aluminum oxide abrasive that is 80 grit or finer. Wet sanding is the recommended procedure. As an alternative, use stainless steel wool or pumice (350 mesh or finer). Make an abrasive finish as follows:

(a) Select the abrasive as given in Fig. 5.

(b) Use supporting disks for disk sanders that are made from rubber or other flexible material.

(c) If applicable, use support drums for drum sanders that have an outer layer of rubber or other flexible material that is 0.10 inch (2.54 mm) thick.

(d) Do not use too much pressure, dwell time, or speed (2000 surface feet per minute, maximum).

(e) Parts that show discoloration that can not be removed with Series 80 solvent, must be rejected. Refer to SOPM 20-30-80 for applicable solvents.

(f) Make the surface finish to 32 microinches Ra or smoother.

(g) When you remove damage on an edge, make the direction of the marks made by the tools to be parallel to the edge.

C. Magnesium

WARNING: USE CARE WHEN YOU REWORK MAGNESIUM. SMALL PARTICLES AND FINE SHAVINGS OF MAGNESIUM ARE HIGHLY FLAMMABLE. MAGNESIUM DUST IS HIGHLY FLAMMABLE AND CAN CAUSE AN EXPLOSION. WATER WITH HOT MAGNESIUM CAN CAUSE A STEAM EXPLOSION.

EXTINGUISH ALL FIRES OF MAGNESIUM WITH FULLY DRY TALC, CALCIUM CARBONATE, SAND OR GRAPHITE. APPLY THE POWDER TO A DEPTH OF 1/2 INCH OR MORE OVER THE BURNING METAL. DO NOT USE FOAM, WATER, CARBON TETRACHLORIDE, OR CARBON DIOXIDE. IF YOU DO NOT OBEY, YOU CAN CAUSE INJURY TO PERSONS.

CAUTION: DO NOT USE CARBON STEEL BRUSH OR STEEL WOOL ON MAGNESIUM SURFACES. TINY DISSIMILAR METAL PARTICLES WILL BECOME IMBEDDED IN THE MAGNESIUM CAUSING FURTHER CORROSION AND SUBSEQUENT DAMAGE TO PART.

DO NOT USE SILICON CARBIDE ABRASIVES ON MAGNESIUM SURFACES.

(1) Identify the material as magnesium.

(2) Fully clean the damaged area.

(3) Sand all of the paint film in the damaged area to make a smooth surface.

NOTE: Sand down through the metal surface, as necessary, to remove all of the damage.

BOEING PROPRIETARY - Copyright © - Unpublished Work - See title page for details.

(4) Do an inspection to measure the damage.

(a) Do a visual inspection with a 10-power magnifying glass to make sure all of the damage was removed.

(b) If, after the above visual inspection, you think there could be more damage below the surface, then do an eddy current inspection or a penetrant inspection on the repair area.

(c) To find damage below the surface, refer to Part 1, 51-06-00, and Part 6, 51-00-00 of the NDT Manual for eddy current inspections. Refer to SOPM 20-20-02 for the penetrant inspections.

(d) All of the damage must be removed. Repeat this inspection procedure until no more damage can be found by these inspection procedures.

(5) After all of the damage is removed, apply a protective treatment to the bare metal surface as given in SOPM 20-43-02.

D. Metallic and Non-Metallic Composite Materials

(1) For the cleanup of damage for Aramid Fiber, Carbon Fiber, Glass Fiber and Hybrid Fiber composite structures, refer to the allowable damage section in the component section of the specified chapter-section-subject.

(2) Refer to SRM 51-10-7 for specific machining methods of non-metallic composite materials.

(3) Also to refer to Fig. 6 for recommended methods when a band saw is used on metallic and non-metallic honeycomb core materials.

5. Burnishing

A. Unless the allowable damage section specifies differently, burnishing is a procedure that you can use to remove small nicks, scratches, and gouges in an unpainted, clad aluminum surface.

(1) Refer to Paragraph 15.H. for the clad penetration test.

(2) You can burnish clad aluminum surfaces of secondary structure if the damage does not go through the clad. It is not necessary to do supplemental inspections or to record the location of the damage. If the damage goes through the clad aluminum, refer to the applicable allowable damage section for the instructions to remove the damage.

BOEING PROPRIETARY - Copyright © - Unpublished Work - See title page for details.

(3) You can burnish clad aluminum surfaces of primary structure if the damage agrees with the conditions in Figure 7.

NOTE: If Figure 7 does not let you burnish the damage, you can do one of the alternatives that follow:

- Get an inspection plan from Boeing, or
- Refer to the SRM allowable damage and repair sections, or
- Replace the part.

(a) Burnished areas that agree with the conditions in Figure 7 can be inspected at intervals specified in the airline maintenance planning data. It is not necessary to do supplemental inspections or to record the location of the damage.

(b) Remove damage that goes through the clad aluminum as given in the applicable allowable damage or repair sections. Refer to Paragraph 4.A.

B. To burnish an area with a small defect:

WARNING: DO NOT GET SOLVENTS IN YOUR MOUTH, YOUR EYES, OR ON YOUR SKIN. DO NOT BREATHE THE FUMES FROM SOLVENTS. SOLVENTS ARE DANGEROUS MATERIALS. SOLVENTS CAN BE FLAMMABLE OR CAUSE DAMAGE TO THE ENVIRONMENT. REFER TO THE MATERIAL SAFETY DATA SHEETS (MSDS) AND THE LOCAL SAFETY PRECAUTIONS.

(1) Clean the damaged area with a soft cloth moist with cleaning solvent. Refer to SOPM 20-30-03 for the applicable cleaning solvent and general cleaning procedures.

(2) Use an ST990, ST994 or equivalent burnishing tool.

(3) Put a petroleum jelly lubricant (or equivalent) on the area to be burnished.

(4) Rub along the sides of the defect while you push the clad aluminum to the center of the damaged area.

(5) Stay at less than 0.25 inch (6 mm) from the edge of the damage while you push on the clad aluminum.

(6) Gradually decrease the pressure until the burnished area is smooth.

(7) Remove the lubricant from the aluminum.

(8) Clean and then apply a chemical conversion coating to the bare metal of the skin. Refer to SRM 51-10-2.

BOEING PROPRIETARY - Copyright © - Unpublished Work - See title page for details.

6. Damage That Can Be Repaired

A. Unless the repair procedure is specified as a temporary repair, all of the repair procedures in this structural repair manual are permanent repairs. It is not necessary for permanent repairs to have more aircraft inspections other than the specified maintenance inspections given by the FAA regulations.

CAUTION: DURING A REPAIR PROCEDURE, YOU MUST USE EXTREME CARE TO MAKE SURE THAT THE DRAIN HOLES HAVE NOT BEEN COVERED BY REPAIR PARTS. ALSO, THE DRAIN HOLE LOCATIONS MUST NOT BE REMOVED DURING THE REMOVAL OF THE DAMAGED AREA. WHEN YOU DO A REPAIR, THE DRAIN HOLES MUST BE KEPT IN THEIR INITIAL POSITIONS, IF POSSIBLE. ALL REPAIR FASTENERS MUST BE SPACED CORRECTLY, SO THAT YOU CAN INSTALL DRAIN HOLES INTO THE REPAIR PARTS.

B. Make repairs to:

(1) Repairable external surface damage by an external or a flush type repair as given in para. C. and D. below.

(2) Repairable internal region damage as applicable in repairs that are called out in repair procedures throughout this manual.

C. An external repair is a repair that can be applied quickly. It is used to keep airplane down-time to a minimum. It is usually a field oriented type repair, as opposed to a repair that is done in a shop. This type of repair protrudes in relationship to a damaged aerodynamic surface. You can replace this type of repair if necessary for appearance or aerodynamic reasons. Refer to par. D. below.

D. A flush repair is a repair that can be used to replace an external repair as described in par. B. above. It is normally a shop type procedure, opposite a field oriented type repair. This type of repair is flush in relationship to a damaged aerodynamic surface.

E. The repair types given in par. C. and D. above are structural equivalents of each other for static strength. The operator has the option to use either type for a structurally airworthy, FAA approved repair. Some repairs are designed so that fastener holes that are made during a field type repair can be used for a subsequent shop type repair.

NOTE: The performance of the airplane can be affected by external type repairs made in aerodynamic critical areas. Refer to SRM 51-70.

F. All of the other repairs that are given in this manual that cover internal metal structural components:

(1) Are structurally airworthy

(2) Are FAA approved for the service life of the airplane

(3) Can be flush or external type of repairs.

BOEING PROPRIETARY - Copyright © - Unpublished Work - See title page for details.

G. Category B (Interim) and Category C (Time-Limited) repairs.

(1) Refer to SRM 51-00-6 for the correct definitions of these types of repairs.

(2) Category B and interim repairs can stay on the airplane indefinitely, if you find that there are no signs of deterioration of the repair area during regular supplemental maintenance inspections.

(a) Interim repairs must be inspected at specified intervals and replaced if any deterioration is evident. These times are usually defined as flight hours, flight cycles or letter checks. The letter checks are different from model to model for Boeing airplanes. The letter checks are specified in the Maintenance Planning Data document.

(b) The repairs are FAA approved contingent on the accomplishment of inspections at the intervals specified in this document.

(3) Category C (Time-Limited) types of repairs given in this manual are temporary repairs. These types of repair designations can provide a practical solution to a specific repair problem.

(a) Time-limited repairs must be replaced after a specified time with a permanent repair. These times are usually defined as flight hours, flight cycles or letter checks. The letter checks are different for different models of Boeing airplanes. The letter checks are specified in the Maintenance Planning Data document. Periodic inspection requirements may be imposed to ensure the integrity of the repair.

(b) These repairs are FAA approved contingent on the accomplishment of inspections at the intervals specified and the installation of a permanent repair by a specified time.

(4) The SRM contains some allowable damage and repairs that use letter checks to define when a subsequent inspection and repair must be done. Examples are "A" check or "C" check. If an operator does not use letter checks or divides letter checks into segments, an equivalent time interval to the letter checks must be used. Refer to the Airline Maintenance Inspection Intervals document, D6-26100.

Example: An operator divides a "C" check into four segments (Segments 1 through 4). During segment 2, damage that is found must be repaired by the next "C" check as given in the SRM. Thus, the damage must be repaired by segment 2 of the next "C" check interval.

7. Replacement of the Part

A. The option to replace a part is given when the repair of the component is not a recommended solution.

(1) Sometimes, the amount of damage to the part will make it necessary to replace it.

(2) These situations are specified in the different allowable damage and repair chapter-section-subjects given in this manual.

BOEING PROPRIETARY - Copyright © - Unpublished Work - See title page for details.

B. The repair procedures specified in Chapters 52 through 57 give the approved repairs for the repairable structural items.

C. The structural items that do not have entries are called repairable by replacement.

8. Repair of Damage that is more than the Allowable Damage Limits

NOTE: Refer to the repair sections in Chapters 51-70 and 52 through 57 to see if more applicable repair instructions are available.

A. Remove the initial finish as necessary to apply a sealant or to apply a protective treatment to the surface.

B. Remove the damaged components to be replaced and the damaged areas to be repaired.

NOTE: Use the router and template (refer to Fig. 2), or the hole saw (refer to Fig. 3), to cut circular holes in aluminum honeycomb or fiberglass structure.

C. Remove all the nicks, scratches, burrs, and sharp edges from repair parts and the surfaces of the initial parts as given in this chapter-section-subject.

D. Apply a chemical conversion coating to the surfaces or edges of the initial aluminum parts and the aluminum repair parts as given in SRM 51-10-2.

E. Apply the protective finish as necessary to the initial and repair parts.

F. Determine the sealing level and the type of sealing procedures necessary. Refer to SRM 51-20-4 for sealant materials and substitute sealant materials.

(1) For external surfaces when access is limited, seal the mating surfaces with the sealant materials that follow:

(a) For pressure requirements, use BMS 5-95.

(b) For high temperature requirements, use BMS 5-63.

(c) For moisture protection requirements, use BMS 5-95.

NOTE: You can use the squeegee shown in Fig. 4 to apply the sealant.

(2) For flush repairs on external surfaces when access is available to the pressurized side, use the fillet seal and fastener seal procedures. Use mating surface sealants for flush repairs when access is limited or not available. Apply fillet and fastener sealants with the sealant materials that follow:

(a) For integral tank requirements, Use BMS 5-26 or BMS 5-45 (Refer to SRM 51-20-4).

(b) For pressure requirements, use BMS 5-70 or BMS 5-95.

(c) For high temperature requirements, use BMS 5-63 (Refer to SOPM 20-60-04).

(d) For moisture requirements use BMS 5-95.

BOEING PROPRIETARY - Copyright © - Unpublished Work - See title page for details.

G. Make the Repair Parts

(1) Refer to the specified chapter-section-subject to make the repair parts.

(2) Refer to Fig. 5 to machine the metallic or non-metallic honeycomb core parts.

H. Prepare the mating surfaces for the installation of the repair parts.

(1) For external repairs;

(a) Clean the mating surfaces.

(b) Apply the correct sealant material as given in par. F. above.

(c) Install the repair parts.

(d) Install the necessary fasteners. Refer to SRM 51-30-2.

(e) Apply the protective finish if necessary as given in AMM 51-21-10.

(2) For flush repairs;

(a) Clean the mating surfaces.

(b) Apply the adhesive to the mating surfaces. You can use the squeegee shown in Fig. 4.

(c) Install the repair parts.

(d) Apply the necessary fillet seal and the sealant to the fasteners.

(e) Apply the aerodynamic smoother (BMS 5-95) to the gaps as necessary in the aerodynamically critical areas.

(f) Apply the protective finish as necessary. Refer to AMM 51-21-10.

I. Do the other necessary post repair checks.

(1) Balance the control surfaces again as necessary. Refer to SRM 51-80.

9. Hole Preparation for Repairs

CAUTION: USE SUFFICIENT PRECAUTIONS TO MAKE SURE THAT SYSTEM COMPONENTS, AIRPLANE ELECTRICAL WIRES AND STRUCTURES, ARE NOT DAMAGED BY DRILLS, METAL SHAVINGS AND OTHER CONTAMINATION WHILE YOU DO WORK. METAL SHAVINGS OR CONTAMINATION LEFT IN THE AIRPLANE CAN TOUCH WIRE BUNDLES AND CAUSE CHAFING DAMAGE TO ELECTRICAL WIRES. CHAFFED WIRES CAN CAUSE ARCING DAMAGE.

A. Drilling a Fastener Hole in Metal Structure

(1) Refer to SRM 51-30-5 for fastener hole sizes.

BOEING PROPRIETARY - Copyright © - Unpublished Work - See title page for details.

(2) All of the repair procedures given in the manual strongly recommend that you use properly sized and properly maintained drills and drill bits.

(3) When necessary to prepare a hole, use a bushing tool as a guide to obtain a hole that is not larger than the drill size. Also use the bushing tool to hold the drill perpendicular to the repair surface.

(4) Use the correct drill speed, in feet per minute, which will give a smooth, bright finish throughout the hole surface.

(5) If the hole has a rough or galled surface, then manually hand-ream the hole until the inside surface is smooth.

(6) You must follow the recommendations given in the repair procedures, so that the repairs and preventative modifications will stay on the airplane during its service life.

B. Removal of Small Cracks and Fatigue Damaged Material from an Existing Hole (Zero-Timing)

(1) This procedure is recommended for the initial fastener holes before a repair part is installed. Zero-Timing makes the repair durability better. If this procedure is done for all existing fastener holes in the critical rows of the repair (which are usually the perimeter fasteners of the repair doubler in a skin repair) then the inspection threshold will start from the time of repair installation. If not, then the threshold starts from the time the airplane was delivered.

(2) Visually inspect all of the existing holes for irregular surface conditions such as burrs, galling, corrosion and out-of-round holes. These irregular surface conditions can interfere with the High Frequency Eddy Current (HFEC) inspection. For this reason you can use a Borescope, an Endoscope or other types of optical aids to help the visual inspection.

NOTE: If a "clean-up" is necessary to remove one or more of these conditions, ream the hole to 1/64 inch oversize from its existing size. A surface finish of 125 Microinches Ra or better is necessary.

(3) Inspect the fastener hole by the HFEC method. Refer to Part 6, 51-00-00 of the NDT Manual for the inspection of the open hole.

(a) If no cracks are found, make the hole diameter 1/16 inch oversize to remove any fatigue damaged material.

(b) If cracks are found, make the hole diameter larger by 1/64 inch increments until HFEC inspection shows no more cracks. Then, make the hole another 1/16 inch Larger to remove any fatigued damaged material.

NOTE: The limit to make the hole larger is different for each situation and depends on the load pattern and the stress levels in the rework area. Sometimes, it may be necessary to install a plug through which a fastener that is the same size as the initial fastener can be installed. Refer to SRM 51-10-9 for freeze plug installation.

BOEING PROPRIETARY - Copyright © - Unpublished Work - See title page for details.

(4) Ream the hole, as necessary, to the finished size for installation of the fastener or the plug.

(5) If coldworking is necessary, ream the hole to the correct size and do the coldworking procedure.

10. Procedure for Stop-Drilling of Cracks

NOTE: Stop drilling a crack prevents its growth. You can use this procedure for stop-drilling of crack, only if it is referred to in the applicable allowable damage or repair chapter-section-subject or other approved repairs.

If this procedure for stop-drilling of cracks is not referred to in the applicable allowable damage or repair procedure or other approved repairs then all of the cracks must be cut out and a repair for the cutout must be done.

A. The correct procedure for stop drilling a crack is as follows:

(1) Drill or counterbore a 0.25 inch stop hole through the structure at each end of the crack. Drill the hole in a position so that the center of the hole is 0.10 inch past the visible end of the crack.

(2) Do an HFEC inspection of each drilled stop hole. Refer to Part 6, 51-00-00 of the NDT manual for the inspection of the open hole. Make sure that there are no more cracks on the side opposite from the initial crack.

(a) If a crack is not found, make the hole 1/16 inch in diameter larger to remove any fatigue damaged material.

(b) If a crack is found, make the hole larger by 1/64 inch increments until no crack remains. Then, make the hole another 1/16 inch larger to remove any fatigue damaged material.

NOTE: The limit to make the hole larger is different for each situation and depends on the load pattern and the stress levels in the rework area.

(c) In aluminum structures, install a 2017-T3 or 2017-T4 aluminum plug rivet into the stop-holes, if necessary.

(d) In titanium, corrosion-resistant steel (CRES), and inconel structures, install a monel plug rivet into the stop-holes, if necessary.

11. Missing or Loose Fasteners in Secondary Structure

A. Refer to SRM 51-10-10 to see if it's possible to operate an airplane with missing fasteners in secondary structure.

BOEING PROPRIETARY - Copyright © - Unpublished Work - See title page for details.

12. Corrosion Damage and Rework Limits

NOTE: Make sure that you refer to the applicable allowable damage chapter-section-subject for the rework limits and the necessary shot peening.

A. Corrosion evaluation will be necessary after you do an initial inspection and cleaning procedure to determine the nature and the extent of repair or rework.

B. Examine the corrosion to make an analysis of the damage. It is difficult to give a distinct and specific dividing line between the various conditions. Thus, the first requirement for evaluation of corrosion damage is good and sound maintenance judgement. Evaluate corrosion as follows:

(1) Light corrosion: A discoloration or pitting to a depth of approximately 0.001 inch maximum. This type of damage is normally removed with light sanding by hand or a mild chemical treatment.

(2) Moderate corrosion: Almost the same as Light corrosion, but there can be evidence of flaking, scaling, or blistering. Pitting can be to the depth of 0.010 inch. This type of damage is normally removed by vigorous manual sanding or by using mechanical sanding equipment.

(3) Severe corrosion: More severe than moderate corrosion. There is evidence of severe blistering, exfoliation, and scaling or flaking. Pitting is deeper than 0.010 inch. This type of damage is removed by hard mechanical sanding or grinding.

C. For corrosion damage, it is necessary to do rework to the damaged area, to find the penetration depth of the damage into a structural member, before you can establish its classification as allowable damage or damage requiring repair.

D. All corrosion products must be removed completely when corroded structures are reworked as the corroding process will continue even though the affected surface is refinished.

13. Corrosion Damage Removal Procedure and Inspection

A. Aluminum, Steel, and Tungsten

NOTE: Make sure that you refer to the applicable allowable damage chapter-section-subject for the rework limits and the necessary shot peening.

(1) Remove all the sludge or powdery material you find in the integral fuel tank area as given in AMM 28-11-0.

CAUTION: WHEN YOU MAKE THE SURFACE ROUGH ON STEEL, MAKE SURE THAT YOU CHANGE THE SPEED AND THE FEEDS TO PREVENT HEAT OR SPARKS. DO NOT PERMIT THE SURFACE TEMPERATURE TO BE MORE THAN WHAT YOU CAN TOUCH WITH YOUR BARE SKIN. IF YOU DO NOT OBEY, YOU CAN CAUSE DAMAGE TO THE PART.

BOEING PROPRIETARY - Copyright © - Unpublished Work - See title page for details.

(2) To remove the corrosion, use a rotary file, a rubber-backed disc sander, a carbide-tipped scraper, or aluminum oxide abrasive as necessary. Refer to Fig. 5 to find the permitted abrasives. Use air motors for all of the power tools. Refer to Fig. 1 for the tools that are permitted for use.

NOTE: As an alternative, you can use the glass bead blasting procedure to remove filiform corrosion from aluminum clad skins. Do not use glass bead blasting to remove other corrosion on aluminum. Refer to the Corrosion Prevention Manual (CPM) Part 1, 20-40-00.

(3) Make a group of several corrosion spots in a local area so that you have an elliptical-shaped rework surface.

(4) Carefully blend the edges into the adjacent areas. Make the rework surface equal to 125 microinches Ra or smoother, unless a different surface smoothness is specified in the component repair section.

(5) Do an inspection for damage caused by corrosion.

CAUTION: ALL CORROSION MUST BE REMOVED TO PREVENT FURTHER CORROSION DAMAGE AND TO ESTABLISH THE APPROPRIATE REPAIR ACTION. CORROSION THAT IS NOT FULLY REMOVED WILL CONTINUE TO PROPAGATE EVEN IF THE PART IS REFINISHED. IN EXTREME CASES, CONTINUED CORROSION PROPAGATION COULD COMPROMISE STRUCTURAL INTEGRITY.

(a) Do a visual inspection with a 10-power magnifying glass to make sure all of the corrosion was removed and to find possible cracks. You can remove an additional 0.002 inch of material as given in CPM 20-40-00 to make sure that the corrosion has been fully removed. Alternatively, for aluminum structure where the corrosion has attacked the grain boundary of the material, the use of a dye penetrant inspection as given in SOPM 20-20-02 will assist in detecting intergranular corrosion that could have been hidden by the blending process.

(b) If, after the above visual inspection, you think there could be cracks, do an eddy current inspection or a penetrant inspection on the repair area. Refer to the applicable Corrosion Preventive Manual for additional data.

NOTE: If the allowable damage or repair subject that refers to this chapter-section-subject for corrosion removal, and the subject has a requirement for the inspection for cracks, then do the eddy current inspection or penetrant inspection.

(c) Refer to Part 1, 51-06-00 and Part 6, 51-00-00 of the NDT Manual for eddy current inspections. Refer to SOPM 20-20-02 for the penetrant inspections.

(d) All of the corrosion and all of the cracks must be removed. Repeat the applicable corrosion damage removal procedure and inspection, until no more corrosion or cracks can be found by these inspection procedures.

BOEING PROPRIETARY - Copyright © - Unpublished Work - See title page for details.

WARNING: USE CARE WHEN YOU REWORK MAGNESIUM. SMALL PARTICLES AND FINE SHAVINGS OF MAGNESIUM ARE HIGHLY FLAMMABLE. MAGNESIUM DUST IS HIGHLY FLAMMABLE AND CAN CAUSE AN EXPLOSION. WATER WITH HOT MAGNESIUM CAN CAUSE A STEAM EXPLOSION.

EXTINGUISH ALL FIRES OF MAGNESIUM WITH FULLY DRY TALC, CALCIUM CARBONATE, SAND OR GRAPHITE. APPLY THE POWDER TO A DEPTH OF 1/2 INCH OR MORE OVER THE BURNING METAL. DO NOT USE FOAM, WATER, CARBON TETRACHLORIDE, OR CARBON DIOXIDE. IF YOU DO NOT OBEY, YOU CAN CAUSE INJURY TO PERSONS.

CAUTION: MAGNESIUM IS THE MOST CHEMICALLY ACTIVE METAL THAT IS USED TO BUILD AIRPLANES, AND IT IS THE MOST DIFFICULT TO PROTECT FROM CORROSION. IF A LOSS IN THE PROTECTIVE COATING OCCURS, YOU MUST ACT IMMEDIATELY TO PREVENT FURTHER CORROSION. IF YOU DO NOT OBEY, THE RESULT CAN BE SERIOUS STRUCTURAL DAMAGE.

DO NOT USE SILICON CARBIDE ABRASIVES ON MAGNESIUM SURFACES. DO NOT USE A CARBON STEEL BRUSH OR STEEL WOOL ON MAGNESIUM SURFACES. TINY DISSIMILAR PARTICLES WILL BECOME IMBEDDED IN THE MAGNESIUM CAUSING FURTHER CORROSION AND SUBSEQUENT DAMAGE TO THE PART.

B. Magnesium:

(1) Identify the material as magnesium.

NOTE: You can find corrosion in magnesium easily. When the corrosion begins, its products can be several times larger than the initial volume of the magnesium metal. The corrosion starts with a separation of the paint film, and as white spots on the surface of the metal which can quickly grow into mound that look like snow.

You must fully remove the corrosion and apply a chemical treatment and restore the protective coating.

(2) Fully clean the damaged area.

(3) If necessary, remove the paint.

(4) Find the type of corrosion damage and remove it. Refer to par. 4.

(a) Refer to par. B.(5) to remove light corrosion damage.

(b) Refer to par. B.(6) to remove moderate to severe corrosion damage.

(5) Remove the "light corrosion damage" as follows:

BOEING PROPRIETARY - Copyright © - Unpublished Work - See title page for details.

CAUTION: DO NOT USE THIS PROCEDURE FOR:

- ADHESIVE BONDED PARTS OR ASSEMBLIES
- AREAS WHERE THE BRUSH-ON SOLUTION CAN BECOME TRAPPED
- AREAS THAT WERE MADE BARE BY GRINDING FOR ELECTRICAL BONDING

IF YOU DO NOT OBEY, DAMAGE TO THE ADHESIVE SYSTEMS CAN OCCUR.

(a) Remove the loose corrosion with aluminum wool.

(b) Do an inspection for damage caused by corrosion.

1) Do a visual inspection with a 10-power magnifying glass to make sure all of the corrosion was removed and to find possible cracks.

2) If, after the above visual inspection, you think there could be cracks, do an eddy current inspection or a penetrant inspection on the repair area. Refer to the applicable Corrosion Preventive Manual for additional data.

NOTE: If the allowable damage or repair subject that refers to this chapter-section-subject for corrosion removal, and the subject has a requirement for the inspection for cracks, then do the eddy current inspection or penetrant inspection.

3) Refer to Part 1, 51-06-00 and Part 6, 51-00-00 of the NDT Manual for eddy current inspections. Refer to SOPM 20-20-02 for the penetrant inspections.

4) All of the corrosion and all of the cracks must be removed. Repeat the applicable corrosion damage removal procedure and inspection, until no more corrosion or cracks can be found by these inspection procedures.

(c) Isolate other parts such as rubber parts, bearings, and cast or pressed inserts from the treating solution and its fumes.

(d) Immediately after all damage is removed, apply DOW 17 (preferred), or DOW 19 (alternative) as given in SOPM 20-43-02.

(e) Apply two layers of BMS 10-11, Type I primer. Refer to SOPM 20-41-02.

(f) Apply two layers of BMS 10-60, Type I or Type II enamel.

(6) Remove "moderate to severe corrosion damage" as follows:

WARNING: WEAR PROTECTIVE GOGGLES OR A FACE SHIELD WHEN YOU REMOVE THE CORROSION. IF YOU DO NOT OBEY, THE RESULT CAN BE INJURY TO PERSONNEL.

BOEING PROPRIETARY - Copyright © - Unpublished Work - See title page for details.

CAUTION: DO NOT USE CARBON STEEL WIRE BRUSHES OR SILICON CARBIDE ABRASIVES ON MAGNESIUM. USE CARE NOT TO CAUSE OTHER DAMAGE FROM THE CORROSION PRODUCTS TO THE AREAS ADJACENT TO THE DAMAGE. IF YOU DO NOT OBEY, YOU CAN CAUSE MORE DAMAGE TO THE PARTS.

(a) Remove the heavy corrosion products with a stainless steel wire brush.

(b) Remove the remaining corrosion by sanding. Use the applicable abrasive as given in Fig. 5.

(c) Do an inspection for damage caused by corrosion.

1) Do a visual inspection with a 10-power magnifying glass to make sure all of the corrosion was removed and to find possible cracks.

2) If, after the above visual inspection, you think there could be cracks, do an eddy current inspection or a penetrant inspection on the repair area. Refer to the applicable Corrosion Prevention Manual for additional data.

NOTE: If the allowable damage or repair subject that refers to this chapter-section-subject for corrosion removal, and the subject has a requirement for the inspection for cracks, then do the eddy current inspection or penetrant inspection.

3) Refer to Part 1, 51-06-00 and Part 6, 51-00-00 of the NDT Manual for eddy current inspections. Refer to SOPM 20-20-02 for the penetrant inspections.

4) All of the corrosion and all of the cracks must be removed. Repeat the applicable corrosion damage removal procedure and inspection, until no more corrosion or cracks can be found by these inspection procedures.

CAUTION: APPLY PROTECTION TO THE BARE MAGNESIUM SURFACE. CORROSION BEGINS WITH THE SEPARATION OF THE PAINT FILM FROM THE METAL.

(d) Immediately after all damage is removed, apply DOW 17 (preferred), or DOW 19 (alternative) as given in SOPM 20-43-02.

(e) Apply two layers of BMS 10-11, Type I to the reworked area. Refer to SOPM 20-41-02.

(f) Apply two layers of BMS 10-60, Type I or Type II enamel.

BOEING PROPRIETARY - Copyright © - Unpublished Work - See title page for details.

14. Safety Procedures for Working with Chemicals

NOTE: Paragraph A contains the general safety precautions, which contain specific rules for handling chemicals with hazardous physical properties.

Paragraph B contains emergency procedures for the immediate treatment of personnel who have inadvertently come into contact with one of the harmful chemicals.

Chemicals having hazardous physical properties are given in the manufacturer's safety precautions and emergency safety procedures.

All personnel that use or handle hazardous chemicals must fully know the safety data contained in the paragraphs that follow.

A. General Safety Precautions

(1) When it is necessary to use or handle any of the solvents, special cleaners, paint strippers (strong alkalies and acids), etchants (corrosion removers containing acids), or surface activation material (chemical conversion coatings), you must obey the safety precautions that follow:

(a) Avoid long term breathing of solvents or acid vapors. Do not use solvents and acids in confined spaces without sufficient ventilation or approved respiratory protection.

(b) Never add water to acid. Always add acid to water.

(c) Do not mix chemicals except as given in a specified mixing procedure.

(d) Clean water that you use for emergencies must be available in the immediate work area before you work with chemicals.

(e) Avoid long term or repeated contact of solvents, cleaners, etchants (acid), or chemical conversion coating material with skin.

1) Rubber or plastic gloves must be worn when you use solvents, cleaners, paint strippers, etchants, or conversion coating materials.

2) Goggles or plastic face shields and suitable protective clothing must be worn when cleaning, stripping, etching, or applying a conversion coating to overhead surfaces.

(f) When you mix alkalies with water or other substance, use containers which are made to withstand heat generated by this process.

(g) Wash any paint stripper, etchant, or conversion coating material immediately from body skin or clothing.

(h) Materials splashed in the eyes must be immediately flushed out with water. Get immediate medical aid for the injured personnel.

BOEING PROPRIETARY - Copyright © - Unpublished Work - See title page for details.

(i) Do not eat or keep food in areas where it can absorb toxic poisons. Always wash your hands before eating or smoking.

(j) All equipment must be cleaned after work has been completed.

(k) Implement all company specified safety precautions in your work area.

B. Emergency Safety Procedures

WARNING: PERSONNEL MUST BE THOROUGHLY FAMILIAR WITH THE FOLLOWING EMERGENCY SAFETY PROCEDURES BEFORE THEY CAN USE ANY MATERIALS WHICH ARE REFERENCED IN ANY EMERGENCY SAFETY PROCEDURE PARAGRAPHS.

(1) If one or more persons are exposed to physical contact with any of the materials that follow:

Methyl Alcohol	Xylene
Methyl Ethyl Ketone	Petroleum Naphthas
Methy Isobutyl Ketone	Chromates
Toluene	Dichromates
Trichloroethylene	Acetates
Epoxy resin	Cyclohexanone
Methylene Chloride	Cellosolve
Chemical conversion coatings	Carbon Tetrachloride

Then use the safety procedures that follow:

(a) If a chemical is splashed into the eyes, do not rub them.

(b) Flush the eyes immediately with water for at least 15 minutes. Lift upper and lower eyelids frequently to ensure complete washing.

(c) If a chemical is splashed on clothing or large areas of the body, immediately remove contaminated clothing and wash the body with plenty of soap and water. Also wash the clothing before they are worn again.

(d) If a chemical is splashed onto an easily accessible part of the body, immediately wash with soap and water.

(e) If a person is suffering headache or other obvious symptom resulting from overexposure to chemicals, move the person to fresh air immediately.

(f) If a person inhales chemical vapors and the persons breathing has slowed down or stopped, then remove the person from the area and start artificial respiration immediately. Call for medical aid and continue this procedure until medical aid arrives.

BOEING PROPRIETARY - Copyright © - Unpublished Work - See title page for details.

(2) If one or more persons are exposed to physical contact with any of the materials that follow:

Hydrofluoric acid	Phenol
Nitric acid	Cresols
Phosphoric acid	Tricresyl phosphate

Treat as follows:

WARNING: IT CANNOT BE OVEREMPHASIZED THAT IMMEDIATE TREATMENT IS MOST IMPORTANT WITH SKIN, EYE AND INHALATION EXPOSURE TO THESE MATERIALS.

(a) Eyes: If splashed into the eyes, do not rub them, flush them immediately with water for at least 15 minutes. Lift upper and lower eyelids frequently to ensure complete washing. Call for medical aid immediately.

(b) Exposed Skin: If splashed on skin, wash affected area with large amounts of water for at least 15 minutes. Get medical aid as soon as possible.

(c) Clothing: If splashed on clothing or large area of body, remove contaminated clothing and wash body under a shower for at least 15 minutes. Wash clothing before reuse. Get medical aid as soon as possible.

(d) Inhalation: If vapors are inhaled, remove worker to fresh air and apply artificial respiration if necessary. Call for medical aid immediately.

NOTE: Tricresyl phosphate is not considered an inhalation hazard.

(e) Internally: Use one of the procedures that follow:

1) Worker is unconscious:

a) Do not give any liquid.

b) Begin artificial respiration and have someone call for medical aid immediately.

2) Worker is conscious:

a) Phenols and Cresols: Do not attempt to induce vomiting. Encourage him to wash out his mouth with large amounts of water. Call for medical aid immediately.

b) Phosphoric Acid: Do not induce vomiting. Call for medical aid immediately.

c) Hydrofluoric Acid: Drink water to dilute acid, then cause vomiting by placing finger in the back of throat. Repeat. Wash out mouth repeatedly. Call for medical aid immediately.

BOEING PROPRIETARY - Copyright © - Unpublished Work - See title page for details.

d) Nitric Acid: Do not induce vomiting. Drink copious amounts of water, if possible. Call for medical aid immediately.

e) Tricresyl Phosphate: Cause vomiting by placing finger in the back of the worker's throat. If necessary, have him drink water, then use finger to induce vomiting. Call for medical aid immediately.

15. Identification of Metals

A. Make sure that you refer to the applicable subjects in Chapters 52 through 57 in this manual to identify the metal material. If positive identification cannot be made, then chemical spot testing can be done.

WARNING: PERSONNEL MUST BECOME THOROUGHLY FAMILIAR WITH THE SAFETY PRECAUTIONS AND EMERGENCY SAFETY PROCEDURES, PAR. 14, PRIOR TO PERFORMING ANY CHEMICAL TESTING.

CAUTION: CHEMICAL SPOT TESTING SHOULD BE USED ONLY WHEN ALL OTHER MEANS OF IDENTIFICATION HAVE BEEN EXHAUSTED.

FASTENERS MUST NOT BE IDENTIFIED BY CHEMICAL SPOT TESTS.

B. A serious problem encountered in corrosion control is the identification of the metal on which corrosion occurs. The importance of this identification arises from the fact that all metals possess certain chemical characteristics that are common only to themselves; and which vary greatly from metal to metal, and from alloy to alloy of the same metal.

C. Since these characteristics are common to all metals and their alloys, chemical cleaning solutions and chemical protective films will react differently with various metals; and in some cases, produce adverse reactions which can severely weaken or destroy the structural capabilities of the metal. Aluminum, steel, and magnesium sheet and plate are stenciled on the back for identification.

D. When these markings are not distinguishable or the metal is not identified in the applicable section, or when a plating material needs to be identified, positive identification can be made by chemical spot testing, hardness testing, or a combination of the two methods.

E. Chemical testing

(1) The chemical identification of the various types of metals used in airplane construction should be accomplished. Before any tests are conducted, the preliminary surface preparation and primary classification of the metal should be accomplished by the following procedure:

CAUTION: MASK ANY ADJACENT STRUCTURE MADE OF ADVANCED COMPOSITES. PAINT REMOVER CAN DAMAGE THE RESIN SYSTEM IN FIBERGLASS, ARAMID AND CARBON FIBER STRUCTURE.

(a) On the surface to be tested, choose an area where there is no corrosion and remove paint (if present) from a 1-inch square. Paint may be stripped with a cloth soaked in methyl ethyl ketone or paint remover or any equivalent material.

BOEING PROPRIETARY - Copyright © - Unpublished Work - See title page for details.

(b) Clean area of surface to be tested.

(c) Try to identify the exposed metal surface by visually comparing it with samples of previously identified materials.

(d) Identify the metal as ferrous or nonferrous by placing a magnet on the exposed surface.

1) Magnetic attraction classifies the base metal as a ferrous magnetic material (iron or steel.

2) The absence of magnetic attraction classifies the base metal as either an austenitic steel or a nonferrous metal (aluminum, magnesium, etc.).

(e) If the metal is magnetic, refer to par. F. for chemical spot testing. If the metal is nonmagnetic, refer to par. G. Refer to par. H. for clad aluminum penetration test.

F. Chemical Spot analysis of Magnetic metals

(1) The magnetic metals usually employed in aircraft construction are ferrous alloys (low alloy steel and chromium-nickel-iron alloys sometimes called stainless steels). These magnetic alloys, when plated, are generally plated with either chromium, nickel, zinc, cadmium, silver, or with a combination of these platings. If a magnetic alloy has been plated with cadmium, zinc, or chromium, it will exert magnetic attraction. Nickel plating will show slight magnetic attraction even if the substrate or base metal is not magnetic.

(2) If positive identification of the metal plating is necessary, identification by chemical spot analysis should be made after accomplishing a hardness test as detailed in SRM 51-10-3.

CAUTION: DO NOT PERFORM CHEMICAL SPOT TEST ON STEELS HEAT TREATED TO 220,000 PSI AND ABOVE.

(a) Place a drop of 10% hydrochloric acid (HCl) on the prepared metal surface. Make sure that the surface is dry before applying acid.

1) A rapid reaction producing a dark deposit indicates that the metal is zinc.

WARNING: THE ADDITION OF SODIUM SULFIDE (Na_2S) TO ACID PRODUCES A POISONOUS GAS. ADEQUATE VENTILATION MUST BE PROVIDED WHEN THESE TESTS ARE BEING PERFORMED. DO NOT ALLOW LARGE QUANTITIES OF SODIUM SULFIDE (Na_2S) AND ACID TO BE MIXED.

2) A slow or no reaction indicates that the metal may be cadmium, chromium, nickel, or steel.

(b) After 1 minute, add a drop of sodium sulfide (Na_2S) to the drop of hydrochloric acid (HCl).

BOEING PROPRIETARY - Copyright © - Unpublished Work - See title page for details.

1) A white precipitate identifies the metal as zinc.

2) A yellow ring formed around a white precipitate identifies the metal as cadmium.

3) A black ring formed around a white precipitate identifies the metal as iron or steel.

4) A black precipitate indicates that the metal is chromium or nickel.

(c) Confirm the cadmium, zinc, iron, or steel test by placing a drop of 20% nitric acid (HNO_3) on a fresh spot. After 1 minute, add a drop of sodium sulfide (Na_2S) to the drop of nitric acid (HNO_3).

1) A white precipitate identifies the metal as zinc.

2) A yellow precipitate identifies the metal as cadmium.

3) A black spot identifies the metal as iron or steel.

(d) Confirm the chromium test by placing a drop of 10% hydrochloric acid on a fresh spot. Add a drop of concentrated sulfuric acid (H_2SO_4) to the drop of hydrochloric acid.

1) A color change to green after 1 or 2 minutes identifies the metal as chromium.

(e) Confirm the nickel test by placing a drop of ammonium hydroxide (NH_4OH) to the drop of dimethylgloxime solution.

1) A pink to red precipitate identifies the metal as nickel.

(f) Clean and refinish as given in par. I.

G. Chemical Spot analysis of Nonmagnetic metals

(1) The most common nonmagnetic metals used in aircraft construction are aluminum, magnesium, and austenitic steels (generally used as 18-8 stainless steel. The positive identification of these nonmagnetic metals is accomplished by the following procedure:

(a) Place a drop of 10% hydrochloric acid (HCl) on the prepared metal surface and allow to stand for 1 minute. Ensure that surface is dry before applying acid.

NOTE: Zinc deposits on nonmagnetic metals will react with 10% hydrochloric acid but will not produce a black spot.

1) A rapid or violent reaction that produces a black spot indicates that the metal is magnesium.

2) A slow reaction indicates that the metal is aluminum.

3) No reaction indicates that the metal is an austenitic steel or a nonmagnetic plating material.

BOEING PROPRIETARY - Copyright © - Unpublished Work - See title page for details.

(b) If a reaction that did not produce a black spot is noted in step (a), determine if zinc is present as detailed in par. G.

(c) If the results of step (b) preceding are negative, confirm the magnesium and aluminum tests by placing a drop of 10% sodium hydroxide (NaOH) on a fresh spot. Check for the following:

1) No reaction which will identify the metal as magnesium.

2) A reaction that produces a colorless spot to identify the metal as a clad-aluminum alloy.

3) A reaction that produces a black spot to identify the metal as a bare-aluminum alloy.

(d) If an aluminum alloy is identified in step (a), then do a test to distinguish the different alloys by placing a drop of 10 percent cadmium chloride on a fresh spot.

1) A dark gray deposit forming within a few seconds will identify the metal as Series 7000 bare-aluminum alloy.

2) A dark gray deposit forming within 2 minutes will identify the metal as Series 7000 clad-aluminum alloy.

3) No deposit formation in the time specified for Series 7000 clad will identify the metal as Series 2000 aluminum alloy (a faint deposit will form after 15 to 20 minutes).

(e) Confirm the austenitic steel test by dissolving 10 grams of cupric chloride

1) Place (CuC_{12}, $2H_20$) in 100 milliliters (cubic centimeters) of hydrochloric acid and placing a drop of the solution on a fresh spot.

2) After 2 minutes, add 3 or 4 drops of distilled water to the drop of hydrochloric acid solution and dry the surface.

3) The appearance of a brown spot identifies the metal as an austenitic steel.

(f) If no reaction was noted in step (a) or (e) preceding, test for a plating material as detailed in steps (a) through (c) of par. G.

(g) If step (f) reveals the presence of plating on the nonmagnetic metal, the plating must be removed by mechanical abrasion and the base metal identified by the visual and/or chemical methods.

(h) Clean and refinish as given in par. I.

BOEING PROPRIETARY - Copyright © - Unpublished Work - See title page for details.

H. Clad Penetration Test

(1) Clean the area to be tested by swabbing with a soft wiper moistened with BMS 3-2 solvent.

(2) Wipe the surface dry.

(3) Mask off damage to prevent staining of adjacent areas by test solution. Allow no more than 1/32 inch bare metal around periphery of damage.

WARNING: DO NOT ALLOW TEST SOLUTION TO CONTACT SKIN OR EYES. WEAR PROTECTIVE CLOTHING AND EYE PROTECTION. THE TEST SOLUTION IS CAUSTIC AND WILL CAUSE INJURY TO PERSONNEL.

(4) Mix the test solution. Use the following proportions:

Potassium Nitrate	200 grams
Sodium Hydroxide	100 grams
Water to make one liter of solution	

CAUTION: DO NOT ALLOW TEST SOLUTION TO CONTACT ANY OTHER AREA THAN THAT TO BE TESTED. THE TEST SOLUTION IS CAUSTIC AND WILL DAMAGE STRUCTURE.

(5) Apply one drop of test solution to the deepest point of the damage. Use the sharp point of a toothpick. Use the minimum amount of test solution necessary to penetrate to the bottom of the damage.

(6) If the bottom of the damage reveals a distinct black indication, the damage has penetrated the cladding to the base material.

(7) Do not allow test solution to stand over 3 minutes. Rinse thoroughly with water.

I. Post Identification Cleaning

WARNING: THE REAGENTS USED IN THE CHEMICAL SPOT TEST ARE EXTREMELY CORROSIVE. OBSERVE THE SAFETY PRECAUTIONS OF PAR. 14. IF YOU DO NOT OBEY, THEN INJURY TO PERSONNEL CAN OCCUR.

(1) After identification of the metal is completed, clean the area as follows:

(a) Blot any remaining chemicals with a dry cloth.

(b) Swab the area several times with a water-moistened cloth.

(c) Test the surface by placing a piece of litmus paper on the moistened surface.

BOEING PROPRIETARY - Copyright © - Unpublished Work - See title page for details.

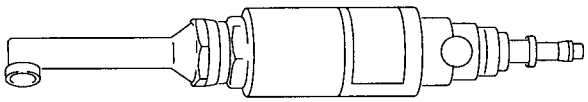

90° AIR MOTOR, 1800 TO 6000 RPM RANGE
MANUFACTURED BY COOPER POWER TOOLS
P.O. BOX 1410
670 INDUSTRIAL DRIVE
LEXINGTON, SOUTH CAROLINA 29071
TELEPHONE NUMBER 1-800-845-5629

AS AN ALTERNATIVE, YOU CAN USE A
90° AIR MOTOR MANUFACTURED BY
DESOUTTER INCORPORATED
24415 HALSTEAD ROAD
FARMINGTON HILLS, MISSOURI 48335
TELEPHONE NUMBER 1-248-476-5358
OR AN EQUIVALENT SUPPLIER

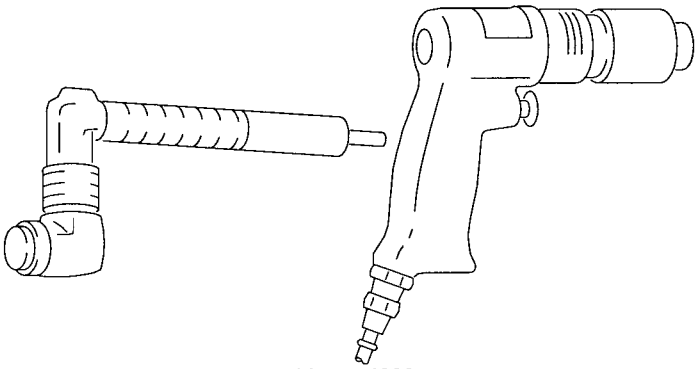

90° AIR MOTOR, 1800 TO 6000 RPM RANGE
MANUFACTURED BY COOPER POWER TOOLS
P.O. BOX 1410
670 INDUSTRIAL DRIVE
LEXINGTON, SOUTH CAROLINA 29071

AS AN ALTERNATIVE, YOU CAN USE A 90° AIR MOTOR
MANUFACTURED BY DESOUTTER INCORPORATED
24415 HALSTEAD ROAD
FARMINGTON HILLS, MISSOURI 48335
TELEPHONE NUMBER 1-248-476-5358
OR AN EQUIVALENT SUPPLIER

ALSO SHOWN IS A 360° ADAPTER MANUFACTURED BY AN
INDUSTRIAL SUPPLIER OR AN EQUIVALENT SUPPLIER.

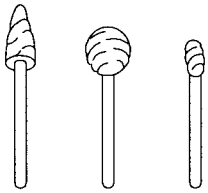

ROTARY FILES. BALL AND CONICAL SHAPES.
MANUFACTURED BY AN INDUSTRIAL SUPPLIER
OR AN EQUIVALENT TYPE OF SUPPLIER.

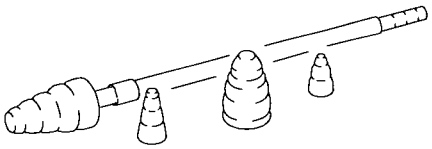

SPIRAPOINT CONES WITH 1/2 INCH DIAMETER ADAPTER
CONE. SIZES 3/4 BY 1-1/2 INCHES, 1/2 BY 3/4
INCH AND 5/8 BY 1-1/2 INCHES. MANUFACTURED BY
AN INDUSTRIAL SUPPLIER OR AN EQUIVALENT TYPE
OF SUPPLIER.

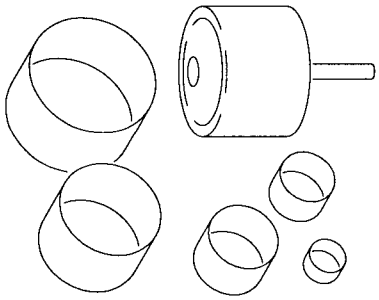

DRUM SANDER. 1/4 INCH DIAMETER DRIVE DRUM.
3/4 INCH AND 1 BY 1 INCH SLEEVE. ALUMINUM OXIDE
ABRASIVE. MANUFACTURED BY AN INDUSTRIAL SUPPLIER
OR AN EQUIVALENT TYPE OF SUPPLIER.

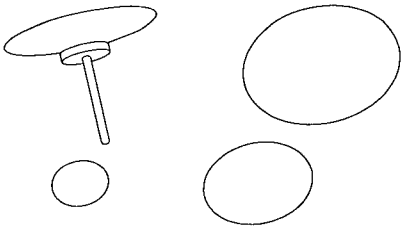

MUSHROOM SANDING PAD WITH 1,2, AND 3 INCH
DIAMETER ALUMINUM OXIDE ABRASIVE DISCS. 1/4
INCH DIAMETER SHANK FOR AIR MOTOR. 1/4-28
SIZE THREADED SHANK FOR 90° AIR MOTOR
MANUFACTURED BY AN INDUSTRIAL SUPPLIER OR
AN EQUIVALENT TYPE OF SUPPLIER.

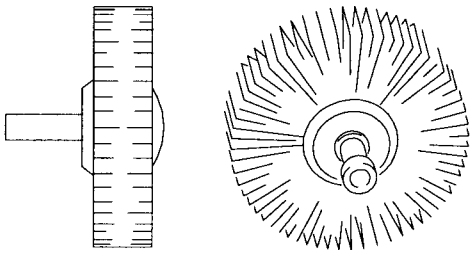

FLEXIBLE SANDING WHEEL. "GRIND-O-FLEX," 1/2 BY
2 INCHES AND 1 BY 3 INCHES. 80 GRIT, ALUMINUM
OXIDE ABRASIVE. MANUFACTURED BY AN INDUSTRIAL
SUPPLIER OR AN EQUIVALENT TYPE OF SUPPLIER.

Corrosion Removal Tools
Figure 1

BOEING PROPRIETARY - Copyright © - Unpublished Work - See title page for details.

WARNING: WEAR A FACE SHIELD OR PROTECTIVE EYE GOGGLES WHEN YOU USE THIS ROUTER. DISCONNECT THE AIR SUPPLY WHEN YOU MOUNT OR ADJUST THE ROUTER HEIGHT. IF YOU DO NOT OBEY, INJURY TO PERSONNEL CAN OCCUR.

NOTES

- ALL DIMENSIONS ARE IN INCHES.
- AN EXPLOSION-PROOF AIR-POWERED ROUTER ASSEMBLY IS RECOMMENDED FOR THE REMOVAL OF THE SKIN AND DAMAGED CORE IN A FLAT PANEL.
- YOU CAN USE THE ROUTER ASSEMBLY SETUP, SHOWN IN DETAIL I, TO CUT HOLES IN FLAT METAL PANELS OR NON-METAL COMPOSITE PANELS, INCLUDING THOSE WITH A HONEYCOMB CORE.
- HOLD THE ROUTER ASSEMBLY PERPENDICULAR TO THE REPAIR SURFACE AS SHOWN IN DETAIL I.
  - THE ROUTER SUPPORT AND THE LOCK RING ARE DESIGNED TO KEEP THE ROUTER PERPENDICULAR TO THE REPAIR SURFACE.
  - USE THE ROUTER SUPPORT TO ADJUST THE DEPTH OF THE CUT.
- USE THE ROUTER TEMPLATE ASSEMBLY, AS SHOWN IN DETAIL IV, TO TRIM THE DAMAGE FROM THE REPAIR AREA. THIS TEMPLATE IS DESIGNED FOR USE WITH A 0.25-INCH (6mm) ROUTER BIT.
  - THE ROUTER TEMPLATE AND RING ARE DESIGNED TO PERMIT YOU TO CUT CIRCULAR HOLES OF DIFFERENT SIZES.
  - AS AN ALTERNATIVE, YOU CAN USE A PLYWOOD TEMPLATE THAT IS DESIGNED TO PERMIT CUTS TO BE MADE IN OTHER SHAPES AND SIZES.

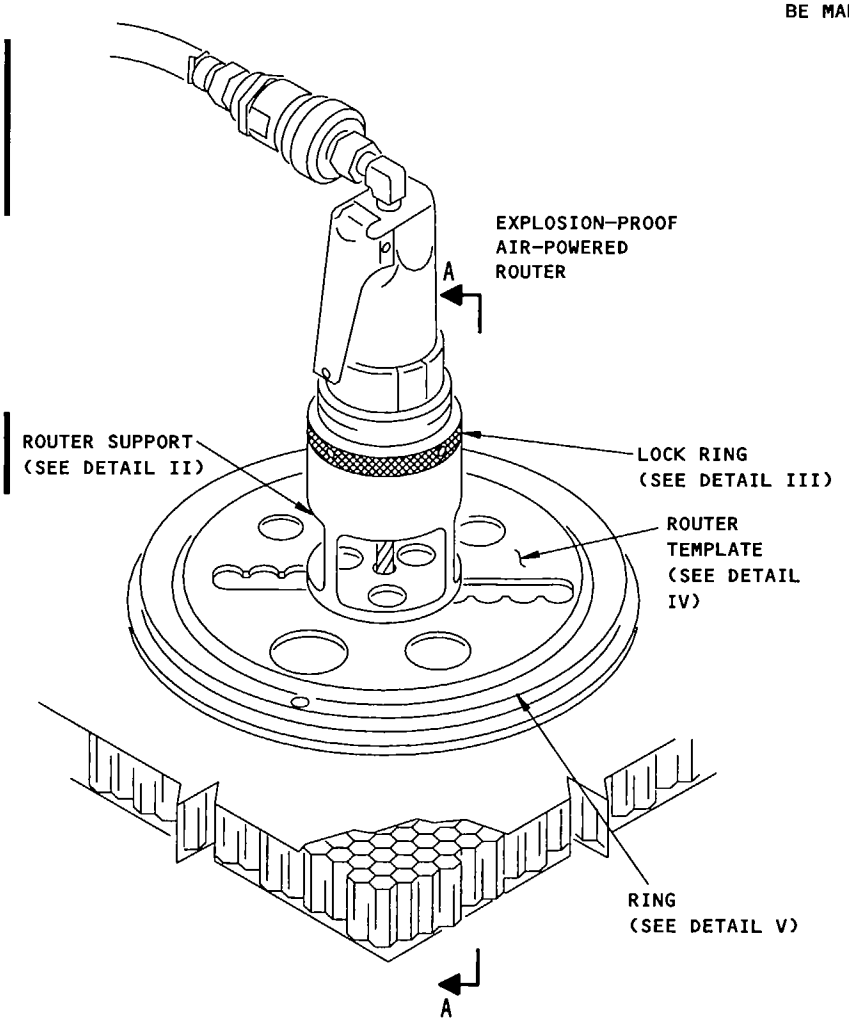

DETAIL I
TYPICAL ROUTER ASSEMBLY

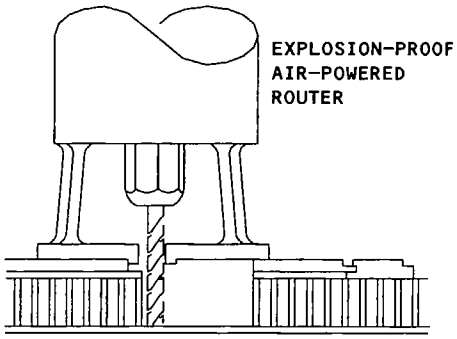

A-A

Router and Template
Figure 2 (Sheet 1)

BOEING PROPRIETARY - Copyright © - Unpublished Work - See title page for details.

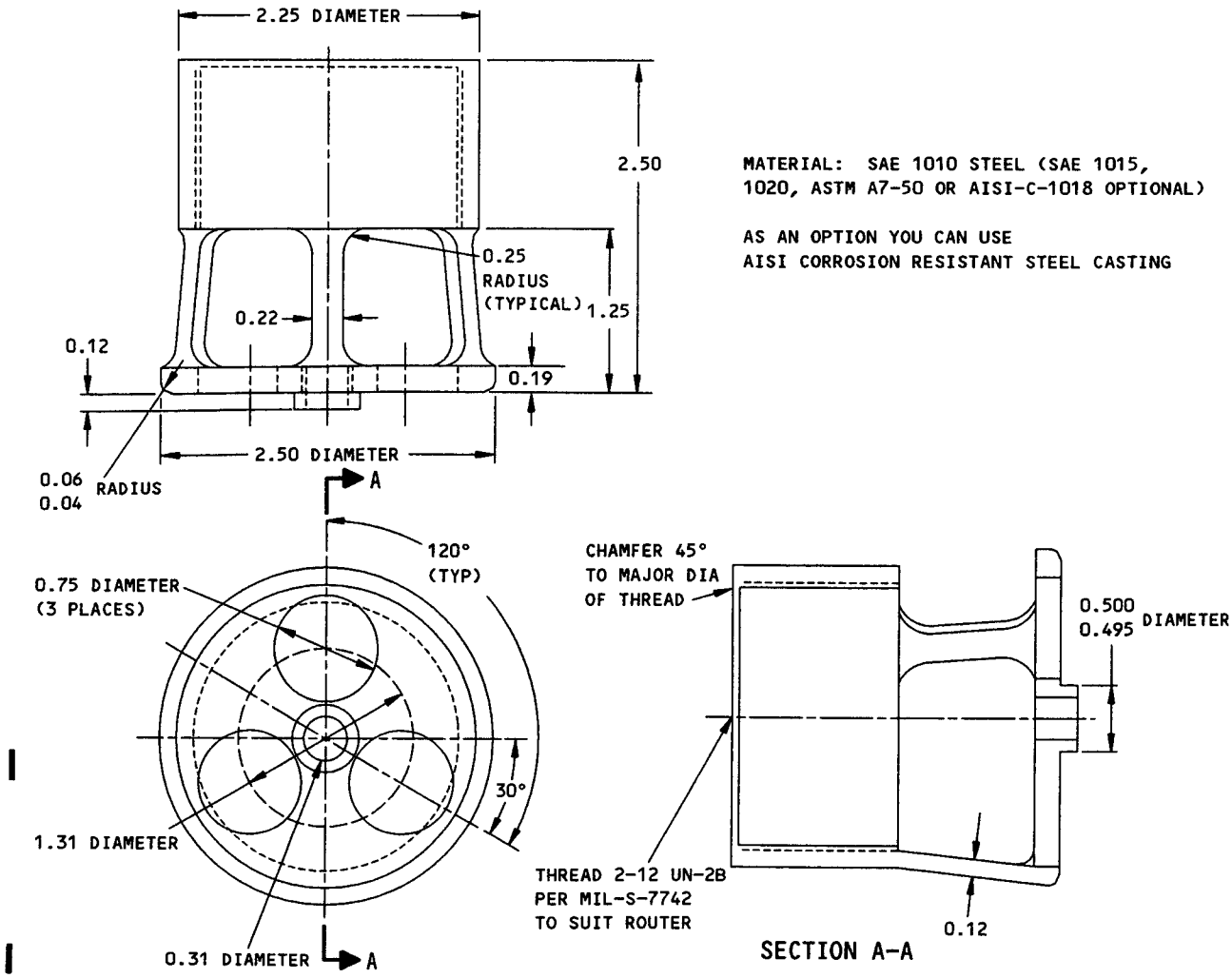

MATERIAL: SAE 1010 STEEL (SAE 1015, 1020, ASTM A7-50 OR AISI-C-1018 OPTIONAL)

AS AN OPTION YOU CAN USE AISI CORROSION RESISTANT STEEL CASTING

SUPPORT BASE ASSEMBLY
DETAIL II

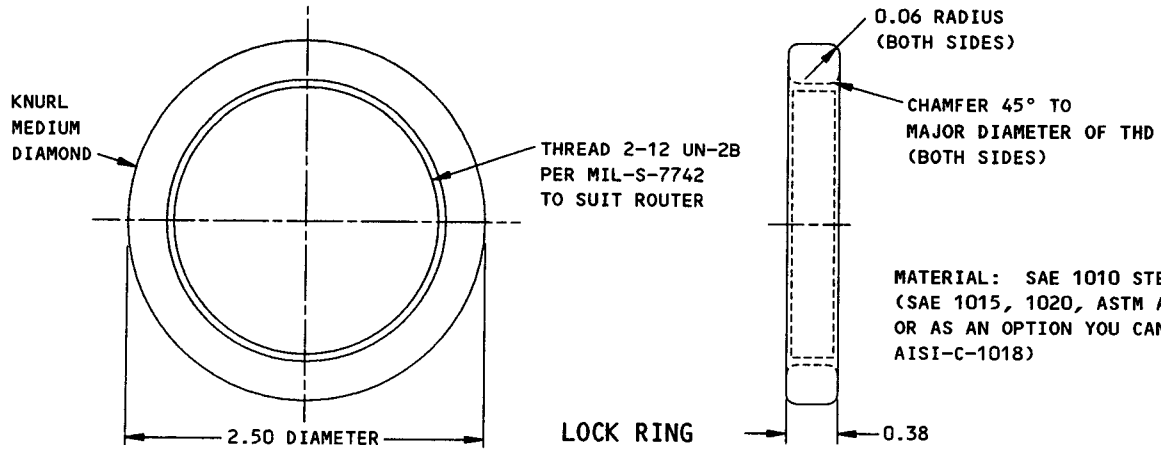

MATERIAL: SAE 1010 STEEL (SAE 1015, 1020, ASTM A7-50 OR AS AN OPTION YOU CAN USE AISI-C-1018)

LOCK RING
DETAIL III

Router and Template
Figure 2 (Sheet 2)

BOEING PROPRIETARY - Copyright © - Unpublished Work - See title page for details.

INSTRUCTIONS TO USE THE ROUTER TEMPLATE

NOTE: The router template is designed to guide the air-powered router assembly while it cuts out damage in a circular outline with 0.25 inch router bit. See Detail IV.

1. To cut out larger diameters from the repair area, put the template ring over the center of the damage.
2. Put masking tape down over the template to hold it in position for cutting.

   NOTE: The template turns freely inside the ring. The heads of the two screws prevent the template from moving out of its seated position.

3. Start routing the area from the center of the damage. Put the router into the semicircular slot labeled "Slot 1" shown in Detail IV.
4. Start the air-powered router and turn the template in a clockwise direction to remove the damage.

   NOTE: You can put a handle into the tapped hole to help turn the template in the correct direction.

5. After you complete the circle with the router in slot 1, then put the router into next numbered slot, shown in Detail IV as "Slot 2, Slot 3, Slot 4, Slot 5 and so on, until the damage is removed.

   NOTE: Use the router sequence given in Detail IV for each next larger slot diameter to cut out the damage.

MATERIAL: SAE 1010 STEEL (AS AN OPTION YOU CAN USE SAE 1015, 1020, ASTM A7-50 OR AISI-C-1018

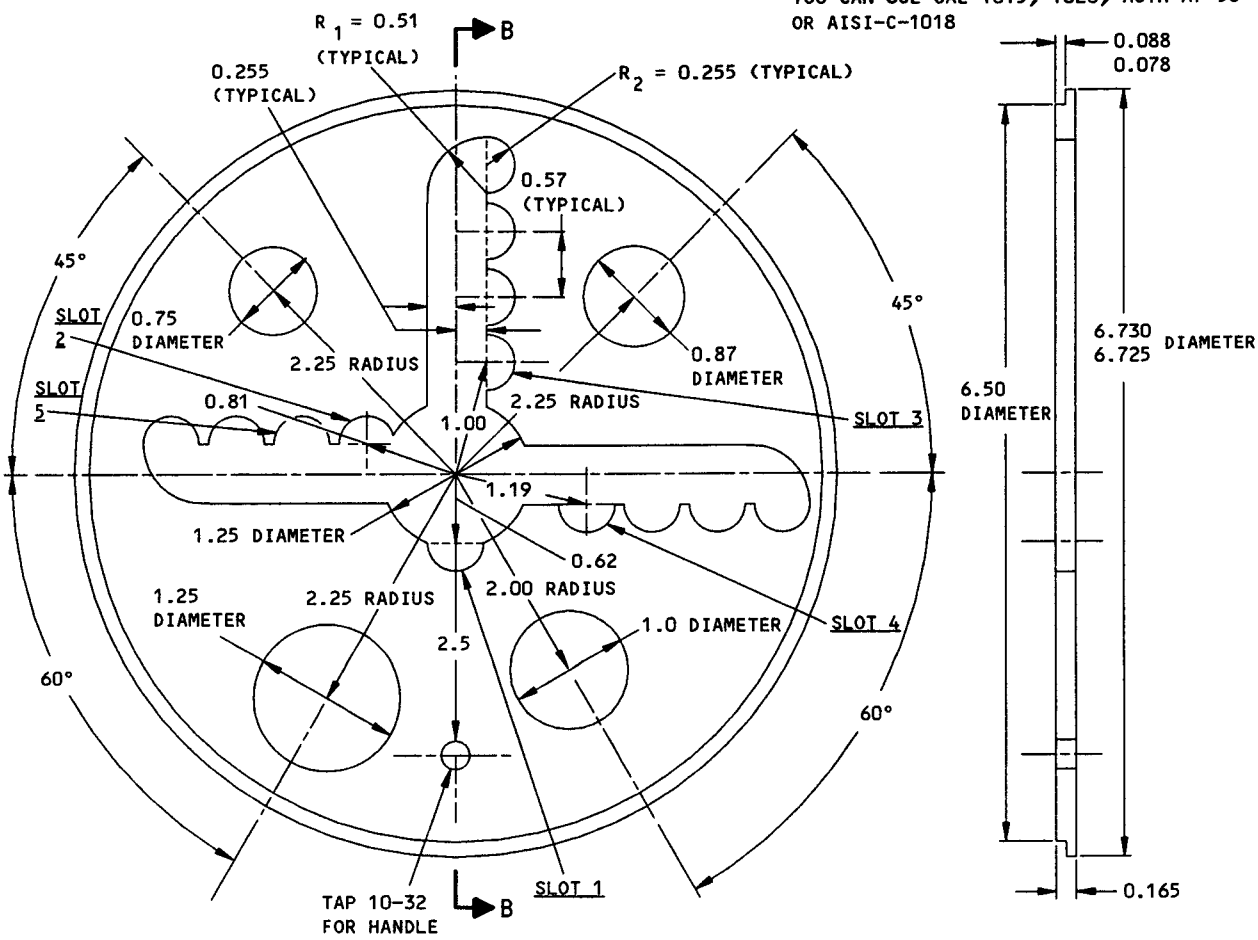

ROUTER TEMPLATE
DETAIL IV

SECTION B-B

Router and Template
Figure 2 (Sheet 3)

BOEING PROPRIETARY - Copyright © - Unpublished Work - See title page for details.

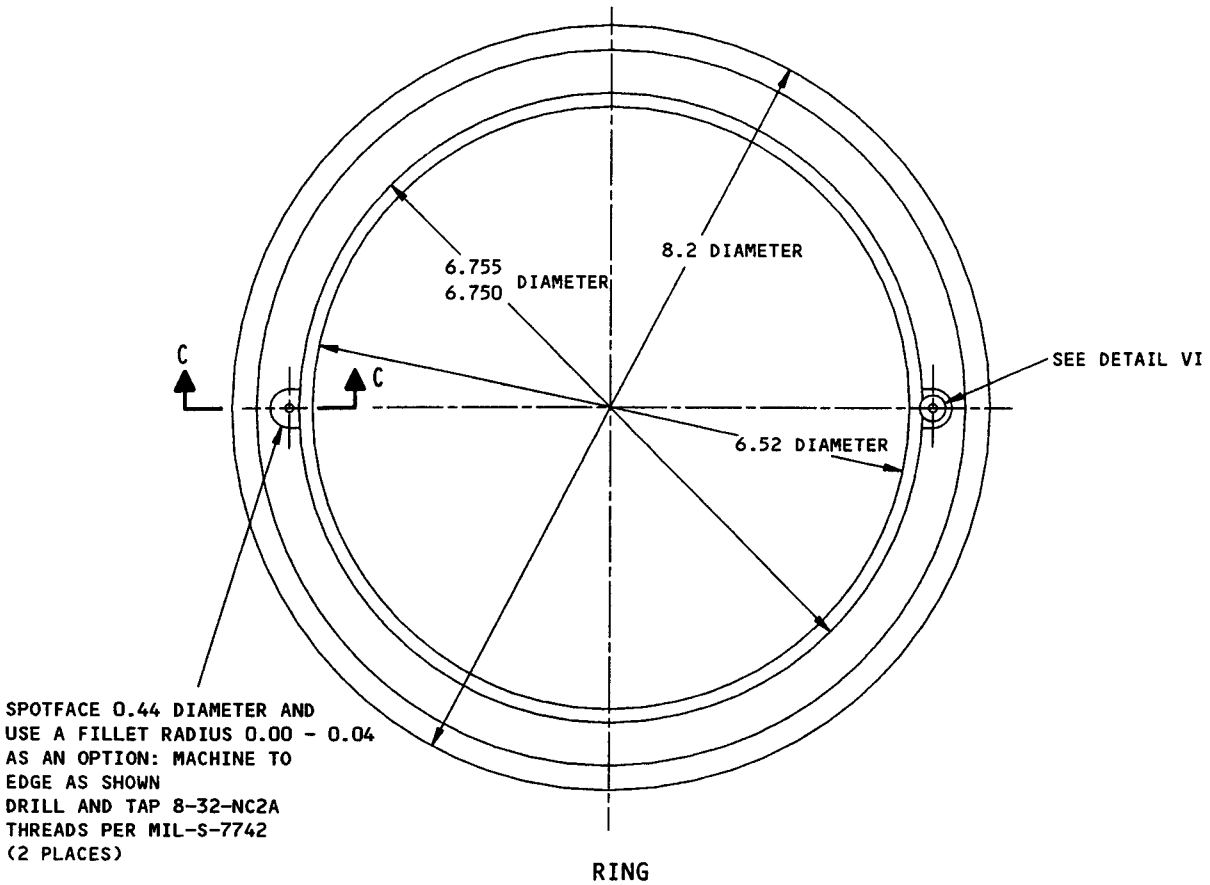

RING
DETAIL V

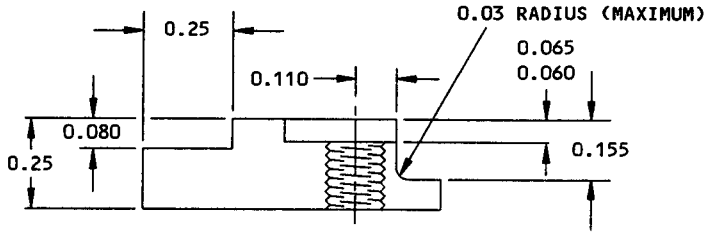

MATERIAL: SAE 1010 STEEL (AS AN OPTION, YOU CAN USE SAE 1015, 1020, ASTM A7-50 OR AISI-C-1018)

SECTION C-C

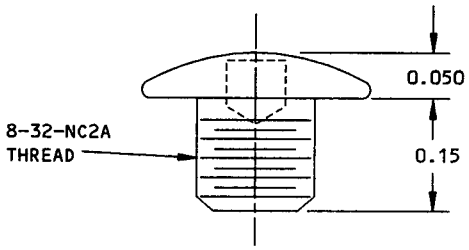

DETAIL VI

Router and Template
Figure 2 (Sheet 4)

BOEING PROPRIETARY - Copyright © - Unpublished Work - See title page for details.

INSTRUCTIONS TO USE THE HOLE SAW

1. The hole saw and guide is used to cut holes in damaged aluminum skin or aluminum panels. You can cut 1.0, 2.0 and 3.0 inch diameter holes.

   NOTE: As an alternative, you can use the power router shown in Figure 2.

2. Make the guide bushing from 0.75 inch thick aluminum plate. Cut out the center hole in the bushing to a size that will permit you to turn the hole saw freely.
3. Put the guide bushing on the surface of the repair area. Use double-backed tape to hold the guide in position.
4. Put the hole saw in the guide bushing hold the saw perpendicular to the surface while you cut.

   NOTE: Use a light pressure as you slowly turn the saw to cut the surface.

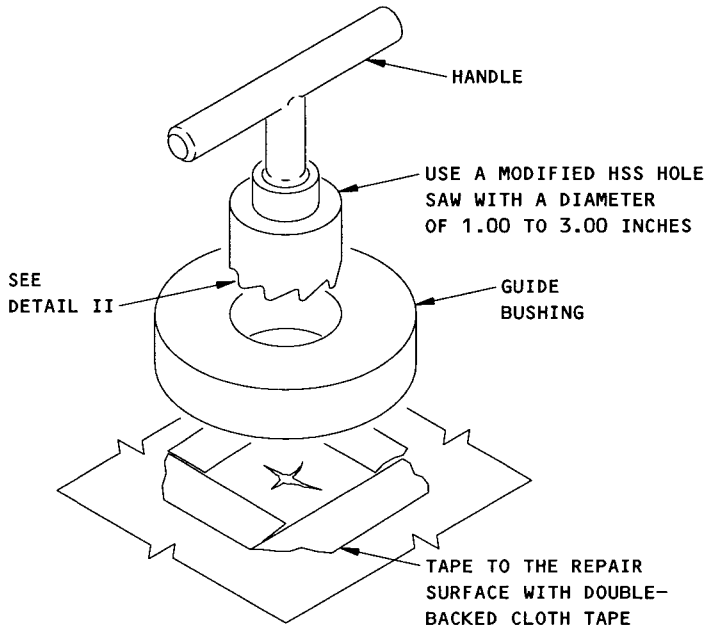

DETAIL I

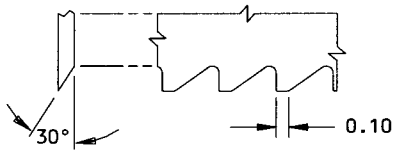

DETAIL II

The Use of the Hole Saw
Figure 3

INSTRUCTIONS TO USE THE SQUEEGEE

1. Make squeegee from 0.07 inch thick plexiglass or an equivalent material.
2. Use the edge with notches to impregnate fiberglass cloth with adhesive resin, or you can remove trapped air bubbles from a wet layup.

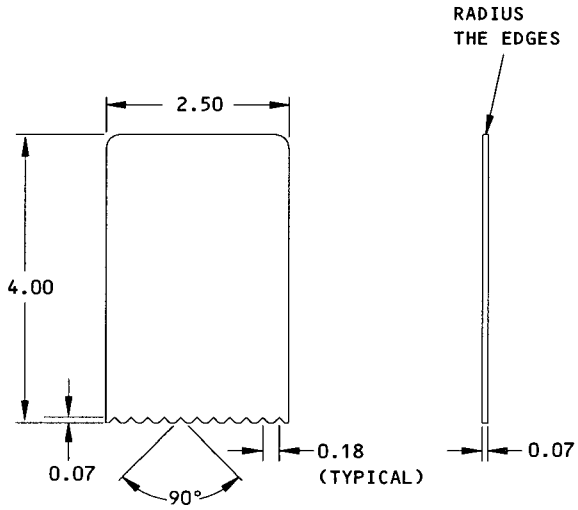

The Use of the Squeegee
Figure 4

BOEING PROPRIETARY - Copyright © - Unpublished Work - See title page for details.

METALS OR MATERIALS TO BE PROCESSED	RESTRICTIONS	OPERATION	ABRASIVE PAPER OR CLOTH			ABRASIVE FABRIC OR PAD	WOOL		PUMICE 350 MESH OR FINER	SCOTCH-BRITE TYCRO WHEELS
			ALUMINUM OXIDE	SILICON CARBIDE	GARNET		ALUMI-NUM	STAIN-LESS STEEL		
FERROUS ALLOYS HEAT TREATED TO 220,000 PSI AND ABOVE	DO NOT USE ACID BASE RUST REMOVERS. DO NOT USE HAND-HELD POWER TOOLS GRINDING IS NOT PERMITTED	CORROSION REMOVAL OR FAIRING	150 OR FINER	150 OR FINER		FINE TO ULTRAFINE	X	X	X	
		FINISHING	400				X	X	X	
FERROUS NICKEL AND COBALT ALLOYS	DOES NOT APPLY TO STEEL HEAT TREATED TO 220,000 PSI AND ABOVE	CORROSION REMOVAL OR FAIRING	150 OR FINER	180 OR FINER		FINE TO ULTRAFINE	X	X	X	5A OR 7S MEDIUM
		FINISHING	400				X	X	X	7S FINE
ALUMINUM ALLOYS EXCEPT CLAD ALUMINUM	DO NOT USE SILICON CARBIDE ABRASIVE.	CORROSION REMOVAL OR FAIRING	60 OR FINER		7/0 OR FINER	VERY FINE AND ULTRAFINE	X		X	5A MEDIUM
		FINISHING	400				X		X	
CLAD ALUMINUM	SANDING LIMITED TO THE REMOVAL OF MINOR SCRATCHES.	CORROSION REMOVAL OR FAIRING	240 OR FINER		7/0 OR FINER	VERY FINE AND ULTRAFINE			X	
		FINISHING	400						X	
MAGNESIUM ALLOYS	DO NOT USE CARBON STEEL BRUSHES OR SILICON CARBIDE ABRASIVES.	CORROSION REMOVAL OR FAIRING	240 OR FINER			VERY FINE AND ULTRAFINE	X		X	
		FINISHING	400				X		X	
TITANIUM		CORROSION REMOVAL OR FAIRING	80 OR FINER	80 OR FINER				X	X	5A OR 7S MEDIUM
		CLEANING AND FINISHING	150 OR FINER	180 OR FINER				X	X	7S FINE

Abrasives for Sanding or Scouring
Figure 5

BOEING PROPRIETARY - Copyright © - Unpublished Work - See title page for details.

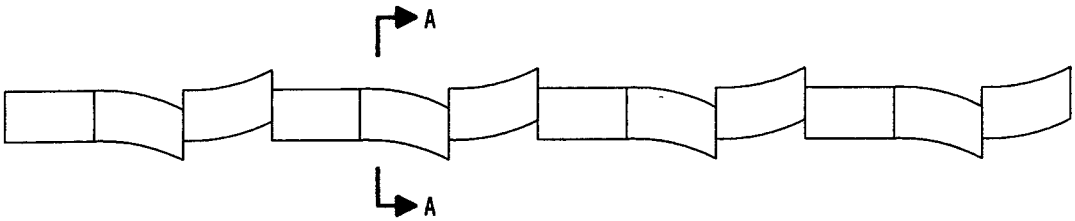

RAKER TOOTH FORM OF BAND SAW BLADE

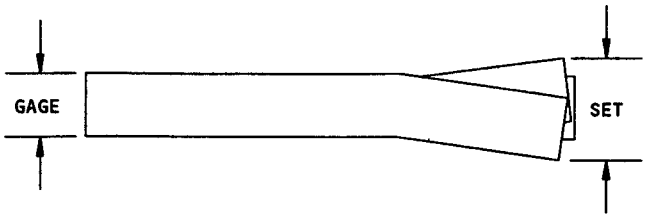

SECTION A-A

WORKPIECE MATERIAL	WORKPIECE THICKNESS	BAND TYPE	TOOTH FORM	PITCH	BAND SPEED (FOOT/ MINIMUM)	CUTTING RATE (SQUARE INCH/ MINIMUM)	CUTTING FLUID
ALUMINUM METAL HONEYCOMB CORE (CUT PARALLEL TO CELL WALLS)	LESS THAN 6.0 INCHES (15.24 cm)	WELD EDGE	RAKER	14	4000	100	NONE
NON-METAL NOMEX HONEYCOMB CORE (CUT PARALLEL TO CELL WALLS)	LESS THAN 12.0 INCHES (30.5 mm)	CONTINUOUS DIAMOND EDGE	60 TO 80 GRIT		6000	100	NONE (VACUUM REMOVAL OF DUST)
		CONTINUOUS REMINGTON TUNGSTEN CARBIDE	70 TO 100 GRIT		6000	100	

RECOMMENDED CONDITIONS FOR BAND SAWING HONEYCOMB CORE MATERIALS

Band Sawing of Metallic and Non-Metallic Honeycomb Core Materials
Figure 6

BOEING PROPRIETARY - Copyright © - Unpublished Work - See title page for details.

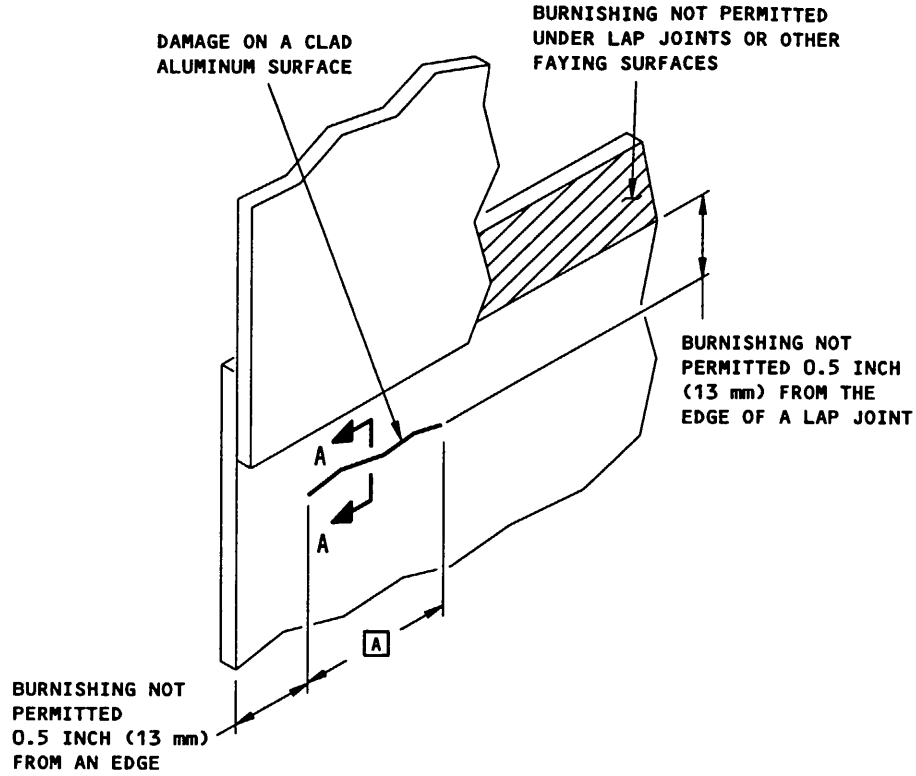

DETAIL I

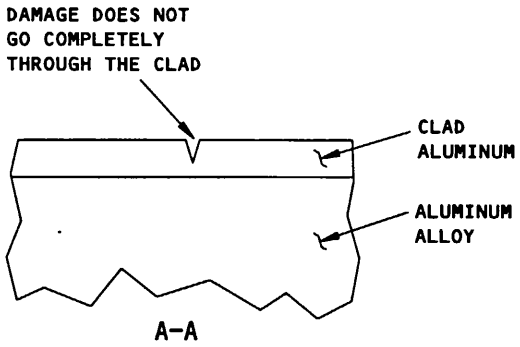

A-A

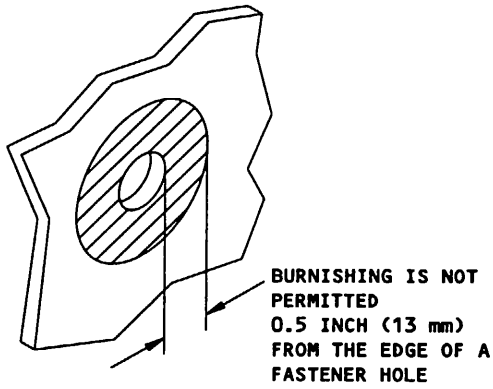

DETAIL II

NOTES

A DAMAGE MUST BE LESS THAN OR EQUAL TO THE MAXIMUM LENGTH GIVEN IN THE ALLOWABLE DAMAGE LIMITS OF THE APPLICABLE CHAPTER-SECTION-SUBJECT GIVEN IN THIS MANUAL, OR 2.0 INCHES (50 mm) IF NO LIMIT IS GIVEN IN THE ALLOWABLE DAMAGE LIMITS SECTION.

Burnishing Restrictions on Primary Structure
Figure 7

BOEING PROPRIETARY - Copyright © - Unpublished Work - See title page for details.

PROTECTIVE TREATMENT OF METALLIC AND NON-METALLIC MATERIALS

1. Applicability

Use this chapter-section-subject for the protection of metal and composite structure and materials.

2. General Information about Protective Treatments

A. When you do a repair or rework procedure that breaks the surface of an initial structure, you must apply a protective treatment to the surface. The treatment makes a base for the paint and inhibits corrosion when you apply it before the installation of the repair parts.

B. Bare aluminum and magnesium alloys in initial structure need a chemical conversion coating for corrosion protection.

C. Bare aluminum alloy and the chamfered edges of clad aluminum alloy repair parts need a protective treatment before you apply a primer.

D. All steel parts need cadmium or zinc-nickel plating.

E. If you use BMS 10-20 primer, then prepare the surface with the Alodine 600 chemical conversion coating. Do not use Alodine 1000 or Alodine 1200S in areas where you use BMS 10-20 primer material.

F. If corrosion occurs on a structural component surface, the surface must be re-finished. This is true even when the damage is not more than the applicable allowable damage limits. Apply the decorative finish if applicable, as given in the Airplane Maintenance Manual (AMM). Refer to SRM 51-10-6 for corrosion and control procedures.

G. Refer to SRM 51-10-1 par. 5.B. and 5.D. for the mechanical cleanup procedures used to remove burrs or sharp edges.

BOEING PROPRIETARY - Copyright © - Unpublished Work - See title page for details.

H. The maximum allowable temperatures of the following coatings, sealants, adhesives, primers, and paints are as follows:

COATINGS, SEALANTS, ADHESIVES, PRIMERS AND PAINTS	MAXIMUM TEMPERATURE ALLOWABLE °F (°C)
BMS 10-11, Type I Primer and Type II Enamel	300 (149)
BMS 10-60, Type I & II Paint	300 (149)
BMS 10-20, Type II Primer	300 (149)
BMS 3-27 Coating	160 (71)
BMS 10-79, Type II & III Primer	300 (149)
BMS 10-21, Type III Antistatic Coating	300 (149)
BMS 10-86 (BAC 5710 Type 27) Teflon Coating	300 (149)
BMS 5-89 Primer	300 (149)
BMS 10-100, BAC 5797 Coating	200 (93)
BAC 5710, Type 47 PTFE Coating	700 (371) Peak 425 (218) Continuous
BMS 5-92 Adhesive	160 (71)
BMS 10-103 Primer	300 (149)
BMS 5-28 Potting Compound Type 3, 4, 9, 10, 15, 16, 17, 18, 19, 20, 24, 28 Type 11 Type 6, 7, 12, 13, 14, 21, 25, 27	---------- 160 (71) 250 (121) 350 (177)
BMS 5-95 Sealant	200 (93)
BMS 5-126, Type II, III Potting Compound	160 (71)
BMS 5-26 Sealant	200 (93)
BMS 5-63 Sealant	450 (232)
BMS 93-006	450 (232)
BAC 5755 Aluminized Primer	450 (232)
BMS 14-4, Type IV Coating	550 (288)
Chemical Conversion Coating on Aluminum (Unpainted)	140 (60)
Chemical Conversion Coating on Aluminum (Painted)	300 (149)
Chemical Conversion Coating on Steel	200 (93)
Anodized or Hardcoat on Aluminum (unpainted)	300 (149)
Anodized or Hardcoat on Aluminum (Painted)	400 (204)

TABLE I

BOEING PROPRIETARY - Copyright © - Unpublished Work - See title page for details.

3. Aluminum Alloy-Brush Chemical Conversion Coating Process

WARNING: USE EXTREME CAUTION WHEN YOU WORK WITH CORROSIVE CHEMICALS, CHEMICAL CONVERSION COATING POWDERS OR SOLUTIONS. WHEN YOU WORK WITH POWDERS OR APPLY THE SOLUTION TO A SURFACE, YOU MUST USE A RESPIRATOR, AND WEAR GOGGLES, RUBBER OR NEOPRENE GLOVES, BOOTS AND APRONS THAT ARE MADE ACID-RESISTANT MATERIALS. IF YOU DO NOT OBEY, THE CORROSIVE CHEMICALS CAN CAUSE INJURY TO PERSONNEL.

DO NOT PERMIT THE SOLUTION OR POWDER TO TOUCH YOUR SKIN. IF YOU DO, WASH IT OFF IMMEDIATELY WITH WATER. IF THESE CHEMICALS TOUCH YOUR EYES, THEN WASH THEM WITH WATER FOLLOWED BY AN EYE WASH OR USE BORIC ACID. GET MEDICAL AID IMMEDIATELY.

DO NOT PERMIT SWABS OR THE PAPER THAT YOU USE TO APPLY OR REMOVE CHEMICAL CONVERSION COATING SOLUTIONS TO DRY OUT. IMMEDIATELY AFTER YOU USE THEM, SOAK THEM IN WATER BEFORE YOU DISCARD THEM. IF YOU DO NOT OBEY, AFTER THEY DRY THEY CAN BECOME A FIRE HAZARD.

A. The products that follow are approved for use to make a chemical film on aluminum alloys:

(1) Alodine is a registered trade name for a proprietary procedure owned by Parker-Amchem, Henkel Corp.

(2) Iridite is a registered trade name for a proprietary procedure owned by Allied-Kelite Products, a division of the Richardson Co.

(3) Turcoat Alumigold is a registered trade name for a proprietary procedure owned by Turco Products Division, Atochem, Inc.

NOTE: These film layers are softer than the anodic treatment. However, they give a satisfactory protective layer and paint base. Treat repair parts and initial structure that have been cut or filled with one of these chemical conversion coatings.

B. Materials and equipment needed:

(1) One of the following;

(a) Alodine 1200S powder, or

(b) Iridite 14-2 powder or

(c) Turcoat Alumigold B powder, or

(d) Alodine 600 powder.

BOEING PROPRIETARY - Copyright © - Unpublished Work - See title page for details.

(2) Tycro wheels - Type 3A, very fine aluminum oxide wheels, Scotch-Brite pad, Type A, very fine aluminum oxide pads or 400 grit aluminum oxide paper.

(3) Cheesecloth or new rags that contain less than 0.75 percent oil (Flintex-Buffalo Sanitary Wipes Co., or equivalent).

(4) Solvent-General Cleaning of Metal (Series 80) (Refer to SOPM 20-30-80).

C. Preparation of the Alodine Brush Solution

WARNING: DO NOT BREATHE THE VAPORS WHEN YOU WORK WITH NITRIC ACID. ALWAYS USE RESPIRATORY PROTECTION. DO NOT LET THE ACID TOUCH YOUR SKIN, EYES OR CLOTHING. ALWAYS WEAR A FACE SHIELD, AND USE GLOVES, BOOTS AND PROTECTIVE CLOTHING THAT ARE MADE OF ACID-PROOF MATERIALS, IF YOU DO NOT OBEY, THEN AN INJURY TO PERSONNEL CAN OCCUR.

KEEP NITRIC ACID AWAY FROM SOURCES OF HEAT, FIRE OR SPARKS. DO NOT PERMIT NITRIC ACID TO COME IN CONTACT WITH OTHER MATERIALS.

DO NOT BREATHE NITRIC ACID. IF THE ACID FUMES ARE INHALED OR ONLY THOUGHT TO BE INHALED, GET MEDICAL AID IMMEDIATELY.

DO NOT PERMIT NITRIC ACID TO TOUCH YOUR SKIN. IF THE ACID DOES TOUCH YOUR SKIN, THEN WASH THE AREA WITH LARGE AMOUNTS OF WATER AND GET MEDICAL AID IMMEDIATELY.

DO NOT PERMIT NITRIC ACID TO TOUCH YOUR EYES. IF THE ACID DOES TOUCH YOUR EYES, THEN DO NOT RUB THEM. FLUSH YOUR EYES WITH WATER FOR 15 MINUTES AND GET MEDICAL AID IMMEDIATELY.

(1) Prepare the brush chemical conversion coating solution for Alodine. Refer to SOPM 20-43-03 for approved Alodine materials.

NOTE: Prepare the solution in small quantities. A solution that is not used in 24 hours is not usable and should be thrown away. A dirty solution is unsatisfactory.

(2) Mix 3 ounces of Alodine powder and 1 gallon of deionized or distilled water in a polyethylene, stainless steel or equivalent container.

(3) Mix until powder is dissolved.

(4) Let solution stand at least 1 hour before you use it.

NOTE: If you mix with non-distilled water, add nitric acid to control the pH. Use pHydrion papers to find the pH level.

- For Alodine products, the pH must be 1.50 to 2.00

BOEING PROPRIETARY - Copyright © - Unpublished Work - See title page for details.

D. Iridite 14-2 Solution Preparation

WARNING: DO NOT BREATHE THE VAPORS WHEN YOU WORK WITH NITRIC ACID. ALWAYS USE RESPIRATORY PROTECTION. DO NOT LET THE ACID TOUCH YOUR SKIN, EYES OR CLOTHING. ALWAYS WEAR A FACE SHIELD, AND USE GLOVES, BOOTS AND PROTECTIVE CLOTHING THAT ARE MADE OF ACID-PROOF MATERIALS, IF YOU DO NOT OBEY, THEN AN INJURY TO PERSONNEL CAN OCCUR.

KEEP NITRIC ACID AWAY FROM SOURCES OF HEAT, FIRE OR SPARKS. DO NOT PERMIT NITRIC ACID TO COME IN CONTACT WITH OTHER MATERIALS.

DO NOT BREATHE NITRIC ACID. IF THE ACID FUMES ARE INHALED OR ONLY THOUGHT TO BE INHALED, GET MEDICAL AID IMMEDIATELY.

DO NOT PERMIT NITRIC ACID TO TOUCH YOUR SKIN. IF THE ACID DOES TOUCH YOUR SKIN, THEN WASH THE AREA WITH LARGE AMOUNTS OF WATER AND GET MEDICAL AID IMMEDIATELY.

DO NOT PERMIT NITRIC ACID TO TOUCH YOUR EYES. IF THE ACID DOES TOUCH YOUR EYES, THEN DO NOT RUB THEM. FLUSH YOUR EYES WITH WATER FOR 15 MINUTES AND GET MEDICAL AID IMMEDIATELY.

(1) Prepare the brush chemical conversion coating solution.

NOTE: Prepare the solution in small quantities. A solution that is not used in 24 hours is not usable and should be thrown away. A dirty solution is unsatisfactory.

(2) Mix 3 ounces of Iridite 14-2 powder and 1 gallon of deionized or distilled water in a polyethylene, stainless steel or equivalent container.

(3) Mix until the powder is dissolved.

(4) Let the solution stand at least 1 hour before it is used.

NOTE: If you mix with non-distilled water, add nitric acid to control the pH. Use pHydrion papers to find the pH level.

- For the Iridite 14-2, the pH must be 1.10 to 1.60

BOEING PROPRIETARY - Copyright © - Unpublished Work - See title page for details.

E. Turcoat Alumigold Solution Preparation

WARNING: DO NOT BREATHE THE VAPORS WHEN YOU WORK WITH NITRIC ACID ALWAYS USE RESPIRATORY PROTECTION DO NOT LET THE ACID TOUCH YOUR SKIN, EYES OR CLOTHING. ALWAYS WEAR A FACE SHIELD, AND USE GLOVES, BOOTS AND PROTECTIVE CLOTHING THAT ARE MADE OF ACID-PROOF MATERIALS, IF YOU DO NOT OBEY, THEN AN INJURY TO PERSONNEL CAN OCCUR.

KEEP NITRIC ACID AWAY FROM SOURCES OF HEAT, FIRE OR SPARKS DO NOT PERMIT NITRIC ACID TO COME IN CONTACT WITH OTHER MATERIALS.

DO NOT BREATHE NITRIC ACID. IF THE ACID FUMES ARE INHALED OR ONLY THOUGHT TO BE INHALED, GET MEDICAL AID IMMEDIATELY.

DO NOT PERMIT NITRIC ACID TO TOUCH YOUR SKIN. IF THE ACID DOES TOUCH YOUR SKIN, THEN WASH THE AREA WITH LARGE AMOUNTS OF WATER AND GET MEDICAL AID IMMEDIATELY.

DO NOT PERMIT NITRIC ACID TO TOUCH YOUR EYES. IF THE ACID DOES TOUCH YOUR EYES, THEN DO NOT RUB THEM. FLUSH YOUR EYES WITH WATER FOR 15 MINUTES AND GET MEDICAL AID IMMEDIATELY.

(1) Prepare the brush chemical conversion coating solution

NOTE: Prepare the solution in small quantities. A solution that is not used in 24 hours is not usable and should be thrown away A dirty solution is unsatisfactory.

(2) Mix 3 ounces of Turcoat Alumigold powder and 1 gallon of deionized or distilled water in a polyethylene, stainless steel or equivalent container.

(3) Mix until the powder is dissolved.

(4) Let the solution stand at least 1 hour before it is used.

NOTE: If you mix with non-distilled water, add nitric acid to control the pH Use pHydrion papers to find the pH level.

- For the Turcoat Alumigold B, the pH should be 1.60 to 1 90.

F. Prepare the surface for chemical conversion coating application.

(1) Mask all of the surface areas that need protection from running, splashing or dripping of the solution.

(a) Seal or plug all possible entry points to assemblies with honeycomb or foam plastic components with an applicable sealing or caulking material or with rubber plugs.

(b) Painted, anodized or previously conversion coated surfaces do not need to be masked.

BOEING PROPRIETARY - Copyright © - Unpublished Work - See title page for details.

(2) Clean the area to be chemical conversion coated with a solvent or degreaser and a clean brush or rags. Dry with warm air or wipe dry.

(3) Remove all of the finish and protective coating from the repair area. Remove the anodized, chemical conversion coatings mechanically with:

(a) Tycol, Type 3A, very fine aluminum oxide wheels attached to a drill motor or,

(b) Scotch-Brite pad, Type A or

(c) 400 grit aluminum oxide paper

(4) Clean until all signs of organic or inorganic coatings are gone and only a bright shiny aluminum surface shows. Wipe dry with a clean cheesecloth to remove loose particles and residue.

(5) Wipe with a clean cheesecloth moist (not soaked) with solvent, Series 88 or an equivalent solvent. Do this step again and again until no visible residue shows on the cheesecloth after wiping.

(6) Allow a minimum of 15 minutes for the surface to dry.

(7) Remove all corrosion that may have occurred as given in SRM 51-10-6.

(8) Refer to SRM 51-20-4 and AMM 28-11-0 for instructions to clean the structure and the repair parts before the installation of sealant in the integral fuel tanks.

G. Alodine 1200S Solution Application

(1) Apply the Alodine 1200S solution with a fiber or nylon brush or clean, cotton wiper.

(2) Rub the wet surface until a gold color comes into view (after approximately 30 seconds).

CAUTION: THE COATING IS SOFT WHEN IT IS INITIALLY APPLIED. USE CARE WHEN THE SURFACE IS FLUSHED AND DRIED. IF YOU DO NOT USE CARE, YOU WILL SCRATCH, OR POSSIBLY REMOVE THE COATING.

(3) Flush the surface with clean water and wipe it dry with clean, cotton wipers.

(4) Let the surface dry for 1 to 3 hours.

(5) Apply a finish or start an adhesive bond as soon as possible after the surface is dry.

H. Iridite 14-2 Solution Application

(1) Apply the Iridite 14-2 solution with a fiber or nylon brush or clean, cotton wipers.

(2) Rub the wet surface until a gold color comes into view (after approximately 30 seconds).

CAUTION: THE COATING IS SOFT WHEN IT IS INITIALLY APPLIED. USE CARE WHEN THE SURFACE IS FLUSHED AND DRIED. IF YOU DO NOT USE CARE, YOU WILL SCRATCH OR POSSIBLY REMOVE THE COATING.

BOEING PROPRIETARY - Copyright © - Unpublished Work - See title page for details.

(3) Flush the surface with clean water and wipe it dry with clean, cotton wipers.

(4) Let the surface dry 1 to 3 hours.

(5) Apply a finish or start an adhesive bond as soon as possible after the surface is dry.

I. Turcoat Alumigold Solution Application

(1) Apply the Turcoat Alumigold solution with a fiber or nylon brush or clean, cotton wiper.

(2) Rub the set surface until a gold color comes into view (after approximately 30 seconds).

CAUTION: THE COATING IS SOFT WHEN IT IS INITIALLY APPLIED. USE CARE WHEN THE SURFACE IS FLUSHED AND DRIED. SCRATCHES AND REMOVAL OF COATING CAN RESULT. IF YOU DO NOT USE CARE, YOU WILL SCRATCH, OR POSSIBLY REMOVE THE COATING.

(3) Flush the surface with clean water and wipe it dry with clean, cotton wipers.

(4) Let the surface dry 1 to 3 hours.

(5) Apply a finish or start an adhesive bond as soon as possible after the surface is dry.

4. Magnesium Alloys - Conversion Coating

A. Magnesium alloys are highly susceptible to corrosion when the metal surface is exposed to the environment without a protective finish. An oxide-carbonate film will normally form on an exposed magnesium alloy surface but this film provides very little protection against corrosion. A proper protective finish is therefore required.

B. All magnesium alloy surfaces that have been reworked must be cleaned and treated with a conversion coating.

C. Materials Required:

(1) Chromic Acid

(2) Calcium Sulfate

(3) Cheesecloth

(4) Solvent - General Cleaning of Metal (Series 80) (Refer to SOPM 20-30-80)

(5) Sodium Hydroxide

(6) Sulfuric Acid

BOEING PROPRIETARY - Copyright © - Unpublished Work - See title page for details.

D. Prepare the Solution

NOTE: The solution must be prepared and stored in polyethylene or glass container.

(1) Fill a clean polyethylene or glass container to the 9/10 level with distilled water.

(2) Slowly add 1-1/3 fluid ounce (39.5 milliliters) of chromic acid per gallon of final solution.

(3) Add 1 fluid ounce (29.6 milliliters) of calcium sulfate per gallon of final solution.

(4) Fill to final solution level with distilled water.

(5) Stir vigorously for 15 minutes to ensure that the solution is saturated with calcium sulfate.

(6) Let solution stand for 15 minutes to allow undissolved calcium sulfate to settle to the bottom of the container.

(7) Decant to another polyethylene or glass container without transferring undissolved calcium sulfate.

(8) Adjust pH with additions of Sodium Hydroxide or Sulfuric Acid to bring within a range of 1.2 to 1.6.

E. Prepare the surface for conversion coating.

(1) Mask all surfaces likely to be affected by running, dripping, or splashing of the solution.

(2) Seal or plug all holes, gaps, and inlets to assemblies containing honeycomb or foam plastic with suitable sealing or caulking material or rubber plugs to prevent entry of any solution.

(3) Wipe treatment area with dry clean cheesecloth to remove loose particles and residue.

(4) Wipe with cheesecloth dampened (not saturated) with solvent, Series 80 (Refer to AMM 20-60-3 and SOPM 20-30-80) Repeat using clean cheesecloth until no visible residue transfers to the cheescloth.

(5) Allow to dry to a minimum of 15 minutes

F. Apply the conversion coating

CAUTION: SEVERE RUBBING OF WET SURFACE CAN CAUSE COATING DAMAGE.

(1) Apply solution by swabbing with brush, swab, swatches, cellulose sponge, or white blotting paper. Maintain a continuous wet film until metal surface becomes dull golden or dark brown in color. Discard used solution.

BOEING PROPRIETARY - Copyright © - Unpublished Work - See title page for details.

(2) Rinse with cold clean water.

CAUTION: DO NOT DIRECT HIGH PRESSURE AIR TO SURFACE WHILE DRYING AS COATING IS STILL SOFT.

(3) Allow to dry at ambient temperature. If possible, use low pressure air to dry the surface.

(4) Restore the original finish as soon as possible after drying. Handle parts with clean gloves and keep parts clean and dry to avoid surface contamination. Refer to AMM 51-20-0

5. Steel - Cadmium Plating Procedures

A. Non-corrosion resistant steel parts that you use for repairs must be cadmium plated for maximum protection from corrosion.

B Oxidation is not a problem with corrosion-resistant steel parts But, steel parts are cathodic when they touch dissimilar metals. Steel parts should be cadmium plated, because they can become a cathode and cause corrosion.

C. To provide maximum protection from corrosion, you must cadmium plate and prime all steel repair parts.

(1) For the procedures to apply cadmium plating, refer to SOPM 20-42-01 and SOPM 20-42-05. For procedures to prime the surface, refer to SOPM 20-41-02.

NOTE: As an option, you can use a cadmium-free plating procedure This procedure uses zinc-nickel to plate the surface. Refer to SOPM 20-41-01, Decoding Table for Boeing Finish Codes. The correct finish codes for zinc-nickel plating are F-15.40 and F-15.401

You must not use the zinc-nickel plating procedure on the following groups of parts:

- Parts that are heat-treated to 220,000 psi (1,516,900 kiloNewtons/m^2)
- All types of gears
- All threaded parts
- Parts that require plating and a phosphate treatment of the surface

(2) Refer to the paragraph that follows, for the correct data when to apply cadmium plating and priming to corrosion resistant steel (CRES) repair parts.

D. Corrosion resistant steels (CRES) contain more than 14 percent by weight of chromium and less than 0.2 percent carbon. These types of steels are very corrosion resistant.

(1) Corrosion resistant steels usually do not require more protection by plating or a protective finish, other than a passivatation treatment that removes surface contamination and will keep a thin stable oxide layer on the surface

BOEING PROPRIETARY - Copyright © - Unpublished Work - See title page for details.

(2) Galvanic corrosion will occur when corrosion resistant steels touch a dissimilar metal surface. Thus, when you use corrosion resistant steels with a dissimilar metal, the corrosion resistant steel must receive a surface finish to provide protection from galvanic corrosion.

(3) Always use corrosion resistant steel parts that are cadmium plated and primed in areas where galvanic corrosion will occur.

NOTE: As an option, you can use a cadmium-free plating procedure. This procedure uses zinc-nickel to plate the surface. Refer to SOPM 20-41-01, Decoding Table for Boeing Finish Codes. The correct finish codes for zinc-nickel plating are F-15.40 and F-15.401.

You must not use the zinc-nickel plating procedure on the following groups of parts:

- Parts that are heat-treated to 220,000 psi (1,516,900 kiloNewtons/m^2)
- All types of gears
- All threaded parts
- Parts that require plating and a phosphate treatment of the surface

WARNING: DO NOT BREATHE THE VAPORS WHEN YOU WORK WITH ALCOHOLIC-PHOSPHORIC SOLUTIONS. ALWAYS USE MECHANICAL VENTILATION AND RESPIRATORY PROTECTION. DO NOT LET THESE SOLUTIONS TOUCH YOUR CLOTHING. ALWAYS WEAR A FACE SHIELD, AND USE PROTECTIVE GLOVES, BOOTS AND CLOTHING. IF YOU DO NOT OBEY, THEN AN INJURY TO PERSONNEL CAN OCCUR.

DO NOT PERMIT THESE SOLUTIONS TO TOUCH YOUR SKIN. IF IT DOES, THEN WASH THE AREA WITH LARGE AMOUNTS OF WATER AND GET MEDICAL AID IMMEDIATELY.

DO NOT PERMIT THESE SOLUTIONS TO TOUCH YOUR EYES. IF IT DOES, THEN FLUSH YOUR EYES WITH WATER FOR 15 MINUTES AND GET MEDICAL AID IMMEDIATELY.

KEEP THESE SOLUTIONS AWAY FROM SOURCES OF HEAT FIRE OR SPARKS.

E Until the reworked surfaces of the steel parts can be cadmium plated, apply a protective coating to the surfaces that are heat-treated to less than 220,000 psi (1,516,900 kiloNewtons/m^2) Do the steps that follow.

(1) Wipe the surface clean with a cloth or brush dipped in one of these two alcoholic-phosphoric solutions:

(a) Turco prepaint alcoholic-phosphoric solution

(b) Kelite polycote

BOEING PROPRIETARY - Copyright © - Unpublished Work - See title page for details.

(c) An aqueous solution containing:

1) 10 percent by volume - phosphoric acid

2) 10 percent by volume - butyl cellulose

3) 0.1 percent by volume - Triton X-100 wetting agent

NOTE: Do not allow solution to dry on the surface.

(2) Rinse with a water-soaked rag.

(3) Wipe the surface dry.

(4) Apply two layers of BMS 10-11, Type I primer as given in AMM 51-21-0.

6. Protective Treatment of Mating Surfaces

A. Each metal and metal alloy has an inherent electrical potential. When these materials touch other materials of a different or higher potential and an electrolyte is present, galvanic corrosion may be the result.

NOTE: Galvanic corrosion will cause pitting in the higher potential material.

B. Metals that have different electrical potentials are classified into four groups.

(1) The four groups are given in Fig. 1.

(2) Each classification is taken from the surface metal or in more basic terminology, the base metal of a non-plated part, or the deposited metal of a plated or coated part.

C. Even though the graphite material in Carbon Fiber Reinforced Plastic (CFRP) is classified as a non-metal, it is still an electrically conductive material.

- This material has an electrolytic reaction with metals and metal alloys from other material groups where they have a mating surface, or with fasteners made from dissimilar metals or other dissimilar materials.

NOTE: You can use one ply of fiberglass fabric as an electrolytic barrier between the CFRP and from dissimilar metals of other type of dissimilar material.

D. See Fig. 2 for the protective finishes that you must use on the mating surface of two dissimilar metals before they are placed into contact and fastened or bonded together

E. The protective treatments given in Fig. 3 are satisfactory for field type repairs where you need the procedure to be fast and simple. Refer to AMM 51-21-0 to apply the internal or external finish.

BOEING PROPRIETARY - Copyright © - Unpublished Work - See title page for details.

7. Protective Treatment for Fastener Installation

A. See Fig. 3 to find the correct treatment for fasteners to protect them from galvanic corrosion.

B If a fastener needs a protective coating, then install the fastener wet with BMS 5-95 sealant material (the preferred method) or install the fastener wet with BMS 10-11, Type I primer. But, you are not permitted to use these two materials in the areas that follow:

(1) On unpainted exterior surfaces. Install fasteners wet with MIL-TT-P-1757, zinc chromate primer Install removable fasteners wet with MIL-C-11796, Class 3 corrosion preventative compound.

(2) Integral fuel tanks. Refer to SRM 51-20-4 and AMM 28-11-0.

(3) Where you use removable close tolerance fasteners. Install these fasteners with MIL-C-11796, Class 3 corrosion preventative compound.

(4) Torqued fasteners located in areas where you do not use close tolerance holes. Coat holes with BMS 10-11, Type I primer and allow to dry before you install the fasteners.

(5) 5056 aluminum fasteners and all non-aluminum fasteners that go through exterior primary structure. Install wet with BMS 5-95 sealant; refer to BAC 5000 for installation procedures.

(6) Hand driven 5056 aluminum rivets that are installed in 2024 aluminum alloy. Install wet with BMS 5-95 sealant; refer to BAC 5000 for installation procedures.

(7) In areas where the dry installation of fasteners is necessary, or where it is necessary to install fasteners with BMS 5-26, and BMS 5-63 sealant materials. Refer to SRM 51-20-4 and the specific component repair sections.

(8) In fireshield areas. Install the fasteners wet with DeSoto Hi-Temp primer (BAC 5710, Type 51). Refer to SOPM 20-44-01.

C. Install permanent fasteners that are not made from aluminum alloys with one of the sealant materials that follow, (specific examples are hex-drive bolts, lockbolts, CRES bolts and titanium bolts):

(1) With BMS 5-95 sealant material (the preferred method), or

(2) With BMS 10-11, Type I primer in the fastener holes and around the fastener heads if they are located in the external fuselage structure, the external skin of the landing gear doors, and all metal fairings that does not include wheel well structure.

NOTE: If you use BMS 10-11, Type I primer, then the fasteners must be installed before the 4 hour cure time has expired.

If you use BMS 5-95 sealant material, then install the fasteners before the pot life of the sealant has expired. Refer to SRM 51-20-0.

D. If you use aluminum rivets with shaved heads and are in an area with an unpainted anodized aluminum alloy surface, then you must manually apply a clear coating of Alodine 1000.

BOEING PROPRIETARY - Copyright © - Unpublished Work - See title page for details.

8. The Use of Solvent-Dispersed Corrosion-Inhibiting Compounds for Corrosion Protection

A. General Information about Solvent-Dispersed Corrosion-Inhibiting Compounds

(1) Use solvent-dispersed corrosion-inhibiting compounds to stop corrosion when the finish is damaged. These compounds can get into very small cavities and push the water out Thus, this compound can get between mating surfaces, or between fasteners and the fastener holes where the finish is broken.

(2) These compounds are volatile liquids which can be sprayed, swabbed or brushed on different surfaces. Corrosion inhibitors are durable materials that are not easily removed by normal use.

(3) When you use these compounds on the external surfaces of the airplane, they can be resistant to surface cleaning for a short amount of time. But after a specified amount of time, given by your airplane maintenance schedule, it will be necessary to replace the layer of solvent-dispersed corrosion-inhibiting compound.

NOTE: Do an analysis of your airplane's flight-cycle environment Write down where you use all of the solvent-dispersed corrosion-inhibiting compounds on the airplane, and the schedule with which they were applied. This will make sure that the airplane has sufficient corrosion protection during its service life.

(4) The Boeing Company recommends that you use one of the following compounds.

(a) BMS 3-23.

(b) BMS 3-29

(c) A layer of BMS 3-26 above BMS 3-23.

NOTE: Some other type of solvent-dispersed corrosion-inhibiting compounds may be satisfactory, but only if it is approved for use as a solvent-dispersed corrosion-inhibiting compound. The airline operator can approve the use of their own solvent-dispersed corrosion-inhibiting compounds, if they have experience in the use of these materials.

(5) BMS 3-23, BMS 3-26 and BMS 3-29 are organic compound. These compounds are non-volatile base materials. They are mixed with a solvent to make the compound more liquid.

NOTE: These compounds do not contain silicones.

(6) BMS 3-23, BMS 3-26 and BMS 3-29 can be applied with an airless paint spray pump, an aerosol can, or with a brush.

BOEING PROPRIETARY - Copyright © - Unpublished Work - See title page for details.

(7) The three types of solvent-dispersed corrosion-inhibiting compounds are listed below.

(a) BMS 3-23

1) BMS 3-23 is a solvent-dispersed, water-displacing, corrosion-inhibiting compound. There are two types of BMS 3-23 compounds.

- Type I leaves a transparent, colorless film, which can be seen by the use of an ultraviolet light.

- Type II leaves a colored film, which can be seen under visible light by a visual inspection.

2) After BMS 3-23 dries, it leaves a thin layer of wax-like material on the surface.

3) Surfaces which have had certain types of BMS 3-23 products applied, will stay tacky, and will then collect unwanted material. Thus, those surfaces must be regularly cleaned, and then more of the BMS 3-23 must be applied.

NOTE: This does not include Dinitrol AV-8, LPS Hardcoat, or ZCO23, which are not tacky after they dry.

4) The time interval to clean the surface, and then to apply more BMS 3-23 will change with its location on the airplane.

5) Refer to the Airline Maintenance Planning Document or the manufacturer's written instructions for specific application procedures.

(b) BMS 3-26

1) BMS 3-26 is a heavy-duty, solvent-dispersed, corrosion-inhibiting compound. There are two types of BMS 3-26 compounds

- Type I leaves a continuous, medium-thick colored film which can be seen under visible light by a visual inspection.

- Type II leaves a continuous, thick, colored film which can be seen under visible light by a visual inspection.

2) BMS 3-26 does not have the same ability to go into small cavities like BMS 3-23 or BMS 3-29.

3) Surfaces, which have had BMS 3-26 products applied, will become dry to the touch after approximately 6 hours

4) After BMS 3-26 dries, it leaves a thick, translucent layer of wax-like material on the surface.

5) The layer of BMS 3-26 is not easily worn off. But it must be applied once again, if the surface has been cleaned.

BOEING PROPRIETARY - Copyright © - Unpublished Work - See title page for details.

(c) BMS 3-29

1) BMS 3-29 is an advanced, heavy duty, solvent-dispersed, water-displacing corrosion-inhibiting compound. There is only one type of BMS 3-29 compound.

- It leaves a continuous, thick, colored film, which can be seen under visible light by a visual inspection.

2) Surfaces which have had BMS 3-29 products applied, will become dry to the touch after approximately 4 hours.

3) After BMS 3-29 dries, it leaves a thick, translucent layer of wax-like material on the surface.

4) The layer of BMS 3-29 is not easily worn off. But it must be applied once again, if the surface has been cleaned.

(8) Refer to SRM 51-20-3, Fig. 1, for the products and product suppliers that are qualified to BMS 3-23, BMS 3-26 and BMS 3-29.

(9) Solvent-dispersed corrosion-inhibiting compounds can be applied to those areas of the airplane structure, where corrosion has started or where it may occur at a later date.

(a) If corrosion is present, then apply the solvent-dispersed corrosion-inhibiting compound to the area.

(b) The application of these solvent-dispersed corrosion-inhibiting compounds is only a temporary measure, until the corrosion is removed from the area.

(10) Solvent-dispersed corrosion-inhibiting compounds will not decrease the initial torque on fasteners. But, their application should be limited to those approved areas of aluminum structure where corrosion is likely to occur.

Some examples of these type of areas include:

(a) Surfaces that are exposed to the atmosphere during operation.
Examples: the wing leading edge and trailing edge cavities, the spar chords, and the faying surface edges between the chords and the spars.

(b) Structure, where water might collect and not drain away.
Example: Fuselage bilge area.

(c) Structure, which can corrode due to contact with corrosive liquids.
Examples: the structures below the galleys, and the lavatories.

(d) Rivets and bolts after their installation, when no other type of finish has been applied.

(e) All faying surface edges, where the paint, the primer or the sealant can in any way deteriorate.

(f) Areas where the decorative paint film has broken down around the fasteners. (This is to inhibit "filiform" corrosion)

BOEING PROPRIETARY - Copyright © - Unpublished Work - See title page for details.

(g) All other locations on the airplane where corrosion has been detected.

(11) During the manufacture of certain airplanes, solvent-dispersed corrosion-inhibiting compounds were applied to specified locations of the airframe structure for added protection against corrosion.

(12) If you do rework or repair in these areas, you should apply the solvent-dispersed corrosion-inhibiting compounds again. Refer to Fig 4 for the locations of the these areas.

(13) For additional procedures on the use of solvent-dispersed corrosion-inhibiting compounds to control and prevent corrosion, refer to the Boeing Corrosion Prevention Manual, D6-41910.

B. Precautions for the Use of solvent-dispersed corrosion-inhibiting Compounds.

WARNING: SOLVENT-DISPERSED CORROSION-INHIBITING COMPOUNDS ARE APPROXIMATELY EQUAL TO KEROSENE OR ALIPHATIC NAPHTHA IN TOXICITY. TO PROTECT THE SKIN, USE THE SAME PRECAUTIONS AS FOR KEROSENE.

IF YOU USE THESE COMPOUNDS IN AN EXTREMELY CONFINED AREA, MECHANICAL VENTILATION IS MANDATORY. RESPIRATORY AND SKIN PROTECTION IS ALSO NECESSARY.

AS A FIRE SAFETY PRECAUTION, SOLVENT-DISPERSED CORROSION-INHIBITING COMPOUNDS SHOULD BE KEPT AWAY FROM ANY SURFACE THAT CAN GET TO TEMPERATURES HIGHER THAN RECOMMENDED BY THE MANUFACTURER FOR SAFETY.

SOLVENT-DISPERSED CORROSION-INHIBITING COMPOUNDS CONTAIN FLAMMABLE COMPONENT MATERIALS. DO NOT PERMIT THESE MATERIALS TO COME IN CONTACT WITH OPEN FLAMES, ACTIVE ELECTRICAL CIRCUITS, OR OTHER ELECTRICAL COMPONENTS. IF YOU DO NOT OBEY, A POSSIBLE FIRE AND AN EXPLOSION CAN OCCUR. THESE COMPOUNDS ALSO CONTAIN VOLATILE CARRIER MATERIALS, THAT ARE VERY FLAMMABLE. THUS, YOU MUST USE THE CORRECT SAFETY PRECAUTIONS UNTIL THE COMPOUND HAS FULLY DRIED.

WHEN MIXED WITH OXYGEN, SOLVENT-DISPERSED CORROSION-INHIBITING COMPOUNDS ARE POTENTIALLY EXPLOSIVE. KEEP THEM CLEAR OF ALL TYPES OF OXYGEN-TYPE SYSTEM COMPONENTS.

REFER TO THE MANUFACTURER'S MATERIAL SAFETY DATA SHEETS, OR SPEAK TO THE MANUFACTURER FOR THEIR HEALTH AND SAFETY INFORMATION, PERTAINING TO THE USE OF THESE HAZARDOUS MATERIALS.

TO DISCARD HAZARDOUS WASTE MATERIALS, SPEAK TO THE RESPONSIBLE POLLUTION CONTROL MONITORING ORGANIZATION FOR THEIR APPLIABLE PROCEDURES.

(1) Make sure that oxygen system components are shielded to protect them from any type of contamination.

BOEING PROPRIETARY - Copyright © - Unpublished Work - See title page for details.

(2) Protect electrical connectors and electrical contacts from possible contamination.

(3) Use a clean, dry rag to remove unwanted solvent-dispersed corrosion-inhibiting compounds from mechanisms, and their moving parts A thin film is sufficient for corrosion protection while a build-up of these compounds can become hard at low temperatures. A large build-up can reduce the operating efficiency of the moving parts

(4) Protect control cables, pulleys, Teflon bearings and lubricated surfaces from the direct application of corrosion-inhibiting compounds.

(a) Some of the materials contain volatile hydrocarbons, which can act as a solvent on the lubricant.

(b) Destruction of the lubricants can result in higher than normal wear on the parts.

(5) Use care when you apply solvent-dispersed corrosion-inhibiting compounds around seals or other areas that contain rubber materials.

(a) Some locations include, the door and emergency hatch seals, the grease seals in bearing assemblies, and the rubber-lined clamps for tubing and wiring.

(b) The solvent-dispersed corrosion-inhibiting compounds may cause the rubber seals to swell, and then cause the seals to fail.

(c) Hydraulic fluid (Skydrol) seals can also be affected. Thus, solvent-dispersed corrosion-inhibiting compounds are not applicable for use on any type of actuator rod

(6) Do not apply these compounds near the engines, the engine cowling or other areas of high temperature, or where you use a firewall sealant. Solvent-dispersed corrosion-inhibiting compounds can cause deterioration to this type of sealant material.

CAUTION: REFER TO SOPM 20-41-05 IF THE INSULATION BLANKET HAS CONTAMINATION BY CORROSION-INHIBITING COMPOUNDS. THESE COMPOUNDS CAN CAUSE THE INSULATION BLANKET TO BE MORE FLAMMABLE.

(7) Protect insulation blankets from the solvent-dispersed corrosion-inhibiting compounds Solvent-dispersed corrosion-inhibiting compounds can decrease the function of these blankets to repel water.

C. Equipment and Materials for Applying Solvent-dispersed Corrosion-inhibiting Compounds.

(1) Masking Tape

(2) Solvent Materials - P-D-680 or an equivalent solvent material. Refer to SRM 51-20-3

(3) Solvent Wipes - cheesecloth, gauze, new or laundered rags, tissue paper, or any other type of absorbent material

(4) Protective caps with an enclosure, for the exposed oxygen system tubing

BOEING PROPRIETARY - Copyright © - Unpublished Work - See title page for details.

D. Surface Preparation

WARNING: IF THE AREA TO BE TREATED WITH SOLVENT-DISPERSED CORROSION-INHIBITING COMPOUNDS IS IN A VERY CONFINED AREA, THEN MECHANICAL VENTILATION IS MANDATORY
ALSO, RESPIRATORY AND SKIN PROTECTION MAY BE NECESSARY.

CAUTION: DISCONNECT ALL SOURCES OF POWER WHEN YOU USE SOLVENT-DISPERSED CORROSION-INHIBITING COMPOUNDS. THESE POWER SOURCES CAN BE BATTERY-OPERATED OR ELECTRICAL EQUIPMENT.

THIS IS VERY IMPORTANT TO REMEMBER WHEN YOU ARE NEAR ANY FLAMMABLE MATERIALS, OR WHEN IT IS NECESSARY TO USE A LARGE AMOUNT OF WATER. FAILURE TO DO THIS CAN CAUSE A DANGEROUS FIRE OR A SEVERE ELECTRICAL SHOCK.

SOLVENT-DISPERSED CORROSION-INHIBITING COMPOUNDS, OR ANY TYPE OF HYDROCARBON, WHEN APPLIED TO A SILICONE OR ETHYLENE PROPYLENE RUBBER WILL CAUSE IT TO SWELL AND PREVENT IT FROM PERFORMING ITS FUNCTION CORRECTLY.

(1) Remove all external power sources.

(2) Statically ground the airplane. Refer to AMM 20-70-1, for Static Grounding Instructions.

(3) Vacuum all necessary surfaces to remove any unwanted materials.

(4) Clean the surface area with an applicable solvent material.

NOTE: Clean areas, that are to be treated, to increase the entry of the solvent-dispersed corrosion-inhibiting compound into exposed surfaces of the structure and also into faying surfaces.

(5) Isolate all areas that do not need to be treated with solvent-dispersed corrosion-inhibiting compounds. Use masking tape and paper, or a plastic film.

(6) Isolate all electrical connectors to prevent any contamination of the electrical contacts.

(7) Isolate oxygen system components from any direct or indirect contact, when you apply the solvent-dispersed corrosion-inhibiting compound to the adjacent structure.

(8) Build a protective barrier around control cables, pulleys, bearings and lubricated surfaces, to protect them from solvent-dispersed corrosion-inhibiting compounds.

(9) Allow new primer or paint to dry for a minimum of 8 hours before you apply a solvent-dispersed corrosion-inhibiting compound.

(10) Make sure a sealant has fully cured on a surface before you can apply a solvent-dispersed corrosion-inhibiting compound.

BOEING PROPRIETARY - Copyright © - Unpublished Work - See title page for details.

E. How to Apply Solvent-Dispersed Corrosion-Inhibiting Compounds.

NOTE: Solvent-dispersed corrosion-inhibiting compounds usually contain hydrocarbons; thus you are permitted to apply a different compound over the old compound. This will not cause a problem because the two compounds have equivalent chemical properties.

(1) Solvent-dispersed corrosion-inhibiting compounds contain a solvent carrier, with a low surface tension, which will help in displacing existing water from a metal surface.

(2) As the solvent dries, a thin film is left behind, to act as a barrier to prevent a chemical reaction that causes corrosion between the metal and water, or other substances in the environment.

(a) Solvent-dispersed corrosion-inhibiting compound will go into cracks and crevices through capillary action. It is not necessary to use pressure spraying.

(b) Refer to SRM 51-20-3 for sources of solvent-dispersed corrosion-inhibiting compounds.

(3) You can apply solvent-dispersed corrosion-inhibiting compounds to an area with only a general cleaning of the surface.

(4) Solvent-dispersed corrosion-inhibiting compounds can be applied with an airless paint spray pump, or by an aerosol can or a brush.

(a) The location, and how well you can access an area, will show you the best method to apply a solvent-dispersed corrosion-inhibiting compound.

(b) Apply one coat on top of another coat, but if the initial coat is contaminated with dirt or other solids, it must be cleaned before you apply another coat over it.

(c) Refer to par. 8.H.(3) for a list of solvents that you can use for cleaning solvent-dispersed corrosion-inhibiting compounds.

(5) Subsequent layers of solvent-dispersed corrosion-inhibiting compounds can be added if the surface is still clean. If the surface is not clean, it must be cleaned before another layer is applied.

(6) Solvent-dispersed corrosion-inhibiting compounds can only be applied to areas specified by applicable engineering data.

(7) When you apply additional finishes, such as paint, primer or sealant material, to a surface, it cannot be easily done. This is because of the penetrating properties of the solvent-dispersed corrosion-inhibiting compounds, and from possible bleed-out at the faying surfaces.

(8) Obey all the precautions given by the manufacturer, along with the precautions given in par. 8.B., when you apply solvent-dispersed corrosion-inhibiting compounds.

(9) Apply BMS 3-23, Type I and Type II at a temperature range between 40 to 100°F (4 to 38°C).

(10) Apply BMS 3-26, Type I at a temperature range between 40 to 100°F (4 to 38°C).

BOEING PROPRIETARY - Copyright © - Unpublished Work - See title page for details.

(11) Apply BMS 3-26, Type II at a temperature range between 50 to 100°F (10 to 38°C).

(12) Apply BMS 3-29 at a temperature range between 40 to 100°F (4 to 38°C).

(13) Mechanical ventilation must be supplied, when working in an enclosed area.

(14) Apply a continuous coat of solvent-dispersed corrosion-inhibiting compound, so it will go into a jointed area by capillary action.

(15) Apply at a spray rate of 1 gallon per hour (3.79 liters per hour) to cover a surface at a rate of approximately 15 to 20 square feet per minute (1.4 to 1.9 square meters per minute).

(16) The 1 gallon per hour (3.79 liters per hour) spray rate will give a film thickness of:

(a) 0.002 inch to 0.006 inch (0.051 to 0.152 millimeters) for BMS 3-26, Type I

(b) 0.008 inch to 0.012 inch (0.203 to 0.305 millimeters) for BMS 3-26, Type II

(c) 0.006 inch to 0.010 inch (0.152 to 0.254 millimeters) for BMS 3-29

NOTE: Minimum coating thicknesses for BMS 3-23 have not been established, but use a continuous coating to cover the entire surface.

(17) These compounds can also be brushed, or swabbed to the thicknesses shown above.

(18) The use of pressure equipment to apply these compounds directly to the joints is recommended.

(a) Allow the solvent-dispersed corrosion-inhibiting compound to remain on the surface for 60 minutes before any unwanted compound is removed.

(b) This will make sure that the maximum quantity of compound will go into the jointed area, where the compound has been applied.

(c) Refer to par. 8.F for spraying procedures and pressure equipment.

(19) Remove any excess solvent-dispersed corrosion-inhibiting compound from a treated surface using a clean wiper or clean gauze.

NOTE: If you let more of the compound stay on the surface than is necessary; it will not give the area better corrosion protection.

(20) Remove all of the used masking tape, protective paper or plastic film from the area.

(21) Give the area a good flow of air over the surface, until the volatile solvents are removed.

(a) The cure time for BMS 3-23 Type I and Type II is approximately 1 hour.

(b) The cure time for BMS 3-26 Type I and Type II is approximately 6 hours.

(c) The cure time for BMS 3-29 is approximately 4 hours.

BOEING PROPRIETARY - Copyright © - Unpublished Work - See title page for details.

(22) Solvent-dispersed corrosion-inhibiting compounds contain wax compounds and are not to be applied to surfaces that have a temperature of more than 140°F (60°C).

F Procedures to Apply BMS 3-23, BMS 3-26 and BMS 3-29

(1) The Spray Procedure

(a) The Boeing Company recommends that you apply this compound with an approved pressure pot system and an airless spray gun. The operating pressure should be approximately 45 pounds per square inch (310.3 KiloNewtons per square meter) or less.

NOTE: If necessary, you can use an aerosol can with a plastic nozzle extension, but The Boeing Company does not recommend this procedure to apply solvent-dispersed corrosion-inhibiting compounds. This is because of the cost and the amount of overspray supplied by the nozzle extension.

(b) Spray equipment can be purchased from the following suppliers:

1) Nordson Corporation, 555 Jackson St., Amhearst, Ohio, 44001-2408

2) Binks Manufacturing Company, 9201 West Belmont Ave., Franklin Park, Illinois, 60131-2807

3) Graco Incorporated, 60 11th Ave. N.E., P.O. Box 1441, Minneapolis, Minnesota 55440

4) ITW DeVilbiss Industrial Spray Equipment, 1724 Indian Wood Circle, Maumee, Ohio 43537-4048

(c) You will be able to get better access to an area, if you use a spray gun extension kit and a swivel adapter so that you can change the position of the nozzle.

(d) Use approved air atomizing equipment (a siphon or a pressure pot) when there is sufficient access to apply a wet coat of sealant. A spray with a nozzle-to-surface distance of no more than 12 inches (30.5 cm) is necessary for wet application, and can be done by the use of an applicable nozzle extension.

(2) The Brush Procedure

(a) Apply the compound with a paint brush or a clean cloth. Use this procedure for smaller areas, or where extreme caution is necessary. Do not apply the solvent-dispersed corrosion-inhibiting compound to an unwanted area.

(b) For larger areas, or where access is not a problem, the spray procedure is recommended.

G Exterior Discoloration Caused by Solvent-Dispersed Corrosion-Inhibiting Compounds

(1) When you use a large amount of solvent-dispersed corrosion-inhibiting compound, on the internal surfaces of the airplane, some discoloration of the external surfaces of the airplane may occur. This is called "bleed-through", and can occur because these materials can go through the mechanically fastened structural joints to the external surface of the airplane.

BOEING PROPRIETARY - Copyright © - Unpublished Work - See title page for details.

(2) A "bleed-through" situation can be expected at fastener locations that are not fluid-tight. This is normal and it is not necessary to replace the fasteners The tiny passages will seal themselves in a short time.

(3) Solvent-dispersed corrosion-inhibiting compounds can bleed-through and stain the decorative finish of the airplane. A difference in oxidation that you can see on the external surface can occur between those areas where you apply the compound, and those areas where you do not.

(4) It is recommended that you frequently clean the airplane in those areas where streaking of the solvent-dispersed corrosion-inhibiting compound occurs, or if it looks like it will leave a permanent stain on the surface of the airplane.

H. Removal of Solvent-Dispersed Corrosion-Inhibiting Compound

WARNING: SOLVENT-DISPERSED CORROSION-INHIBITING COMPOUNDS ARE APPROXIMATELY EQUAL TO KEROSENE OR ALIPHATIC NAPHTHA IN TOXICITY TO PROTECT THE SKIN, USE THE SAME PRECAUTIONS AS FOR KEROSENE.

IF YOU USE THESE COMPOUNDS IN AN EXTREMELY CONFINED AREA, MECHANICAL VENTILATION IS MANDATORY. RESPIRATORY AND SKIN PROTECTION IS ALSO NECESSARY

REFER TO THE MANUFACTURER'S MATERIAL SAFETY DATA SHEETS, OR SPEAK TO THE MANUFACTURER FOR THEIR HEALTH AND SAFETY INFORMATION, PERTAINING TO THE USE OF THESE HAZARDOUS MATERIALS.

TO DISCARD HAZARDOUS WASTE MATERIALS, SPEAK TO THE RESPONSIBLE POLLUTION CONTROL MONITORING ORGANIZATION FOR THEIR APPLICABLE PROCEDURES.

NOTE: The complete removal of solvent-dispersed corrosion-inhibiting compound is necessary, before you can try to paint or apply a sealant to a surface.

(1) A complete solvent cleaning is also necessary before you can do a penetrant inspection of the area.

(2) Give the area a good flow of air until all of the solvent material is gone

(3) Use the following solvent materials to remove solvent-dispersed corrosion-inhibiting compounds:

(a) Aliphatic Naphtha

(b) Biogenic SE377C

(c) Citra-Safe

NOTE: Methyl-Ethyl-Ketone (MEK) or acetone is not recommended by The Boeing Company.

BOEING PROPRIETARY - Copyright © - Unpublished Work - See title page for details.

9. Repairs for Finish Cracks on Graphite Composite Parts

A. General

(1) If you have finish cracks, then:

- Moisture can go into the cracks in the finish, which can cause the finish to come off.

- Sunlight can damage the bare composite surface at the locations where the finish has come off.

(2) Cracks in the resin, without fiber damage, are not a flight safety problem.

B. Interim repair

NOTE: The outboard aileron, elevator and rudder have operational balance limits. Measure the static balance moment after each interim repair. The static balance moment must not be larger than the operational balance limit. Refer to SRM 51-81 for the correct balancing procedure.

If three interim repairs on a given component have been done, one after the other, then you must do a permanent repair. You must measure the static balance moment after you complete the repair.

(1) Fine the level of damage.

WARNING: IF YOU WORK WITH SOLVENTS AND COMPOSITE MATERIALS, THEN YOU MUST USE APPROVED GLOVES, PROTECTIVE CLOTHING, AND MECHANICAL VENTILATION OR RESPIRATORY PROTECTION. ALSO USE EYE PROTECTION.

KEEP THE SOLVENTS AWAY FROM SOURCES OF HEAT, FIRE, OR SPARKS. IF YOU DO NOT OBEY, AN EXPLOSION COULD OCCUR.

CAUTION: DO NOT USE PAINT STRIPPERS TO REMOVE THE FINISH. PAINT STRIPPERS WILL CAUSE DAMAGE TO THE RESIN SYSTEM. WHEN THE SURFACE IS SANDED, FIBERS IN THE COMPOSITE OR THE SURFACE BELOW THE BARE COMPOSITE MUST NOT BE DAMAGED OR PERMITTED TO BE OPEN TO THE AIR. IF YOU DO NOT OBEY, DECREASE IN THE STRUCTURAL STRENGTH OF THE COMPONENT WILL OCCUR. FIBERS WHICH HAVE NO PROTECTION OR ARE DAMAGED MUST BE REPAIRED.

(2) Use No. 240 or finer Scotch-Brite, or abrasive paper, to remove cracks in the finish. Total removal of the top layer of finish is not necessary. Make sure that you do not sand into the fibers.

NOTE: The recommended abrasive is No. 240 Scotch-Brite.

BOEING PROPRIETARY - Copyright © - Unpublished Work - See title page for details.

(3) Use a clean cheesecloth to clean the area with a 50/50 mixture (by volume) of Methyl Ethyl Ketone (MEK) and Toluene. Wipe the area dry with a clean cheeseloth before the solvent dries.

(4) Apply a finish to the repair area. Refer to SRM 51-40-13, para. 2.H.

C. Permanent Repairs

(1) General Information

(a) There are two permanent repair alternatives.

- The first repair alternative uses BMS 5-95. BMS 5-95 will seal the cracks so that water cannot get into the composite.

- The second repair alternative uses a BMS 9-3 wet layup. Refer to SRM 51-20-3 for the sources of repair materials.

(2) Alternative 1: BMS 5-95 Permanent Repair

(a) Find the level of damage.

WARNING: IF YOU WORK WITH SOLVENTS AND COMPOSITE MATERIALS, THEN YOU MUST USE APPROVED GLOVES, PROTECTIVE CLOTHING, AND MECHANICAL VENTILATION OR RESPIRATORY PROTECTION. ALSO USE EYE PROTECTION.

KEEP THE SOLVENTS AWAY FROM SOURCES OF HEAT, FIRE, OR SPARKS. IF YOU DO NOT OBEY, AN EXPLOSION COULD OCCUR.

CAUTION: DO NOT USE PAINT STRIPPERS TO REMOVE THE FINISH. PAINT STRIPPERS WILL CAUSE DAMAGE TO THE RESIN SYSTEM. WHEN THE SURFACE IS SANDED, FIBERS IN THE COMPOSITE OR THE SURFACE BELOW THE BARE COMPOSITE MUST NOT BE DAMAGED OR PERMITTED TO BE OPEN TO THE AIR. IF YOU DO NOT OBEY, A DECREASE IN THE STRUCTURAL STRENGTH OF THE COMPONENT WILL OCCUR. FIBERS WHICH HAVE NO PROTECTION OR ARE DAMAGED MUST BE REPAIRED.

WHEN YOU DO ABRASIVE BLAST PROCEDURES IN AREAS WHERE LUBRICATION FLUIDS OR GREASE ARE APPLIED, USE CARE TO PREVENT CONTAMINATION OF THE LUBRICANT WITH THE BLAST RESIDUE. THIS CONTAMINATION CAN AFFECT THE LUBRICATION PROPERTIES AND THE RESULT CAN BE INCREASED WEAR OF THE LUBRICATED PARTS.

WHEN YOU USE ALTERNATIVE MEDIA BLASTING PROCEDURES: THERE MUST BE NO FIBER DAMAGE WITH A 10% MAGNIFIER IS USED. AFTER THE FINISH IS REMOVED DO AN ULTRASONIC THROUGH TRANSMISSION TEST. REFER TO PART 4, 51-00-03 OF THE 737 NONDESTRUCTIVE TEST MANUAL, D6-37239.

BOEING PROPRIETARY - Copyright © - Unpublished Work - See title page for details.

(b) Remove all finishes to the graphite composite surface. Use No. 240 or finer Scotch-Brite, or abrasive paper, to remove the finishes. Do not sand into the fibers.

NOTE: The recommended abrasive is No. 240 Scotch-Brite.

Use of alternative media blasting procedure for finish removal is structurally satisfactory. The procedure must agree with the requirements given in D6-55564, "Requirements for Alternative Paint Stripping Processes".

(c) Use a clean cheesecloth to clean the area with a 50/50 mixture (by volume) of Methyl Ethyl Ketone (MEK) and Toluene. Wipe the area dry with a clean cheesecloth before the solvent dries.

(d) There are two alternatives to find the level of damage:

1) Use a 5X to 10X magnifier to examine the bare composite surface for surface cracks.

2) Apply pinhole filler to the bare composite surface. If there is too much filler, remove the unwanted filler.

(e) There are cracks in the surface below the bare composite:

1) If you see a white pattern on the surface.

2) If that pattern did not occur when the surface was sanded.

(f) If there are no cracks, apply a finish to the repair area. Refer to SRM 51-40-13, para. 2.H.

(g) If there are cracks, continue the procedure.

(h) Mix BMS 5-95 Class F spray sealant base and accelerator to a ratio of 15 to 1 by weight (a ratio of 100 to 6.9 by volume). Add 20 percent of a 50/50 (by volume) mixture of MEK and Toluene to make the mixture thinner. The pot life of the material mixture is 1.5 hours at 75°F (24°C).

(i) Use an air spray at a minimum of 50 psi to apply 2 layers of BMS 5-95 to the repair surface. Each layer must be applied continuously to a wet film thickness of 0.005-0.008 inch (0.127-0.203 mm thick). Let the surface dry in the air for 15 minutes after the first layer is applied. The dry film thickness of the two layers must be 0.006-0.010 inch thick (0.152-0.254 mm).

(j) Let the surface dry for a minimum of 2 hours at 60° To 130°F (16° to 54°C) after the second layer is applied.

(k) Apply a finish to the repair area. Refer SRM to 51-40-13, para. 2.H. The use of primer is not necessary.

BOEING PROPRIETARY - Copyright © - Unpublished Work - See title page for details.

(3) Alternative II: BMS 8-301/BMS 9-3 Fiberglass Wet Layup Permanent Repair (Method 1)

(a) Find the level of damage.

WARNING: WHEN YOU WORK WITH SOLVENTS AND COMPOSITE MATERIALS, USE APPROVED GLOVES, PROTECTIVE CLOTHING, AND MECHANICAL VENTILATION OR RESPIRATORY PROTECTION. USE EYE PROTECTION.

KEEP THE SOLVENTS AWAY FROM SOURCES OF HEAT, FIRE, OR SPARKS. AN EXPLOSION COULD OCCUR.

CAUTION: DO NOT USE PAINT STRIPPERS TO REMOVE THE FINISH. PAINT STRIPPERS WILL CAUSE DAMAGE TO THE RESIN SYSTEM. WHEN THE SURFACE IS SANDED, FIBERS IN THE COMPOSITE OR THE SURFACE BELOW THE BARE COMPOSITE MUST NOT BE DAMAGED OR PERMITTED TO BE OPEN TO THE AIR. IF YOU DO NOT OBEY, A DECREASE IN THE STRUCTURAL STRENGTH OF THE COMPONENT WILL OCCUR. FIBERS WHICH HAVE NO PROTECTION OR ARE DAMAGED MUST BE REPAIRED.

WHEN YOU DO ABRASIVE BLAST PROCEDURES IN AREAS WHERE LUBRICATION FLUIDS OR GREASE ARE APPLIED, USE CARE TO PREVENT CONTAMINATION OF THE LUBRICANT WITH THE BLAST RESIDUE. THIS CONTAMINATION CAN AFFECT THE LUBRICATION PROPERTIES AND THE RESULT CAN BE INCREASED WEAR OF THE LUBRICATED PARTS.

WHEN YOU USE ALTERNATIVE MEDIA BLASTING PROCEDURES: THERE MUST BE NO FIBER DAMAGE WITH A 10% MAGNIFIER IS USED. AFTER THE FINISH IS REMOVED DO AN ULTRASONIC THROUGH TRANSMISSION TEST. REFER TO PART 4, 51-00-03 OF THE 737 NONDESTRUCTIVE TEST (NDT) MANUAL, D6-37239.

(b) Remove all finishes to the graphite composite surface. Use No. 240 or finer Scotch-Brite, or abrasive paper, to remove the finishes. Do not sand into the fibers.

NOTE: The recommended abrasive is No. 240 Scotch-Brite.

Use of alternative media blasting procedure for finish removal is structurally satisfactory. The procedure must agree with the requirements given in D6-55564, "Requirements for Alternative Paint Stripping Processes".

(c) Use a clean cheesecloth to clean the area with a 50/50 mixture (by volume) of Methyl Ethyl Ketone (MEK) and Toluene. Wipe the area dry with a clean cheesecloth before the solvent dries.

(d) There are two alternatives to find the level of damage:

1) Use a 5X to 10X magnifier to examine the bare composite surface for surface cracks.

BOEING PROPRIETARY - Copyright © - Unpublished Work - See title page for details.

2) Apply pinhole filler to the bare composite surface. If there is too much filler, remove the unwanted filler.

(e) There are cracks in the surface below the bare composite:

1) If you see a white pattern on the surface.

2) If that pattern did not occur when the surface was sanded.

(f) If there are no cracks, apply a finish to the repair area. Refer to SRM 51-40-13, para. 2.H.

(g) If there are cracks, continue the procedure.

(h) Cut a piece of BMS 9-3 Style 120 fiberglass as large as the tool side surface area to be repaired. Weight the piece of fiberglass. This is the weight of laminating resin necessary to impregnate the fabric.

(i) Mid the BMS 8-301 Class 1 (Hysol EA 9390A) or BMS 8-301 Class 2 (FR 7020) (part A) and hardener (part B) to the proportions given in the manufacturer's instructions. Mix Parts A and B by hand for 2 to 3 minutes to cause a constant mixture.

(j) Weigh out the quantity of resin calculated in para. 9.C.(3)(d). This resin must be used less than 2 hours after it is mixed.

(k) Brush apply an initial thin layer of resin to fill in any cracks or areas that have been pushed in.

1) Apply the BMS 9-3 Style 120 fiberglass. Put the remaining resin over the fiberglass. Use a tool with a rigid, flat edge to equally apply the resin over the fiberglass. Put one layer of solid FEP parting film over the side of the repair area that the tool is used on. Use the tool to apply the resin as equally as possible. Remove as much porosity as possible. Push the surface resin to the edges.

(m) Vacuum bag the repair. Refer to SRM 51-40-13, para. 2.F. for Class 1 resin. Refer to SRM 51-40-12, para. 2.F. for Class 2 resin.

(n) Cure the repair. Refer to SRM 51-40-13, para. 2.G. for Class 1 resin. Refer to SRM 51-40-12, para. 2.G. for Class 2 resin.

NOTE: It is optional to cure the Class 1 resin repair at 180° ±10°F (82° ±6° C).

(o) Visually examine the repair for porosity on the surface.

(p) If there is porosity on the surface, make the surface rough with No. 240 or finer Scotch-Brite or abrasive paper. Apply resin to the surface. Use a tool with a rigid, flat edge to equally apply the resin. Cure the resin. Refer to SRM 51-40-12, para. 2.G. for Class 2 resin.

(q) Apply a finish to the repair area. Refer to SRM 51-40-13, para. 2.H. for Class 1 resin. Refer to SRM 51-40-12, para. 2.H. for Class 2 resin.

BOEING PROPRIETARY - Copyright © - Unpublished Work - See title page for details.

(4) Alternative II: BMS 8-301/BMS 9-3 Fiberglass Wet Layup Permanent Repair (Method 2).

(a) Find the level of damage.

WARNING: IF YOU WORK WITH SOLVENTS AND COMPOSITE MATERIALS, THEN YOU MUST USE APPROVED GLOVES, PROTECTIVE CLOTHING, AND MECHANICAL VENTILATION OR RESPIRATORY PROTECTION. ALSO USE EYE PROTECTION.

KEEP THE SOLVENTS AWAY FROM SOURCES OF HEAT, FIRE, OR SPARKS. AN EXPLOSION COULD OCCUR.

CAUTION: DO NOT USE PAINT STRIPPERS TO REMOVE THE FINISH. PAINT STRIPPERS WILL CAUSE DAMAGE TO THE RESIN SYSTEM. WHEN THE SURFACE IS SANDED, FIBERS IN THE COMPOSITE OR THE SURFACE BELOW THE BARE COMPOSITE MUST NOT BE DAMAGED OR PERMITTED TO BE OPEN TO THE AIR. IF YOU DO NOT OBEY, A DECREASE IN THE STRUCTURAL STRENGTH OF THE COMPONENT WILL OCCUR. FIBERS WHICH HAVE NO PROTECTION OR ARE DAMAGED MUST BE REPAIRED.

WHEN YOU DO ABRASIVE BLAST PROCEDURES IN AREAS WHERE LUBRICATION FLUIDS OR GREASE ARE APPLIED, USE CARE TO PREVENT CONTAMINATION OF THE LUBRICANT WITH THE BLAST RESIDUE. THIS CONTAMINATION CAN AFFECT THE LUBRICATION PROPERTIES AND THE RESULT CAN BE INCREASED WEAR OF THE LUBRICATED PARTS.

WHEN YOU USE ALTERNATIVE MEDIA BLASTING PROCEDURES: THERE MUST BE NO FIBER DAMAGE WITH A 10% MAGNIFIER IS USED. AFTER THE FINISH IS REMOVED DO AN ULTRASONIC THROUGH TRANSMISSION TEST. REFER TO PART 4, 51-00-03 OF THE 737 NONDESTRUCTIVE TEST (NDT) MANUAL, D6-37239.

(b) Remove all finishes to the graphite composite surface. Use No. 240 or finer Scotch-Brite, or abrasive paper, to remove the finishes. Do not sand into the fibers.

NOTE: *The recommended abrasive is No. 240 Scotch-Brite.*

Use of alternative media blasting procedure for finish removal is structurally satisfactory. The procedure must agree with the requirements given in D6-55565, "Requirements for Alternative Paint Stripping Processes".

(c) Use a clean cheesecloth to clean the area with 50/50 mixture (by volume) of Methyl Ethyl Ketone (MEK) and Toluene. Wipe the area dry with a clean cheesecloth before the solvent dries.

(d) *There are two alternatives to find the level of damage:*

1) Use a 5X to 10X magnifier to examine the bare composite surface for cracks.

BOEING PROPRIETARY - Copyright © - Unpublished Work - See title page for details.

2) Apply pinhole filler to the bare composite surface. If there is too much filler, remove the unwanted filler.

(e) There are cracks in the surface below the bare composite:

1) If you see a white pattern on the surface.

2) If that pattern did not occur when the surface was sanded.

(f) If there are no cracks, apply a finish to the repair area. Refer to SRM 51-40-13, para. 2.H.

(g) If there are cracks, continue the procedure.

(h) Cut one piece of fabric the same dimension as the repair area. Cut two pieces of solid parting film, make them three inches larger than the fabric.

(i) Put one piece of solid parting film on a smooth surface. Hold the solid parting film to the surface with tape.

(j) Weigh the fabric to be impregnated. Multiply the weight by 1.3. This is the weight of laminating resin necessary to impregnate he fabric.

NOTE: The resin to fiber content will be approximately 1 to 1 by weight after the parting film is separated.

(k) Mix the BMS 8-301 Class 1 (Hysol EA 9390A) or BMS 8-301 Class 2 (FR 7020) resin (part A) and hardener (part B) to the proportions given in the manufacturer's instructions. Mix Parts A and B by hand for 2 to 3 minutes to cause a constant mixture.

(l) Put half of the laminating resin in the center of the solid parting film.

(m) Put the fabric above the solid parting film and laminating resin.

(n) Put the remaining laminating resin over fabric in the center.

(o) Put the second piece of solid parting film above the fabric. Make sure the solid parting film is smooth.

(p) Sweep the resin from the center to the edge of the fabric. Make the resin and fabric smooth. Keep all of the resin in the fabric.

(q) Vacuum bag the repair. Refer to SRM 51-40-13, para. 2.F. for Class 1 resin. Refer to SRM 51-40-12, para. 2.F. for Class 2 resin.

(r) Cure the repair. Refer to SRM 51-40-13, para. 2.G. for Class 1 resin. Refer to SRM 51-40-12, para. 2.G. for Class 2 resin

NOTE: It is optional to cure the Class 1 resin repair at 180□±10°F (82□ ±6° C).

BOEING PROPRIETARY - Copyright © - Unpublished Work - See title page for details.

(s) Visually examine the repair for porosity on the surface.

(t) If there is porosity on the surface, make the surface rough with No. 240 or finer Scotch-Brite or abrasive paper. Apply resin to the surface. Use a tool with a rigid, flat edge to equally apply the resin. Cure the resin. Refer to SRM 51-40-12, par. 2.G. for Class 2 resin.

(u) Apply a finish to the repair area. Refer to SRM 51-40-13, par. 2 H. for Class 1 resin. Refer to SRM 51-40-12, par. 2.H. for Class 2 resin.

GROUP I	MAGNESIUM AND ITS ALLOYS. ALUMINUM ALLOYS 1100, 5052, 5056, 5356, 6061, 6063. BERYLIUM
GROUP II	CADMIUM, ZINC, ALUMINUM AND THEIR ALLOYS (INCLUDES GROUP 1 ALUMINUM ALLOYS) [B]
GROUP III	IRON, LEAD, TIN, AND THEIR ALLOYS (EXCEPT CORROSION RESISTANT STEEL) [A] . DIFFUSED NICKEL-CADMIUM
GROUP IV	COPPER, CHROMIUM, NICKEL, SILVER, GOLD, PLATINUM, TITANIUM AND THEIR ALLOYS. CORROSION RESISTANT STEEL [A] . COBALT AND RHODIUM AND THEIR ALLOYS. MONEL, INCONEL, BRASS, BRONZE. GRAPHITE FIBER, FABRIC OR TAPE [C] .
MEMBERS OF ANY ONE GROUP ARE SIMILAR. MEMBERS OF DIFFERENT GROUPS ARE DISSIMILAR.	

Classification of Dissimilar Materials
Figure 1

NOTES

[A] CORROSION RESISTANT STEEL CONTAINS 14% OR MORE CHROMIUM

[B] EXCEPT FOR 5056 RIVETS DRIVEN IN 2024, 2224 OR 2324 ALUMINUM ALLOYS

[C] GRAPHITE IS AN ELECTRICALLY CONDUCTIVE MATERIAL EVEN THOUGH IT IS CLASSIFIED AS A NON-METAL

BOEING PROPRIETARY - Copyright © - Unpublished Work - See title page for details.

MATERIAL	FINISH ON FAYING SURFACES OTHER THAN THOSE TO BE BONDED OR SITUATED IN INTEGRAL FUEL TANKS, INCLUDING THOSE EXPOSED TO HYDRAULIC FLUID [B] [C]		SURFACES TO BE STRUCTURALLY BONDED	SURFACES IN INTEGRAL FUEL TANKS
	SIMILAR METALS [A]	DISSIMILAR METALS [A] [D]		
BARE ALUMINUM ALLOYS [E]	CHEMICAL CONVERSION COAT SEE PAR. 2) AND APPLY ONE COAT OF BMS 10-11, TYPE 1 PRIMER TO EACH SURFACE	CHEMICAL CONVERSION COAT SEE PAR. 2) AND APPLY TWO COATS OF BMS 10-11, TYPE 1 PRIMER TO EACH SURFACE [F]	REFER TO SRM 51-40-5	REFER TO SRM 57-10-3
NON-CORROSION RESISTANT STEEL	CADMIUM PLATE (REFER TO STANDARD OVERHAUL PRACTICES, D6-51702) AND APPLY ONE COAT OF BMS 10-11, TYPE 1 PRIMER TO EACH SURFACE	CADMIUM PLATE [G] (REFER TO STANDARD OVERHAUL PRACTICES, D6-51702) AND APPLY TWO COATS OF BMS 10-11, TYPE 1 PRIMER TO EACH SURFACE		
CORROSION RESISTANT STEEL (CRES)	NONE	CADMIUM PLATE [G] (REFER TO STANDARD OVERHAUL PRACTICES, D6-51702) AND APPLY TWO COATS OF BMS 10-11, TYPE 1 PRIMER TO EACH SURFACE		
METALS LISTED IN FIGURE 1 GROUP IV OTHER THAN CRES	NONE	APPLY TWO COATS OF BMS 10-11, TYPE 1 PRIMER TO EACH SURFACE		
CLAD ALUMINUM ALLOY AND OTHER METALS NOT LISTED ABOVE.	APPLY TWO COATS OF BMS 10-11, TYPE 1 PRIMER TO EACH SURFACE	APPLY TWO COATS OF BMS 10-11, TYPE 1 PRIMER TO EACH SURFACE		
GRAPHITE	NONE REQUIRED	BOND ONE PLY OF FIBERGLASS FABRIC AND APPLY ONE COAT OF BMS 10-11 TYPE I PRIMER TO EACH SURFACE UP TO 4.0 AWAY FROM DISSIMILAR MATERIAL. PROTECT CUT EDGES WITHIN 4.0 OF DISSIMILAR MATERIAL WITH BMS 5-92 ADHESIVE	REFER TO SRM 51-40-12, SRM 51-40-13, SRM 51-40-14, SRM 51-40-15	

Protective Finishes for Mating Surfaces
Figure 2 (Sheet 1)

BOEING PROPRIETARY - Copyright © - Unpublished Work - See title page for details.

NOTES

A REFER TO FIG. 1 FOR GROUPING OF SIMILAR AND DISSIMILAR METALS

B ALL NON-BONDED FUSELAGE, WING, AND ENGINE PYLON SKIN FAYING SURFACES REQUIRE A FAYING SURFACE SEAL APPLIED ACCORDING TO SRM 51-20-4 IN ADDITION TO PRIMER

C HYDRAULIC FLUID, FIRE RESISTANT, BMS 3-11

D ALL NON-BONDED FAYING SURFACES OF DISSIMILAR METALS REQUIRE A FAYING SURFACE SEAL APPLIED ACCORDING TO SRM 51-20-4 IN ADDITION TO PRIMER. FAY SEALED SURFACES REQUIRE ONLY ONE PRIMER COAT

E WHEN PRACTICAL, IT IS PREFERABLE THAT BARE ALUMINUM SURFACES BE CHROMIC ACID ANODIZED. REFER TO 20-43-01 OF THE STANDARD OVERHAUL PRACTICES MANUAL, D6-51702

F ALUMINUM ALLOYS IN CONTACT WITH GRAPHITE REQUIRE A CHEMICAL CONVERSION COATING TREATMENT, ONE COAT OF BMS 10-79 TYPE III PRIMER AND ONE COAT OF BMS 10-60 TYPE I ENAMEL. DO NOT USE CLAD 7075 IN CONTACT WITH GRAPHITE.

G CADMIUM PLATE IS NOT ALLOWED TO BE IN CONTACT WITH GRAPHITE MATERIAL

Protective Finishes for Mating Surfaces
Figure 2 (Sheet 2)

BOEING PROPRIETARY - Copyright © - Unpublished Work - See title page for details.

FASTENER MATERIAL IN CONTACT WITH STRUCTURE	MATERIAL IN CONTACT WITH FASTENER			
	MAGNESIUM AND MAGNESIUM ALLOYS	ALUMINUM ALLOYS, CADMIUM AND ZINC PLATE	LEAD, TIN, BARE IRON AND CARBON OR LOW ALLOY STEELS	CORROSION RESISTANT STEELS NICKEL AND COBALT BASE ALLOYS, TITANIUM, COPPER, BRASS, CHROME PLATE AND GRAPHITE
ALUMINUM EXCEPT 5056	A	B	A	A F
ALUMINUM ALLOY 5056	B	E	A	A F
CADMIUM OR ZINC PLATE	A	C	A	D F
CHROME PLATE	A	A	A	B F
UNPLATED CORROSION RESISTANT STEEL	A	A	A	G
NICKEL OR COBALT BASE ALLOYS	A	A	A	G
UNPLATED TITANIUM	A	A	A	B

NOTES

- REFER TO PAR. 6 FOR REQUIRED PROTECTIVE TREATMENT.

A PROTECTIVE TREATMENT IS NECESSARY.

B PROTECTIVE TREATMENT IS NOT NECESSARY.

C PROTECTIVE TREATMENT IS NOT NECESSARY EXCEPT FOR CADMIUM PLATED ALLOY STEEL BOLTS THROUGH ALUMINUM ALLOYS IN CRITICAL CORROSION AREAS.

D PROTECTIVE TREATMENT NECESSARY EXCEPT FOR CORROSION RESISTANT STEEL FASTENERS IN MATERIALS LISTED IN FIG. 1 GROUP IV. DO NOT INSTALL CADMIUM PLATED FASTENERS IN TITANIUM STRUCTURE.

E PROTECTIVE TREATMENT IS NOT NECESSARY EXCEPT FOR 5056 RIVETS DRIVEN IN 2024, 2224 AND 2324 ALUMINUM ALLOYS.

F NOT PERMITTED IN GRAPHITE MATERIAL

G PROTECTIVE TREATMENT IS NOT NECESSARY EXCEPT FOR FASTENERS INSTALLED IN GRAPHITE MATERIAL.

Protective Treatment for Fastener Installation
Figure 3

BOEING PROPRIETARY - Copyright © - Unpublished Work - See title page for details.

FUSELAGE	INTERIOR	• ABOVE MAIN CABIN FLOOR 1 ALL SEAT TRACKS UNDER GALLEYS. 2 UNDER ALL ENTRY AND SERVICE DOOR SCUFF PLATES [B] 3 UNDER TOILET COMPARTMENTS 4 FORWARD SURFACE OF PRESSURE BULKHEAD BELOW WL 230 5. ALL STRUCTURE BELOW WL 230 STATION 277 TO STATION 299 4 • BELOW MAIN DABIN FLOOR: 1 ALL STRUCTURE (FLOOR, BEAMS, SKIN AND STRINGERS, ETC) BELOW GALLEYS, LAVATORIES AND ENTRYWAYS 2 STRUCTURE (FRAMES, SKINS AND STRINGERS, ETC) IN ALL PRESSURIZED SECTIONS BETWEEN STRINGERS S-26L AND S-26R (BILGE AREAS) 3 ALL STRUCTURE (FLOOR BEAMS, FRAMES, STRINGERS, SKIN, ETC.) BETWEEN CARGO DECK AND MAIN CABIN FLOOR STATION 270 TO STATION 363 4 UNDER CARGO DOOR SCUFF PLATES [B] 5 ALL STRUCTGURE IN FORWARD AIRSTAIR, ELECTRONIC BAY ACCESS AND FORWARD ACCESS DOOR OPENINGS INCLUDING INNER SURFACE OF SKIN.
	EXTERIOR	1 STRUCTURE COVERED BY WING TO BODY FAIRING INCLUDING RAM AIR INLET
WING		1 STRUCTURE COVERED BY WING TO BODY FAIRING. 2 EXTERIOR OF REAR SPAR IN AREA OF AILERONS 3 ALL SURFACES OF WING DRY BAY AREAS (INSPAR) 4 EXTERIOR OF WING CENTER SECTION INCLUDING BL 40.00 RIB ADJACENT TO RAM AIR INLET 5 BETWEEN WING SPARS, OUTBOARD OF THE SURGE TANK 6 INTERIOR OF MID FLAPS. 7 INTERIOR SURFACE OF WING CENTER SECTION 3 INCHES UP FROM LOWER SKIN INCLUDING AFT SURFACE OF FRONT SPAR, FORWARD SURFACE OF REAR SPAR, BOTH SURFACES OF NO 1 AND NO. 2 SPANWISE BEAMS AND INBOARD SURFACES OF BBL 70 85 RIBS [H]
VERTICAL FIN AND HORIZONTAL STABILIZER [B]		1 EXTERIOR SURFACE OF REAR SPAR ON FIN AND STABLIZER INCLUDING ELEVATOR AND RUDDER HINGE SUPPORT RIBS IN REAR SPAR CAVITY 2 LOWER SURFACE OF LOWER CLOSURE RIB ON FIN INCLUDING FRON TAND REAR SPAR TERMINAL FITTINGS 3 INBOARD SURFACE OF INBOARD CLOSURE RIB ON STABILIZER INCLUDING FRONT AND REAR SPAR TERMINAL FITTINGS
LANDING GEAR		1 INSIDE SURFACES OF NOSE LANDING GEAR TORSION LINK ATTACHMENT PINS AND AXLE 2 INSIDE SURFACES OF MAIN LANDING GEAR TORSION LINK ATTACHMENT PINS

BASIC INSTALLATION [A]

The Application of Solvent-Dispersed Corrosion-Inhibiting Compounds to the Aircraft Structure
Figure 4 (Sheet 1)

BOEING PROPRIETARY - Copyright © - Unpublished Work - See title page for details.

FUSELAGE	INTERIOR	• ABOVE MAIN CABIN FLOOR. 1. ALL SEAT TRACKS UNDER GALLEYS 2. UNDER ALL ENTRY AND SERVICE DOOR SCUFF PLATES 3 UNDER TOILET COMPARTMENTS 4 FORWARD SURFACE OF PRESSURE BULKHEAD BELOW WL 230. 5 ALL STRUCTURE BELOW WL 230 STATION 277 TO STATION 299 4. 6 LOWER 3 TO 4 INCHES ON INTERIOR STRUCTURE OF FORWARD GALLEY, AFT GALLEY, FORWARD ENTRY AND AFT ENTRY DOOR [D] 7. ENTIRE SURFACE OF PRESSURE BULKHEAD RING CHORD [E] 8 FORWARD AND AFT GALLEY DOOR INTERIOR STRUCTURE [I] 9. FORWARD AND AFT ENTRY DOOR INTERIOR STRUCTURE. [I] 10. EMERGENCY HATCH INTERIOR STRCTURE [I] • BELOW MAIN DABIN FLOOR: 1 ALL STRCTURE (FLOOR, BEAMS, SKIN AND STRINGERS, ETC.) BELOW GALLEYS, LAVATORIES AND ENTRYWAYS 2. STRUCTURE (FRAMES, SKINS AND STRINGERS, ETC) IN ALL PRESSURIZED SECTIONS BETWEEN STRINGERS S-26L AND S-26R (BILGE AREAS) 3 ALL STRUCTURE (FLOOR BEAMS, FRAMES, STRINGERS, SKIN, ETC) BETWEEN CARGO DECK AND MAIN CABIN FLOOR STATION 351 2 TO STATION 363. 4 ALL STRUCTURE (FLOOR BEAMS, FRAMES, STRINGERS, SKIN, ETC) BETWEEN CARGO DECK AND MAIN CABIN FLOOR STATION 907 TO 941 5 5 UNDER CARGO DOOR SCUFF PLATES. 6. ALL STRUCTURE IN FORWARD AIRSTAIR, ELECTRONIC BAY ACCESS, AND FORWARD ACCESS DOOR OPENINGS INCLUDING INNER SURFACE OF SKIN 7. APPROXIMATELY 3 INCHES UP ON PRESSURE SIDE OF NOSE WHEEL WELL SIDEWALL. [D] 8 ALL STRUCTURE (FLOOR BEAMS, FRAMES, STRINGERS, SKIN, ETC.) BETWEEN CARGO DECK AND MAIN CABIN FLOOR STATION 520 AND STATION 540 [D] 9. INTERIOR SURFACE AND 3 INCHES UP SIDEWALL OF KEEL BEAM STATION 501 70 TO STATION 742.95. [D] 10. APPROXIMATELY LOWER 10 INCHES ON AFT SIDE OF PRESSURE BULKHEAD (STA 1016) AND APPROXIMATELY 8 INCHES AFT ON SKIN [D] 11 LOWER 3 TO 4 INCHES ON INTERIOR STRUCTURE OF AFT AND FORWARD CARGO DOORS 12 ELECTRONIC BAY ACCESS DOOR INTERIOR STRUCTURE. [I]
	EXTERIOR	1 STRUCTURE COVERED BY WING TO BODY FAIRING

BASIC INSTALLATION [C]

The Application of Solvent-Dispersed Corrosion-Inhibiting Compounds
to the Aircraft Structure
Figure 4 (Sheet 2)

BOEING PROPRIETARY - Copyright © - Unpublished Work - See title page for details.

WING	1 EXTERIOR OF REAR SPAR IN AREA OF AILERONS. 2. ALL SURFACES OF WING DRY BAY AREAS (INSPAR) 3. BETWEEN WING SPARS, OUTBOARD OF THE SURGE TANK 4 INTERIOR OF MID FLAPS. 5. MAIN LANDING GEAR BEAM FAYING SURFACES AT INBOARD AND OUTBOARD ATTACH POINTS. [F] 6 FORWARD FACE OF WING FRONT SPAR FROM ROOT TO WBL 546. [I] 7 AFT FACE OF WING REAR SPAR FROM ROOT TO WBL 415 [I]
VERTICAL FIN AND HORIZONTAL STABILIZER	1. EXTERIOR SURFACE OF REAR SPAR ON FIN AND STABILIZER INCLUDING ELEVATOR AND RUDDER HINGE SUPPORT RIBS IN REAR SPAR CAVITY. 2 LOWER SURFACE OF LOWER CLOSURE RIB ON FIN INCLUDING FRONT AND REAR SPAR TERMINAL FITTINGS. 3 INBOARD SURFACE OF INBOARD CLOSURE RIB ON STABILIZER INCLUDING FRONT AND REAR SPAR TERMINAL FITTINGS 4 INSPAR STRUCTURE AND FORWARD FACE OF FRONT SPAR ON FIN AND STABILIZER. [G]
LANDING GEAR	1 INSIDE SURFACES OF NOSE LANDING GEAR TORSION LINK ATTACHMENT PINS AND AXLE 2 INSIDE SURFACES OF MAIN LANDING GEAR TORSION LINK ATTACHMENT PINS

BASIC INSTALLATION [C] (CONT)

FUSELAGE	INTERIOR	• ABOVE MAIN CABIN FLOOR: 1. SKIN AND STRINGERS BETWEEN STATIONS 1016 AND 1040 AND AFT FACE OF STATION 1016 PRESSURE BULKHEAD EXCEPT AREA COVERED BY BASIC INSTALLATION. 2 CAVITY OF ALL SEAT TRACKS BETWEEN STATIONS 344 AND 947 3 ALL STRUCTURE ABOVE MAIN CABIN FLOOR BETWEEN STATIONS 260 AND 1016 INCLUDING FORWARD FACE OF STATION 1016 BULKHEAD EXCEPT AREA COVERED BY BASIC INSTALLATION 4. BODY CROWN STRUCTURE BETWEEN STRINGERS S-10L AND S-10R BETWEEN STATIONS 270 AND 1016 INCLUDING THE FORWARD FACE OF STATION 1016 BULKHEAD EXCEPT AREA COVERED BY BASIC INSTALLATION. 5 SKIN AND STRINGERS BETWEEN STATIONS 1040 AND 1088 INCLUDING FORWARD FACE OF STATION 1088 BULKHEAD 6 FORWARD AND AFT GALLEY DOOR INTERIOR STRUCTURE 7. FORWARD AND AFT ENTRY DOOR INTERIOR STRUCTURE 8. EMERGENCY HATCH INTERIOR STRUCTURE. • BELOW MAIN CABIN FLOOR 1 ALL STRUCTURE BETWEEN MAIN CABIN FLOOR AND CARGO DECK BETWEEN STATIONS 907 AND 947 5 INCLUDING AFT SIDE OF STATION 907 FRAME 2 SKIN AND STRINGERS BELOW MAIN CABIN FLOOR BETWEEN STATIONS 520 AND 540 INCLUDING AFT FACE OF FLOOR BEAM AND BULKHEAD AT STATION 520 3. ALL STRUCTURE BETWEEN MAIN CARGO FLOOR AND CARGO DECK STATION 363 TO STATION 520 AND STATION 527 TO STATION 970

INSTALLATIONS PROVIDED AS OPERATOR OPTIONS

The Application of Solvent-Dispersed Corrosion-Inhibiting Compounds to the Aircraft Structure
Figure 4 (Sheet 3)

BOEING PROPRIETARY - Copyright © - Unpublished Work - See title page for details.

FUSELAGE (CONT)	INTERIOR (CONT)	4 PRESSURE SIDE OF BODY SKIN BETWEEN STATIONS 227 8 AND 270 5. FORWARD AIRSTAIR DOOR INTERIOR STRUCTURE 6. ELECTRONIC BAY ACCESS DOOR INTERIOR STRUCTURE 7. UPPER AND LOWER 3 TO 4 INCHES OF AFT AIRSTAIRS DOOR INTERIOR STRUCTURE 8. ALL STRUCTURE IN MAIN WHEEL WELL CAVITY INCLUDING WHEEL WELL FAIRING
WING		1. FORWARD FACE OF FRONT SPAR FROM WING ROOT TO WBL 548 2. AFT FACE OF REAR SPAR FROM WING ROOT TO WBL 415 3. WING CAVITY AFT OF REAR SPAR BETWEEN WBL 525 AND WBL 546. 4. FLAP TRACK SUPPORT FITTINGS AT WBL 254 AND WBL 353. 5 ENGINE THRUST FITTINGS AT WBL 183 AND WBL 199 6 ENGINE MOUNT FITTING AT WBL 183.
VERITCAL FIN AND HORIZONTAL STABILIZER		1 FORWARD FACE OF FIN REAR SPAR FROM ROOT TO TIP. 2 FORWARD FACE OF STABILIZER REAR SPAR FROM ROOT TO TIP 3 FIN INSPAR STRUCTURE AND FORWARD FACE OF FRONT SPAR FROM ROOT TO TIP 4 STABILIZER INSPAR STRUCTURE AND FORWARD FACE OF FRONT SPAR FROM ROOT TO TIP 5 STABILIZER CENTER SECTION STAR TRUSS STRUCTURE.
NACELLE AND PYLON		1 NOSE COWL SURFACE COVERED BY HORSESHOE FAIRING

INSTALLATIONS PROVIDED AS OPERATOR OPTIONS (CONT)

NOTES

- [A] FOR CUM LINE NUMBERS· 285, 290 THRU 318.
- [B] NOT APPLIED ON CUM LINE NUMBER 301.
- [C] FOR CUM LINE NUMBERS: 319 AND ON.
- [D] FOR CUM LINE NUMBERS· 398 AND ON.
- [E] FOR CUM LINE NUMBERS: 412 AND ON.
- [F] FOR CUM LINE NUMBERS. 488 AND ON.
- [G] FOR CUM LINE NUMBERS: 438 AND ON.
- [H] FOR CUM LINE NUMBERS. 285, 290 THRU 310.
- [I] FOR CUM LINE NUMBERS: 599 AND ON.

The Application of Solvent-Dispersed Corrosion-Inhibiting Compounds to the Aircraft Structure
Figure 4 (Sheet 4)

BOEING PROPRIETARY - Copyright © - Unpublished Work - See title page for details.

LOCATION	DRAWING	TITLE	PROTECTIVE TREATMENT
STA 178 THRU STA 277: BETWEEN ALL FLOOR WEBS, STRAPS, DOUBLERS, LAP JOINTS, AND OTHER FLOOR STRUCTURE COMPONENTS EXCEPT FOR REMOVABLE PANELS INSTALLED WITH NUTPLATES			APPLY A FAY SURFACE SEAL. USE BMS 5-95 SEALANT [A]
ALL STRUCTURE THAT CONTACTS THE BODY SKIN BELOW S17 L & R, STA 178 - STA 520 AND STA 727 - STA 1016			APPLY A FAY SURFACE SEAL. USE BMS 5-95 SEALANT [D]
AFT BODY SKIN ATTACHMENT TO STA 727 FRAME			FILLET SEAL AT ALL EDGES, INCLUDING PENETRATING FASTENER SEALING. USE BMS 5-95 SEALANT [D]
FUSELAGE SKIN & STRINGER INSTALLATION	65-45765	STRINGER ASSEMBLY	APPLY BMS 5-89 CORROSION INHIBITING ADHESIVE PRIMER PLUS ONE COAT OF BMS 10-11, TYPE I PRIMER [B]
	65-45770	STRINGER ASSEMBLY	
	65-45772	STRINGER ASSEMBLY	
	65-51696	STRINGER ASSEMBLY	
	65-45767	STRINGER ASSEMBLY	
	65-45768	STRINGER ASSEMBLY	
	65-45769	STRINGER ASSEMBLY	
	65-45774	STRINGER ASSEMBLY	
	65-45775	STRINGER ASSEMBLY	
	65-45776	STRINGER ASSEMBLY	
FUSELAGE SKIN & STRINGER INSTALLATION	65-45800	PANEL ASSEMBLY	
KEEL BEAM INSTALLATION	65-45866	LID ASSEMBLY	
BULKHEAD INSTALLATION	65-46547	CHORD ASSEMBLY	
BULKHEAD INSTALLATION	65-46572	WEB ASSEMBLY	
BULKHEAD INSTALLATION	65-46576		
TAILCONE INSTALLATION	65-46577		
BEAM INSTALLATION	65-46578		
BEAM INSTALLATION	65-46585		
TORQUE BOX INSTALLATION	65-46579		
BULKHEAD INSTALLATION	65-51533		
BULKHEAD INSTALLATION	65-16300		
FRAME INSTALLATION	65-17684		
FUSELAGE SKIN	65-45800		
BULKHEAD INSTALLATION	65-45804		
BULKHEAD INSTALLATION	65-45808		
NOSE GEAR WHEEL WELL INSTALLATION	65-45819		
FLOOR INSTALLATION	65-45833		
RIB INSTALLATION - INSPAR VERTICAL FIN	65-47403		
RIB INSTALLATION - INBOARD HORIZONTAL STAB.	65-47501		
RIB INSTALLATION - HINGE SUPPORT STAB.	65-47528		
RIB/INSTALLATION TRAILING EDGE BEAM SUPPORT STAB.	65-47531		
SPAR INSTALLATION - RUDDER	65-47600	WEB ASSEMBLY	
DOOR INSTALLATION	65-54800	DOOR ASSEMBLY	
FIXED LEADING EDGE & FAIRING INSTALLATION	65-54811		
PANEL ASSEMBLY - LOWER MIDFLAP	65-76133	SKIN ASSEMBLY	
SEAL INSTALLATION - PANEL ASSEMBLIES	65-54991	PANEL ASSEMBLY	
LEADING EDGE INSTALLATION - FIXED HORIZONTAL STAB.	65-54821	SKIN ASSEMBLY	
DOOR INSTALLATION - FRONT SPAR, FIN	65-54815	DOOR ASSEMBLY	

Corrosion Protective Treatment
Figure 5 (Sheet 1)

BOEING PROPRIETARY - Copyright © - Unpublished Work - See title page for details.

LOCATION	DRAWING	TITLE	PROTECTIVE TREATMENT
RIB INSTALLATION - HINGE SUPPORT ELEVATOR	65-47524	WEB ASSEMBLY	APPLY BMS 5-89 CORROSION INHIBITING ADHESIVE PRIMER PLUS ONE COAT OF BMS 10-11, TYPE I PRIMER [B]
RIB - HINGE SUPPORT, STAB.	65-47525	WEB ASSEMBLY	
RIB INSTALLATION - HINGE SUPPORT, STAB.	65-47526	WEB ASSEMBLY	
RIB INSTALLATION - TRAILING EDGE BEAM, SUPPORT, STAB.	65-47527	WEB ASSEMBLY	
RIB INSTALLATION - TRAILING EDGE BEAM, SUPPORT, STAB.	65-47529	WEB ASSEMBLY	
RIB INSTALLATION - HINGE SUPPORT STAB.	65-47530	WEB ASSEMBLY	
FRONT SPAR INSTALLATION - ELEVATOR	65-47588	WEB ASSEMBLY	
RIB INSTALLATION - RUDDER	65-47611	WEB ASSEMBLY	
RIB INSTALLATION - CLOSURE, RUDDER	65-75332	WEB ASSEMBLY	
HINGE RIB - FIN	65-47406	RIB ASSEMBLY	
RIB INSTALLATION - FIN	65-47409	WEB ASSEMBLY	
RIB INSTALLATION - RUDDER	65-47435	WEB ASSEMBLY	
FRONT SPAR - HORIZONTAL STAB.	65-47500	WEB ASSEMBLY	
RIB INSTALLATION - STAB.	65-47528	RIB ASSEMBLY	
RIB INSTALLATION - ELEVATOR	65-47587	WEB ASSEMBLY	
PRIMARY BEAM - CENTER SECTION	65-47597	BEAM ASSEMBLY	
THRUST BEAM - CENTER SECTION	65-47598	BEAM ASSEMBLY	
PANEL INSTALLATION - MIDFLAP	65-47931	PANEL ASSEMBLY	
DOOR INSTALLATION	65-49541	DOOR ASSEMBLY	
SUPPORT INSTALLATION - STAB.	65-51275	WEB ASSEMBLY	
SUPPORT INSTALLATION - BALANCE PANEL	65-52905	WEB ASSEMBLY	
SUPPORT INSTALLATION - BALANCE PANEL	65-52906	WEB ASSEMBLY	
SUPPORT INSTALLATION - BALANCE PANEL	65-52907	WEB ASSEMBLY	
TIP INSTALLATION - ELEVATOR	65-53729	WEB ASSEMBLY	
PANEL INSTALLATION - MIDFLAP	65-71949	PANEL ASSEMBLY	
WING TIP INSTALLATION	65-73719	TIP ASSEMBLY	
FOREFLAP ASSEMBLY - INBOARD FLAP	65-46430	LEADING EDGE SKIN ASSEMBLY AND HONEYCOMB ASSEMBLIES	APPLY ONE COAT OF BMS 10-11, TYPE I PRIMER TO INTERIOR SURFACES AFTER BONDING APPLY ONE COAT OF BMS 10-79, TYPE II PRIMER TO EXTERNAL SURFACES SUBSEQUENTLY ENAMELED [B]
UPPER FORWARD INBOARD MIDFLAP	65-47838	SKIN ASSEMBLY	
PANEL INSTALLATION - UPPER OUTBOARD TRAILING EDGE MIDFLAP	65-47928	PANEL ASSEMBLY	
LOWER INBOARD TRAILING EDGE MIDFLAP	65-47929	PANEL ASSEMBLY	
LOWER OUTBOARD TRAILING EDGE MIDFLAP	65-47930	PANEL ASSEMBLY	
OUTBOARD FOREFLAP	65-49505	HONEYCOMB ASSEMBLY	
UPPER AFT INBOARD MIDFLAP	65-52141	SKIN ASSEMBLY	
LOWER INBOARD MIDFLAP	65-71903	SKIN ASSEMBLY	
	65-70150	PANEL ASSEMBLY	
AFT FLAP ASSEMBLY - OUTBOARD	65-46435	TRAILING EDGE AND SKIN ASSEMBLIES	
REMOVABLE LEADING EDGE INSTALLATION HORIZONTAL STABILIZER	65-73783	SKIN ASSEMBLY	
REMOVABLE LEADING EDGE INSTALLATION FIN.	65-73787	SKIN ASSEMBLY	
MIDFLAP ASSEMBLY - OUTBOARD	65-71909	SKIN ASSEMBLY	
HINGED FLAP ASSEMBLY - OUTBOARD FLAP	65-71930	TRAILING EDGE HONEYCOMB ASSEMBLY	
AFT FLAP ASSEMBLY - INBOARD	65-46434	NOSE SKIN ASSEMBLY	
	65-46482	SPAR ASSEMBLY	

Corrosion Protective Treatment
Figure 5 (Sheet 2)

BOEING PROPRIETARY - Copyright © - Unpublished Work - See title page for details.

LOCATION	DRAWING	TITLE	PROTECTIVE TREATMENT
FRONT SPAR INSTALLATION - INBOARD MIDFLAP	65-46484	WEB ASSEMBLY	
MIDSPAR INSTALLATION - INBOARD MIDFLAP	65-46485	WEB ASSEMBLY	
TRAILING EDGE INSTALLATION	65-46486	TRAILING EDGE ASSEMBLY	
REAR SPAR INSTALLATION - INBOARD MIDFLAP	65-47841	WEB ASSEMBLY	
PANEL INSTALLATION - FIXED WING TIP	65-52121	PANEL ASSEMBLY	APPLY ONE COAT OF BMS 10-11, TYPE I PRIMER TO INTERIOR SURFACES AFTER BONDING
PANEL INSTALLATION - FIXED WING TIP	65-52122	PANEL ASSEMBLY	
INSPAR & TRAILING EDGE INSTALLATION, VERTICAL FIN	65-73790	SKIN ASSEMBLY	
AILERON	65-46456	NOSE AND SPAR ASSEMBLIES	APPLY ONE COAT OF BMS 10-79, TYPE II PRIMER TO EXTERNAL SURFACES SUBSEQUENTLY ENAMELED [B]
REAR SPAR INSTALLATION - INBOARD MIDFLAP	65-47839	REAR SPAR ASSEMBLY	
LOWER AFT INBOARD MIDFLAP	65-47840	SKIN ASSEMBLY	
INSPAR AND TRAILING EDGE INSTL, VERTICAL FIN	65-73790	DOOR ASSEMBLY	
REMOVABLE LEADING EDGE INSTALLATION - VERTICAL FIN	65-73787	SKIN ASSEMBLY	APPLY ONE COAT OF BMS 10-11, TYPE I PRIMER ON INTERIOR SURFACES AFTER BONDING [C]

NOTES

[A] FOR AIRPLANES WITH CUM LINE NUMBERS: 957 THRU 994,989,992,997 THRU 999,1001 THRU 1016,1021 THRU 1453,1486 (BOEING REF: P4344,P4346-P4399,P4801-P5499, P8979-P9995)

[B] FOR AIRPLANES WITH CUM LINE NUMBERS: 950 AND ON

[C] FOR AIRPLANES WITH CUM LINE NUMBERS: 989,992,1002,1040,1059,1084,1093,1097, 1099,1117,1143,1151,1154,1155,1165,1167, 1176,1178,1186,1189,1194,1197,1199 (BOEING REF: PJ010-PJ029,PK275-PK280,PK290,PK362-PK380,PK496-PK499,PK505-PK510,PK566-PK580, PK618-PK620,PK638-PK640,PK643-PK660,PK667-PK670,PK805-PK818,PK828-PK829,PK831-PK860, PK864-PK870,PK885-PK899,PK975-PK999,PL082-PL099,PL114-PL150,PL152-PL170,PL173-PL199, PL204-PL220,PL222-PL250,PL442-PL450,PL457-PL470,PL472-PL490,PL492-PL499,PL507-PL550, PL563-PL580,PL582-PL599,PL604-PL610,PL612-PL620,PL624-PL630,PL633-PL650,PL746-PL755, PL789-PL792,PM024-PM050,PM091-PM099,PM143-PM170,PM284-PM299,PN003-PN020,PN087-PN099, PY058-PY080,PY167-PY180,PY232-PY240,PY402-PY409,PY412-PY420,PY423-PY440,PY442-PY450, PY613-PY620,PY622-PY630,PY652-PY670,PY673-PY680,PY722-PY730,PY742-PY750)

[D] FOR CUM LINE NUMBERS: 825 THRU 1486 (BOEING REF: P4347-P4399, P4420-P4499,P4501-P4799,P4801-P5499, P8964-P9995)

Corrosion Protective Treatment
Figure 5 (Sheet 3)

BOEING PROPRIETARY - Copyright © - Unpublished Work - See title page for details.

HEAT TREAT VERIFICATION - HARDNESS AND CONDUCTIVITY TESTING

1. Applicability

A. This subject gives the procedures to verify the heat treat condition of metal. This section also gives a description of some of the equipment necessary for this testing and the applicable vendor data.

B. The information in this subject can be found in Boeing Process Specifications BAC5617 and BAC5946.

NOTE: Refer to Boeing Process Specification BAC5602 for heat treatment of aluminum alloys. Refer to Boeing Process Specification BAC5617 for heat treatment of alloy steels. Refer to Boeing Process Specification BAC5619 for heat treatment of corrosion resistant steels.

2. General

A. As an alternative to the procedure that follows, you can refer to NDT Part 6, 51-00-00, Fig. 20 Electrical Conductivity Measurement for Aluminum, or Boeing Process Specification BAC5650 Hardness Testing.

B. The heat treat condition of materials can be identified by running comparative tests with samples of known conditions. Heat treat identification can be made with portable hardness testers (which indent the part being tested) or with eddy current conductivity tests. Both types of tests require access to only one side of the test part. In many cases, hardness tests alone do not always give satisfactory results. For better results, do both hardness tests and conductivity tests (especially when assessing fire-damaged structure).

BOEING PROPRIETARY - Copyright © - Unpublished Work - See title page for details.

2. C. The portable hardness testers that follow, require access to only one side of the part. (See Fig. 1)

(1) New Age Rockmate from New Age Industries, Willow Grove, PA (Detail I). The Rockmate can take readings in various hardness scales for use on both aluminum and steel. The Rockmate is the most accurate of the listed instruments.

(2) The Microdur from Krautkramer Branson, Lewiston, PA (Detail II). The Microdur can take readings in the Rockwell B (aluminum), and C (steel) scales.

(3) New Age MRDI (formerly Ernst Portable Hardness Tester models RAR and RBR), from New Age Industries (Detail III). The MRDI can take readings in the Rockwell A (steel) and B (aluminum) scales. It requires samples of known hardness for calibration.

(4) Barcol Tester from Barber-Coleman Co., Rockford, IL (Detail IV). The Barcol Tester does not give a direct hardness number. It does give a dial reading which must be compared to a dial reading taken on a sample of known hardness. The Barcol is not recommended for use on steel because of its limited dial range for hard materials.

3. Procedure

A. Do the hardness tests using a portable hardness tester as follows:

(1) Remove any protective finishes from an area approximately 1/2 inch in diameter to gain access to the bare metal.

CAUTION: GRINDING MUST NOT BE USED TO REMOVE PLATING MATERIALS. CHROMIUM OR NICKEL PLATING MAY BE PRESENT. IF PLATING RESISTS REMOVAL, REMOVE USING STANDARD METHODS AND PROCEDURES. IF NECESSARY, POSITIVELY IDENTIFY THE PLATING AS DESCRIBED IN 51-10-01. DO NOT CHEMICAL SPOT TEST IN AREAS WHERE PLATING IS REMOVED.

(2) Check calibration of instrument per manufacturers instructions.

NOTE: The ASTM specifications that follow give data for the test blocks that are used as reference standards. These test blocks can also be purchased from the manufacturer of the test equipment.

ASTM E 10 Brinell Hardness of Metallic Materials
ASTM E 18 Rockwell Hardness and Rockwell Superficial Hardness of Metallic Materials

BOEING PROPRIETARY - Copyright © - Unpublished Work - See title page for details.

3. A. (2) (a) For direct readout instruments, check calibration against similar materials of known hardness.

(b) For Barcol instruments, determine the scale acceptance limits on materials of known hardness.

CAUTION: AVOID SIDE THRUST ON POINT OF INDENTER WHEN APPLYING PRESSURE.

(3) Hold the indenter perpendicular to the surface and apply pressure.

(4) Take several readings over the surface of the structure being tested.

(5) Determine from Fig. 2 if the material meets the heat treat requirements of the metal.

B. Eddy current methods may also be used to evaluate material heat treat.

(1) Detailed procedures for the use of conductivity testing to evaluate the heat-treat condition of aluminum are contained in NDT Part 6, 51-00-00, Fig. 20.

(2) Determine from Fig. 2 the conductivity values (percent IACS) for the material being tested (alloy, temper, bare or clad).

C. Use these precautions when you use the portable hardness testers to prevent further damage to existing structures:

(1) Do not use these testers on material which is too thin to prevent distortion of the test piece under the impact of the indenter. Do tests on comparative samples to make sure that the part will not be damaged.

(2) Do not apply the indenter too near the edge of the material. Buckling can occur.

(3) Before you test clad aluminum alloys, remove the clad material from the areas to be tested. The pure aluminum of the clad surface will cause the indicated hardness values to be different from the specified values.

BOEING PROPRIETARY - Copyright © - Unpublished Work - See title page for details.

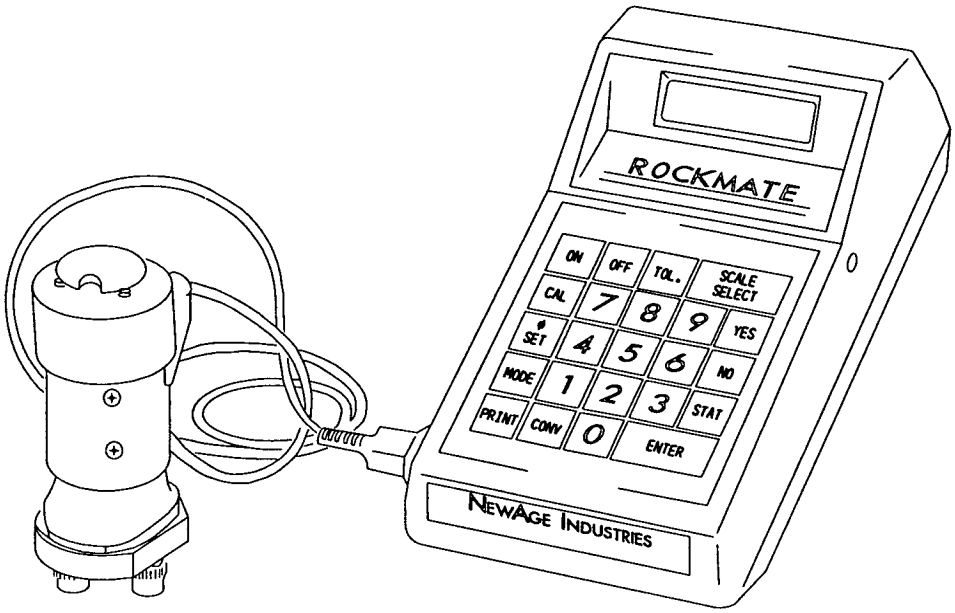

NEW AGE ROCKMATE
DETAIL I

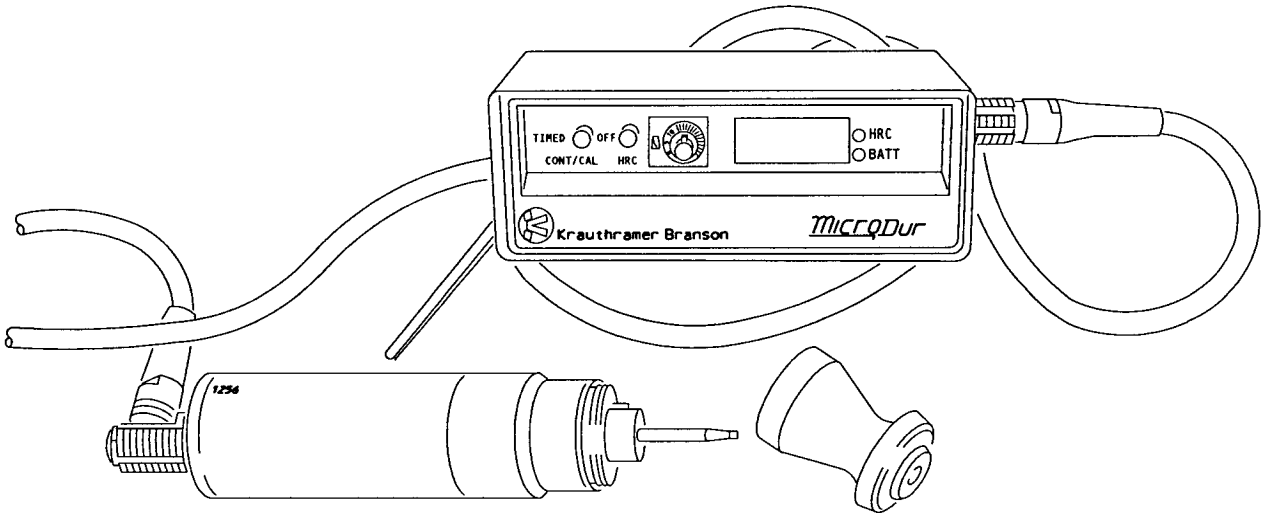

MICRODUR
DETAIL II

Portable Hardness Testers
Figure 1 (Sheet 1)

BOEING PROPRIETARY - Copyright © - Unpublished Work - See title page for details.

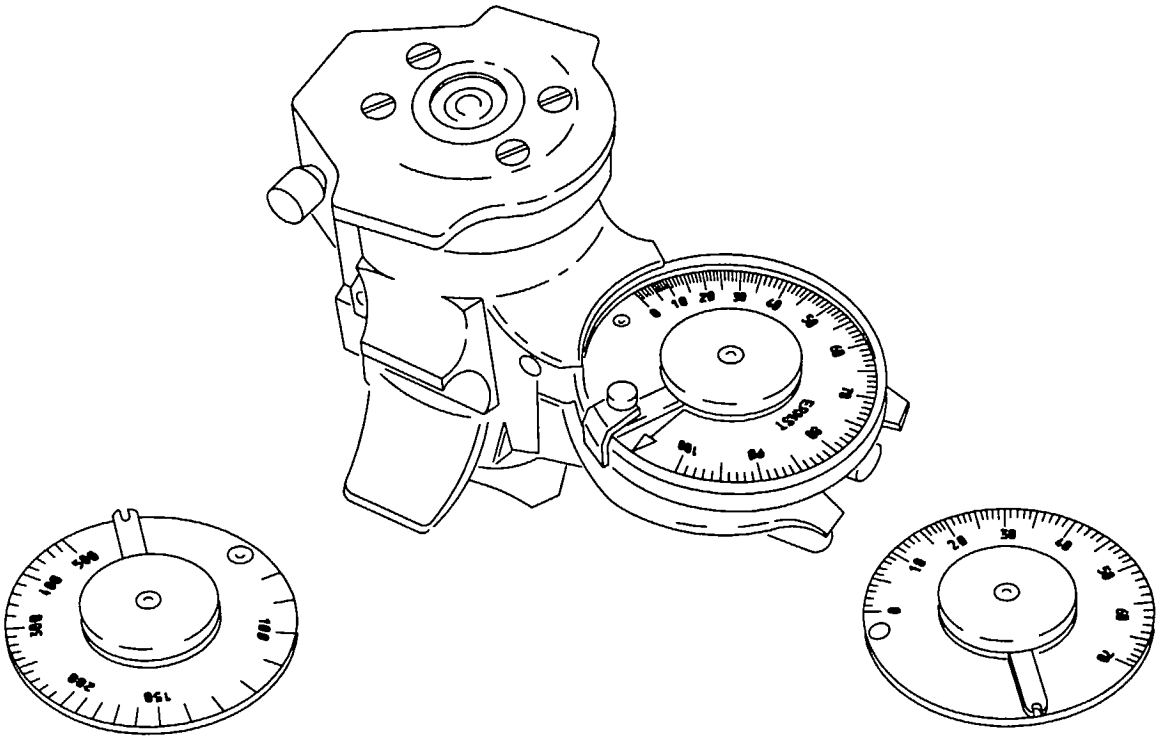

NEW AGE MRD1
DETAIL III

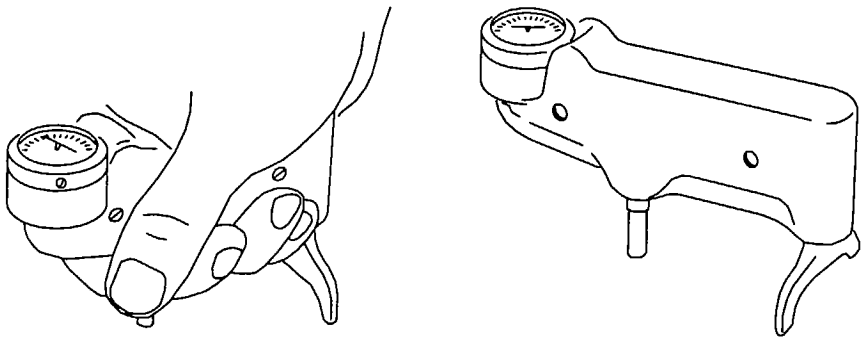

BARCOL PORTABLE HARDNESS TESTER
DETAIL IV

Portable Hardness Testers
Figure 1 (Sheet 2)

BOEING PROPRIETARY - Copyright © - Unpublished Work - See title page for details.

NOTES

- THE SOURCE OF INFORMATION FOR THIS FIGURE CAN BE FOUND IN BOEING PROCESS SPECIFICATION BAC5946
- MECHANICAL HARDNESS TESTING PROCEDURES MUST BE DONE ON A NON-CLAD SURFACE. IF ALL SURFACES OF A PART HAVE AN ALUMINUM CLAD COATING, THEN THE CLAD MUST BE REMOVED FROM THE TEST AREA.

[A] THE VALUES THAT ARE SHOWN ARE FOR FLAT, BARE ALUMINUM ONLY. IF THE PART HAS ONE OR MORE SURFACES WITH AN ALUMINUM CLAD COATING THEN A CLAD CORRECTION FACTOR IS REQUIRED. IF THE SURFACE IS NOT FLAT, A CORRECTION FACTOR IS REQUIRED. REFER TO BSS7351 FOR A SOURCE OF BOEING APPROVED CORRECTION FACTORS. ALTERNATIVE METHODS AND CORRECTION FACTORS ARE ACCEPTABLE FOR CLAD AND CURVED SURFACES IF APPROVED BY BOEING OR YOUR LOCAL REGULATORY AGENCY. REFER TO NDT, PART 6, 51-00-00, FIG. 20 FOR THE DETAILED PROCEDURE ON ELECTRICAL CONDUCTIVITY MEASUREMENTS FOR ALUMINUM. FOR ADDITIONAL INFORMATION ON EDDY CURRENT TESTING OF ALUMINUM ALLOYS REFER TO BOEING PROCESS SPECIFICATIONS BAC5946 AND BSS7351, OR ASK BOEING.

[B] VALID ONLY FOR PARTS WHICH HAVE BEEN SUPERPLASTIC FORMED (SPF) AND HEAT TREATED.

[C] CONDUCTIVITY MAXIMUM FOR 2024 RIVETS IS 33.5 PERCENT IACS.

[D] CONDUCTIVITY VALUES ARE FOR INFORMATION ONLY AND MUST NOT BE USED FOR REJECTION OF AL-LI ALLOYS.

[E] USE THE BRINELL (500KG) SCALE FOR HARDNESS TESTING. REFER TO BAC5650.

[F] UNLESS OTHERWISE SPECIFIED, DO NOT TEST WELDED PARTS IN WELD BEAD OR ADJACENT HEAT-AFFECTED AREA WHEN WELDED IN THE -T4 OR -W CONDITION AND SUBSEQUENTLY AGED TO THE -T6 CONDITION.

[G] IT IS POSSIBLE THAT ADDITIONAL RESTRICTIONS OR QUALIFICATIONS ARE IN BAC5602 OR THE MATERIAL SPEC- IFICATIONS FOR THE OVERAGED TEMPERS (T73, T73XX, T74XX, T76XX) OF THESE ALLOYS. TENSILE YIELD STRENGTH CAN LIMIT ACCEPTANCE OF MATERIALS THAT HAVE CONDUCTIVITY AND HARDNESS WITHIN THE ABOVE RANGES. REFER TO THE APPLICABLE SPECIFICATION.

[H] ELECTRICAL CONDUCTIVITY FOR 7050-T735XX IN THE RANGE OF 40.0 TO 44.0 PERCENT IACS IS PERMITTED FOR THE CONDITIONS THAT FOLLOW:

a. FOR THE 40.0 TO 40.9 RANGE, ELECTRICAL CONDUCTIVITY IS PERMITTED IF THE LONGITUDINAL YIELD STRENGTH IS LESS THAN 69 KSI.

b. FOR THE 41.0 TO 44.0 RANGE, ELECTRICAL CONDUCTIVITY IS PERMITTED IF THE LONGITUDINAL YIELD STRENGTH MEETS THE REQUIREMENTS OF AMS 4341.

[I] TEMPER - T74XX (WAS DESIGNATED 767T736XXX)

[J] ELECTRICAL CONDUCTIVITY FOR 7050-T74XXX IN THE RANGE OF 38.0 TO 44.0 IS PERMITTED UNLESS:

- YOU VERIFY A MATERIAL RESPONSE TO A SOLUTION HEAT TREATMENT AND AGING AS SPECIFIED IN BAC5602.
- WHEN THIS OCCURS, ELECTRICAL CONDUCTIVITY IN THE RANGE OF 38.0 TO 44.0 IS PERMITTED ONLY IF THE CONDITIONS THAT FOLLOW ARE APPLICABLE:

(1) YS (xx.x ksi) - EC (xx.x(IACS)) $\leq$32.0 WHERE E.C. IS ELECTRICAL CONDUCTIVITY YS IS YIELD STRENGTH (LONGITUDINAL FOR EXTRUDED AND FORGED PRODUCTS; LONG TRAVERSE FOR PLATE PRODUCTS).

(2) THE YIELD STRENGTH CANNOT EXCEED 72 KSI.

(3) MECHANICAL PROPERTIES FROM CERTIFICATION RECORDS OF THE LOT CAN BE USED IN THESE EQUATIONS IF NO ADDITIONAL HEAT TREATMENT HAS BEEN DONE SINCE PURCHASE.

NOTE: FOR 7050-T74XX, THE PROCUREMENT SPECIFICATIONS ARE AMS 4050 AND BMS7-323 FOR PLATE; AMS 4342 FOR EXTRUDED BAR, ROD, AND SHAPES, AND BMS7-214 FOR FORGINGS.

Hardness and Conductivity Values of Aluminum Materials
Figure 2 (Sheet 1)

BOEING PROPRIETARY - Copyright © - Unpublished Work - See title page for details.

NOTES (CONTINUED)

[K] ELECTRICAL CONDUCTIVITY FOR 7050-T76XXX IN THE RANGE OF 37.0 TO 44.0 IS PERMITTED UNLESS:

- YOU VERIFY MATERIAL RESPONSE TO A SOLUTION HEAT TREATMENT AND AGING AS SPECIFIED IN BAC5602.
- WHEN THIS OCCURS, ELECTRICAL CONDUCTIVITY IN THE RANGE OF 38.0 TO 40.0 IS ACCEPTABLE ONLY IF THE CONDITIONS THAT FOLLOW ARE APPLICABLE:
  - (1) AMS 4340: LONGITUDINAL YS (xx.x KSI) - EC (xx.x IACS) <39.0
  - (2) AMS 4201: LONG TRAVERSE YS (xx.x KSI) - EC (xx.x IACS) <36.0
  - (3) BAC5602: LONGITUDINAL YS (xx.x KSI) - EC (xx.x IACS) <36.0
  - (4) MECHANICAL PROPERTIES FROM CERTIFICATION RECORDS OF THE LOT CAN BE USED IN THESE EQUATIONS IF NO ADDITIONAL HEAT TREATMENT HAS BEEN DONE SINCE PURCHASE.

[L] THE MINIMUM PERMITTED CONDUCTIVITY READING ON MACHINED SURFACES OF 7075-T7751 MUST BE 34.5 PERCENT IACS.

[M] HARDNESS MUST BE MEASURED ON SURFACES WHICH ARE BETWEEN 1T/4 AND 3T/4 OF THE SOLUTION HEAT TREATED THICKNESS.

[N] TABLE VALUES ARE UNCORRECTED FOR VARIATIONS DUE TO GEOMETRY CONDITIONS WHICH INFLUENCE HARDNESS MEASUREMENTS (FOR EXAMPLE, CURVATURE). CORRECTION FACTORS FOR THESE VARIATIONS ARE APPLIED TO THE ACCEPTANCE LIMITS AND/OR MEASURED VALUES VALUES AS APPLICABLE PRIOR TO ACCEPTANCE OR REJECTION.

[O] SUB-TEMPERS OF THE ALLOYS AND TEMPERS THAT FOLLOW DO NOT SHOW IMPORTANT DIFFERENCES TO PERMIT SEPARATION BY HARDNESS ALONE. FOR EXAMPLE, 2024-T3511 OT 7075-T73511 ARE INSPECTED TO THE VALUES SHOWN FOR 2024-T3 AND 7075-T73, RESPECTIVELY.

Hardness and Conductivity Values of Aluminum Materials
Figure 2 (Sheet 2)

BOEING PROPRIETARY - Copyright © - Unpublished Work - See title page for details.

ALLOY AND TEMPER		CONDUCTIVITY (PERCENT IACS) [A]		ROCKWELL HARDNESS			
		MINIMUM	MAXIMUM	SCALE	THICKNESS RANGE (INCH)	MINIMUM	MAXIMUM
1100	H42	---	---	E 15T	0.060 AND UP 0.026 TO 0.059	18 36.5	48 53.5
2004 [B]	T62	38.0	42.0	B 15T	0.040 AND UP 0.026 TO 0.039	55 78.5	75 85
2014	0	48.5	51.0	E 15T	0.060 AND UP 0.026 TO 0.059	--- ---	60.0 60.5
	T3XX	31.5	35.0	B 15T	0.040 AND UP 0.026 TO 0.039	68 82.5	80 86.5
	T4XXX	31.5	35.0	B 15T	0.040 AND UP 0.026 TO 0.039	68 82.5	80 86.5
	T6XXX	35.0	40.0	B 15T	0.040 AND UP 0.026 TO 0.039	78.5 86	89.5 89.5
2017	0	48.5	51.0	E 15T	0.060 AND UP 0.026 TO 0.059	--- ---	50 54
	T4XXX	31.5	35.0	B 15T	0.040 AND UP 0.026 TO 0.039	68 82.5	80 86.5
2024	0	45.5	49.0	E 15T	0.060 AND UP 0.026 TO 0.059	--- ---	62 61.5
	T3XXX	28.5	32.0	B 15T	0.040 AND UP 0.026 TO 0.039	63 81	83.5 88
	T4X	28.5	32.0 [C]	B 15T	0.040 AND UP 0.026 TO 0.039	63 81	83.5 87
	T6X	36.0	40.0	B 15T	0.040 AND UP 0.026 TO 0.039	72 84	86 88.5
	T8XXX	38.0	42.0	B 15T	0.040 AND UP 0.026 TO 0.039	74 84.5	86 88.5
2094 [D]	T3X	16.0	18.5	B 15T	0.040 AND UP 0.026 TO 0.039	34 69	49 74.5
	T83X	16.0	18.5	B 15T	0.040 AND UP 0.026 TO 0.039	80 86.5	90 90
	T86X	16.0	18.5	B 15T	0.040 AND UP 0.026 TO 0.039	80 86.5	90 90
2124	T8XXX	38.0	42.0	B 15T	0.040 AND UP 0.026 TO 0.039	74 84.5	86 88.5

CONDUCTIVITY AND HARDNESS ACCEPTANCE LIMITS
TABLE I

Hardness and Conductivity Values of Aluminum Materials
Figure 2 (Sheet 3)

BOEING PROPRIETARY - Copyright © - Unpublished Work - See title page for details.

ALLOY AND TEMPER		CONDUCTIVITY (PERCENT IACS) [A]		ROCKWELL HARDNESS			
		MINIMUM	MAXIMUM	SCALE	THICKNESS RANGE (INCH)	MINIMUM	MAXIMUM
2219	0	44.0	49.0	E 15T	0.060 AND UP 0.026 TO 0.059	--- ---	70 66
	T3XXX	26.0	31.0	B 15T	0.040 AND UP 0.026 TO 0.039	64.5 81.5	--- ---
	T37	27.0	31.0	B 15T	0.040 AND UP 0.026 TO 0.039	65.5 82	--- ---
	T4X	28.0	32.0	B 15T	0.040 AND UP 0.026 TO 0.039	61 80.5	--- ---
	T6X	32.0	35.0	B 15T	0.040 AND UP 0.026 TO 0.039	65.5 82	--- ---
	T8XXX	31.0	35.0	B 15T	0.040 AND UP 0.026 TO 0.039	73 84.5	--- ---
	T87	31.0	35.0	B 15T	0.040 AND UP 0.026 TO 0.039	77 85.5	--- ---
2224	T3511	29.5	33.5	B 15T	0.040 AND UP 0.026 TO 0.039	70 83.5	83.5 88
2324	T39	29.0	32.0	B 15T	0.040 AND UP 0.026 TO 0.039	77 85.5	86 88.5
2524 (C188)	T3XXX	28.5	32.0	B 15T	0.040 AND UP 0.026 TO 0.039	63 81	83.5 88
3003	0	44.5	50.5	H	---	---	65
5052	0	34.0	37.0	E 15T	0.060 AND UP 0.026 TO 0.059	--- ---	70 66
	H34	34.0	37.0	E 15T	0.060 AND UP 0.026 TO 0.059	66 64	--- ---
5083	0	---	---	E 15T	0.060 AND UP 0.026 TO 0.059	--- ---	75 69.5
	HXX	---	---	E 15T	0.060 AND UP 0.026 TO 0.059	80 72	--- ---
5154	0	---	---	E 15T	0.060 AND UP 0.026 TO 0.059	--- ---	51 55
	HXX	---	---	E 15T	0.060 AND UP 0.026 TO 0.059	55 57.5	80 72

CONDUCTIVITY AND HARDNESS ACCEPTANCE LIMITS
TABLE I (CONT)

Hardness and Conductivity Values of Aluminum Materials
Figure 2 (Sheet 4)

BOEING PROPRIETARY - Copyright © - Unpublished Work - See title page for details.

ALLOY AND TEMPER		CONDUCTIVITY (PERCENT IACS) [A]		ROCKWELL HARDNESS			
		MINIMUM	MAXIMUM	SCALE	THICKNESS RANGE (INCH)	MINIMUM	MAXIMUM
5456	0	---	---	[E]	---	---	70
	H112	---	---	[E]	---	70	---
	H311	---	---	[E]	---	75	---
	H321	---	---	[E]	---	90	---
	H323	---	---	[E]	---	90	---
	H343	---	---	[E]	---	94	---
6013	T4X	37.0	40.0	B 15T	0.040 AND UP 0.026 TO 0.039	41 74	60 80
	T6X	41.0	46.5	B 15T	0.040 AND UP 0.026 TO 0.039	64 79.5	79 86
6061	0	47.0	56.0	E 15T	0.060 AND UP 0.026 TO 0.059	--- ---	25 40.5
	T4XXX	36.0	45.5	E 15T	0.060 AND UP 0.026 TO 0.059	64 63	--- ---
	T42	36.0	45.5	E 15T	0.060 AND UP 0.026 TO 0.059	60 60.5	--- ---
	T6XXX [F]	40.0	51.0	B 15T	0.060 AND UP 0.026 TO 0.059	47 76	80 86.5
6063	0	57.0	65.0	H	---	---	70
	T1X	48.0	58.0	E 15T	0.060 AND UP 0.026 TO 0.059	37 47.5	--- ---
	T4X	48.0	58.0	E 15T	0.060 AND UP 0.026 TO 0.059	40 49	--- ---
	T5X	50.0	60.0	E 15T	0.060 AND UP 0.026 TO 0.059	44 51	--- ---
	T6X	50.0	60.0	E 15T	0.060 AND UP 0.026 TO 0.059	70 66	--- ---
7049 [G]	0	44.0	50.0	E 15T	0.060 AND UP 0.026 TO 0.059	--- ---	70 66
	T73XXX	40.0	44.0	B 15T	0.040 AND UP 0.026 TO 0.039	82 87	--- ---

CONDUCTIVITY AND HARDNESS ACCEPTANCE LIMITS
TABLE I (CONT)

Hardness and Conductivity Values of Aluminum Materials
Figure 2 (Sheet 5)

BOEING PROPRIETARY - Copyright © - Unpublished Work - See title page for details.

ALLOY AND TEMPER		CONDUCTIVITY (PERCENT IACS) [A]		ROCKWELL HARDNESS			
		MINIMUM	MAXIMUM	SCALE	THICKNESS RANGE (INCH)	MINIMUM	MAXIMUM
7050	0	44.0	50.0	E 15T	0.060 AND UP 0.026 TO 0.059	--- ---	70 66
	T735XX [H]	41.0	44.0	B 15T	0.040 AND UP 0.026 TO 0.039	82 87	92 90.5
	T74XX [I] [J]	40.0	44.0	B 15T	0.040 AND UP 0.026 TO 0.039	82 87	92 90.5
	T76XX [K]	39.0	44.0	B 15T	0.040 AND UP 0.026 TO 0.039	84 88	94 91.5
7055	T7751	35.5 [L]	38.0	B 15T	0.040 AND UP 0.026 TO 0.039	90.5 90	98 92.5
	T77511	35.5	38.0	B 15T	0.040 AND UP 0.026 TO 0.039	91.5 90.5	98 92.5
7075 [G]	0	44.0	47.5	E 15T	0.060 AND UP 0.026 TO 0.059	--- ---	65 63.5
	T6XXX	30.0	35.0	B 15T	0.040 AND UP 0.026 TO 0.039	83.5 88	94 91.5
	T73XX	38.0	42.5	B 15T	0.040 AND UP 0.026 TO 0.039	79.5 86.5	89 89.5
	T73511	38.0	42.5	B B 15T	1.500 AND UP 0.040 TO 1.499 0.026 TO 0.039	78.5 79.5 86.5	89 89 89.5
	T76XXX	38.0	42.0	B 15T	0.040 AND UP 0.026 TO 0.039	82 87	91 90.5
7079	T6XX	30.0	33.5	E 15T	0.040 AND UP 0.026 TO 0.039	84 88	94 91.5
7150	T651	34.0	39.5	E 15T	0.040 AND UP 0.026 TO 0.039	90 90	98 92.5
	T651X T651XP	32.0	37.5	E 15T	0.040 AND UP 0.026 TO 0.039	90 90	98 92.5
	T77511	35.5	39.0	B B B B 15T	0.750 TO 2.500 0.500 TO 0.749 0.250 TO 0.499 0.040 TO 0.249 0.026 TO 0.039	92 91 90.5 90 90.5	98 98 98 98 92.5

CONDUCTIVITY AND HARDNESS ACCEPTANCE LIMITS
TABLE I (CONT)

Hardness and Conductivity Values of Aluminum Materials
Figure 2 (Sheet 6)

BOEING PROPRIETARY - Copyright © - Unpublished Work - See title page for details.

ALLOY AND TEMPER		CONDUCTIVITY (PERCENT IACS) [A]		ROCKWELL HARDNESS			
		MINIMUM	MAXIMUM	SCALE	THICKNESS RANGE (INCH)	MINIMUM	MAXIMUM
7175 [G]	0	44.0	47.5	E 15T	0.060 AND UP 0.026 TO 0.059	--- ---	65 63.5
	T6x	30.0	34.0	B 15T	0.040 AND UP 0.026 TO 0.039	85 88.5	94 91.5
	T74XXX	38.0	42.5	B 15T	0.040 AND UP 0.026 TO 0.039	82 87	93 91
7178	0	43.0	47.0	E 15T	0.060 AND UP 0.026 TO 0.059	--- ---	65 63.5
	T6XXX	29.5	33.0	B 15T	0.040 AND UP 0.026 TO 0.039	87.5 89	94 91.5
	T76XXX	38.0	42.0	B 15T	0.040 AND UP 0.026 TO 0.039	84 88	--- ---
7475 [B]	T6X	30.0	35.0	B 15T	0.040 AND UP 0.026 TO 0.039	83.5 88	94 91.5
	T76X	37.0	42.0	B 15T	0.040 AND UP 0.026 TO 0.039	82 87	91 90.5
8090 [D]	T3X	14.5	16.5	B 15T	0.040 AND UP 0.026 TO 0.039	30 70.5	50 77

CONDUCTIVITY AND HARDNESS ACCEPTANCE LIMITS
TABLE I (CONT)

Hardness and Conductivity Values of Aluminum Materials
Figure 2 (Sheet 7)

BOEING PROPRIETARY - Copyright © - Unpublished Work - See title page for details.

ALLOY, TEMPER PRODUCT FORM	SOLUTION HEAT TREATED THICKNESS (INCHES)	ROCKWELL HARDNESS [M] [N]	
		MINIMUM	MAXIMUM
7075-T73 PLATE, FORGINGS	0 TO 3.000	79.5	89
	3.001 TO 4.000	76.5	89
	4.001 TO 5.000	75	89
	5.001 AND UP	74	89
7075-T7351 PLATE	0.250 TO 2.000	79.5	89
	2.001 TO 2.500	75.5	89
	2.501 TO 3.500	74	89
	3.501 AND UP	73	89
7075-T73511 EXTRUSION	3.000 AND UP, AREA LESS THAN 20 SQUARE INCHES	77.5	89
	3.000 AND UP, AREA GREATER THAN 20 SQUARE INCHES	75.5	89
7075-T7352 FORGINGS	0 TO 3.000	79.5	89
	3.001 TO 4.000	75	89
	4.001 TO 5.000	74	89
	5.001 AND UP	73	89
7175-T74 FORGINGS	0 TO 3.000	82	93
	3.001 TO 4.000	80.5	93
	4.001 TO 5.000	78.5	93
	5.001 AND UP	77	93
7175-T7452 FORGINGS	0 TO 3.000	82	93
	3.001 TO 4.000	78.5	93
	4.001 TO 5.000	76	93
	5.001 AND UP	74.5	93

CENTERLINE HARDNESS ACCEPTANCE LIMITS FOR MACHINED WROUGHT ALUMINUM ALLOYS
TABLE II

Hardness and Conductivity Values of Aluminum Materials
Figure 2 (Sheet 8)

BOEING PROPRIETARY - Copyright © - Unpublished Work - See title page for details.

ALLOY, TEMPER AND THICKNESS [O]	ROCKWELL HARDNESS THROUGH CLAD [N]		
	SCALE	MINIMUM	MAXIMUM
2024-0			
-T3XXX			
0.040 TO 0.079	B	58	83.5
0.080 TO 0.125	B	55	83.5
-T4X			
0.026 TO 0.032	15T	81	87
0.033 TO 0.039	15T	79.5	87
0.040 TO 0.079	B	57	83.5
0.080 TO 0.125	B	54	83.5
-T6X			
0.026 TO 0.032	15T	84	88.5
0.033 TO 0.039	15T	82.5	88.5
0.040 TO 0.079	B	70	86
0.080 TO 0.125	B	64	86
-T8XXX			
0.026 TO 0.032	15T	84	88.5
0.033 TO 0.039	15T	83	88.5
0.040 TO 0.079	B	71	86
0.080 TO 0.125	B	68	86
2219-T62			
0.026 TO 0.032	15T	80	—
0.033 TO 0.039	15T	78.5	—
0.040 TO 0.079	B	53	—
0.080 TO 0.125	B	51	—
2524-T3XX (C188)			
0.026 TO 0.079	B	58	83.5
0.080 TO 0.125	B	55	83.5
7075-0 [G]			
-T6XXX			
0.026 TO 0.032	15T	88	91.5
0.033 TO 0.039	15T	86.5	91.5
0.040 TO 0.079	B	79	94
0.080 TO 0.125	B	75	94
-T73XXX			
0.026 TO 0.032	15T	86.5	89.5
0.033 TO 0.039	15T	85	89.5
0.040 TO 0.079	B	77	89
0.080 TO 0.125	B	74	89

HARDNESS ACCEPTANCE LIMITS FOR CLAD WROUGHT ALUMINUM ALLOYS
TABLE III

Hardness and Conductivity Values of Aluminum Materials
Figure 2 (Sheet 9)

BOEING PROPRIETARY - Copyright © - Unpublished Work - See title page for details.

NOTES

- THE SOURCE OF INFORMATION FOR THIS FIGURE CAN BE FOUND IN BOEING PROCESS SPECIFICATION BAC5617

TENSILE STRENGTH KSI	ROCKWELL C (150 KG)	ROCKWELL A (60 KG)	SUPERFICIAL ROCKWELL 45N (45 KG)	SUPERFICIAL ROCKWELL 30N (30 KG)	SUPERFICIAL ROCKWELL 15N (15 KG)	VICKERS 136 DEG DIAMOND PYRAMID 10 KG	KNOOP DIAMOND 500 GRAMS	BRINELL 10MM BALL 3000 KG TUNGSTEN CARBIDE BALL	BRINELL 10MM BALL 3000 KG STEEL BALL
	72	88	79.5	87	94.5	1245	1024		
	71	87	78.5	86.5	94	1160	988		
	70	86.5	77.5	86	94	1076	972		
	69	86	76.5	85	93.5	1004	946		
	68	85.5	75.5	84.5	93	940	920		
	67	85	74	83.5	93	900	895		
	66	84.5	73	83	92.5	865	870		
	65	84	72	82	92	832	846		
	64	83.5	71	81	92	800	822		
	63	83	70	80	91.5	772	799		
	62	82.5	69	79	91	746	776		
	61	82	67.5	78.5	90.5	720	754		
	60	81	66.5	77.5	90	697	732		
	59	80.5	65.5	76.5	89.5	674	710		
	58	80	64	75.5	89.5	653	690	615	
	57	79.5	63	75	89	633	670	595	
	56	79	62	74	88.5	613	650	577	
301	55	78.5	61	73	88	595	630	560	
292	54	78	59.5	72	87.5	577	612	543	
283	53	77.5	58.5	71	87	560	594	525	
273	52	77	57.5	70.5	86.5	544	576	512	
264	51	76.5	56	69.5	86	528	558	496	
255	50	76	55	68.5	85.5	513	542	481	
246	49	75	54	67.5	85	498	526	469	
238	48	74.5	52.5	66.5	84.5	484	510	455	
229	47	74	51.5	66	84	471	495	442	442
221	46	73.5	50	65	83.5	458	480	432	432
215	45	73	49	64	83	446	466	421	421
208	44	72.5	48	63	82.5	434	452	409	409
201	43	72	46.5	62	82	423	438	400	400
194	42	71.5	45.5	61.5	81.5	412	426	390	390

CONVERSION OF HARDNESS TO TENSILE STRENGTH
TABLE I

Hardness Values of Steel Materials
Figure 3 (Sheet 1)

L89316

BOEING PROPRIETARY - Copyright © - Unpublished Work - See title page for details.

TENSILE STRENGTH KSI	ROCKWELL C (150 KG)	ROCKWELL A (60 KG)	SUPERFICIAL ROCKWELL 45N (45 KG)	SUPERFICIAL ROCKWELL 30N (30 KG)	SUPERFICIAL ROCKWELL 15N (15 KG)	VICKERS 136 DEG DIAMOND PYRAMID 10 KG	KNOOP DIAMOND 500 GRAMS	BRINELL 10MM BALL 3000 KG TUNGSTEN CARBIDE BALL	BRINELL 10MM BALL 3000 KG STEEL BALL
188	41	71	44.5	60.5	81	402	414	381	381
182	40	70.5	43	59.5	80.5	392	402	371	371
177	39	70	42	58.5	80	382	391	362	362
171	38	69.5	41	57.5	79.5	372	380	353	353
166	37	69	39.5	56.5	79	363	370	344	344
161	36	68.5	38.5	56	78.5	354	360	336	336
156	35	68	37	55	78	345	351	327	327
152	34	67.5	36	54	77	336	342	319	319
149	33	67	35	53	76.5	327	334	311	311
146	32	66.5	33.5	52	76	318	326	301	301
141	31	66	32.5	51.5	75.5	310	318	294	294
138	30	65.5	31.5	50.5	75	302	311	286	286
135	29	65	30	49.5	74.5	294	304	279	279
131	28	64.5	29	48.5	74	286	297	271	271
128	27	64	28	47.5	73.5	279	290	264	264
125	26	63.5	26.5	47	72.5	272	284	258	258
123	25	63	25.5	46	72	266	278	253	253
119	24	62.5	24	45	71.5	260	272	247	247
117	23	62	23	44	71	254	266	243	243
115	22	61.5	22	43	70.5	248	261	237	237
112	21	61	20.5	42.5	70	243	256	231	231
110	20	60.5	19.5	41.5	69.5	238	251	226	226

CONVERSION OF HARDNESS TO TENSILE STRENGTH
TABLE I (CONT)

Hardness Values of Steel Materials
Figure 3 (Sheet 2)

BOEING PROPRIETARY - Copyright © - Unpublished Work - See title page for details.

TENSILE STRENGTH KSI	ROCKWELL A (60 KG)	ROCKWELL G (150 KG)	ROCKWELL B (150 KG)	ROCKWELL F (60 KG)	VICKERS 136 DEG DIAMOND PYRAMID 10 KG	KNOOP DIAMOND 500 GRAMS	BRINELL 10MM BALL 3000 KG TUNGSTEN CARBIDE BALL	BRINELL 10MM BALL 3000 KG STEEL BALL
109	60	79	98		228	241	226	226
104	59.5	77.5	97		222	236	222	222
102	58.5	76	96		216	231	216	216
100	58	74	95		210	226	210	210
98	57.5	72.5	94		205	221	205	205
94	57	71	93		200	216	200	200
92	56.5	69	92		195	211	195	195
90	56	67.5	91		190	206	190	190
89	55.5	66	90		185	201	185	185
88	55	64	89		180	196	180	180
86	54	62.5	88		176	192	176	176
84	53.5	61	87		172	188	172	172
82	52.5	57.5	85		165	180	165	165
81	52	56	84		162	176	162	162
80	51	54	83		159	173	159	159
77	50.5	52.5	82		156	170	156	156
73	50	51	81		153	167	153	153
70	49	47.5	79		147	161	147	147
68	48	44	77		141	155	141	141
67	47	42.5	76		139	152	139	139
65	46	39	74	99	135	147	135	135
63	45	36	72	98	130	143	130	130
62	44	34.5	71	97.5	127	141	127	127
59	43	29.5	68	95.5	121	135	121	121
57	42	26.5	66	94.5	117	131	117	117
54	41.5	23.5	64	93.5	114	127	114	114

CONVERSION OF HARDNESS TO TENSILE STRENGTH
TABLE II

Hardness Values of Steel Materials
Figure 3 (Sheet 3)

BOEING PROPRIETARY - Copyright © - Unpublished Work - See title page for details.

1. Fire Damage Evaluation

   A. Examine any portion of an airplane which has been exposed to excessive heat to determine whether such overheating has weakened the structure by using the eddy-current method as outlined in the Nondestructive Test Manual, D6-37239.

   B. Repair or replace fire damaged areas and parts which are shown to be unacceptable by the method in par. A. above.

1. Mercury Spillage Corrective Action

A. It is assumed that any significant quantity of mercury on board an airplane is properly contained, packaged, and labeled for loading in a cargo compartment.

B. The spillage of mercury or a mercury compound within an airplane requires immediate action for its isolation and recovery to prevent possible corrosion damage to and possible embrittlement of aluminum alloy structural components. Refer to Chapter 5, Maintenance Manual - Mercury Spillage - Conditional Inspection, for procedures to be taken in case of mercury spillage.

C. Mercury, by the amalgamation process, can penetrate any break in the finish, paint, or sealing coating of a metal structural element. An oxide coating on a dry metallic surface will tend to inhibit an immediate action while a bright, polished, shining or scratched surface will hasten the process. Moisture will also promote the amalgamation process. Soils, greases, or other inert contaminants present on the metal surfaces will prevent the start of the action. The corrosion and embrittlement which results from an initial penetration can be extremely rapid in structural members under load. Once it has begun, there is no known method of stopping it. Complete destruction of the load carrying capacity of the metal will result.

D. Damage to an aluminum alloy structural component by mercury appears externally as a grayish, powdery dust or fuzzy coating. Such external evidence may be an indication of damage beyond an allowable amount by embrittlement. The extent of such damage should be determined by an X-ray examination. Refer to Boeing Document D6-37239 for procedures generally adaptable to mercury spillage and corrosion, or for military airplanes as detailed in T.O. 1T-43A-36.

E. Damage which has been determined to be embrittlement by X-ray examination as in par. D. above is not allowable. Refer to 51-10-1 for definition of allowable damage.

F. Refer to Chapter 53 for repairs to fuselage structure which has been damaged as in par. E. above.

CORROSION REMOVAL, GENERAL REPAIRS AND SURFACE FINISHING REQUIREMENTS

1. General

A. When active corrosion is visually apparent, a positive inspection and rework program is required to prevent any further deterioration of the structure. The following methods of assessing corrosion damage and procedures for rework of corroded areas should be used during cleanup programs. In general, any rework involves the cleaning and stripping of all finish from the corroded area, the removal of corrosion products, and the restoration of surface protective films. All cleanup should be restricted to the allowable damage rework limits of the applicable structure; but, should these limits be exceeded during rework, the affected part should be repaired or replaced. In cases of doubt, the Boeing Company should be contacted for rework limits of specific structural components when damage exceeds the allowable limits.

2. Safety Procedures

A. General safety precautions, outlined in the following paragraphs, contain rules for handling materials with hazardous physical properties and emergency procedures for the immediate treatment of personnel who have inadvertently come into contact with one of the harmful materials. Materials having hazardous physical properties are referenced to the pertinent safety precautions and emergency safety procedures. All personnel responsible for using or handling hazardous materials should be thoroughly familiar with information contained in the following paragraphs.

B. General Safety Precautions

(1) When required to use or handle any of the solvents, special cleaners, paint strippers (strong alkalies and acids), etchants (corrosion removers containing acids), or surface activation material (alodine 1200S), observe the following safety precautions:

(a) Avoid prolonged breathing of solvents or acid vapors. Solvents and acids must not be used in confined spaces without adequate ventilation or approved respiratory protection.

(b) Never add water to acid. Always add acid to water.

(c) Do not mix chemicals except as prescribed by procedure.

(d) Clean water for emergency use must be available in the immediate work area before starting work.

BOEING PROPRIETARY - Copyright © - Unpublished Work - See title page for details.

(e) Avoid prolonged or repeated contact of solvents, cleaners, etchants (acid), or conversion coating material (alodine solution) with skin. Rubber or plastic gloves should be worn when using solvents, cleaners, paint strippers, etchants, or conversion coating materials. Goggles or plastic face shields and suitable protective clothing must be worn when cleaning, stripping, etching, or conversion coating overhead surfaces.

(f) When mixing alkalies with water or other substance, use containers which are made to withstand heat generated by this process.

(g) Wash any paint stripper, etchant, or conversion coating material immediately from body skin or clothing.

(h) Materials splashed in the eyes must be promptly flushed out with water and medical aid obtained for the injured person.

(i) Do not eat or keep food in areas where it may absorb poisons. Always wash hands before eating or smoking.

(j) All equipment must be cleaned after work has been completed.

(k) Implement all company safety precautions.

C. Emergency Safety Procedures

WARNING: PERSONNEL MUST BE THOROUGHLY FAMILIAR WITH THE FOLLOWING EMERGENCY SAFETY PROCEDURES PRIOR TO USING ANY MATERIALS WHICH ARE REFERENCED TO AN EMERGENCY SAFETY PROCEDURE PARAGRAPH.

(1) If exposed to physical contact with any of the following materials:

Methyl alcohol	Xylene
Methyl ethyl ketone	Petroleum naphthas
Methyl isobutyl ketone	Chromates
Toluene	Dichromates
Trichloroethylene	Acetates
Epoxy resin	Cyclohexanone
Methylene chloride	Cellosolve
Brush alodine	Carbon Tetrachloride

Treat as follows:

(a) If splashed into eyes, do not rub.

(b) Flush eyes immediately with water for at least 15 minutes. Lift upper and lower eyelids frequently to ensure complete washing.

(c) If splashed on clothing or large areas of body, immediately remove contaminated clothing and wash body with plenty of soap and water. Wash clothing before rewearing.

(d) If splashed onto an easily accessible part of the body, immediately wash with soap and water.

(e) If suffering headache or other obvious symptom resulting from overexposure, move to fresh air immediately.

(f) If vapors are inhaled and breathing has slowed down or stopped, remove person from exposure and start artificial respiration at once. Call ambulance and continue this treatment until ambulance arrives.

(2) If exposed to physical contact with any of the following materials:

Hydrofluoric acid	Phenol
Nitric acid	Cresols
Phosphoric acid	Tricresyl phosphate

Treat as follows:

WARNING: IT CANNOT BE OVEREMPHASIZED THAT SPEED IS MOST IMPORTANT IN SKIN, EYE AND INHALATION TREATMENT.

(a) Eyes: If splashed into eyes, do not rub, flush immediately with water for at least 15 minutes. Lift upper and lower eyelids frequently to ensure complete washing. Call Medical immediately.

(b) Exposed Skin: If splashed on skin wash affected area with large amounts of water for at least 15 minutes. Report to Medical.

(c) Clothing: If splashed on clothing or large area of body, remove contaminated clothing and wash body under a shower for at least 15 minutes. Wash clothing before reuse. Report to Medical.

(d) Inhalation: If vapors are inhaled, remove worker to fresh air and apply artificial respiration if necessary. Call Medical.

NOTE: Tricresyl phosphate is not considered an inhalation hazard.

(e) Internally: Proceed as follows:

1) Worker unconscious: Do not give any liquid. Begin artifical respiration and have someone call Medical immediately.

2) Worker conscious:

a) Phenols and Cresols: Do not attempt to induce vomiting. Encourage him to wash out his mouth with copious amounts of water. Call Medical immediately.

b) Phosphoric Acid: Do not induce vomiting. Call Medical immediately.

c) Hydrofluoric Acid: Drink water to dilute acid, then cause vomiting by placing finger in the back of throat. Repeat. Wash out mouth repeatedly. Call Medical immediately.

d) Nitric Acid: Do not induce vomiting. Drink copious amounts of water, if possible. Call Medical immediately.

e) Tricresyl Phosphate: Cause vomiting by placing finger in the back of the worker's throat. If necessary, have him drink water, then use finger to induce vomiting. Call Medical immediately.

BOEING PROPRIETARY - Copyright © - Unpublished Work - See title page for details.

3. Corrosion Damage and Rework Limits

A. Corrosion evaluation will be required after initial inspection and cleaning to determine nature and extent of repair or rework. It is difficult to establish a distinct and specific dividing line between the various conditions, consequently, the first requirement for evaluation is good and sound maintenance judgement. Evaluate corrosion as follows:

(1) Light Corrosion - Characterized by discoloration or pitting to a depth of approximately 0.001 inch maximum. This type of damage will normally be removed by light hand sanding or a minimum of chemical treatment.

(2) Moderate Corrosion - Appears similar to light corrosion except there may be some blisters or evidence of scaling and flaking. Pitting depths may be as deep as 0.010 inch. This type of damage will normally be removed by extensive hand sanding or mechanical sanding.

(3) Severe Corrosion - General appearance may be similar to moderate corrosion with severe blistering exfoliation and scaling or flaking. Pitting depths will be deeper than 0.010 inch. This type of damage will normally be removed by extensive mechanical sanding or grinding.

B. Determining Degree of Corrosion Damage

(1) Determine degree of corrosion damage, as classified in par. 3.A. (light, moderate or severe) with a depth dial gage if accessibility permits. Before measurements are made, visually determine if corrosion is in an area which has previously been reworked. If corrosion is in the recess of a faired or blended area, measure damage to include the material which has previously been removed. The following method outlines the process for taking measurements with the depth gage.

(a) Remove loose corrosion products if present.

NOTE: The base of the depth gage must be flat against the undamaged surface on each side of the corrosion. When taking measurements on concave or convex surfaces, place the base perpendicular to the radius of the surface as shown in Fig. 1.

(b) Position depth gage as illustrated in figure 1 and determine the measurement reading.

(c) Take several additional depth readings.

(d) Select deepest reading as being depth of the corrosion damage.

C. Determining Rework Limits

(1) The maximum allowable amount of material removed from any damaged surface shall be determined from the criteria contained in the applicable allowable damage limits of the various chapters. If no criteria is given, contact the Stress Unit of The Boeing Company for cleanup limits.

D. Determining Material Thickness Reduction after Corrosion Cleanup

BOEING PROPRIETARY - Copyright © - Unpublished Work - See title page for details.

(1) The amount of material which may be removed from a part or panel during corrosion cleanup is given in Allowable Damage Limits charts in various sections of this manual. To ensure that the allowable limits are not exceeded, an accurate measurement must be made of the material removed or material thickness remaining in the reworked area after fairing. Measurement of panel thickness after rework can be made using a Vidigage (or similar) ultrasonic tester. Actual panel thickness remaining can be read from a scale on the Vidigage. Measurement of the depth of blended pits (material removed) can be made using a depth dial gage. (See Fig. 1.) If the area is inaccessible, clay impressions, or any other means which will give accurate results, may be used to determine material removal. In the event that material removal limits have been exceeded, the area or part must be repaired or replaced. If replacement or repair criteria is not contained in the Structural Repair Manual, contact the Service Department of The Boeing Company.

4. Corrosion Removal Techniques

A. Several standard methods are available for corrosion removal. The methods normally used to remove corrosion are chemical treatments, hand sanding with abrasive paper or metal wool, and mechanical sanding or buffing with abrasive mats, grinding wheels, or rubber mats. However, the method used depends upon the metal and the degree of corrosion. The removal method to use on each metal for each particular degree of corrosion is outlined in par. 7 through 13.

B. Special Techniques

CAUTION: WHEN YOU DO ABRASIVE BLAST PROCEDURES IN AREAS WHERE LUBRICATION FLUIDS OR GREASE ARE APPLIED, USE CARE TO PREVENT CONTAMINATION OF THE LUBRICANT WITH THE BLAST RESIDUE. THIS CONTAMINATION CAN AFFECT THE LUBRICATION PROPERTIES AND THE RESULT CAN BE INCREASED WEAR OF THE LUBRICATED PARTS.

(1) In special instances, a particular or specific method may be required to remove corrosion. Depending upon rework criteria, corrosion in a hole may be removed by enlarging the hole. Abrasive blasting may be required for removing corrosion from steel fasteners, side skins, or irregularly shaped parts or surfaces. Whenever such special cases occur, the method for corrosion removal will be specified with the rework criteria in the applicable chapters.

WARNING: AVOID EXCESSIVE INHALATION OF ABRASIVE DUST. PROVIDE VENTILATION AS REQUIRED.

CAUTION: MAGNESIUM CREATES A FIRE HAZARD WHEN ABRASIVE BLASTED. ADEQUATE PRECAUTIONS MUST BE TAKEN WHEN ABRASIVE BLASTING THIS METAL.

DRY ABRASIVE BLASTING OF TITANIUM ALLOYS AND HIGH TENSILE STRENGTH STEEL CREATES SPARKING. CARE MUST BE TAKEN TO ASSURE THAT THERE IS NO HAZARDOUS CONCENTRATION OF INFLAMMABLE VAPORS PRESENT.

STATIC GROUND THE DRY ABRASIVE BLASTER AND THE MATERIAL TO BE BLASTED.

BOEING PROPRIETARY - Copyright © - Unpublished Work - See title page for details.

NOTE: An alternative procedure recommended to remove filiform corrosion from clad aluminum skins is glass bead blasting. Do not use glass bead blasting to remove other types of aluminum corrosion. Refer to SOPM 20-40-00 of the Corrosion Prevention Manual, D6-41910.

C. Fairing or Blending Reworked Areas

(1) All depressions resulting from corrosion rework must be faired or blended with the surrounding surface. Fairing can be accomplished as follows:

(a) Remove rough edges and all corrosion from damaged area per par. 7 through 13.

CAUTION: SELECT THE PROPER ABRASIVE FOR FAIRING OPERATIONS FROM FIG. 2.

NOTE: All dish-outs are to be ellitically shaped with the major axis in the longitudinal direction.

(b) Rework depressions by forming smoothly blended dish-out (Fig. 3). Select appropriate abrasive paper from Fig. 2. In areas having closely spaced multiple pits, intervening material should be removed to minimize surface irregularity or waveiness (Fig. 4).

(c) Where sufficient clearance does not exist to provide an elliptical configuration as specified in Fig. 3 and 4, the corroded area should be blended as nearly as possible to these dimensions and the surrounding area faired gradually with no sharp or abrupt changes (Fig. 5).

(d) Remove all surface blemishes. Select proper abrasive to obtain desired surface finish.

5. Identification of Metals

A. A serious problem encountered in corrosion control is the identification of the metal on which corrosion occurs. The importance of this identification arises from the fact that all metals possess certain chemical characteristics that are common only to themselves; and which vary greatly from metal to metal, and from alloy to alloy of the same metal. Since these characteristics are common to all metals and their alloys, chemical cleaning solutions and chemical protective films will react differently with various metals; and in some cases, produce adverse reactions which can severely weaken or destroy the structural capabilities of the metal. Aluminum, steel, and magnesium sheet and

BOEING PROPRIETARY - Copyright © - Unpublished Work - See title page for details.

plate are stenciled on the back for identification. When these markings are not distinguishable or the metal is not identified in the applicable section, or when a plating material needs to be identified, positive identification can be made by chemical and/or hardness testing.

WARNING: PERSONNEL MUST BECOME THOROUGHLY FAMILIAR WITH THE SAFETY PRECAUTIONS AND EMERGENCY SAFETY PROCEDURES, PARAGRAPHS 2.B. AND 2.C. RESPECTIVELY, PRIOR TO PERFORMING ANY CHEMICAL TESTING.

CAUTION: CHEMICAL SPOT TESTING SHOULD BE USED ONLY WHEN ALL OTHER MEANS OF IDENTIFICATION HAVE BEEN EXHAUSTED.

FASTENERS MUST NOT BE IDENTIFIED BY CHEMICAL SPOT TESTS.

B. Chemical Testing

(1) The chemical identification of the various types of metals used in aircraft construction should be accomplished. Before any tests are conducted, the preliminary surface preparation and primary classification of the metal should be accomplished by the following procedure:

(a) On the surface to be tested, choose an area where there is no corrosion and remove paint (if present) from a 1-inch square. Paint may be stripped with a cloth soaked in paint remover or any equivalent material.

CAUTION: ADEQUATE PRECAUTIONS MUST BE TAKEN TO PREVENT PAINT REMOVER FROM CONTACTING GLASS CLOTH PARTS. REFER TO 51-40-6.

(b) Clean area of surface to be tested.

(c) Tentatively identify the exposed metal surface by visually comparing it with samples of previously identified materials.

(d) Identify the metal as ferrous or nonferrous by placing a magnet on the exposed surface.

1) Magnetic attraction classifies the base metal as a ferrous magnetic material (iron or steel).

2) The absence of magnetic attraction classifies the base metal as either an austenitic steel or a nonferrous metal (aluminum, magnesium, etc.).

(e) Hardness test magnetic metals as detailed in paragraph 6 prior to chemical spot testing. If the metal is nonmagnetic, proceed with paragraph 5.D. following.

C. Chemical Spot Analysis of Magnetic Metals

(1) The magnetic metals usually employed in aircraft construction are ferrous alloys (low alloy steel and chromium-nickel-iron alloys sometimes called stainless steels). These magnetic alloys, when plated, are generally plated with either chromium, nickel, zinc, cadmium, silver, or with a combination of these platings. If a magnetic alloy has been plated with cadmium, zinc, or chromium, it will exert magnetic attraction. Nickel plating will show slight magnetic attraction even if the substrate or base metal is not magnetic. If positive identification of the metal plating is necessary, the identification should be made after accomplishing a hardness test as detailed in 51-10-3.

CAUTION: DO NOT PERFORM CHEMICAL SPOT TEST ON STEELS HEAT TREATED TO 220,000 PSI AND ABOVE.

(a) Place a drop of 10% hydrochloric acid (Hl) on the prepared metal surface. Ensure that surface is dry before applying acid.

1) A rapid reaction producing a dark deposit indicates that the metal is zinc.

2) A slow or no reaction indicates that the metal may be cadmium, chromium, nickel, or steel

WARNING: THE ADDITION OF SODIUM SULFIDE (Na2S) TO ACID PRODUCES A POISONOUS GAS. ADEQUATE VENTILATION MUST BE PROVIDED WHEN THESE TESTS ARE BEING PERFORMED. DO NOT ALLOW LARGE QUANTITIES OF SODIUM SULFIDE (Na2S) AND ACID TO BE MIXED.

(b) After 1 minute, add a drop of sodium sulfide (Na2S) to the drop of hydrochloric acid (HCl).

1) A white precipitate identifies the metal as zinc.

2) A yellow ring formed around a white precipitate identifies the metal as cadmium.

3) A black ring formed around a white precipitate identifies the metal as iron or steel.

4) A black precipitate indicates that the metal is chromium or nickel

(c) Confirm the cadmium, zinc, iron, or steel test by placing a drop of 20% nitric acid (HNO_3) on a fresh spot. After 1 minute, add a drop of sodium sulfide (Na_2S) to the drop of nitric acid (HNO_3).

1) A white precipitate identifies the metal as zinc.

2) A yellow precipitate identifies the metal as cadmium.

3) A black spot identifies the metal as iron or steel.

(d) Confirm the chromium test by placing a drop of 10% hydrochloric acid on a fresh spot. Add a drop of concentrated sulfuric acid (H_2SO_4) to the drop of hydrochloric acid.

1) A color change to green after 1 or 2 minutes identifies the metal as chromium.

(e) Confirm the nickel test by placing a drop of dimethylgloxime solution on a fresh spot. Add a drop of ammonium hydroxide (NH_4OH) to the drop of dimethylgloxime solution.

1) A pink to red precipitate identifies the metal as nickel.

(f) Clean and refinish as detailed in paragraph 5.E.

D. Chemical Spot Analysis of Nonmegnetic Metals

(1) The most common nonmagnetic metals used in aircraft construction are aluminum, magnesium, and austenitic steels (generally used as 18-8 stainless steel). The positive identification of these nonmagnetic metals is accomplished by the following procedure:

(a) Place a drop of 10% hydrochloric acid (HCl) on the prepared metal surface and allow to stand for 1 minute. Ensure that surface is dry before applying acid.

<u>NOTE</u>: Zinc deposits on nonmegnetic metals will react with 10% hydrochloric acid but will not produce a black spot.

1) A rapid or violent reaction that produces a black spot indicates that the metal is magnesium.

2) A slow reaction indicates that the metal is aluminum.

3) No reaction indicates that the metal is an austenitic steel or a nonmagnetic plating material.

(b) If a reaction that did not produce a black spot is noted in step (a), determine if zinc is present as detailed in paragraphs 5.C.(a) through 5.C.(c).

(c) If the results of step (b) preceding are negative, confirm the magnesium and aluminum tests by placing a drop of 10% sodium hydroxide (NaOH) on a fresh spot. Check for the following:

1) No reaction which will identify the metal as magnesium.

2) A reaction that produces a colorless spot to identify the metal as a clad-aluminum alloy.

3) A reaction that produces a black spot to identify the metal as a bare-aluminum alloy.

(d) If an aluminum alloy is identified in step (c) preceding, further test to distinguish the different alloys by placing a drop of 10% cadmium chloride on a fresh spot.

1) A dark gray deposit forming within a few seconds will identify the metal as 7075 or 7178 bare-aluminum alloy.

2) A drak gray deposit forming within 2 minutes will identify the metal as 7075 or 7178 clad-aluminum alloy.

3) No deposit formation in the time specified for 7075 or 7178 clad will identify the metal as 2024 aluminum alloy (a faint deposit will form after 15 to 20 minutes).

(e) Confirm the austenitic steel test by dissolving 10 grams of cupric chloride ($CuCl_2.2H_2O$) in 100 cubic centimeters of hydrochloric acid and placing a drop of the solution on a fresh spot. After 2 minutes, add three or four drops of distilled water to the drop of hydrochloric acid solution and dry the surface.

1) The appearance of a brown spot identifies the metal as an austenitic steel.

(f) If no reaction was noted in step (a) or (e) preceding, test for a plating material as detailed in steps (a) through (c) of paragraph 5.C.

(g) If step (f) reveals the presence of plating on the nonmagnetic metal, the plating must be removed by mechanical abrasion and the base metal identified by the visual and/or chemical methods outlined in paragraphs 4 and 5.

(h) Clean and refinish as required by paragraph 5.E.

E. Post Identification Cleaning and Refinishing

WARNING: THE REAGENTS USED IN THE CHEMICAL SPOT TEST ARE EXTREMELY CORROSIVE. OBSERVE THE SAFETY PRECAUTIONS OF PAR. 2 NONCOMPLIANCE COULD RESULT IN PERSONNEL INJURY.

(1) After identification of the metal is completed, clean the area as follows:

(a) Blot any remaining chemicals with a dry cloth.

(b) Swab the area several times with a water moistened cloth.

(c) Test the surface by placing a piece of litmus paper on the moistened surface.

(d) If the litmus paper changes color, repeat steps (b) and (c) until no color change occurs.

(e) Dry surface thoroughly.

(f) Remove corrosion, if present, and refinish the surface as applicable.

6. Corrosion Rework Application

A. All corrosion products must be removed completely when corroded structures are reworked as the corroding process will continue even though the affected surface is refinished.

B. Before starting rework of corroded areas, carry out the following:

(1) Position airplane in wash rack or provide washing apparatus for rapid rinsing of all surfaces.

(2) Connect a static ground line to the airplane.

(3) Disconnect or remove airplane batteries as required.

WARNING: DISCONNECT BATTERIES WHEN WORKING IN THE VICINITY OF BATTERY - OPERATED ELECTRICAL EQUIPMENT. REMOVE BATTERIES WHEN WORKING IN THE VICINITY OF THE AIRPLANE BATTERY LOCATION. NONCOMPLIANCE COULD RESULT IN PERSONNEL INJURY.

(4) Protect the pitot-static ports, louvers, airscoops, engine openings, wheels, tires, magnesium skin panels and airplane interior from moisture and chemical brightening agents.

(5) Protect the surfaces adjacent to rework areas from chemical paint strippers, corrosion removal agents and surface treatment materials.

7. Corrosion Removal Procedures for Aluminum and Aluminum Alloys

A. Aluminum and its alloys are the most widely used materials in the construction of commercial airplanes. Aluminum is characterized by an excellent strength to weight ratio, thermal and electrical conductivity, and high reflectance. In addition, this metal is nonmagnetic, nontoxic, and will not spark when struck against other metals. The formation of a tightly adhering oxide film on pure aluminum, or clad surfaces which carry a plating of pure aluminum, offer increased resistance in most corrosive conditions. Corrosive attack on aluminum surfaces is usually obvious, the corrosion products are generally white and more voluminous than the original base metal. Even in the early stages of corrosion, damage is evident as general etching, pitting, and roughness of the surface.

B. Prepare the airplane as required by paragraph 6.B. and remove corrosion products as follows:

WARNING: PERSONNEL USING THIS PROCEDURE MUST OBSERVE THE SAFETY PRECAUTIONS AND PROCEDURES OF PARAGRAPH 2.

(1) Positively identify the metal as aluminum as detailed in paragraph 5.C.

(2) Clean area to be reworked.

(3) Strip paint if required.

(4) Determine extent of corrosion damage as detailed in paragraph 3. To remove light corrosion, proceed with paragraph 7.B.(5) following. To remove moderate or severe corrosion, proceed with paragraph 7.B.(6) following.

(5) Remove light corrosion by light hand-sanding operations or by chemical means as follows:

CAUTION: DO NOT USE THE CHEMICAL REMOVAL PROCESS AT TEMPERATURES ABOVE 100°F OR BELOW 40°F.

(a) Protectively mask adjacent areas to prevent brighteners from contacting magnesium, anodized aluminum, glass, plexiglass, fabric surfaces, and all steel.

WARNING: WEAR ACID-RESISTANT GLOVES, PROTECTIVE MASK AND PROTECTIVE CLOTHING WHEN WORKING WITH CORROSION REMOVING COMPOUNDS. IF CORROSION REMOVING COMPOUND ACCIDENTALLY CONTACTS THE SKIN OR EYES, FLUSH OFF IMMEDIATELY WITH PLENTY OF CLEAR WATER. CONSULT A PHYSICIAN IF EYES ARE AFFECTED OR IF SKIN IS BURNED.

(b) Dilute corrosion removing compound, with two parts water. Mix the compound only in wood, plastic, or plastic lined containers.

NOTE: The diluted solution of corrosion removing compound may be applied to large exterior surfaces with a nonatomizing spray, starting from lower surfaces and working upwards.

(c) Apply diluted solution by brush, starting from lower surfaces and working upward to minimize runs and streaks.

(d) Leave the solution on surface from 5 to 30 minutes, depending on the temperature and the amount of corrosion present. Agitate occasionally with the brush used for application. Do not allow solution to dry on surface, as streaking will result.

NOTE: On large exterior surfaces, remove solution by high pressure water rinse.

(e) Wipe off solution with a clean, moist cloth: frequently rinsing the cloth in clear water. Wipe area several additional times with fresh cloth dampened and rinsed frequently in clear water.

(f) Dry area with clean, dry cloth and inspect for corrosion.

CAUTION: DO NOT REPEAT OPERATION MORE THAN ONCE. IF CORROSION STILL REMAINS AFTER SECOND ATTEMPT, MECHANICALLY REMOVE CORROSION AS DETAILED IN PARAGRAPH 7.B.(6).

(g) Repeat paragraphs 7.B.(5)(c) through (5)(f) if any corrosion remains.

(h) After all corrosion has been removed, proceed with paragraph 7.B.(8).

(6) Mechanically remove moderate or severe corrosion by the appropriate methods as follows:

WARNING: WEAR GOGGLES OR FACE SHIELD TO PROTECT AGAINST ANY CORROSION PARTICLES THAT BREAK LOOSE AND FLY OFF.

CAUTION: PROTECT ADJACENT AREAS TO PREVENT ADDITIONAL DAMAGE FROM CORROSION PRODUCTS REMOVED DURING MECHANICAL REMOVAL.

NOTE: On alodized surfaces, take care to avoid damage to the area adjacent to that being reworked.

(a) Remove loose corrosion products by hand scraping with a carbide-tipped scraper or fine fluted rotary file.

NOTE: For alternate method of dry abrasive blasting, refer to paragraph 15.

(b) Remove residual corrosion by hand sanding or with approved hand-operated power tool. Select appropriate abrasive from figure 2.

(c) After removing all corrosion visible through a magnifying glass, apply corrosion removing compound as detailed in paragraph 7.B.(5) and proceed with paragraph 7.B.(7) following.

(7) Blend into surrounding surface any depressions resulting from rework and surface finish with 400-grit abrasive paper.

(8) Clean reworked area. Do not use kerosene.

(9) Determine depth of faired depressions as detailed in paragraph 3.D. to ensure that rework limits have not been exceeded.

(10) Prepare and apply alodine as follows:

(a) Determine whether rework on clad material has penetrated to the base metal as follows:

1) Clean the test area as required by 51-10-2.

2) Apply one drop of a 10% solution of sodium hydroxide (NaOH caustic soda) to the test area and allow to stand for 30 seconds. If the bottom of the reworked area turns black, the clad coating has been penetrated.

3) Thoroughly water rinse the tested area and dry with a clean cloth.

4) When rework has penetrated the clad coating, apply alodine treatment as detailed in 51-10-2.

(11) Apply original finish.

(12) Remove masking and protective covering.

8. Corrosion Removal Procedure for Magnesium Alloys

A. Magnesium is the most chemically active metal used in airplane construction and is, therefore, the most difficult to protect. By the same token, when a failure in the protective coating does occur, the prompt and complete correction of the coating failure is imperative if serious structural damage is to be avoided. Magnesium corrosion is possibly the easiest type of corrosion to detect, since even in its early stages the corrosion products occupy several times the volume of the original magnesium metal. The beginning attack shows as a lifting of the paint film and as white spots on the surface, which rapidly develop into snow like mounds or whiskers. Correction of damage involves the complete removal of corrosion, the restoration of surface coatings by chemical treatment, and a reapplication of protective coatings. Corroded magnesium parts should be removed from the aircraft, if possible, for treatment. When impossible to remove part, make preparations detailed in paragraph 6 and proceed as follows:

WARNING: PERSONNEL USING THIS PROCEDURE MUST OBSERVE THE SAFETY PRECAUTIONS AND PROCEDURES OF PARAGRAPH 2.

(1) Positively identify the metal as magnesium. Refer to paragraph 5.

(2) Clean area to be reworked.

(3) Strip paint if required.

(4) Determine extent of corrosion damage. Refer to paragraph 3. To remove light corrosion, proceed with paragraph 8.A.(5) following. To remove moderate or severe corrosion, proceed with paragraph 8.A.(6) following.

(5) Remove light corrosion by light hand sanding or chemically as follows:

CAUTION: DO NOT USE THE FOLLOWING PROCEDURE FOR ADHESIVE BONDED PARTS OR ASSEMBLIES, AREAS WHERE THE BRUSH-ON SOLUTION MIGHT BECOME LODGED, OR LOCAL AREAS BARED SPECIFICALLY FOR GROUNDING OR ELECTRICAL BONDING PURPOSES.

(a) Remove the loose corrosion with aluminum wool.

(b) Mask off other materials and parts, especially rubber parts, bearings, and cast or pressed inserts to prevent contact with the treating solution or its fumes.

(c) Prepare corrosion treating solution in the following proportions: 1-1/2 pounds of sodium dichromate and 1-1/2 pints of concentrated nitric acid per gallon of water. Mix as follows:

NOTE: Prepare and store the solution in clean polyethylene or glass containers.

1) Fill a suitable container with a volume of water equal to approximately one-fourth the desired total quantity of solution.

2) Add full quantity of sodium dichromate in proportions indicated above and agitate solution until the chemical is dissolved.

3) Add water until quantity of solution is equal to approximately two-thirds the desired total.

4) Slowly add total volume of nitric acid to solution and mix thoroughly.

5) Add water until total desired quantity of solution is reached and stir until entire solution concentration is equal.

a) Remove remaining corrosion by swabbing the corroded surface 1 to 2 minutes with the nitric acid solution prepared in paragraph 8.A.(5)(c) then wipe dry.

b) Rinse thoroughly with clean water while scrubbing with a mop or brush and wipe dry.

c) Repeat the preceding sequence, as necessary, until all corrosion has been removed.

d) After all corrosion has been removed, proceed with paragraph 8.A.(8) following.

(6) Mechanically remove moderate or severe corrosion by the following method:

WARNING: GOGGLES OR FACE SHIELD MUST BE USED TO PRECLUDE INJURY FROM CORROSION PARTICLES BREAKING LOOSE AND FLYING OFF.

CAUTION: DO NOT USE CARBON STEEL WIRE BRUSHES OR SILICONE CARBIDE ABRASIVES ON MAGNESIUM. PROTECT ADJACENT AREAS TO PREVENT ADDITIONAL DAMAGE FROM CORROSION PRODUCTS REMOVED WHEN USING THIS PROCESS.

(a) Remove heavy corrosion products by hand wire brushing with a stainless steel brush.

(b) Remove residual corrosion by hand sanding or with approved hand-operated power tool. Select appropriate abrasive from figure 2.

(c) After removing all corrosion visible through a magnifying glass, apply corrosion treating solution as detailed in paragraph (5)(c)5) and continue with subparagraph (7) following:

(7) Fair depressions resulting from rework as detailed in paragraph 4.C. and surface finish with 400-grit abrasive paper.

(8) Clean reworked area. Do not use kerosene.

(9) Determine depth of faired depressions as detailed in paragraph 3 to ensure that rework limits have not been exceeded.

(10) Prepare and apply magnesium conversion coating as follows:

CAUTION: DO NOT USE THE FOLLOWING PROCEDURE FOR ADHESIVE BONDED PARTS OR ASSEMBLIES, AREAS WHERE THE BRUSH-ON SOLUTION MIGHT BECOME LODGED, OR LOCAL AREAS BARED SPECIFICALLY FOR GROUNDING OR ELECTRICAL BONDING PURPOSES.

(a) Measure 1 gallon of distilled water into a clean polyethylene or glass container.

(b) Add 1.3 ounces (dry) of chromium trioxide.

(c) Add 1 ounce of calcium sulfate dehydrate.

(d) Vigorously stir for at least 15 minutes to ensure that the solution is saturated with calcium sulfate.

NOTE: Let chromate solution stand for 15 minutes prior to decanting.

(e) Prior to use, decant solution (avoid transfer of undissolved calcium sulfate) into suitable usage containers (polyethylene or glass).

(f) Apply solution by swabbing until the metal surface becomes dull golden to dark brown in color. Use caution in swabbing on the solution. Severe rubbing of the wet surface will damage the coating.

CAUTION: HIGH PRESSURE SPRAYING OR RUBBING ABRASION WILL DAMAGE THE FRESH COATING.

(g) Rinse with clean, cold water, then allow to dry at ambient temperature. Force air dry if possible.

(11) Apply original finish.

(12) Remove masking and protective covering.

9. Corrosion Removal Procedures for Carbon Steel

A. General. Carbon steel in its heat treated form is used in areas where high structural or aerodynamic loads occur on the airplane. Landing gears, flap tracks, structural splices, terminal fittings and miscellaneous brackets are some of the typical parts made from heat treated carbon steel. Red iron rust is one of the most familiar kinds of corrosion on carbon steel and generally caused from formation of ferrous oxides due to atmospheric exposure. Some surface metal oxides are purposely used to protect the underlying base metal. Red iron rust is not one of these and actually attracts moisture from the air and promotes additional corrosion. The red rust first shows on unprotected airplane hardware such as bolts, nuts and exposed fittings. Slight corrosion damage on highly stressed steel parts becomes potentially dangerous and the rust shall be removed and controlled. Corroded steel parts should be removed from the airplane for treatment if possible. The general procedures for corrosion removal are outlined in the following paragraphs.

WARNING: PERSONNEL USING THESE PROCEDURES SHALL OBSERVE THE SAFETY PRECAUTIONS AND PROCEDURES OUTLINED IN PAR. 2.

B. Corrosion Removal - Mechanical

(1) Positively identify the metal as steel and determine its heat-treat value. (Ref. par. 5 and 51-10-3).

(2) Protect adjacent area to prevent additional corrosion damage from corrosion products removed during mechanical removal.

(3) If grease or soil is present clean the rework area.

(4) Strip paint if applicable.

CAUTION: HAND-HELD POWER TOOLS MUST NOT BE USED ON HIGH STRENGTH STEELS HEAT-TREATED TO 220,000 PSI AND ABOVE. EXERCISE EXTREME CARE WHEN USING TOOLS ON HIGH STRENGTH STEEL NOT TO OVERHEAT THE STEEL SURFACE.

(5) Corrosion removal on steels heat-treated to 220,000 psi and above shall be accomplished by dry abrasive blasting as outlined in par. 15, with blasting pressures ranging from 40 to 70 psi or hand tools described in par. 4.

(6) Mechanically remove all corrosion from steel parts heat-treated below 220,000 psi as follows:

(a) Remove heavy corrosion products using stainless steel hand brush. Use dry abrasive blasting per par. 15, as an alternate method with blasting pressures ranging from 40 to 70 psi.

(b) Remove residual corrosion by hand sanding or with approved hand-operated power tool as outlined in par. 4. Select appropriate abrasives from Fig. 2.

(7) Make visual check through a 10-power magnifying glass to ensure that all corrosion is removed.

(8) Fair depressions resulting from rework per par. 4, and surface finish with 400 grit abrasive paper selected from Fig. 2.

(9) Clean reworked area.

(10) Determine depth of faired depression per par. 3, to ensure that rework depth limits have not been exceeded.

(11) Restore the protective finish immediately upon completion of rework.

C. Corrosion Removal - Chemical. Chemical rust removers are of either the acid or alkaline type. The acid type is intended for use in removing the rust or black oxide formations by either immersion or brush application of the chemical. The alkaline type is intended for use in removing red rust by immersion treatment. Procedures for the use of both types of rust removers are outlined below.

CAUTION: STEEL PARTS HEAT-TREATED ABOVE 220,000 PSI ARE SUBJECT TO HYDROGEN EMBRITTLEMENT, AND THE USE OF ACID IS PROHIBITED.

(1) Inhibited Phosphoric Acid Base Rust Remover - Brush-on Method

(a) Positively identify the metal as steel.

(b) Protect adjacent area to prevent additional damage from the chemical agents.

(c) If grease or soil is present clean the corrosion area .

(d) Remove heavy rust by chipping and/or wire brushing with stainless steel bristle brush.

(e) Dilute the concentrated acid by adding one part of acid to one part of water in acid resistant mixing container. Do not add water to acid; always add acid to water.

(f) Apply the acid mixture to corroded area with acid-resistant brush. Allow to remain long enough to loosen rust (2 to 10 minutes) and rinse with clean water completely.

(g) Examine corroded area visually with 10-power magnifying glass.

(h) If corrosion is still evident repeat application and rinse thoroughly.

(i) After removal is complete, blend or fair area affected per par. 4.

(j) Determine depth of faired depressions per par. 3, to ensure that rework limits have not been exceeded.

(k) Restore the protective finish immediately upon completion of rework.

(2) Inhibited Phosphoric Acid Base Acid Rust Remover - Immersion Method

NOTE: This method is to be used for removing heavy rust from parts removed from the airplane and where the corroded area can be completely immersed.

(a) Positively identify the metal as steel.

(b) If grease or soil is present clean the corrosion area.

(c) Remove heavy corrosion by chipping and/or wire brushing with stainless steel wire brush.

(d) Prepare the acid mixture per step (1)(e) above.

(e) Immerse the parts in acid solution only long enough to loosen the rust. The solution may be heated to a maximum of 104°F to increase the removal rate. Agitation will also help.

(f) Rinse in continuously flowing cold water rinse tank or flood with clean water.

(g) Visually examine the corrosion area with 10-power magnifying glass.

(h) If corrosion still exists, repeat immersion steps.

(i) After removal is complete fair or blend the reworked area per par. 4.

(j) Determine depth of faired depression per par. 3, to ensure that rework limits have not been exceeded.

(k) Restore the protective finish immediately upon completion of rework.

(3) Alkali Type Rust Remover

WARNING: THE ALKALI RUST REMOVER, SODIUM HYDROXIDE BASE, IS HIGHLY ALKALINE AND THEREFORE HARMFUL TO SKIN AND EYES. PERSONNEL SHOULD WEAR RUBBER GLOVES, APRONS AND GOGGLES WHEN WORKING WITH THIS MATERIAL. USE WITH ADEQUATE VENTILATION.

(a) Positively identify metal as steel.

(b) Protect adjacent components to prevent damage from the chemical agents, chips, scales, or corrosion products.

(c) Remove grease and soil from corrosion damage area.

(d) Remove heavy rust by chipping and/or wire brushing with stainless steel bristle brush.

(e) Prepare alkali base rust remover solution per manufacturer's instruction. Carbon steel or corrosion resistant steel tanks may be used.

(f) Immerse parts in rust remover solution. Temperature up to the boiling point of the solution may be used to increase the rate of removal.

(g) Rinse thoroughly in clean water.

(h) Visually inspect for complete corrosion removal with a 4- to 10-power magnifying glass.

(i) If corrosion still exists, repeat immersion procedure above.

(j) Dry thoroughly and fair or blend depressions from corrosion removal per par. 4.

(k) Determine depth of faired depressions per par. 3, to ensure that rework limits have not been exceeded.

(l) Restore protective finish immediately upon completion of rework.

9A. Corrosion Removal Procedure for Stainless Steel and Nickel-Chromium Alloys

A. General. Stainless steel and nickel-chromium alloys are used where corrosion resistance is one of the major considerations in the design of the component or system. In most applications these steels will have no other surface protection except for matching color schemes of the surrounding structure or dissimilar metal organic coatings. Stainless steel and nickel-chromium steels, however, are not free from corrosion attack. Corrosion usually appears as pits usually black in color. The existence of corrosion products prevents a passivated environment at the stainless steel surfaces and creates an active-passive corrosion cell. It is therefore necessary that the corrosion removal is complete.

CAUTION: ABRASIVE BLASTING OR GRINDING SHALL NOT BE USED ON THIN WALL TUBES OR THIN WEBS LESS THAN 0.0625 INCH THICK.

B. Corrosion Removal - Mechanical. Use the same general procedures as for carbon steel.

C. Corrosion Removal - Chemical. In severely corroded areas and where chemical agents will not be trapped in crack, crevices, lap joints, etc., the chemical removal methods described for carbon steel are applicable.

10. Corrosion Removal Procedures for Titanium Alloys

WARNING: PERSONNEL USING THIS PROCEDURE MUST OBSERVE THE SAFETY PRECAUTIONS AND PROCEDURES DETAILED IN PARAGRAPH 2.

CAUTION: PROTECTIVELY MASK ADJACENT AREAS TO PREVENT CONTAMINATION BY CHEMICALS. PREPARE THE AIRPLANE AS DETAILED IN PARAGRAPH 6.

A. Titanium is generally corrosion resistant. Periodic removal of surface deposits is required to minimize high temperature deterioration. If titanium surfaces require cleaning, hand polish with aluminum polish and a soft cloth until all traces of corrosion or surface deposits are removed. Remove the aluminum polish. Treat the cleaned surface with a solution of 13 to 26 ounces (weight) of sodium dichromate per gallon of water. Apply solution with fiber brush or cloth, keeping surface wet for 5 minutes. Wipe treated surfaces with dry cloths to remove excess solution. Do not water rinse. Remove masking and protective covering.

11. Corrosion Removal Procedures for Plated Surfaces

A. Chromium, electroless nickel, electrodeposited nickel, cadmium, and zinc are used to plate other metals. Cadmium and zinc are used for corrosion protection applications because these metals will corrode sacrificially to protect the base metal. Cadmium and zinc will continue to offer corrosion protection even though pores or other discontinuities may exist in the plating. Chromium and certain nickel platings, although having excellent resistance to corrosion, are generally used to provide a smooth, wear-resistant surface or to reclaim worn parts. Corrosion removal from plated parts is restricted because of the danger of removing the plating.

12. Corrosion Removal from Chromium and Nickel Plated Parts

A. The amount of reworking that can be performed on chromium and nickel-plated components is limited. This is due to the critical requirements to which such components are subjected. The rework should consist of light buffing to remove corrosion products and produce the required smoothness. This is permissible provided the buffing does not take the plating below the minimum allowable thickness. Whenever a chromium or nickel-plated component required buffing, coat the area with corrosion preventive compound, if possible. When buffing exceeds the minimum thickness, or the base metal has sustained corrosive attack, the component must be removed and replaced. The removed component can be restored to serviceable condition by having the old plating completely stripped and replated in accordance with acceptable methods and specifications.

13. Corrosion Removal from Cadmium and Zinc-Plated Parts

A. Due to the critical requirements of cadmium and zinc-plated components, the amount of rework that can be accomplished is limited. Check condition of the cadmium or zinc-plating and accomplish the following:

CAUTION: PROTECTIVELY MASK ADJACENT AREAS TO PREVENT CONTAMINATION BY CHEMICALS. PREPARE THE AIRPLANE AS DETAILED IN PARAGRAPH 6.

(1) If corrosion has begun but has not penetrated to the base metal, continue as in subparagraph (2) following. If corrosion has begun and it has penetrated to the base metal, continue as in subparagraph (3) following.

(2) Remove corrosion that has not penetrated to the base metal as follows:

CAUTION: EXERCISE CARE WHEN REMOVING CORROSION TO CONSERVE THE PLATING MATERIAL.

(a) Remove corrosion by rubbing lightly with stainless steel wool.

(b) Swab affected area with chromic acid solution (4 ounces of chromium trioxide, type II, to 1 gallon water). Allow acid to remain on the surface 30 to 60 seconds.

(c) Rinse with water and air dry.

(d) Refinish as detailed in paragraph 13.A.(4) and (5) following, whichever is applicable.

(3) Remove corrosion that has penetrated to the base metal as follows:

(a) Determine from specific repair whether the part is to be reworked or replaced.

(b) If part is to be reworked, identify the base metal as in paragraph 5 and accomplish corrosion removal per applicable procedures in this section.

(c) Refinish as required by paragraph 13.A.(4) and (5) following, whichever is applicable.

(4) Only parts which can be removed from the airplane and reduced to the unit detail can be replated. Replate as required by paragraph 14.

(5) If part cannot be removed from the airplane, apply an approved protective finish or specific organic finish as designated in the 737 Maintenance Manual.

WARNING: PERSONNEL USING THIS PROCEDURE MUST OBSERVE THE SAFETY PRECAUTIONS AND PROCEDURES DETAILED IN PARAGRAPH 2.

14. Cadmium Plating

A. Use the following procedure for replating with cadmium:

(1) Only parts that can be removed from the airplane and reduced to a unit detail (plating of assemblies is impractical) may be cadmium plated.

(2) Aluminum parts should be reworked per the applicable procedure in this section and should not be stripped of cadmium.

(3) Steel parts having tensile strength of 220,000 psi or above must not be stripped or replated. Rework and finish as detailed in paragraph 9.

(4) Clean parts and strip paint, if present. Strip cadmium in a solution of 1 pound of technical grade ammonium nitrate per gallon of water. Strip existing plating from part for the shortest possible time required to completely remove plating. Use stripping solution at approximately room temperature of 21°C (70°F). Strip zinc plating in accordance with acceptable methods.

(5) Remove corrosion from base metal using the applicable procedure in this section.

(6) All steel parts including stainless steel heat-treated 160,000 to 220,000 psi shall be baked at 375 (± 25)°F for 3 hours prior to plating.

(7) Cadmium plate as required by the applicable repair.

(8) Bake parts as required by paragraph 14.A.(6) after plating, unless otherwise specified in specific repair.

(9) Apply surface treatment and organic finish as required by specific repair.

15. Mechanical Corrosion Removal by Blasting

CAUTION: WHEN YOU DO ABRASIVE BLAST PROCEDURES IN AREAS WHERE LUBRICATION FLUIDS OR GREASE ARE APPLIED, USE CARE TO PREVENT CONTAMINATION OF THE LUBRICANT WITH THE BLAST RESIDUE. THIS CONTAMINATION CAN AFFECT THE LUBRICATION PROPERTIES AND THE RESULT CAN BE INCREASED WEAR OF THE LUBRICATED PARTS.

A. Abrasive blasting is a process for cleaning or finishing metals, plastics, and other materials by directing a stream of abrasive particles against the surface of the parts. Abrasive blasting is used for the removal of rust and corrosion and for cleaning prior to further processing such as painting or plating. Standard blast cleaning practices should be adopted with the following requirements being met:

(1) Any form of blast cleaning equipment may be used; but in-cabinet blasting is preferred.

(2) External gun blasting may be used if adequate confinement and recovery are provided for the abrasives.

WARNING: AVOID EXCESSIVE INHALATION OF ABRASIVE DUST PROVIDE VENTILATION AS REQUIRED.

CAUTION: MAGNESIUM CREATES A FIRE HAZARD WHEN ABRASIVE BLASTED ADEQUATE PRECAUTIONS MUST BE TAKEN WHEN ABRASIVE BLASTING THIS METAL.

DRY ABRASIVE BLASTING OF TITANIUM ALLOYS AND HIGH TENSILE STRENGTH STEEL CREATES SPARKING. CARE MUST BE TAKEN TO ASSURE THAT THERE IS NO HAZARDOUS CONCENTRATION OF INFLAMMABLE VAPORS PRESENT.

STATIC GROUND THE DRY ABRASIVE BLASTER AND THE MATERIAL TO BE BLASTED.

(4) Part to be blast-cleaned should be removed from component if possible; otherwise, areas adjacent to part must be masked or protected from abrasive impingement.

(5) Parts must be cleaned of oil, grease, dirt, etc., and dried prior to blast cleaning.

(6) Close-tolerance surfaces, such as bushings, bearing shaft, etc., must be masked.

(7) Blast-clean only enough to remove corrosion coating. Proceed immediately with finishing requirement using surface treatments as outlined in par. 7 through 9.

BOEING PROPRIETARY - Copyright © - Unpublished Work - See title page for details.

16. ALUMINUM SKIN CORROSION PROTECTION

A. Corrosion protection of the aluminum skin can further be enhanced by applying an aluminized corrosion inhibiting finish to the metal surface. For instance, most corrosion occurs in the ram air inlet ducting, around fastener heads, on the wing center section lower skin surface, and on the center section beam outboard surfaces. Proceed as follows:

(1) Brush alodize area per 51-10-2.

(2) Apply chemical and solvent-resistant primer to the bare metal surfaces per operator's standard procedure. Refer to 51-40-5.

NOTE: Previously painted areas should be reactivated with 240 grit or finer abrasive paper and cleaned with methyl ethyl ketone (MEK).

(3) Mix and apply two coats of aluminized corrosion inhibiting finish (resin, corrogard 14, EC-843 and aluminum powder EC-1101) to the affected areas per operator's standard procedure. (Refer to 51-21, 737 Maintenance Manual.)

NOTE: As an option to application of aluminized corrosion inhibiting finish, one of the following sealants may be used:

(a) Product Research PR 1422 or PR 1436G

(b) Coast Pro-Seal 890 or 898

Class A sealants are brushable. Class B sealants may be thinned 12% by weight with a 50/50 mixture of MEK and toluene.

(4) Reinstall all equipment removed for inspection and sealant application, and functionally test the system per operator's standard procedure.

NOTE: Use Dow-Corning Adhesive 30-121, or equivalent, to seal aft ram air inlet duct to airplane structure.

Fastener holes which are oversized after all traces of corrosion are removed should be repaired in accordance with 51-30 or 57-30.

BOEING PROPRIETARY - Copyright © - Unpublished Work - See title page for details.

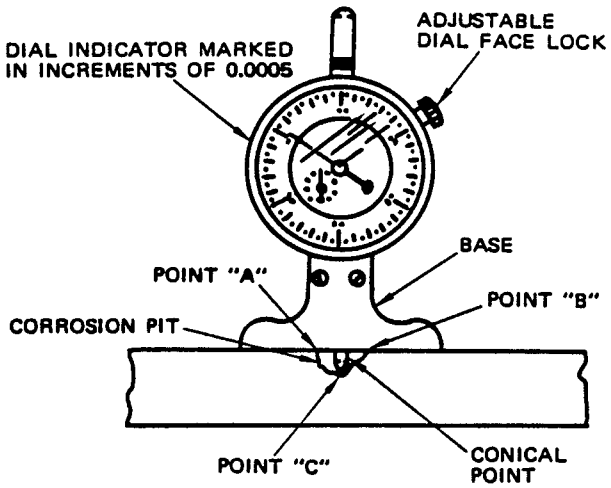

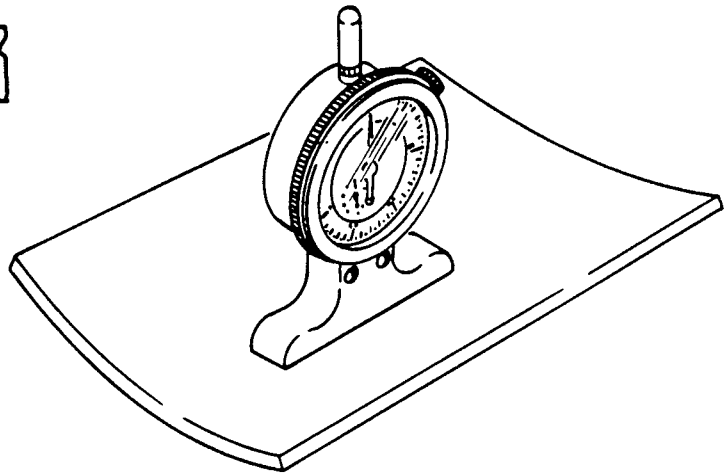

DETAIL I

NOTE

- DEPTH DIAL GAGE 0 TO 0.500 INCH RANGE.
- TAKE MEASUREMENT READINGS PERPENDICULAR TO THE RADIUS OF CONCAVE OR CONVEX SURFACES SEE DETAIL I.
- TAKE MEASUREMENT READINGS ON EDGES ADJACENT TO CORROSION DAMAGE OR BLENDED DEPRESSION (POINTS "A" AND "B"). TAKE SEVERAL READINGS AROUND CENTER OF CORROSION DAMAGE OR BLENDED DEPRESSION (SEE DETAIL II) AND CONSIDER THE DEEPEST READING TO BE POINT "C." DETERMINE DEPTH AS FOLLOWS:

$$\text{DEPTH} = C - \frac{(A + B)}{2}$$

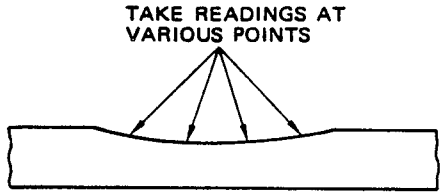

DETAIL II

Corrosion Damage and Rework Measurement Using Depth Dial Gage
Figure 1

METALS OR MATERIALS TO BE PROCESSED	RESTRICTIONS	OPERATION	ABRASIVE PAPER OR CLOTH			ABRASIVE FABRIC OR PAD	WOOL		PUMICE 350 MESH OR FINER	ABRASIVE WHEEL
			ALUMINUM OXIDE	SILICON CARBIDE	GARNET		ALUM-INUM	STAIN-LESS STEEL		
FERROUS ALLOYS HEAT TREATED TO 220,000 PSI AND ABOVE	DO NOT USE ACID BASE RUST REMOVERS. DO NOT USE HAND-HELD POWER TOOLS	CORROSION REMOVAL OR FAIRING	150-FINER	150-FINER		FINE TO ULTRA-FINE	X	X	X	
		FINISHING	400				X	X	X	
FERROUS ALLOYS	DOES NOT APPLY TO STEEL HEAT TREATED TO STRENGTHS TO 220,000 PSI AND ABOVE	CORROSION REMOVAL OR FAIRING	150-FINER	180-FINER		FINE TO ULTRAFINE	X	X	X	X
		FINISHING	400				X	X	X	
ALUMINUM ALLOYS EXCEPT CLAD ALUMINUM	DO NOT USE SILICON CARBIDE ABRASIVE	CORROSION REMOVAL OR FAIRING	150-FINER		7/0-FINER	VERY FINE AND ULTRAFINE	X		X	X
		FINISHING	400				X		X	
CLAD ALUMINUM	SANDING LIMITED TO THE REMOVAL OF MINOR SCRATCHES	CORROSION REMOVAL OR FAIRING	240-FINER		7/0-FINER	VERY FINE AND ULTRAFINE			X	X
		FINISHING	400						X	
MAGNESIUM ALLOYS		CORROSION REMOVAL OR FAIRING	240-FINER			VERY FINE AND ULTRAFINE	X		X	X
		FINISHING	400				X		X	
TITANIUM		CLEANING AND FINISHING	150-FINER	180-FINER				X	X	X
PLATED OR PHOSPHATED SURFACES		REFER TO APPROPRIATE BASE METAL FOR CORROSION REMOVAL						X		

Abrasives for Corrosion Removal
Figure 2

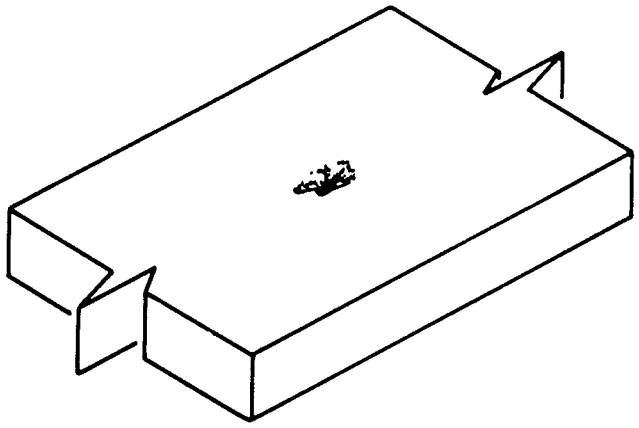

PIT HAS BEEN CLEANED UP TO THE EXTENT THAT ALL LOOSE CORROSION PRODUCTS HAVE BEEN REMOVED.

CORROSION DAMAGE BEFORE REWORK

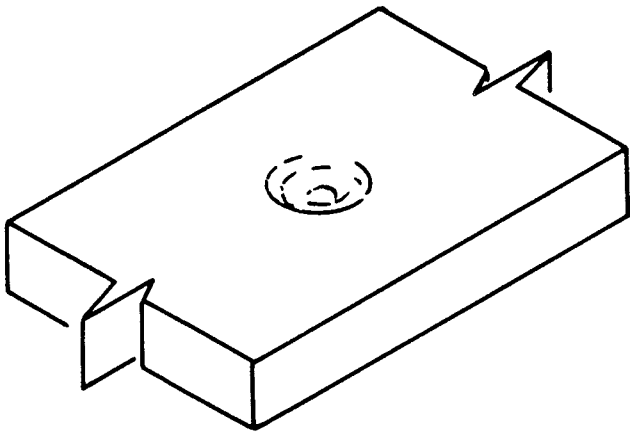

ROUGH EDGES HAVE BEEN SMOOTHED AND ALL CORROSION HAS BEEN REMOVED. HOWEVER, DEPRESSION HAS NOT BEEN SHAPED.

DEPRESSION AFTER CORROSION REMOVAL

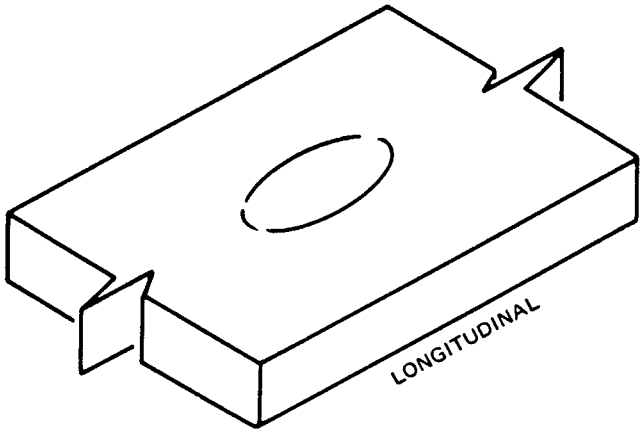

BLENDING HAS BEEN ACCOMPLISHED IN THE RATIO AND DIRECTION SHOWN IN FIGURE 4.

DISH–OUT AFTER BLENDING

Blendout of Corrosion as Single Depression
Figure 3

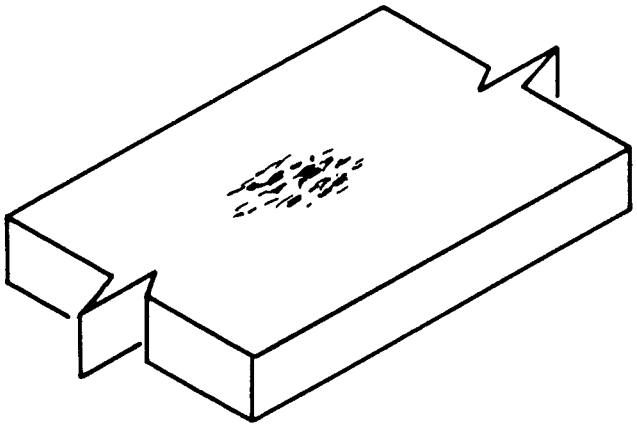

CORROSION DAMAGE
BEFORE REMOVAL

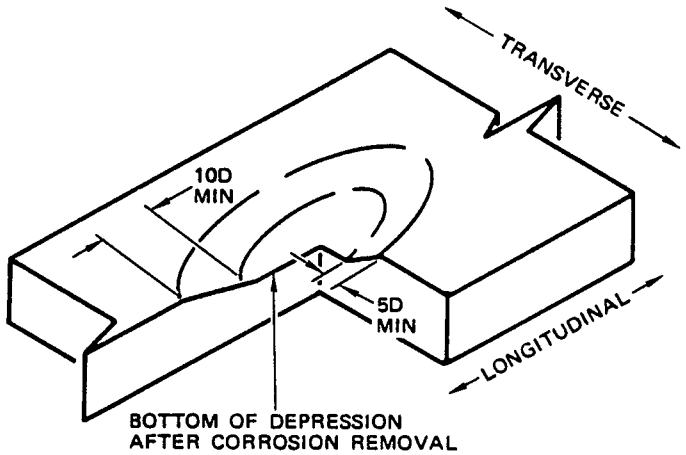

DAMAGE REMOVED AND SURFACE SMOOTHED
WITH SHALLOW ELLIPTICAL DISH–OUT

NOTE

- D = DEPTH OF DEPRESSION
- REFER TO SPECIFIC ALLOWABLE DAMAGE LIMITS FOR MAXIMUM ALLOWABLE DEPTH.
- SINCE MAXIMUM DEPTH VARIES AT DIFFERENT LOCATIONS, MAXIMUM SIZE OF DISH-OUT WILL ALSO VARY
- THE BLENDING RATIO SHALL BE MAINTAINED AT ALL TIMES UNLESS OTHERWISE SPECIFIED IN A SPECIFIC REPAIR.
- SEE DETAIL I FOR EXAMPLE OF BLENDING.

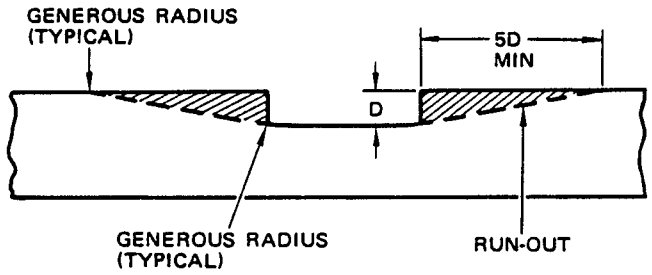

EXAMPLE OF 1:5 BLENDING RATIO
DETAIL I

Blendout of Multiple Pits in Corroded Area
Figure 4

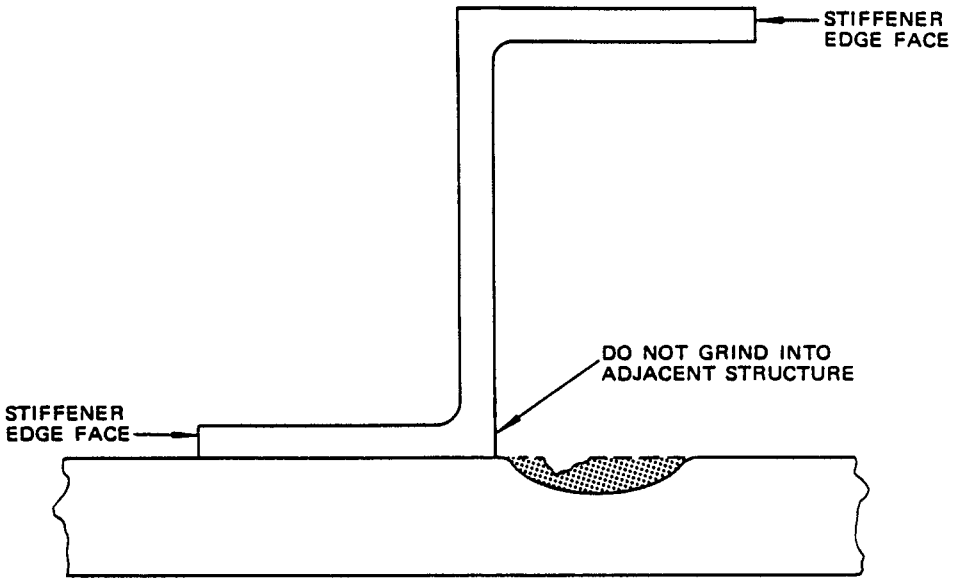

Profile of Reworked Corroded Areas in Regions of Limited Access
Figure 5

1. Cheesecloth or new rags

2. Cleaning brushes, fiber, nylon and wire

3. Aluminum wool and steel wool

4. Aluminum oxide paper, 220 or finer

5. Acid brighteners for aluminum

   NOTE: The following materials must be diluted with 3 parts water prior to use.

   A. Kelite L-20, Richardson Chemical Co., Allied-Kelite Products Div., 1250 N. Main St., P.O. BOX 2917 Terminal Annex, Los Angeles, California 90051

   B. Metal Glo No. 2, Turco Products Inc., Division of Purex Corp., Ltd., 24600 S. Main St., Wilmington, Calif. 90746

6. Phosphoric acid type corrosion removers for aluminum

   A. Kelite Process K, Richardson Chemical Co., Allied-Kelite Products Div., 1250 N. Main St., P.O. BOX 2917 Terminal Annex, Los Angeles, California 90051

      NOTE: Before use, dilute with 8 parts water.

   B. Oakite 36, Oakite Produts, Inc., 558 First Ave. So., Seattle, Wa. 98104

      NOTE: Before use, dilute with 4 parts water.

   C. Turco W.O. No. 1, Turco Products, Inc., Division of Purex Corp., Ltd., 24600 S. Main St., Carson, Calif. 90749

      NOTE: Before use, dilute with 6 parts water.

7. Phosphoric acid type corrosion removers for steel

   NOTE: The following materials must be diluted with 3 parts water before use.

   A. GMC 801, Greater Mountain Chemical Co., 15 Jeremy, Salt Lake City, Utah 84104

   B. Kelite Process K, Richardson Chemical Co., Allied-Kelite Products Div., 1250 N. Main St., P.O. BOX 2917 Terminal Annex, Los Angeles, California 90051

   C. Oakite 31, Oakite Products, Inc., 558 First Ave. So., Seattle, Wa. 98104

   D. Turco Prepaint, Turco Products, Inc., Division of Purex Corp., Ltd., 24600 S. Main St., Carson, Calif. 90749

Corrosion Removal and Control - Equipment and Materials
Figure 6 (Sheet 1)

8. Nitric acid, concentrated, Federal Specification O-A-88

9. Alodine 1000 and 1200S

10. Dow 1 and 19 solutions

11. Sodium dichromate or potassium dichromate

12. Chromic acid

13. Powdered calcium sulphate

Corrosion Removal and Control - Equipment and Materials
Figure 6 (Sheet 2)

HOLE DRILLING AND MACHINING OF COMPOSITE STRUCTURES

1. General

A. This section contains machining information for advanced composite structures. Advanced composites, graphite, and especially aramid structures require special drilling, trimming, and countersinking techniques to prevent excessive fiber breakout and/or delamination. Machining information in graphite/aramid-to-aluminum/titanium structures, countersinking in graphite/aramid structures, deburring, and hole quality is also included.

B. Refer to 51-30-00 for general fastener information.

(1) Refer to 51-30-5, Fig 5 for fastener hole sizes in composite structure.

(2) Refer to 51-30-8 for fastener countersink hole dimensions.

C. The equipment required for drilling and trimming operations is listed in Fig. 1.

WARNING: DO NOT BREATHE CARBON FIBER DUST. MAKE SURE THAT THERE IS A GOOD FLOW OF AIR WHERE YOU DO THE WORK. USE EQUIPMENT TO HELP YOU BREATHE WHEN YOU WORK IN A CONFINED SPACE. USE A VACUUM NEAR THE SOURCE OF THE DUST TO REMOVE THE DUST FROM THE AIR. IF YOU DO NOT OBEY, YOU CAN CAUSE INJURY.

CAUTION: DO NOT LET CARBON FIBER DUST GO INTO ELECTRICAL EQUIPMENT. CARBON FIBER DUST IS ELECTRICALLY CONDUCTIVE AND IT CAN CAUSE SHORT CIRCUITS IF IT GOES INTO ELECTRICAL EQUIPMENT. USE A VACUUM NEAR THE SOURCE OF THE DUST TO REMOVE THE DUST FROM THE AIR. IF YOU DO NOT OBEY, YOU CAN CAUSE DAMAGE TO THE ELECTRICAL EQUIPMENT.

D. Health and safety precautions should be observed when conducting hole preparation operations contained herein.

E. Composite materials cause several problems that are not found in metallic materials. Refer to Fig. 1, table V, for a list of comparative hole preparation properties.

2. Hole Drilling in Graphite or Graphite/Fiberglass Structures

A. See Fig. 1, table VI for drill selection, speed, feed and lubrication requirements.

CAUTION: GRAPHITE/EPOXY DUST IS ABRASIVE AND MACHINES SHOULD BE PROTECTED.

GRAPHITE/EPOXY DUST CONTROL IS BEST ACCOMPLISHED BY A HIGH-VELOCITY, LOW VOLUME VACUUM SYSTEM AT THE CUTTER BEFORE THE DUST CAN SETTLE ON MACHINES OR BE INHALED. VACUUM NOZZLE AIRFLOW SHOULD BE AT LEAST 3 TIMES HIGHER THAN DUST VELOCITY.

B. The drill operation is best accomplished by placing the drill against the work without rotation, applying a steady, medium force, and then operating the drill motor.

NOTE: Some trial drilling on scrap material is recommended. Slow, cautious feeding will result in chatter of the drill and oversized holes. Excessive feed force may cause ramming of drill into the work.

C. Ensure that the drill is normal to the work surface.

D. Refer to Fig. 1, table XIII for maximum recommended reaming speeds.

CAUTION: DRILL DRY FOR THICKNESSES UP TO 1-1/2 TIMES THE DRILL DIAMETER. FOR MATERIAL OVER 1-1/2 DRILL-DIAMETERS THICK, ALSO DRILL DRY IF POSSIBLE.

3. Hole Drilling in Graphite-to-Aluminum Structures

A. See Fig. 1, table VII for drill selection, speed, feed and lubrication requirements.

B. Drill from the graphite side producing either a No. 30 or an No. 40 pilot hole for location and the reduction of fiber breakout.

C. Refer to Fig. 1, table XIII for maximum recommended reaming speeds and type of reamers being used.

4. Hole Drilling in Graphite-to-Titanium Structures

A. See Fig. 1, table VIII for drill selection, speed, feed and lubrication requirements.

B. For close tolerance holes, drill 1/32 inch undersize for 5/16 inch and over, 1/64 inch under size for under 5/16 inch, and ream to full size.

NOTE: Use Freon TB-1 for coolant. Apply with mist system for material up to one drill diameter thick. For material over one drill diameter thick, use oil-hole drills.

Hole should be started from Graphite side to minimize fraying.

CAUTION: MAINTAIN A CHIP CLEARANCE SPACE OF 3/16 TO 3/8 INCH BETWEEN THE DRILL JIG AND THE PART BEING DRILLED.

C. All holes should be piloted first, drilled and reamed to size. Refer to Fig. 1, table XIII for reaming speeds and type of reamers being used.

5. Countersinking in Graphite Structures

A. Use a 3-flute carbide insert cutter (ST 1221C-C) or a 2-flute polycrystalline cutter (ST1223C-D) for countersinking. (Fig. 2, Details I & IV).

B. Countersink at 500 RPM with carbide cutters and up to 1500 RPM with diamond cutters.

NOTE: Use of a vacuum adapted microstop as the modular suction casing as shown in Fig. 3 and 4 is recommended.

C. For taped surfaces, bond a mask pad (ST1223-DA) onto the vacuum adapted microstop. This pad must be sized as the countersink depth is set (Fig. 5).

NOTE: Each fastener size will require a separate microstop and adjustment.

D. Because of wear rate (approximately 50 holes per grind) and fastener head radius, the following techniques must be used:

(1) The countersink depth must be set with a sharp cutter.

(2) The depth should always be set in some scrap material using a fully torqued fastener from the same lot for the definition of countersink depth.

(3) For a large number of flush fasteners, have two sharp countersinks available to begin the work.

(4) After the depth control is established with both cutters, one cutter is used to produce all of the countersinks, and the other is used to follow or clean up any problems caused by the wear of the first tool.

6. Deburring of Graphite Structures

A. Use a conical abrasive tool (fine grit, closed structure, rubber bond) with a 500 RPM drill unit to remove frayed or delaminated fibers from the entrance and exit of a hole.

7. Hole Quality of Graphite Structures

A. See Fig. 6 for hole quality requirements.

8. Rough Trimming Graphite Panels

A. Rough trimming can be accomplished prior to final trimming by several methods, as discussed below. The choice of which operation is best fitted for a particular part is determined by part size, straight or curved trim, access to trim line, etc.

(1) For band sawing, scribe contoured lines on the material to be trimmed with a 0.375 inch excess allowance for final trimming.

(a) Use a coated diamond abrasive blade in the 60- to 80-mesh range or a medium grit carbide abrasive blade at 2000-4500 SFM. Feed rates of 20 inches per minute are typical on currently available bandsawing equipment.

NOTE: A backup on the exit side of graphite panel is required to prevent delamination with the unidirectional tape side facing upward.

Inclusion of dust collection provisions is recommended.

(2) For circular sawing, use an 8-10 inch diameter diamond abrasive, 40-60 grit cutter or a carbide abrasive, medium grit cutter at 3000-5000 RPM. Extend the blade height 0.25 inch above the workpiece to control out-of-plane forces from delaminating material plies.

(3) For portable circular sawing, scribe contoured lines on the material to be trimmed with a 0.25 inch excess allowance for final trimming. Use a 2.0 inch diameter diamond abrasive, 40-60 grit cutter or a carbide abrasive medium grit cutter at 7500-10,000 SFM. Use of a vacuum is recommended (Fig. 7).

9. Final Trimming Graphite Panels

A. Limit the radial depth of cut by making a roughing cut to a quarter of the cutter diameter or 0.06 inch, whichever is less, followed by a net finishing cut, to eliminate excessive delamination experienced in heavier cuts.

B. Final trimming can be accomplished after rough trimming by several methods, as discussed below. The choice of process is determined by part size, configuration of trim and part, access to trim line, etc.

(1) For spindle (Table) shaping, use a 1 inch diameter x 3/4" cut x 3/4" shank x 4" long diamond abrasive, 60-80 mesh cutter at 6000-10,000 RPM or a carbide rotary, single cut cutter at a speed of 500-1500 SFM set in a holding fixture. Feed rate depends on part thickness and range from 150 IPM for thin sections (0.040 inch) to 30 IPM for thick sections (0.750 inch). Use of a vacuum pickup is recommended.

(2) For routing, use a 0.25 inch diameter x 3/4" cut x 2-1/2" long diamond abrasive, 60-80 mesh cutter in an 18,000-25,000 RPM air motor, Dotco 10L2500C-01 with front exhaust and at feed rates from 150 IPM for thin parts to 50 IPM for thick parts or TSI-DFR dualflex router with integral vacuum pick-up, at a speed of 1200-5000 SFM. Optional to use a carbide rotary burr, single cut cutter at a speed of 500-1300 SFM. Use a hand routing fixture with a 0.062 inch setback. Use of a vacuum pickup is recommended.

(3) For trimming graphite panels for fit up, use the air motors mentioned in par. 9.B.2) and a 1/4 inch x 1 inch cut x 2 inch long carbide rotary file, single cut cutter.

10. Deburring Trimmed Graphite Panels

A. Deburr trimmed graphite panels after final trimming by the following methods:

(1) Hand sand with 150-grit, water resistant sandpaper.

(2) Use a 2-inch disk sander, 180-grit abrasive in an air motor.

(3) Belt sand with 80-grit bands and file with the direction of the strokes towards the centerline of the material. Use a Dotco 10L1280-32 with a #14-1301 sander attachment, or equivalent.

11. Hole Drilling in Aramid Structures

A. See Fig. 1, table IX for drill selection, speed, feed and lubrication requirements.

NOTE: Most structural Aramid details will have a single ply of 120 fiberglass on both sides in the area of fastener holes to avoid fraying problems when drilling and countersinking. Reference should be made to the Engineering drawing to ascertain if the fiberglass plies have been used or not.

B. The drill operation is best accomplished by placing the drill against the work without rotation, applying a steady medium force, and then operating the drill motor.

NOTE: Some trial drilling on scrap material is recommended. Improper technique can cause rejectable delamination. Use slow, controlled feed, especially when breaking through the backside of the material.

Pilot holes are not recommended. If pilot holes must be used, drill them at 5000 RPM with No. 30 or No. 40 HSS twist drills. Ream according to information provided in Fig. 1, table XIII.

C. Ensure that the drill is normal to the work surface.

NOTE: Holes in Aramid structures should not normally require reaming unless they have Fiberglass surfaces.

CAUTION: IT IS REQUIRED TO USE LIMITED-TRAVEL DRILL GUIDE FOR MANUAL DRILLING TO PREVENT FIBER BREAKOUT.

12. Hole Drilling in Aramid-to-Aluminum Structures

A. See Fig. 1, table X for drill selection, speed, feed and lubrication requirements.

NOTE: Drill holes in one operation from the pyramid side. Use a HSS double-margin stepped drill with a 135° split point (ST 10 907-A) which must be used with a limited travel drill guide. The drill guide is also useful for locating the holes by means of a strip template.

Hole diameters in aramid laminates are 0.001 to 0.003 less than cutter diameter while the holes in aluminum are 0.001 to 0.003 larger than cutter diameter. Drill to produce the required hole size in aluminum and ream the stack-up, if required, to final size.

B. If required, ream hole according to information presended in Fig. 1, table XIII.

C. Use the following methods for drilling holes in aramid panels previously located by pilot holes in aluminum:

(1) Press the aramid panel firmly against the aluminum substructure and drill hole in one operation from the aluminum side.

(2) Press the aramid panels firmly together so that they remain in contact while drilling. Pilot the aramid panel, then drill to full size from the aramid side.

(3) Ream to full size, if required, by referring to Fig. 1, table XIII.

13. Hole Drilling in Aramid-to-Titanium Structures

A. Use drills and techniques mentioned for aramid-to-aluminum combinations in par. 12.A. except drill and/or ream according to information in Fig. 1, tables XI and XIII respectively.

14. Countersinking in Aramid Structures

A. Use standard HSS countersink cutters or Polycrystalline diamond cutters for countersinking in aramid structures.

B. Countersink at 500 RPM with HSS cutters and up to 1500 RPM with diamond cutters.

NOTE: Use of a vacuum adapted microstop as shown in Fig. 3 is recommended.

C. For surfaces without fiberglass plies, bond a mask pad onto the vacuum adapter microstop. This pad must be sized as the countersink depth is set (Fig. 5).

NOTE: Each fastener size will require a separate microstop and adjustment.

15. Deburring of Aramid Structures

A. Use either an 80-grit belt sander or hand sand with a 150-grit water resistant sandpaper to remove frayed fibers from the entrance and exit of the hole.

NOTE: If outer plies of structure are fiberglass, a conical abrasive tool with a medium grit is recommended to remove fibers and fuzz.

16. Hole Quality of Aramid Structures

A. See Fig. 6 for hole quality requirements.

17. Rough Trimming Aramid Panels

A. Rough trimming aramid panels can be accomplished prior to final trimming by several methods, as discussed below. The choice of which operation is best fitted for a particular part is determined by part size, straight or curved trim, access to trim line, etc.

(1) For band sawing, scribe contoured lines on the material to be trimmed with at least 0.10 inch access allowance for final trimming.

(a) Use saw blades specified in Fig. 1, table XII depending on the type of the aramid material.

(2) For circular sawing, use a semi-HSS, alternate cutter with 10-14 teeth per inch at 12,000-15,000 RPM and with Boelube 100A lubricant. The following portable saws are recommended:

(a) Dotco Model 10L1280-32

(b) Aro Model 8825 with integral dust shroud.

NOTE: Vacuum pick-up is recommended.

(3) For saber sawing, scribe contoured lines on the material to be trimmed with 0.125 inch excess allowance for final trimming.

(a) Use a HSS blade, with 14-17 teeth per inch at 800-6500 FPM and a Bosh saber saw No. 7598, or equivalent, with Boelube 100A lubricant.

CAUTION: DUST COLLECTION EQUIPMENT MUST BE USED.

18. Final Trimming Aramid Panels

A. Limit the radial depth of cut to a quarter of the cutter diameter or 0.06 inch, whichever is less, to eliminate excessive delamination experienced in heavier cuts.

B. Final trimming can be accomplished after rough trimming by several methods, as described below.

CAUTION: USE THE CONVENTIONAL CUTTING METHOD WHEN FINAL TRIMMING ARAMID PANELS. THE CUTTER ROTATION AT THE FINISHED EDGE SHOULD BE IN THE SAME DIRECTION OF THE FEED.

(1) For hand (portable) routing, use Boeing Standard cutter (ST1435-E) or a carbide rotary diamond burr cutter at 18,000-25,000 RPM. Boelube 100A lubricant is recommended for use as well as a vacuum pickup unit.

NOTE: Placement of the cutter on the edge of the material being cut is very important. The centerline of the material edge must intersect the cutting tool where the two helical cutting edges intersect. See Fig. 8.

(2) For track routing, use a 1/4 inch diameter, 1 inch by 2-1/2 inch long diamond cut cutter in a router, Dotco (rear exhaust) 10L2502C-01 or equivalent, at 18,000 rpm and at a feed rate of 16-18 IPM with Boelube 100A lubricant.

(3) To final trim aramid panels for fit up, use a 15,000-18,000 RPM hand router with rear exhaust, DOTCO 10L2502C-01 or equivalent, with a 1/4 inch by 1 inch cut by 2 inch long double cut, medium rotary file, or disk sand using any air motor (rear exhaust preferred) use with 2 inch dia 180 grit disk sander.

19. Deburring Trimmed Aramid Panels

A. Deburr trimmed aramid panels after final trimming by the following methods:

(1) Block sand with 280/320 grit wetted with Boelube 100A lubricant.

(2) Use a 2 inch diameter 180 grit disk sander with an air motor with rear exhaust.

(3) Belt sand with a DOTCO 10L1280-32 sander and a DOTCO 14-1301 sanding attachment, or equivalent, with an 80 grit silicon carbide belt. File with the direction of each stroke towards the centerline of the material.

20. Trimming Hybrid Aramid/Graphite Panels

A. For aramid/graphite panels with more than 3 plies of graphite in the panel, use trimming methods mentioned for trimming graphite, except use 20-40 grit and mist spray with Boelube 100A.

B. For aramid/graphite panels with less than 3 plies of graphite in the panel, use trimming methods mentioned for trimming aramid.

21. Treatment of Fastener Holes in Composite Panels

A. Prime countersinks and holes with BMS 10-11 Type I or BMS 10-79 Type III. BMS 10-79 Type II is optional for graphite panels.

B. For fastener installation procedures and restrictions concerning composite panels, refer to 51-30-2.

DESCRIPTION	SPEED (RPM)	CHUCK SIZE IF APPLICABLE (INCH)	MODEL NUMBER	SUPPLIER
DRILL MOTORS (IN LINE):	330	1/2	41D-108	B
	400	1/2	15DP-4B	O
	500	3/8	6AR3	A
	650	1/4	21D-106	B
	900	1/4	21D-105	B
	900	1/4	15C1490A-38	C
	1000	1/4	3AN1	A
	1000	3/8	31DR-805	B
	2000	3/8	42DR-103	B
	2000	1/4	15C2991-38	C
	3000	1/2	15C2992-53	C
	5000	3/8	15C2993-51	C
	6000	1/4	42DR-101	B
	6000	1/4	7AH1	A
	12000	1/4	15C2982D-38	C
	18000	1/4	41D-100	B
	20000	1/4	7AD1	A
DRILL MOTORS (ANGLE HEAD):	600		15L1281B-32	C
	2100	1/4	21A-624	B
	5000	1/4	31AR-621	B

HOLE PREPARATION EQUIPMENT FOR GRAPHITE AND ARAMID STRUCTURES
TABLE I

Cutting Tools for Composite Panels
Figure 1 (Sheet 1)

135316

DESCRIPTION	TYPE	SUPPLIER
MISCELLANEOUS:	MICROSTOPS • MAGNAVON NO. 2193 [S] OR NO. 2140 [T] • ZEPHYR NO. ZT330	[L] [N]
CUTTERS:	DRILLS • ST1257B (SOLID CARBIDE) • ST10-907-H (CARBIDE TIPPED HSS TWIST) • NO. 30 OR NO. 40 HSS DRILLS FOR PILOTING	[R] [U] [V] [W] [U] [V] [W]
	COUNTERSINKS • ST1221C-C • ST10-1223 • ST1223C-D	[L] [M] [X]
	REAMERS (WITH 1/32 UNDERSIZE PILOT) • ST1864P (CARBIDE) FOR GRAPHITE OR GRAPHITE WITH ALUMINUM • SINGLE-STEP OR DOUBLE-STEP DESIGN FOR GRAPHITE WITH TITANIUM	[R] [W]
	HOLE SAWS • DIAMOND GRIT HOLE SAWS	[K] [M] [X] [Y]

HOLE PREPARATION EQUIPMENT FOR GRAPHITE STRUCTURES
TABLE II

Cutting Tools for Composite Panels
Figure 1 (Sheet 2)

135324

DESCRIPTION	TYPE	SUPPLIER
MISCELLANEOUS:	MICROSTOPS • MAGNAVON NO. 2193 [S] OR NO. 2140 [T] • ZEPHYR NO. ZT330	[L] [N]
	LIMITED TRAVEL DRILL GUIDES • SHERIDAN SP12615-4 MOTOR ADAPTER (USE SHERIDAN SP2987 WITH DOTCO) • BUSHINGS - SHERIDAN SERIES (FOR JOBBER LENGTH DRILLS) • BARREL ASSEMBLIES: NO. SP12605-2 (9/16 INCH TRAVEL) • SP127JC SERIES (FOR JOBBER LENGTHS) SP127XC SERIES (FOR 6 INCH LENGTHS)(AVAILABLE FOR DRILL DIAMETER 0.042 TO 0.316 INCH) ORDER BY SPECIFYING SERIES NUMBER, DRILL DIAMETER, 3/16 INCH PILOT LENGTH, AND 0.374 INCH PILOT DIAMETER	[G]
CUTTERS:	DRILLS • HSS TWIST DOUBLE-MARGIN STEP DRILL • BW 840 KLENK DRILL	[U] [V] [W]
	COUNTERSINKS • ST10-1223	[L] [M]
	REAMERS • B1-3079 (STRAIGHT, HSS) • B1-3085 (PILOT, HSS) • SINGLE-STEP OR DOUBLE-STEP DESIGN FOR ARAMID WITH TITANIUM	[Q] [W]
	HOLE SAWS • HSS OR CARBIDE INSERT HOLE SAWS, WITH 30° POSITIVE FACE AND 30° POSITIVE CLEARANCE CUTTING ANGLES	[K] [M] [X] [Y]

HOLE PREPARATION EQUIPMENT FOR ARAMID STRUCTURES
TABLE II

Cutting Tools for Composite Panels
Figure 1 (Sheet 3)

135318

DESCRIPTION	TYPE	SUPPLIER
DRILL MOTORS:	6000-10,000 RPM DRILL UNIT	K
	15,000-18,000 RPM DRILL UNIT DOTCO NO. 10L2580C-01 18,000-23,000 RPM DRILL UNIT DOTCO NO. 10L2580C-01	C
ROUTERS:	15,000-25,000 RPM, DUALFLEX TSI-DFR WITH INTEGRAL VACUUM SYSTEM	J
	DOTCO 10L2502C-01 HAND ROUTER DOTCO 10L2500C-01	C
SAWS:	BAND SAW - 1000-3000 SFM 2500-3500 SFM	K M Y
	CIRCULAR SAW - 3000-5000 RPM	K M Y
	PORTABLE CIRCULAR SAW - 12,000 RPM, DOTCO 10L1280-32 H OR 18,000 RPM, DOTCO 10L1281-32 I	C
	SABER SAW - 2500-3500 SFM BOSCH MODEL NO. 7598	D
CUTTERS:	DIAMOND ABRASIVE CUTTER, 40-60 GRIT 8-10 INCH DIA 2 INCH DIA 1 INCH DIA X 3/4 INCH CUT X 3/4 SHANK X 4 INCHES LONG 1/4 INCH DIA X 3/4 INCH CUT X 2-1/2 INCH LONG DIAMOND CUT, ROTARY BURR CUTTER 1/4 INCH DIA X 1 INCH CUT X 2-1/2 INCH LONG ROTARY FILE, DOUBLE CUT, MEDIUM CUTTER 1/4 INCH DIA X 1 INCH CUT X 2-1/2 INCH LONG CARBIDE ABRASIVE, MEDIUM GRIT CARBIDE, ROTARY FILE, SINGLE CUT 1/4 INCH DIA X 1 INCH CUT X 2 INCH LONG HSS BLADE, WAVY SET 14-18 TPI	K M Y
	HSS BLADE, 18-20 TPI, BOSCH T-218A	D
	ST1435-E TWO FLUTE CUTTER	E
ABRASIVES:	60 GRIT, SANDING BLOCK 80 GRIT, SILICONE CARBIDE BLOCK 150 GRIT, WATER RESISTANT SANDPAPER 180 GRIT, BELT 180 GRIT, 2-INCH DISC SANDER 280/320 GRIT SANDING BLOCK	K M Y Z
LUBRICANTS:	BOELUBE 100A	F
MISCELLANEOUS:	SANDER WITH SANDER ATTACHMENT DOTCO NO. 10L1280-32 (SANDER) DOTCO NO. 14-1301 (1/2 INCH WIDE SANDER ATTACHMENT)	C

TRIMMING EQUIPMENT FOR COMPOSITE STRUCTURES
TABLE IV

Cutting Tools for Composite Panels
Figure 1 (Sheet 4)

274572

PROPERTIES	MATERIAL			
	FIBERGLASS	GRAPHITE-EPOXY	ARAMID	HYBRID
CUTTING CHARACTERISTICS	RESIDUE IN POWDER FORM	VERY SIMILAR TO FIBERGLASS	NOT SIMILAR TO FIBERGLASS	VERY DIFFICULT TO DRILL
HOLE GENERATION	NO PROBLEM EXCEPT THAT RESIDUE MAY CAUSE SKIN IRRITATION IN SOME PEOPLE	NO PROBLEM IN CLOTH LAMINATES BREAKOUT IS A SIGNIFICANT PROBLEM IN TAPE	SIGNIFICANT PROBLEM (FUZZING, SHREDDING, BREAKOUT, DELAMINATION ARE MAJOR PROBLEMS)	PROBLEMS OCCUR EXCEPT WITH A KLENK DRY BW840
CUTTER MATERIAL	HSS OR CARBIDE	CARBIDE	HSS OR CARBIDE	HSS OR CARBIDE
CUTTER SPEED	HIGH SPEEDS ARE DESIRABLE	HIGH SPEEDS ARE DESIRABLE	TENDENCY TO HEAT UP AND CHATTER AT HIGH SPEEDS	6200 OPTIMUM SPEED
SELF FEEDING	-----	-----	TENDENCY TO SELF-FEED WITH TWIST DRILLS	

COMPARATIVE HOLE PREPARATION PROPERTIES
TABLE V

Cutting Tools for Composite Panels
Figure 1 (Sheet 5)

274579

MATERIAL	FIBERGLASS LAMINATES			GRAPHITE-EPOXY [C]		
DRILL TYPE [F]	1. ST 10-907-H [D] 2. ST 1257B [E]			1. ST 10-907-H 2. ST 1257B		
CUTTER LIFE (HOLES)	50-100			50-100		
DRILL SIZE (INCH)	MAX RPM (DRY)	MAX RPM (WET)	FEED (IPR)	MAX RPM (DRY) [A]	MAX RPM (WET) [A]	FEED (IPR) [B]
1/16 - NO. 40	6000	6000	0.005	6000	6000	0.002
0.09	6000	6000	0.005	6000	6000	0.002
0.12	6000	6000	0.005	6000	6000	0.002
5/32 - NO. 30	6000	6000	0.005	6000	6000	0.002
0.18	6000	6000	0.005	6000	6000	0.002
7/32	6000	6000	0.005	6000	6000	0.002
1/4	6000	6000	0.005	6000	6000	0.002
0.31	5000	6000	0.005	6000	6000	0.002
3/8	5000	6000	0.005	6000	5000	0.002
1/2	3000	5000	0.005	5000	3000	0.002
5/8	3000	3000	0.005	3000	3000	0.002
3/4	2000	3000	0.005	3000	2000	0.002
1	1000	3000	0.005	3000	1000	0.002

MATERIAL/RPM DRILLING FIBERGLASS AND GRAPHITE
TABLE VI

NOTES

[A] FOR DRILL SIZES BETWEEN 0.09 AND 1/4 INCH USED ON A GRAPHITE EPOXY STRUCTURE AND FOR MATERIAL STACKUPS 0.06 INCH AND THICKER, DRILLING CAN BE PERFORMED AT 18,000 RPM IF AND ONLY IF THE DRILLS BEING USED ARE JOBBER LENGTH DRILLS MEASURING 3 INCHES LONG OR LESS

[B] FEED RATE SHOWN IS FOR DRILLNG GR/EP UNIDIRECTIONAL TAPE. IT MAY BE INCREASED TO 0.004-0.005 IPR IF STURDY BACKUP IS USED, OR THE GR/EP PART HAS FABRIC CO-CURED ON DRILL EXIT SIDE

[C] VACUUM DUST COLLECTION MANDANTORY

[D] CARBIDE-TIPPED HSS TWIST DRILL

[E] 4-FLUTE, STRAIGHT SHANK CARBIDE DRILL; SEE FIG. 2, DETAIL III

[F] TO PREVENT DRILL BREAKAGE AND POSSIBLE SERIOUS INJURY, DRILLS LONGER THAN THREE INCHES MUST NOT BE USED AT SPEEDS ABOVE 6000 RPM

Cutting Tools for Composite Panels
Figure 1 (Sheet 6)

274582

MATERIAL	GRAPHITE-EPOXY AND ALUMINUM STACK [A]		
DRILL TYPE	ST10-907-H [D]		
CUTTER LIFE (HOLES)	50-100		
DRILL SIZE (INCH)	MAXIMUM RPM (DRY)	MAXIMUM RPM (WET) [B]	FEED (IPR) [C]
1/16 - NO. 40	6000		0.002
0.09	6000		0.002
0.12	5000		0.002
5/32 - NO. 30	5000		0.002
0.18	3000		0.002
7/32	3000		0.003
1/4	3000		0.004
0.31	3000		0.004
3/8	2000		0.004
1/2	1500		0.006
5/8	1250		0.006
3/4	1000		0.008
1	750		0.008

MATERIAL/RPM - DRILLING GRAPHITE AND ALUMINUM
TABLE VII

NOTES

[A] VACUUM DUST COLLECTION MANDATORY

[B] NOT APPLICABLE

[C] FEED RATE SHOWN IS FOR DRILLING GR/EP WITH CO-CURED FABRIC AND ALUMINUM ON DRILL EXIT SIDE. WHEN DRILL EXISTS THROUGH GR/EP UNI-DIRECTIONAL TAPE, REDUCE FEED RATE TO 0.002 IPR

[D] CARBIDE-TIPPED HSS TWIST DRILL

Cutting Tools for Composite Panels
Figure 1 (Sheet 7)

274587

MATERIAL	GRAPHITE-EPOXY AND TITANIUM STACK [A]		
DRILL TYPE	1. ST10-907-H [B] 2. ST7096-BG [C] [E]		
DRILL SIZE	MAXIMUM RPM (DRY)	MAXIMUM RPM (WET)	FEED (IPR) [D]
1/16 - NO. 40	850	1275	0.001
0.09		1200	0.001
0.12		800	0.001
5/32 - NO. 30	500	750	0.001
0.18		600	0.002
7/32	375	550	0.002
1/4	300	450	0.002
0.31		300	0.004
3/8	200	300	0.004
1/2	150	225	0.004
5/8	125	190	0.004
3/4	100	150	0.006
1	75	110	0.006

MATERIAL/RPM - DRILLING GRAPHITE AND TITANIUM
TABLE VIII

NOTES

[A] VACUUM DUST COLLECTION MANDATORY

[B] MAXIMUM STACKUP OF 0.18 INCH OF WHICH 0.10 INCH MAXIMUM TITANIUM DEPTH IS ALLOWED. THIS IS A CARBIDE-TIPPED HSS TWIST DRILL

[C] CARBIDE-TIPPED, OIL-HOLE DRILL WITH THREADED SHANK FOR USE IN DEEP HOLES

[D] FEED RATE SHOWN IS FOR DRILLING GR/EP WITH CO-CURED FABRIC OR TITANIUM ON DRILL EXIT SIDE

[E] CAN BE OBTAINED FROM:

ARONSON INDUSTRIAL SUPPLY
P.O. BOX 80987
5300 DENVER AVE. SO.
SEATTLE, WA 98108
(800) 824-4256
(206) 762-0700

* RECOMMENDED: GUHRING BRAND

Cutting Tools for Composite Panels
Figure 1 (Sheet 8)

275392

APPROXIMATE DRILL DIAMETER (INCH)	MAXIMUM STACK THICKNESS (INCH)	DRILL TYPE [A]	MAXIMUM SPEED (RPM)	FEED (IPR) [B]
1/16	0.25	HSS	2000	0.002
0.12 - NO. 31	0.25	HSS TWIST - DOUBLE-MARGIN OR BW 840 KLENK DRILL (PREFERRED)	6000	0.002
0.18 - NO. 15	0.375		6000	0.002
1/4	0.375		6000	0.002
5/16	0.375		6000	0.002
3/8	0.375		6000	0.002

MATERIAL/RPM - DRILLING ARAMID STRUCTURES
TABLE IX

NOTES

[A] USE BOELUBE TO PREVENT RESIN BUILDUP ON CUTTER

[B] APPLICABLE TO POWER-FEED DRILLING ONLY

Cutting Tools for Composite Panels
Figure 1 (Sheet 9)

275394

APPROXIMATE DRILL DIAMETER (INCH)	MAXIMUM STACK THICKNESS (INCH)	DRILL TYPE [A]	MAXIMUM SPEED (RPM)	FEED (IPR) [B]
1/16	0.25	HSS - TWIST	4500	0.002
0.12 - NO. 31	0.25	HSS - TWIST - DOUBLE-MARGIN, STEP	3000	0.002
0.18 - NO. 15	0.375		2000	0.002
1/4	0.375		1500	0.003
5/16	0.375		1200	0.004
3/8	0.375		1000	0.004

MATERIAL/RPM - DRILLING ARAMID AND ALUMINUM
TABLE X

NOTES

[A] USE BOELUBE TO PREVENT RESIN BUILDUP ON CUTTER

[B] APPLICABLE TO POWER-FEED DRILLING ONLY

Cutting Tools for Composite Panels
Figure 1 (Sheet 10)

275395

APPROXIMATE DRILL DIAMETER (INCH)	MAXIMUM STACK THICKNESS (INCH)	DRILL TYPE [A]	MAXIMUM SPEED (RPM)	FEED (IPR) [B]
1/16	0.25	HSS - TWIST	1200	0.002
0.12 - NO. 31	0.25	HSS - TWIST - DOUBLE-MARGIN, STEP	750	0.002
0.18 - NO. 15	0.375		500	0.002
1/4	0.375		375	0.003
5/16	0.375		300	0.004
3/8	0.375		250	0.004

MATERIAL/RPM - DRILLING ARAMID AND TITANIUM
TABLE XI

NOTES

[A] USE BOELUBE TO PREVENT RESIN BUILDUP ON CUTTER

[B] APPLICABLE TO POWER-FEED DRILLING ONLY

Cutting Tools for Composite Panels
Figure 1 (Sheet 11)

275397

ARAMID	SAW BLADE	
	TYPE	SPEED (SFM)
STRUCTURAL	1. HSS ALTERNATE SET 14-17 TEETH/INCH 2. HARD-BACK 14-17 TEETH/INCH	4000 TO 7000
NON-STRUCTURAL	SANDVIK FLEX-BACK 14-17 TEETH/ INCH 1/2 INCH WIDE	4000 TO 7000

SAW BLADES FOR USE IN ROUGH TRIMMING OF ARAMID STRUCTURES
TABLE XII

Cutting Tools for Composite Panels
Figure 1 (Sheet 12)

275398

REAMER SIZE (INCH) [F]	GRAPHITE OR ARAMID			WITH ALUMINUM			WITH TITANIUM		
	SPEED (RPM) [A]	FEED (IPR) [B]	REAMER TYPE	SPEED (RPM) [A]	FEED (IPR) [B]	REAMER TYPE	SPEED (RPM) [A]	FEED (IPR) [B]	REAMER TYPE
1/8	2000	0.002	[C] [D]	800	0.003	[C] [D]	500	0.002	[E]
3/16	2000	0.002		800	0.003		400	0.002	
1/4	1500	0.002		700	0.004		300	0.004	
3/8	1500	0.002		700	0.006		200	0.006	
1/2	1000	0.002		600	0.006		130	0.006	
5/8	1000	0.002		600	0.008		100	0.008	

REAMING COMPOSITES AND COMPOSITES WITH METAL
TABLE XIII

NOTES

[A] MAXIMUM SPEED OF 700 RPM WHEN REAMING ARAMID MATERIALS

[B] APPLICABLE TO POWER-FEED EQUIPMENT ONLY

[C] ST1864P (CARBIDE) FOR GRAPHITE OR GRAPHITE WITH ALUMINUM

[D] B1-3079 (STRAIGHT, HSS) OR B1-3085 (PILOT, HSS); BOTH REAMERS ARE USED ON ARAMID OR ARAMID WITH ALUMINUM STRUCTURES

[E] SINGLE-STEP OR DOUBLE-STEP DESIGN FOR GRAPHITE OR ARAMID WITH TITANIUM

[F] A MINIMUM CUT OF 1/64 INCH ON THE DIAMETER IS REQUIRED WHEN REAMING HOLES UP TO 5/16-INCH DIAMETER, FOR LARGER HOLES, A MINIMUM CUT OF 1/32-INCH ON THE DIAMETER IS REQUIRED

Cutting Tools for Composite Panels
Figure 1 (Sheet 13)

275401

NOTES

[A] INGERSOLL-RAND COMPANY
6231 N.E. 129TH
KIRKLAND, WA 98033
(206) 823-2999
OR
INGERSOLL-RAND COMPANY
POWER TOOL DIVISION
P.O. BOX 1776
LIBERTY CORNER, NJ 07938
(201) 647-6000

[B] ROCKWELL INDUSTRIAL TOOLS
US HWY #1 NORTH
P.O. BOX 1765
COLUMBIA, SC 29202
(800) 845-5629
OR
E.A. SELZER & ASSOCIATES
15086 N.E. 40TH ST.
REDMOND, WA 98052
(206) 881-5596

[C] DOTCO/COOPER AIR TOOLS
RT 18E
P.O. BOX 182
HICKSVILLE, OHIO 43526
OR
[L], [P]

[D] ROBERT BOSCH CORP.
2800 - S. 25TH AVE.
BROADVIEW, IL 60153

[E] ULTRA-TOOL INTERNATIONAL, INC.
5451 McFADDON AVENUE
HUNTINGTON BEACH, CALIFORNIA 92649

[F] THE ORELUBE CORPORATION
201 EAST BETHPAGE ROAD
PLAINVIEW, NEW YORK 11803

[G] SHERIDAN PRODUCTS
1054 E. HYDE PARK BLVD
INGLEWOOD, CALIFORNIA 98302

[H] FOR TRIMMING ARAMID

[I] FOR TRIMMING GRAPHITE

[J] J.P. TOOLING SERVICES
1128 INDUSTRY DRIVE
#38 BUILDING
TUKWILA, WA 98188

[K] ANY SOURCE

[L] PACIFIC DISTRIBUTING, INC.
7118 BEACON AVE. SOUTH
SEATTLE, WA 98108
(206) 772-2610

[M] ARONSON INDUSTRIAL SUPPLY
P.O. BOX 80987
5300 DENVER AVE. SOUTH
SEATTLE, WA 98108
(206) 762-0700
(800) 824-4256

[N] ZEPHYR
981 INDUSTRY ROAD
SUITE NO. 31
SEATTLE, WA 98118

[O] DRESSER INDUSTRIES
INDUSTRIAL TOOL DIVISION
1136 INDUSTRY DR.
SEATTLE, WA 98188
(206) 451-2365

[P] COOPER INDUSTRIES
7500 212TH S.W., SUITE #205
EDMONDS, WA 98020
(206) 775-4474

[Q] ALVORD-POLK
P.O. BOX 97
MILLERSBURG, PA 17061
(800) 441-2751

[R] CLARK & CLARK
P.O. BOX 17449
TUCSON, AZ 85731
(800) 654-7337

[S] FOR COUNTERSINKING ON STRUCTURE ONLY

[T] FOR COUNTERSINKING ON EXTERIOR SKINS

[U] PRECISION TWIST DRILL
C/O A. J. HANSON CO.
203 SO. ORCAS
SEATTLE, WA 98108
(800) 342-6766
(206) 763-8550

[V] MOHAWK TOOLS CO.
C/O A. J. HANSON CO.
203 SO. ORCAS
SEATTLE, WA 98108
(800) 342-6766
(206) 763-8550

Cutting Tools for Composite Panels
Figure 1 (Sheet 14)

135326

NOTES (CONT)

[W] CLEVELAND TWIST DRILL CO.
1242 E. 49TH ST.
P.O. BOX 91839
CLEVELAND, OHIO 44101
(216) 431-5050

[X] ATI INDUSTRIES
220 N. TULIP
ESCONDITO, CA 92025
(619) 746-8301
OR
[L]

[Y] GENERAL TOOL AND SUPPLY CO.
P.O. BOX 80904
SEATTLE, WA 98108
(800) 521-0714 EXT 416
(206) 762-1500

[Z] SANDING ABRASIVE
19015 PARTHENIA ST.
NORTHRIDGE, CA 91324
(213) 873-2424

Cutting Tools for Composite Panels
Figure 1 (Sheet 15)

275408

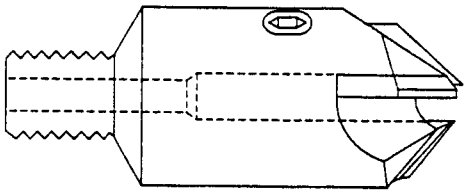

ST1221C-C-X-X

- DIA IN 16THS
- COUNTERSINK ANGLE (°)
- VARIATION (CARBIDE)
- SERIES
- BASIC TOOL NO.

ST1221C-C [A] CUTTER - MICROSTOP, C'SINK 3-FLUTE-CARBIDE
DETAIL I

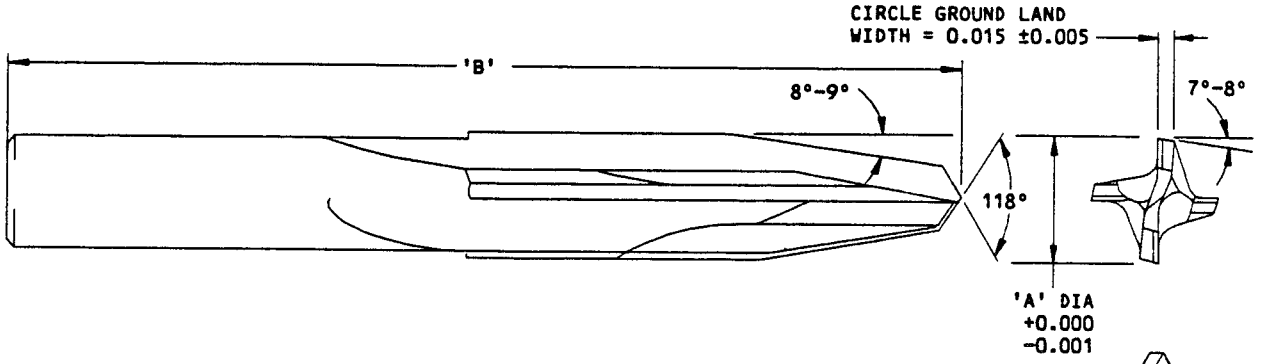

DRILL MAY BE ORDERED BY THE FOLLOWING CODE
ST1257B-XXX-XX-X

- BASIC TOOL NO.
- 'A' DIA IN 1/1000THS
- 'B' OVERALL LENGHT IN 1/100THS
- -1 = WITHOUT QUICK CHANGE ADAPTER
- -2 = WITH ST10-1365A QUICK CHANGE ADAPTER
- -3 = WITH ST10-1365B QUICK CHANGE ADAPTER

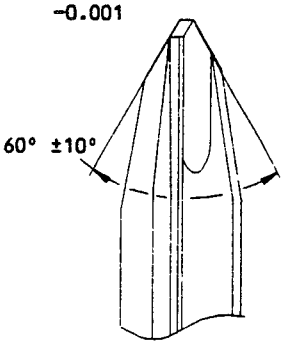

ST1257B [A] 4-FLUTE, STRAIGHT SHANK, R.H. DRILL
DETAIL II

Cutters for Hole Drilling in Graphite and Aramid Structures
Figure 2 (Sheet 1)

135319

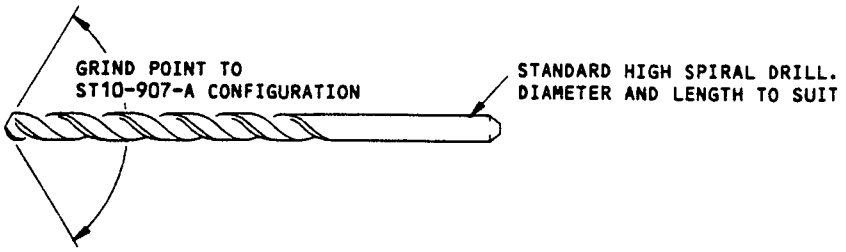

ST10-907-H [A] HIGH SPIRAL DRILL, 135° SPLIT POINT
DETAIL III

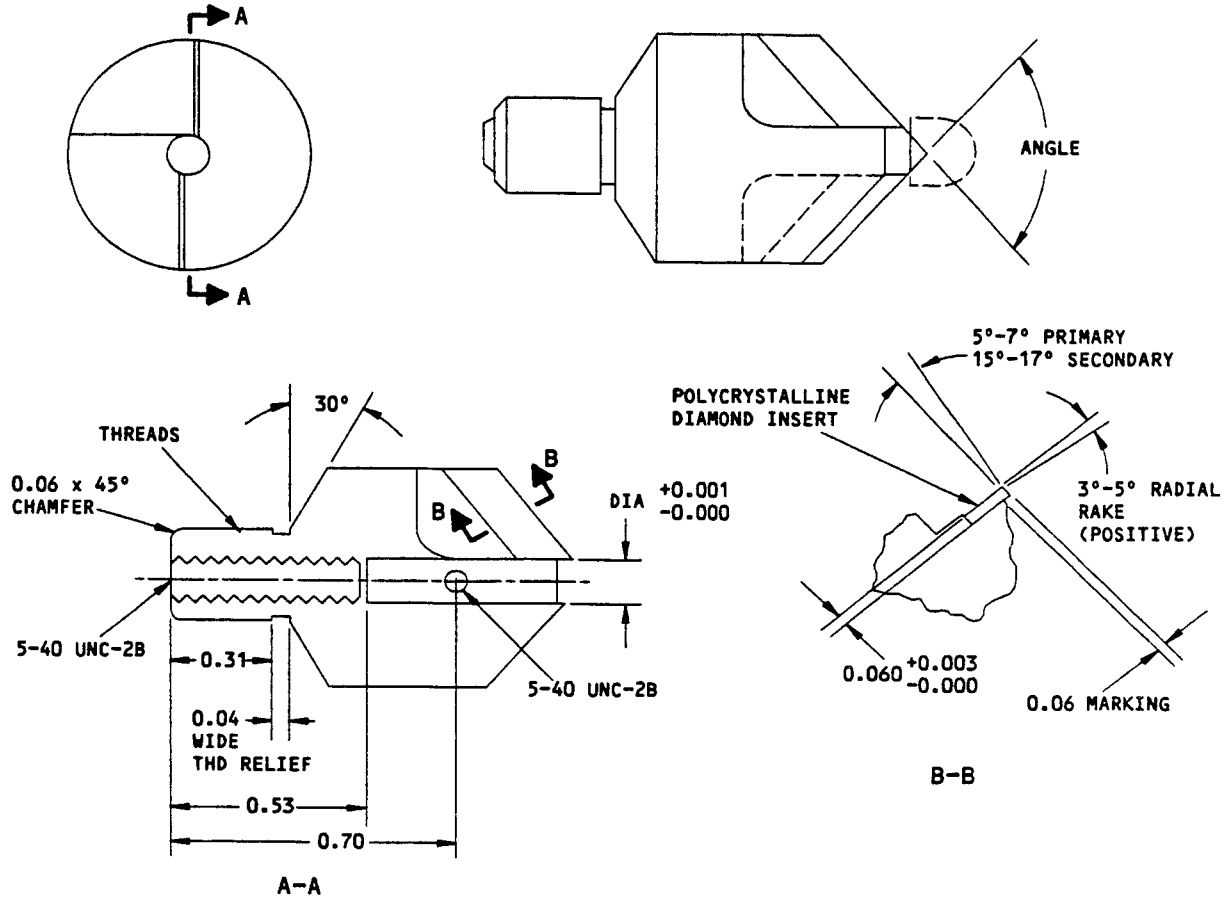

ST1223C-D [A] CUTTER - 2-FLUTE, POLYCRYSTALLINE DIAMOND
DETAIL IV

NOTES

[A] BOEING STANDARD TOOL NUMBER

Cutters for Hole Drilling in Graphite and Aramid Structures
Figure 2 (Sheet 2)

275575

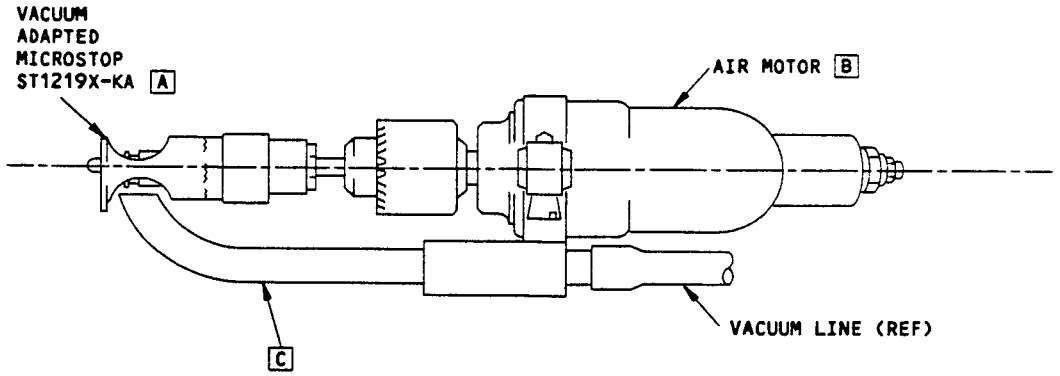

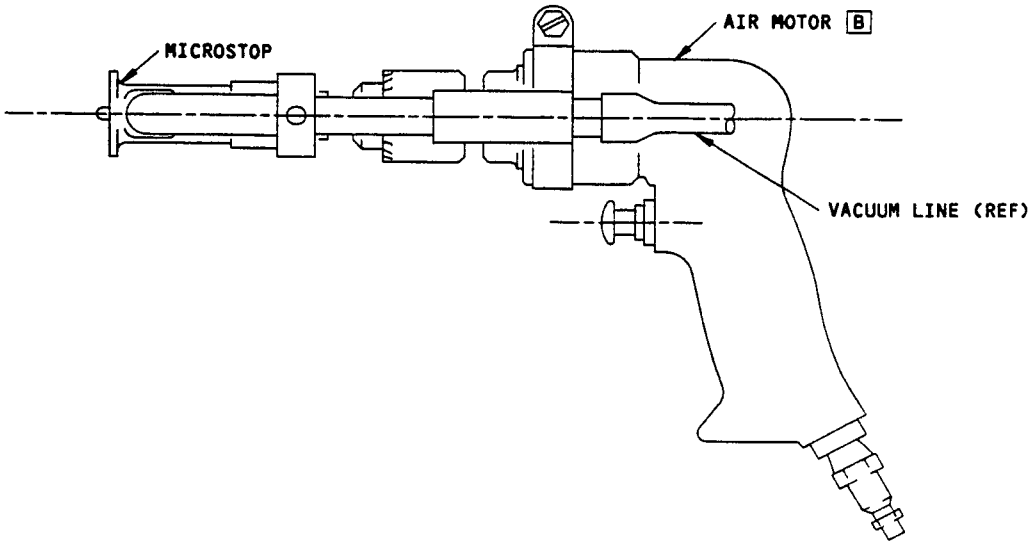

NOTES

A BOEING STANDARD TOOL NUMBER

B 5000 RPM AIR MOTOR

C STAINLESS STEEL TUBING
1/2 O.D. X 0.035 WALL X 7 1/2
SOURCE: KILSBY ROBERTS CO.
22011 76TH AVE SO.
KENT, WA 98032
(800) 562-5311
(206) 872-0100

Microstop/Vacuum Foot Setup for Countersinking Graphite and Aramid Structures
Figure 3 (Sheet 1)

135327

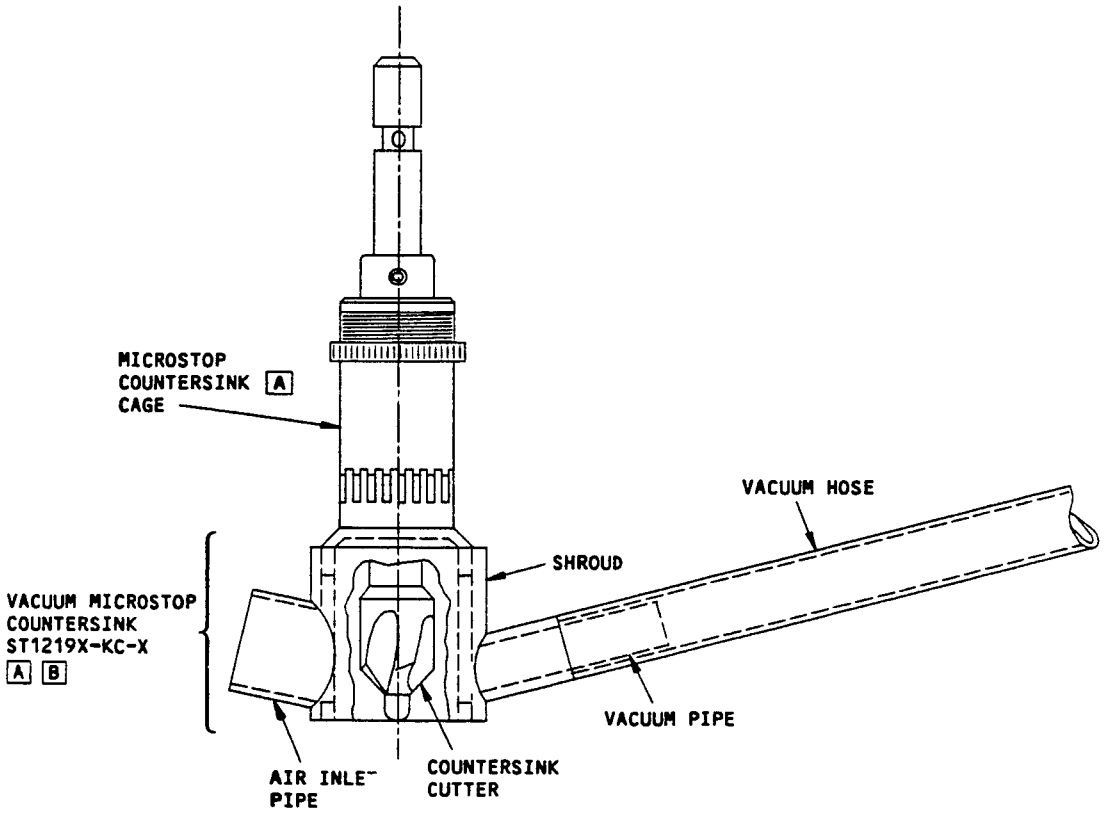

NOTES

[A] BOEING STANDARD TOOL NUMBER

[B] USE ST1219X-KC-13 WITH MAGNAVON
NO. 2140 MICROSTOP COUNTERSINK CAGE
OR ST1219X-KC-14 WITH MAGNAVON
NO. 2193 MICROSTOP COUNTERSINK CAGE

Microstop/Vacuum Foot Setup for Countersinking Graphite and Aramid Structures
Figure 3 (Sheet 2)

276482

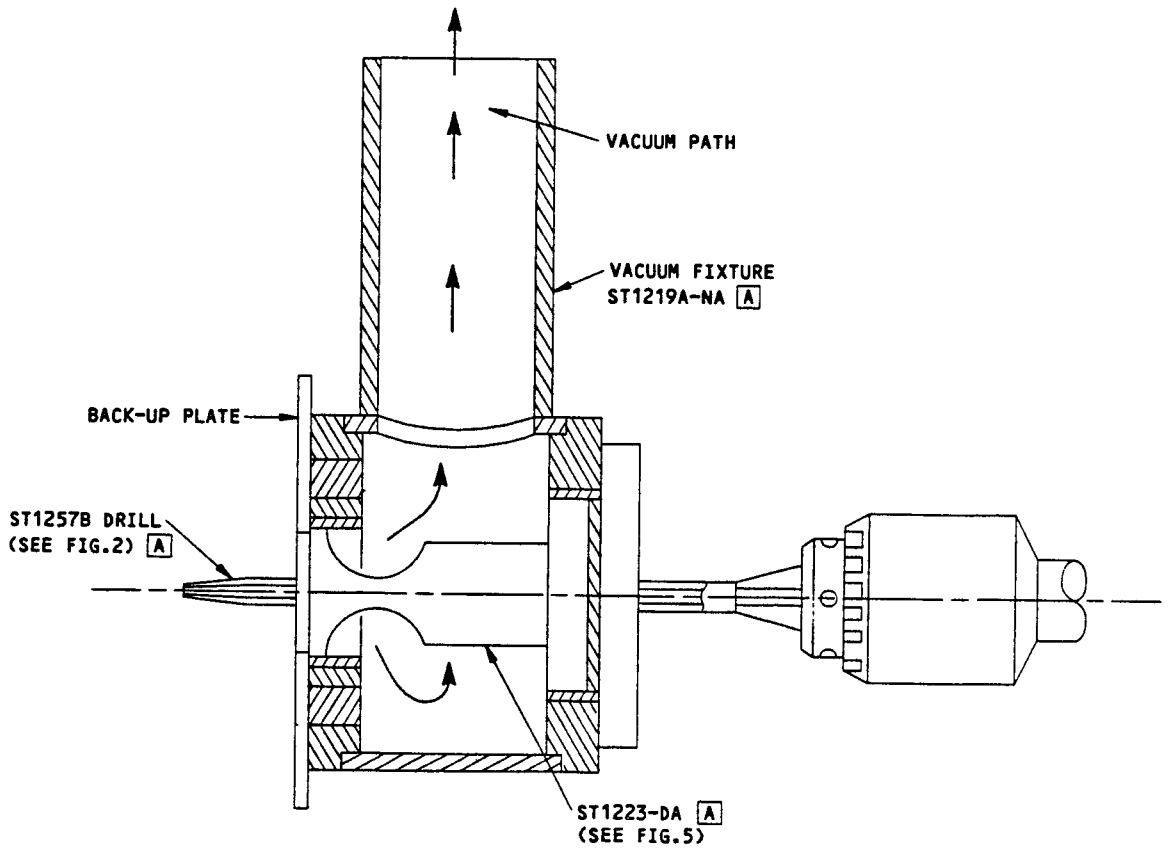

NOTES

A BOEING STANDARD TOOL NO.

Locator/Vacuum Shroud Setup for Countersinking Graphite Structures
Figure 4

135320

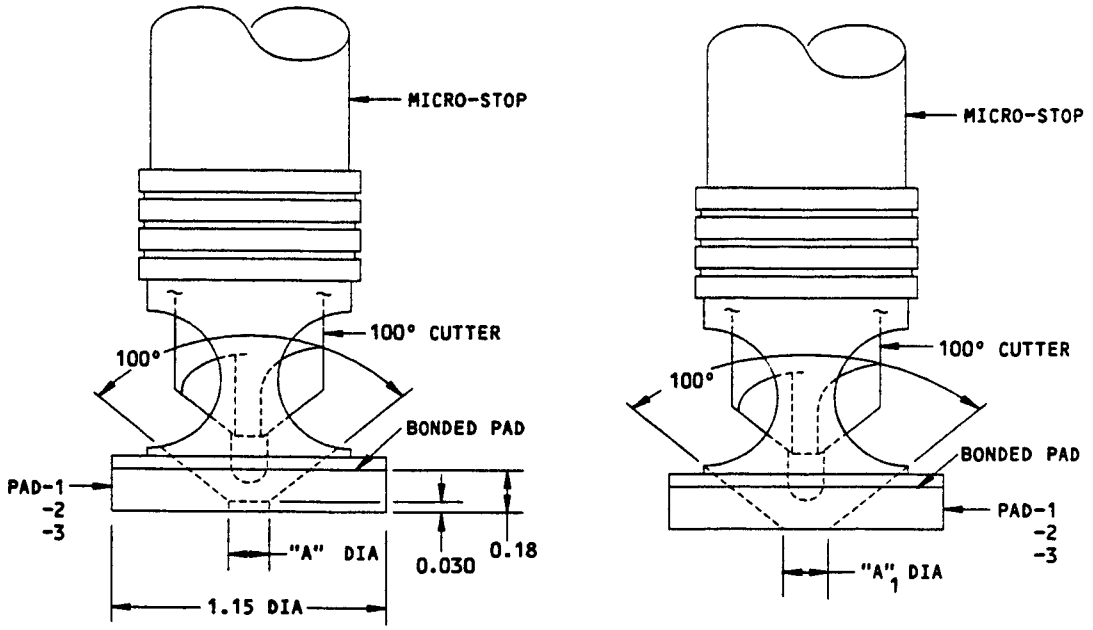

ST1223DA B

TOOL NUMBER B	PAD ITEM NO.	A_1 +0.005 -0.000 DIA 1ST OPERATION	A_1 +0.010 -0.000 DIA ESTABLISHED SURFACE FLUSHNESS 2ND OPERATION
ST1223DA-156	-1	0.156	0.156
ST1223DA-187	-2	0.187	0.187
ST1223DA-250	-3	0.250	0.250

DIAMETERS FOR ST1223DA FOOT - PHENOLIC MICROSTOP COUNTERSINK
TABLE I

NOTES

A AFTER PHENOLIC PAD IS BONDED, ADJUST CUTTER TO OBTAIN A_1 DIA AS SHOWN

B BOEING STANDARD TOOL NUMBER

Foot - Phenolic Microstop Countersink
Figure 5

135329

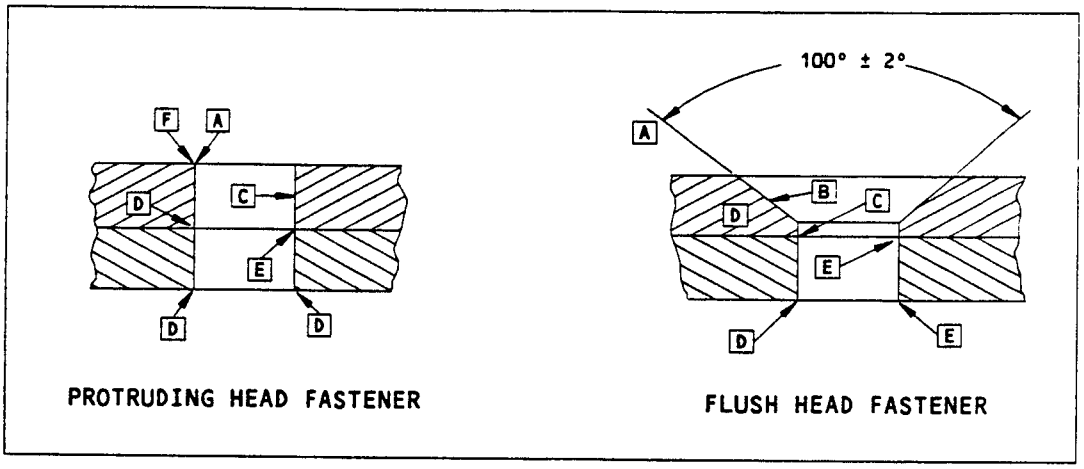

HOLE REQUIREMENTS
TABLE I

NOTES

A THERE SHALL BE NO DELAMINATION TO THE EXTERNAL PLY

B COUNTERSINKS SHALL BE CCONCENTRIC TO THE HOLE WITHIN 0.003 INCH. COUNTERSINK AXIS SHALL BE PARALLEL TO THE HOLE WITHIN 1°

C THERE SHALL BE NO EVIDENCE OF DELAMINATION OR MATERIAL SCORCHING ON THE SURFACE OF THE HOLE OR COUNTERSINK EXCEPT AS INDICATED BY F . SURFACE FINISH SHALL BE 125 MICRO-INCHES MAXIMUM

D BURRS, DUST, OR FIBER PARTICLES WHICH PREVENT SEATING OF THE FASTENER OR INTIMATE CONTACT OF STRUCTURE MUST BE REMOVED

E BREAKOUT DAMAGE SHALL NOT EXCEED LIMITS SHOWN IN TABLE II. BREAKOUT DAMAGE IS DEFINED TO BE CHIPPING, SPLINTERING, OR DELAMINATION

F BREAKOUT OR CHIPPING OF THE EXTERNAL PLY SHALL NOT EXCEED 0.030 INCH FROM THE EDGE OF THE DRILLED HOLES. WHERE THE EXTERNAL PLIES ARE UNIDIRECTIONAL GRAPHITE/EPOXY TAPE, THE BREAKOUT ALLOWANCE IS 0.100 INCH FROM THE EDGE OF THE DRILLED HOLES

Hole Requirements for Graphite and Aramid Structures
Figure 6 (Sheet 1)

135314

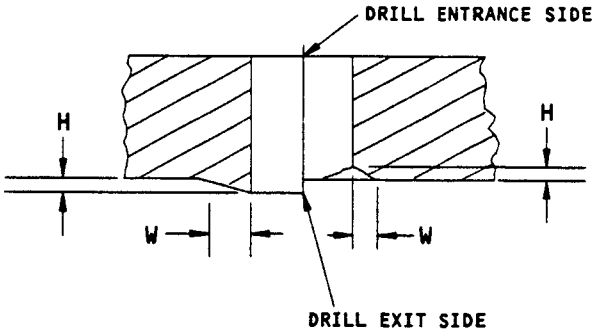

SIZE (inches)	GRAPHITE/EPOXY FABRIC BMS 8-168, BMS 8-212		GRAPHITE/EPOXY TAPE BMS 8-168, BMS 8-212		ARAMID 250°F (121°C) CURE AND FIBERGLASS BMS 8-79, BMS 8-139, BMS 8-219		ARAMID 350°F (177°C) CURE BMS 8-218	
	H MAX (inches)	W MAX (inches)	H MAX (inches)	W MAX (inches)	H MAX (inches)	W MAX (inches)	H MAX (inches)	W MAX (inches)
3/32	0.007	0.015	0.014	0.050	0.010	0.015	0.014	0.075
1/8	↓	0.020	↓	0.050	↓	0.020	↓	0.075
9/64	↓	0.025	↓	0.075	↓	0.025	↓	0.075
5/32	↓	0.030	↓	0.100	↓	0.030	↓	0.100
3/16	↓	0.030	↓	0.100	↓	0.030	↓	0.100
1/4	↓	0.040	↓	0.100	↓	0.040	↓	0.100
5/16	↓	0.040	↓	0.120	↓	0.040	↓	0.100
3/8	↓	0.040	↓	0.120	↓	0.040	↓	0.100
7/16	↓	0.040	↓	0.150	↓	0.040	↓	0.100
1/2	↓	0.040	↓	0.150	↓	0.040	↓	0.100

LIMITS FOR DRILL BREAKOUT DAMAGE TO FASTENER HOLES
TABLE II

Hole Requirements for Graphite and Aramid Structures
Figure 6 (Sheet 2)

135332

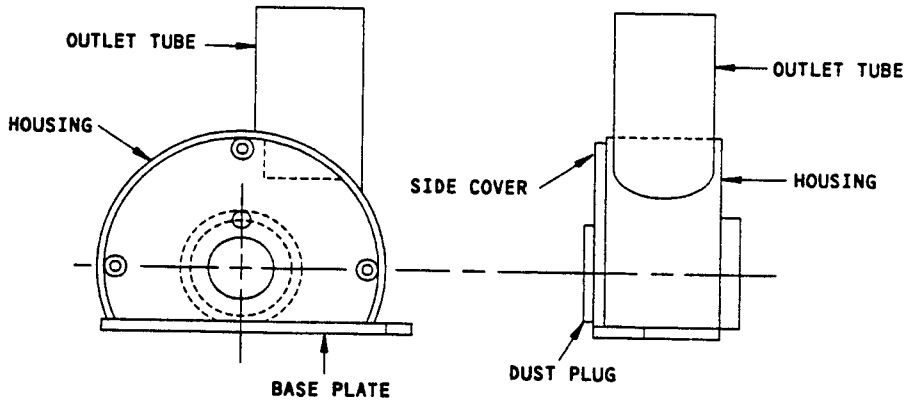

ST1265H [A] VACUUM GUARD FOR DOTCO CIRCULAR SAW MODEL 10L1280-32
DETAIL I

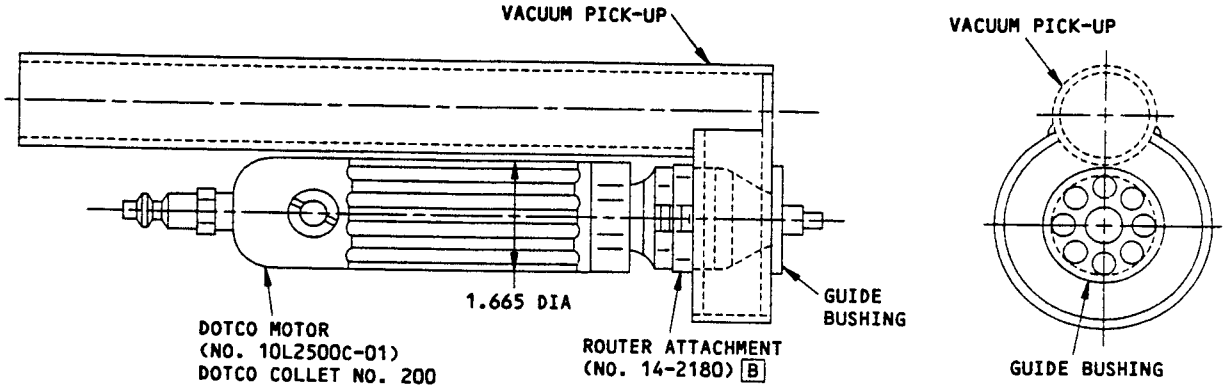

ST-301-J-15 [A] VACUUM PICK-UP FOR DOTCO ROUTER
DETAIL II

NOTES

[A] BOEING STANDARD TOOL NO.

[B] PACIFIC DISTRIBUTING INC.
7118 BEACON AVE SO.
SEATTLE, WA 98108

Vacuum Pickup for Trimming Operations
Figure 7

135322

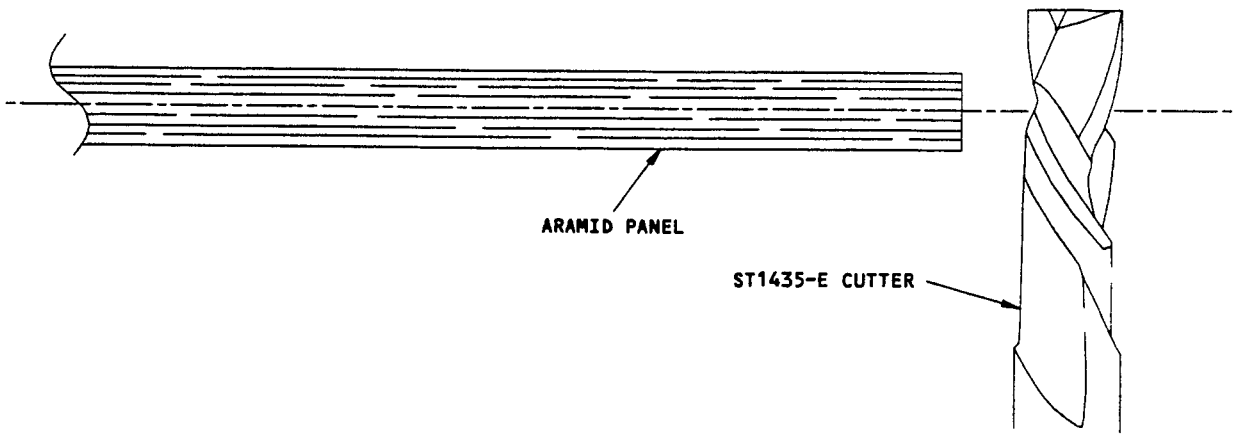

Cutter for Trimming Aramid Panels
Figure 8

135333

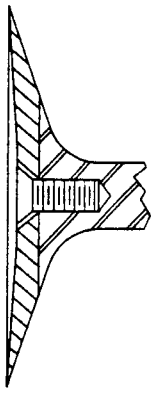

TWO-PIECE CUTTER

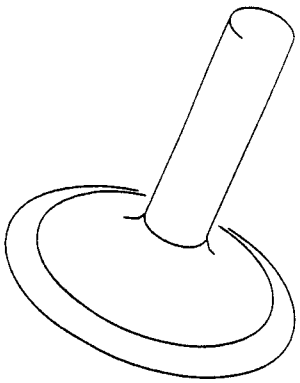

ONE-PIECE CUTTER

VALVE STEM CUTTERS
DETAIL I

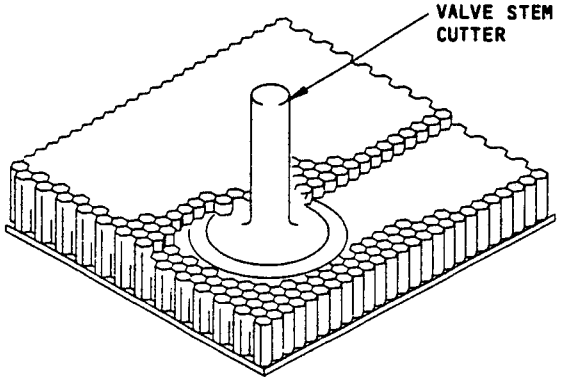

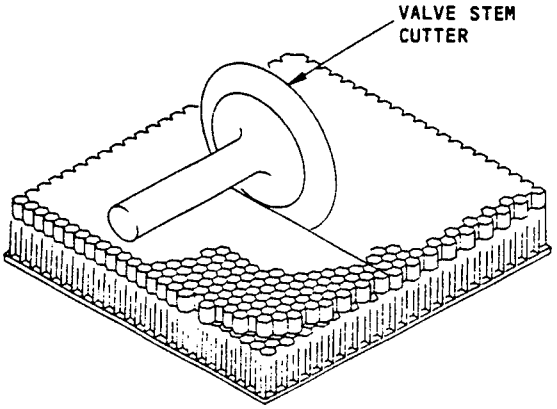

FLAT CUTTING FOR DOUBLER RECESSES, EDGE STEPS
OR OVERALL THICKNESS REDUCTION

DETAIL II

Machining with Valve Stem Cutter
Figure 9 (Sheet 1)

233618

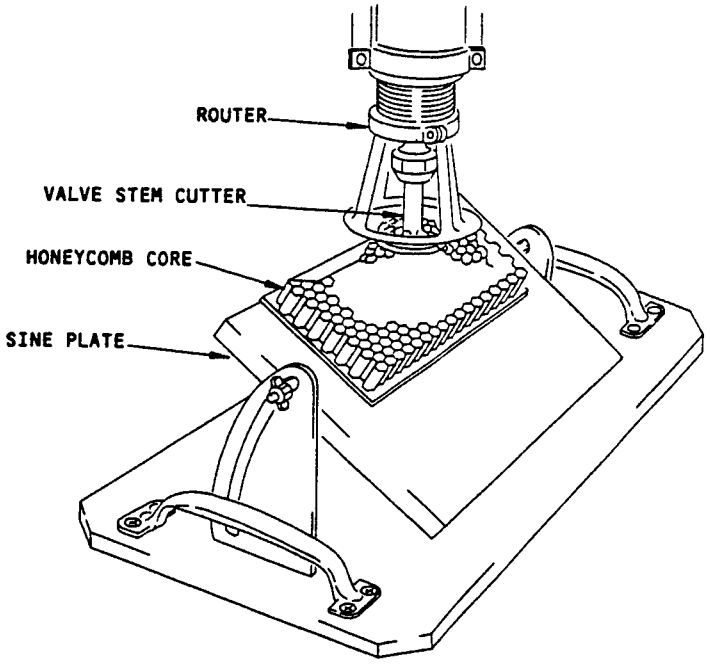

DETAIL III

NOTES

- SEE FIG. 1 FOR CUTTER SIZES AND MANUFACTURER
- CUTTERS ATTACH TO POWER ROUTER (SEE DETAIL III)
- MACHINE WITH SINE PLATE FOR MAKING TAPERED CUTS OR WEDGE-SHAPED DETAILS
- NONMETALLIC HONEYCOMB MAY BE STABILIZED BY:
  1. USE OF DOUBLE-BACKED TAPE
  2. BONDING A LAYER OF ADHESIVE FILM TO SURFACE OF HONEYCOMB
  3. BONDING A LAYER OF ADHESIVE FILM AND A LAYER OF PREPREG FIBERGLASS CLOTH
- STABILIZED HONEYCOMB DETAILS MAY BE HELD FOR MACHINING BY USE OF VACUUM, MECHANICAL CLAMPING USING LARGE AREA PADS, DOUBLE-BACKED TAPE OR SHOT BAGS

Machining with Valve Stem Cutter
Figure 9 (Sheet 2)

233620

SHOT PEENING

1. Introduction

A. This section gives the data which describes the shot peening of reworked aluminum, titanium, and steel structures. Figure 1 shows the data in chart form, the minimum part thicknesses, shot intensities, and shot numbers.

2. General

A. As the part thickness decreases because of the damage removal, the shot peening intensity may also decrease. Therefore, it is important that you find out what the part thickness is to be after rework so that you can choose the correct shot intensity.

B. Do not shot peen any parts that are thinner than the minimum thicknesses shown in Figure 1, Table 1. Do not shot peen a tapered part past the point where the minimum thickness is obtained.

C. Refer to Standard Overhaul Practices (Boeing Document D6-51702), 20-10-03, for shot peening procedures and further data.

SHOT PEENING PARAMETERS			
MATERIAL/HEAT TREAT	MINIMUM THICKNESS	INTENSITY	SHOT NUMBER
STEEL HEAT-TREATED LEASS THAN 150 KSI	0.04	0.002A-0.004A	230-780
	0.05	0.002A-0.005A	230-780
	0.07	0.003A-0.005A	230-780
	0.08	0.004A-0.007A	230-780
	0.10	0.006A	230-780
	0.12	0.008A	230-780
	0.15	0.010A	230-780
	0.17	0.012A	230-780
	0.20	0.014A	230-780
	0.240 AND THICKER	0.016A	230-780
STEEL HEAT-TREATED BETWEEN 150 AND 240 KSI	0.01	0.002A-0.004A	170-460
	0.05	0.003A-0.005A	170-460
	0.07	0.003A-0.006A	170-460
	0.08	0.006A	170-460
	0.10	0.008A	170-460
	0.12	0.010A	170-460
	0.14	0.012A	170-460
	0.16	0.014A	170-460
	0.200 AND THICKER	0.016A	170-460
STEEL HEAT-TREATED BETWEEN 270 AND 300 KSI	0.03	0.002A-0.004A	170-460
	0.04	0.003A-0.005A	170-460
	0.05	0.006A	170-460
	0.06	0.008A	170-460
	0.08	0.010A	170-460
	0.10	0.012A	170-460
	0.12	0.014A	170-460
	0.150 AND THICKER	0.016A	170-460
ALUMINUM	0.05	0.002A-0.004A	230-550
	0.06	0.003A-0.005A	230-550
	0.08	0.004A-0.007A	230-550
	0.10	0.006A	230-550
	0.13	0.008A	230-550
	0.16	0.010A	230-550
	0.19	0.012A	230-550
	0.230 AND THICKER	0.014A	230-550
TITANIUM	0.04	0.002A-0.004A	230-460
	0.05	0.002A-0.005A	230-460
	0.07	0.003A-0.006A	230-460
	0.08	0.004A-0.007A	230-460
	0.10	0.006A	230-460
	0.12	0.008A	230-460
	0.15	0.010A	230-460
	0.17	0.012A	230-460
	0.20	0.014A	230-460
	0.24	0.016A	230-460

SHOT PEENING PARAMETERS

FREEZE PLUG INSTALLATION

1. General

A. A freeze plug is a structural repair that can be used to repair aluminum structure. Because the freeze plug is installed with interference in a hole it will transmit compressive loads. A freeze plug is better for durability than a non-interference plug or an open hole.

NOTE: This procedure outlines the installation of aluminum freeze plugs. Installation of freeze plugs at specific locations will require a structural engineering review.

To use freeze plugs, the thickness of the material to be repaired must be a minimum of 0.063 inch.

B. This repair will not have an effect on a structurally significant item (SSI) given in SRM 51-00-4, Figure 3. Thus, no change to the supplement (SSID) inspection program is necessary.

C. It is best to have parts on each side of the freeze plug to contain it. Refer to Figure 1, Detail I. When the freeze plug cannot be contained between two other parts, use straps, washers, or countersinks. Refer to Figure 1, Detail II. Install the washers and straps with BMS 5-95 sealant between the mating surfaces. Refer to 51-20-4. If more than one structural member is damaged, a separate freeze plug must be used in each part. Refer to Figure 1, Detail III. Shims can be used temporarily between the structural members to make sure the freeze plugs are installed flush. Remove those shims after the freeze plug is installed. Skin and hot bonded doublers can be plugged together if there is no delamination. Refer to Figure 1, Detail IV.

NOTE: To define the edge margin and the diameter of the freeze plug installation, use the diameter of the freeze plug hole and not the diameter of the fastener hole through the freeze plug.

BOEING PROPRIETARY - Copyright © - Unpublished Work - See title page for details.

2. Freeze Plug Installation

A. Straight Shank Freeze Plug Installation

(1) Use the smallest diameter drill and reamer possible to remove the damage. Refer to 51-10-1. Remove the nicks, scratches, burrs, and sharp edges from the freeze plug hole. Make sure the freeze plug will have a minimum 0.05 inch wall thickness when the fastener hole is drilled through it. Refer to Figure 2, Detail I. Measure the diameter of the freeze plug hole to 4 decimal positions (.XXXX). The cylindricity tolerance on the freeze plug hole is 0.0003 inch. Refer to Figure 3 for the definition of cylindricity. The surface finish of the freeze plug hole must be 63 microinches Ra or smoother. Measure the thickness of the damaged aluminum structure to 3 decimal positions (.XXX). Refer to Figure 2, Section A-A.

(2) The freeze plug shank diameter must be 1.0035 to 1.0040 times larger than the diameter of the hole. For example, if the hole has a diameter of 0.4500 inch, then the freeze plug diameter must be 0.4516/0.4518 inch. Make the straight shank freeze plug from 7075-T6 aluminum with a cylindricity tolerance of 0.0002 inch. Machine the freeze plug outer diameter to a surface finish of 63 microinches Ra or smoother. Measure the final outer diameter of the freeze plug to 4 decimal positions (.XXXX). Apply a chemical conversion coating to the freeze plug. Refer to 51-10-2.

(3) For freeze plugs in more than one structural member, chamfer the mating edges of the freeze plug 45° x 0.003/0.006 inch. Refer to Figure 4, Detail I.

(4) The thickness of the freeze plug must be the same or larger than the material thickness that is measured. Drill a pilot hole through the center of the freeze plug, if a fastener will be installed.

WARNING: LIQUID NITROGEN IS APPROXIMATELY MINUS 320°F (MINUS 196°C). WEAR PROTECTIVE CLOTHING, AND USE IN A WELL-VENTILATED AREA TO PREVENT INJURY.

2. A. (5) Put the freeze plug in liquid nitrogen for a minimum of ten minutes immediately before installation. In thick structure, apply BMS 5-95 sealant to the edges of the hole to help the installation of the freeze plug. Install the freeze plug flush to +0.003/-0.000 inch. Microshave the freeze plug if necessary. Refer to 51-70.

(6) For freeze plug in more than one structural member the freeze plug mating surface must be 0.003 inch or less above or below the structure mating surface. Refer to Figure 4, Detail I.

(7) Drill the fastener hole through the freeze plug pilot hole and the structure that is attached. Make sure the freeze plug has a minimum wall thickness of 0.05 inch. Refer to Figure 2, Detail I. Apply a finish to the bare surfaces of the freeze plug that is the same as the finish on the adjacent structure. Refer to 51-10-2. Install a fastener through the freeze plug and the structure that is attached.

B. Countersunk Freeze Plug Installation

CAUTION: COUNTERSUNK FREEZE PLUGS MAY BE UNACCEPTABLE IN CERTAIN SITUATIONS.

(1) Use the smallest diameter drill and reamer possible to remove the damage. Refer to 51-10-1. Remove the nicks, scratches, burrs, and sharp edges from the freeze plug hole. Make sure the freeze plug will have a minimum 0.05 inch wall thickness when the fastener hole is drilled through it. Refer to Figure 5, Section A-A. Measure the diameter of the freeze plug hole to 4 decimal positions (.XXXX). The cylindricity tolerance on the freeze plug hole is 0.0003 inch. Refer to Figure 3 for the definition of cylindricity. The surface finish of the freeze plug hole must be 63 microinches Ra or smoother. Measure the thickness of the damaged aluminum structure to 3 decimal positions (.XXX). Refer to Figure 5, Section A-A.

2. B. (2) The freeze plug shank diameter must be 1.0035 to 1.0040 times larger than the diameter of the hole. For example, if the hole has a diameter of 0.4500 inch, then the freeze plug diameter must be 0.4516/0.4518 inch. Make the countersunk freeze plug from 7075-T6 aluminum with a cylindricity tolerance of 0.0002 inch. Machine the freeze plug to the countersink diameter given in Figure 6. The freeze plug must have a 100° countersink. Machine the freeze plug outer diameter to a surface finish of 63 microinches Ra or smoother. Measure the final shank diameter of the freeze plug to 4 decimal positions (.XXXX). Apply a chemical conversion coating to the freeze plug. Refer to 51-10-2.

NOTE: The countersink depth of the freeze plug must not be larger than 50 percent of the aluminum structure thickness.

(3) For freeze plugs in more than one structural member, chamfer the mating edges of the freeze plug 45° x 0.003/0.006. Refer to Figure 4, Detail I.

(4) The thickness of the freeze plug must be the same or larger than the material thickness that is measured. The thickness of clad freeze plugs must be within +0.003/-0.000 of the material thickness. Drill a pilot hole through the center of the freeze plug, if a fastener is to be installed.

(5) Make a 100° countersink in the structure so that the diameter of the countersink is the same as the diameter of the freeze plug. If you are not sure that the adjustment of the countersink tool is correct, make a countersink in a piece of metal that has been discarded. You can do this to make sure that the depth of countersink in the structure will be correct. Refer to 51-30-8.

(6) Measure the countersink diameter in the structure, and make sure that it is the same as the diameter given in Figure 6.

WARNING: LIQUID NITROGEN IS APPROXIMATELY MINUS 320°F (MINUS 196°C). WEAR PROTECTIVE CLOTHING, AND USE IN A WELL-VENTILATED AREA TO PREVENT INJURY.

2. B. (7) Put the freeze plug in liquid nitrogen for a minimum of ten minutes immediately before installation. In thick structure apply BMS 5-95 sealant to the edges of the hole to help the installation of the freeze plug. Install the freeze plug flush to +0.003/-0.000 inch. Microshave the freeze plug if necessary. Refer to 51-70.

NOTE: Do not microshave the clad side of clad freeze plugs that will be installed in external surfaces that are not painted.

(8) For freeze plugs in more than one structural member, the freeze plug mating surface must be 0.0003 inch or less above or below the structure mating surface. Refer to Figure 4, Detail I.

(9) Drill the fastener hole through the freeze plug pilot hole and the structure that is attached. Make sure the freeze plug has a minimum wall thickness of 0.05 inch. Refer to Figure 5. Apply a finish to the bare surfaces of the freeze plug that is the same as the finish on the adjacent structure. Refer to 51-10-2. Install a fastener through the freeze plug and the structure that is attached.

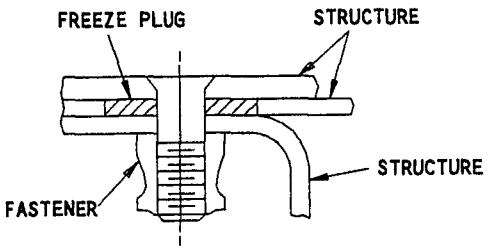

FREEZE PLUG THAT IS CONTAINED BETWEEN TWO OTHER PARTS

DETAIL I

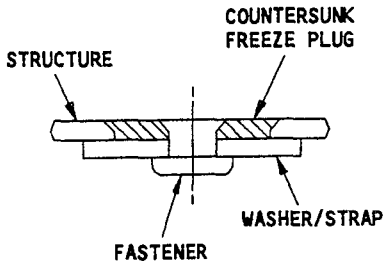

FREEZE PLUG WITH WASHER/STRAP

DETAIL II

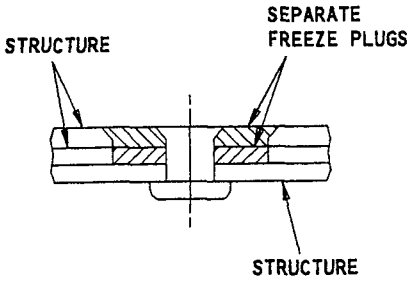

FREEZE PLUGS IN MORE THAN ONE STRUCTURAL MEMBER

DETAIL III

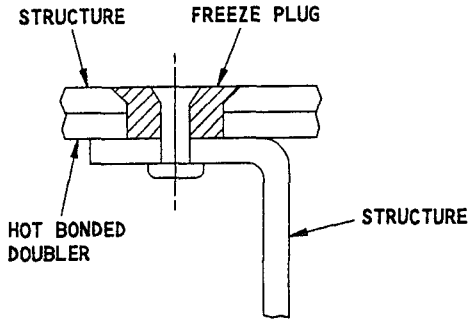

SINGLE FREEZE PLUG IN STRUCTURE WITH HOT BONDED DOUBLER

DETAIL IV

Examples of Freeze Plug Installation
Figure 1

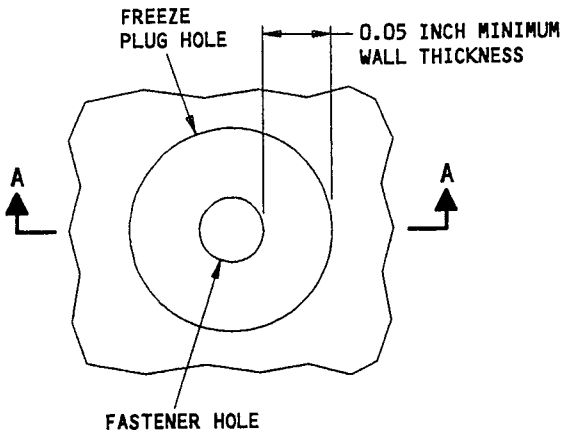

BEFORE INSTALLATION OF
THE FREEZE PLUG

DETAIL I

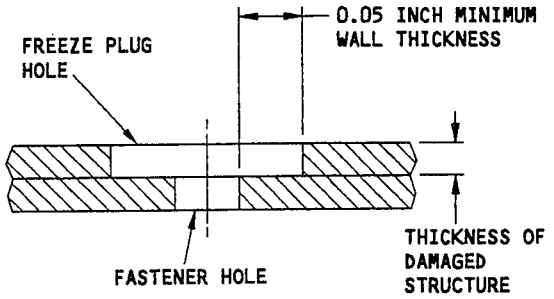

SECTION A-A

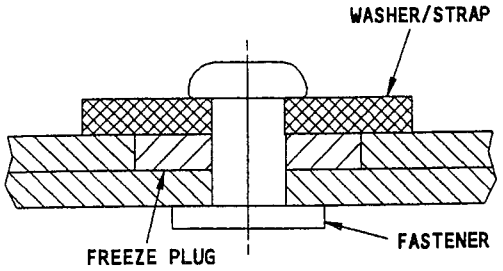

AFTER INSTALLATION OF
THE FREEZE PLUG

Straight Shank Freeze Plug Installation
Figure 2

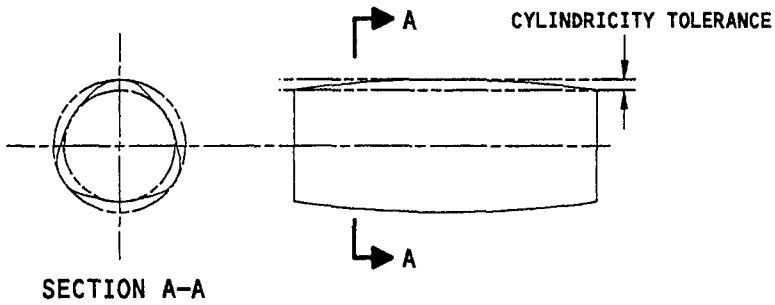

NOTES

- CYLINDRICITY IS A CONDITION WHERE ALL POINTS ON A SURFACE ARE AN EQUAL DISTANCE FROM THE SAME AXIS. A CYLINDRICITY TOLERANCE SPECIFIES AN AREA WITH TWO CYLINDERS AS LIMITS, THAT THE SURFACE MUST BE BETWEEN.
- FOR THE FREEZE PLUG INSTALLATION, THOSE AXES ARE:
  - THE CENTER OF THE HOLE THAT WILL BE REPAIRED.
  - THE CENTER OF THE FREEZE PLUG USED TO REPAIR THE HOLE.
- THE SURFACES THAT THE TOLERANCES APPLY TO ARE:
  - THE HOLE THAT WILL BE REPAIRED.
  - THE FREEZE PLUG USED TO REPAIR THE HOLE.

Cylindricity
Figure 3

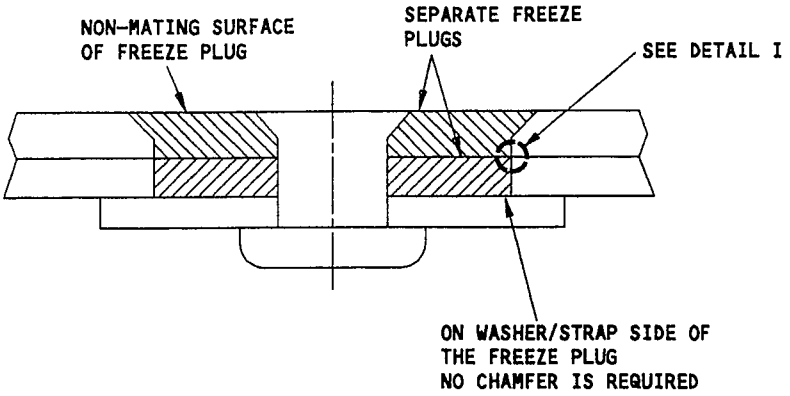

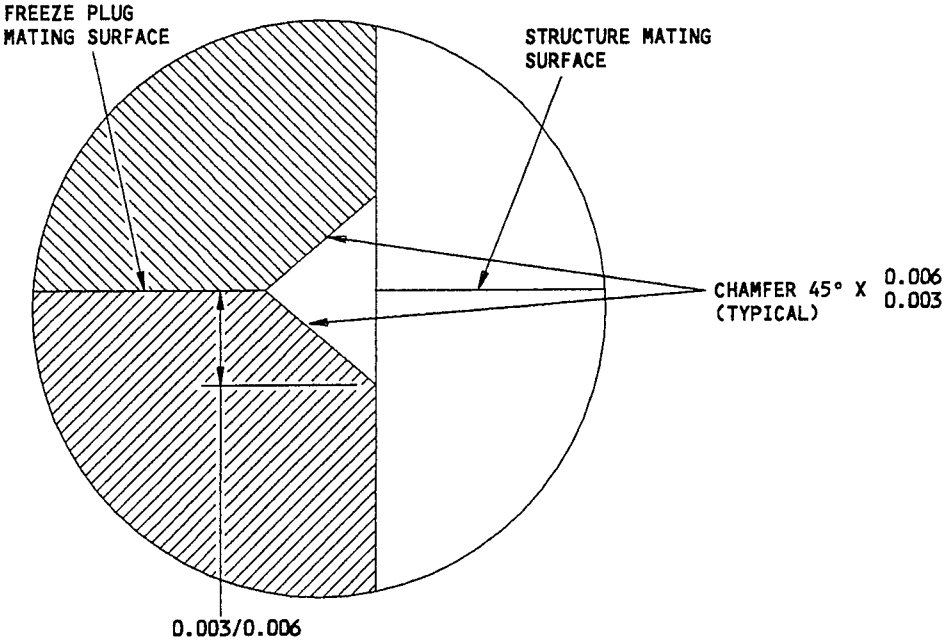

DETAIL I

NOTES

- ALL DIMENSIONS SHOWN ARE IN INCHES.
- THE FREEZE PLUG MATING SURFACE MUST BE 0.003 INCH OR LESS ABOVE OR BELOW THE STRUCTURE MATING SURFACE.

Freeze Plugs in More Than One Structural Member
Figure 4

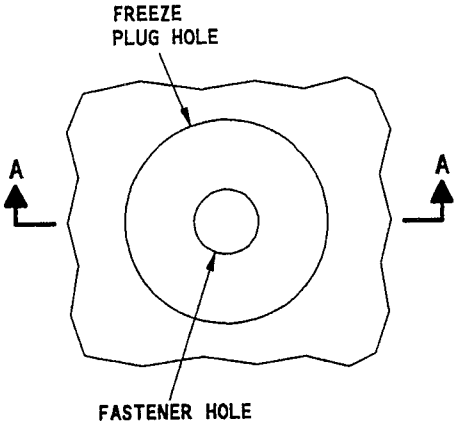

BEFORE INSTALLATION OF
THE FREEZE PLUG
DETAIL I

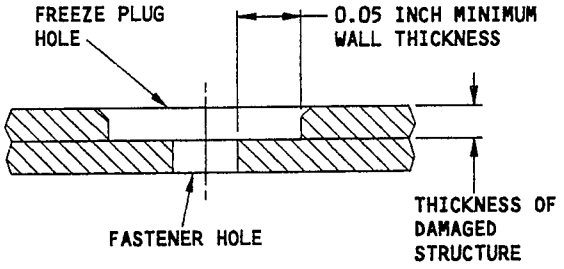

SECTION A-A

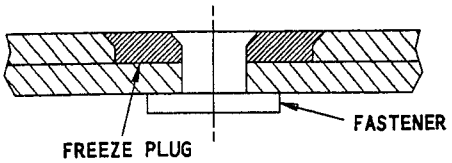

AFTER INSTALLATION OF
THE FREEZE PLUG

Countersunk Freeze Plug Installation
Figure 5

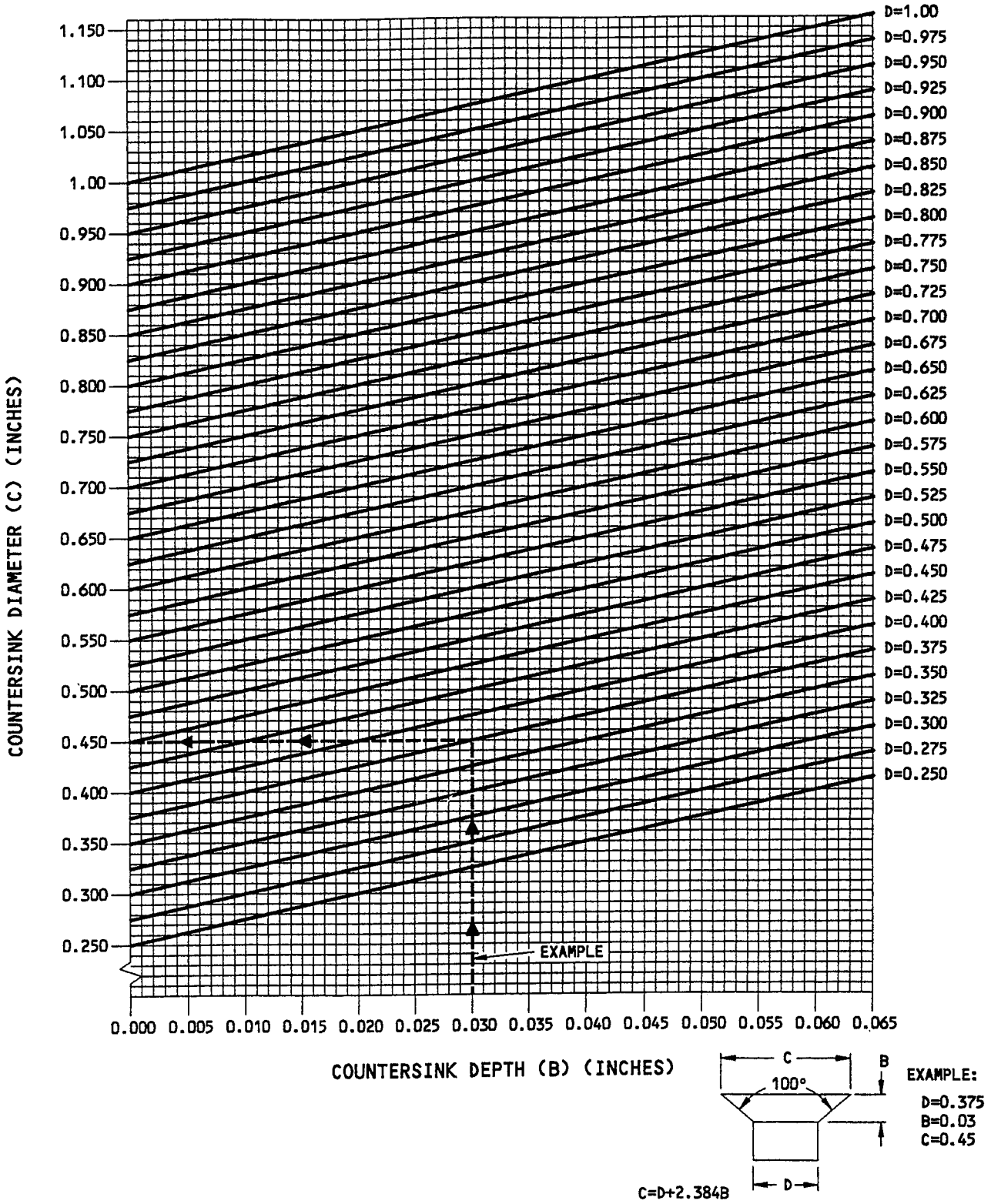

Countersink Diameter Versus Countersink Depth
Figure 6

GENERAL INSTRUCTIONS TO MAKE IT POSSIBLE TO OPERATE AIRPLANES WITH MISSING FASTENERS IN SECONDARY STRUCTURE.

1. Applicability

   A. Use this chapter-section-subject to see if it is possible to operate an airplane with missing fasteners in secondary structure.

      (1) Examples of secondary structure where missing fasteners are permitted are: fairings, trailing edge panels, and access panels. See SRM 51-00-4.

      (2) Missing fasteners must be of the types that are easy to remove, such as screws and bolts.

   B. The instructions in this chapter-section-subject do not apply to:

      (1) Fasteners that attach primary structure to the airplane.

      (2) Fasteners in control surfaces such as: ailerons, trailing edge flaps, elevators, rudder, leading edge devices, and spoilers.

      (3) Fasteners in leading edge panels of the wing, horizontal stabilizer, and vertical stabilizer.

      (4) Fasteners in panels that are adjacent to side load ribs. See Fig. 1 for panels at side load rib locations.

      (5) Fasteners adjacent to a balance bay. See Fig. 1 for panels at balance bay locations.

      (6) Fasteners in engine cowls and engine pylon fairings.

      (7) Permanent type fasteners such as rivets and lock bolts.

      (8) Hex drive bolts installed with permanent type BACC30 (or equivalent) collars.

2. General

   A. Paragraph 3 will help you make a decision to see if an airplane is in a permitted dispatch condition. If the airplane is not in a permitted dispatch condition, then you must do one or more of the steps that follow:

      (1) Install a correct fastener in each missing fastener location until the airplane is in the permitted dispatch condition.

         NOTE: You can remove a fastener from a different location, and then install the replacement fastener in a location that has a missing fastener.

         - Make sure that the fastener that is removed is the correct type, diameter, and length for the location that it will be installed at.

         - Make sure that the instructions in par. 3 let you have a missing fastener at the location where the fastener was removed.

         - Record the location of the initial missing fastener. Inspect that location as specified in par. 3.B. Make sure that at each inspection interval, that the fastener is not missing again.

(2) Tell an engineer who has the authority to do an analysis and make a decision.

(3) Call Boeing and ask for an analysis.

B. Do one of the steps that follow for a countersink that is damaged or has unsatisfactory wear:

(1) Do a temporary repair. Install a flanged CRES washer under the bolt head (BACW10D* or BACW10CC or equivalent). See par. 3. B. for inspection intervals and when you must do a permanent repair.

(2) Count the fastener location as a missing fastener. Make sure that a missing fastener is permitted at that location. See par. 3. A.

CAUTION: THE INSTRUCTIONS IN PAR. 3 CONTAIN INSPECTIONS AND FLIGHT LIMITATIONS. MISSING FASTENERS ARE PERMITTED ONLY IF THESE INSPECTIONS AND FLIGHT LIMITATIONS ARE OBEYED.

3. Permitted Dispatch Conditions

A. An airplane is in a permitted dispatch condition if all of the data that follow applies:

NOTE: If a part fails one or more of the conditions that follow, see if the Master Minimum Equipment List (MMEL) allows an airplane to operate without the part (for example: small access doors and panels). Do not operate an airplane with one of these parts on the airplane unless all of the data that follows applies:

(1) All fasteners that were specified in par. 1.B are installed in the structure.

(2) Fasteners in panels that were specified in par. 1.A. can be missing if the panels are in the conditions that follow:

(a) All electrical grounding and bonding fasteners must be installed and functional.

(b) All fasteners must be installed in the leading edge, which is open to the airflow. See Fig. 2, Detail I.

(c) All corner fasteners must be installed. See Fig. 2, Detail I.

(d) All fasteners must be installed on sides with eight or less fasteners. See Fig. 2, Detail I.

(e) One missing fastener in 10 is permitted on a side (but not on a leading edge open to the airflow).

NOTE: A side that has only nine fasteners can have the middle fastener missing. See Fig. 2, Detail I.

(f) No more than two adjacent missing fasteners are permitted (but not on a leading edge open to the airflow). See Fig. 2, Detail I.

(g) There must be three or more fasteners adjacent to a corner fastener. See Fig. 2, Detail I.

(h) There must be five or more fasteners installed adjacent to an attached fitting or primary load point. See Fig. 2, Detail II.

(i) All fasteners must be installed in structure that is adjacent to a balance bay. See Fig. 1, Detail II and Fig. 2, Detail IV.

B. If the airplane has missing fasteners, and is in the permitted dispatch condition as shown in par. 3. A., then do the steps that follow:

(1) Make sure that the fasteners that remain have the correct torque as shown in one of the references given below.

(a) The Engineering drawing that shows the panel installation

(b) The Structural Repair Manual

(c) The Airplane Maintenance Manual

(2) Record the locations of missing fasteners and fasteners that are loose or will not keep the minimum torque value.

NOTE: It is permitted to apply an approved sealant on the fastener threads to increase the torque value of a fastener. Refer to SRM 51-20-4 for approved sealants and sealing procedures.

(3) Record the locations of fastener holes and countersinks that show unsatisfactory damage or wear.

(4) Put aluminum foil speed tape over all open fastener holes.

(5) Do an inspection of the panels that had missing or loose fasteners.

(a) After the missing or loose fasteners have been found, you must do an inspection of the panels before a maximum time period of 30 calendar days has occurred.

(b) Then you must do an inspection of the panels at each 10-calendar day interval until the missing or loose fasteners are replaced.

(6) When you do an inspection of the panels that had missing or loose fasteners, make sure that you do the procedure that follows:

(a) Make sure that there are no additional missing or loose fasteners.

(b) Make sure that all open fastener holes have aluminum foil speed tape over them. Replace any tape that shows deterioration.

(c) If there are additional missing or loose fasteners, then refer to par. 3 to see if the airplane is in the permitted dispatch condition. Then do the steps in par. 2 again.

(7) Do the steps that follow at or before 60 days or 500-airplane flight hours:

NOTE: Begin your time measurement of days, or hours, from the time when missing or loose fasteners were first found.

(a) Do a permanent repair for holes and countersinks that are damaged or have unsatisfactory wear.

(b) Replace nutplates at all missing or loose fastener locations.

NOTE: Also, replace nutplates at initial fastener locations that were filled with another fastener in par. 2. A. (1) or sealed as given in par. 3. B. (2).

(c) Replace all missing or loose fasteners.

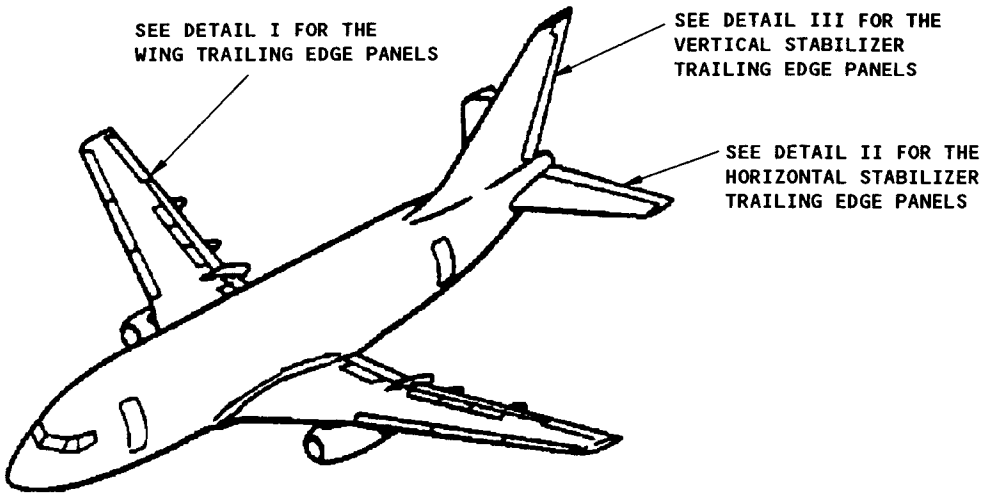

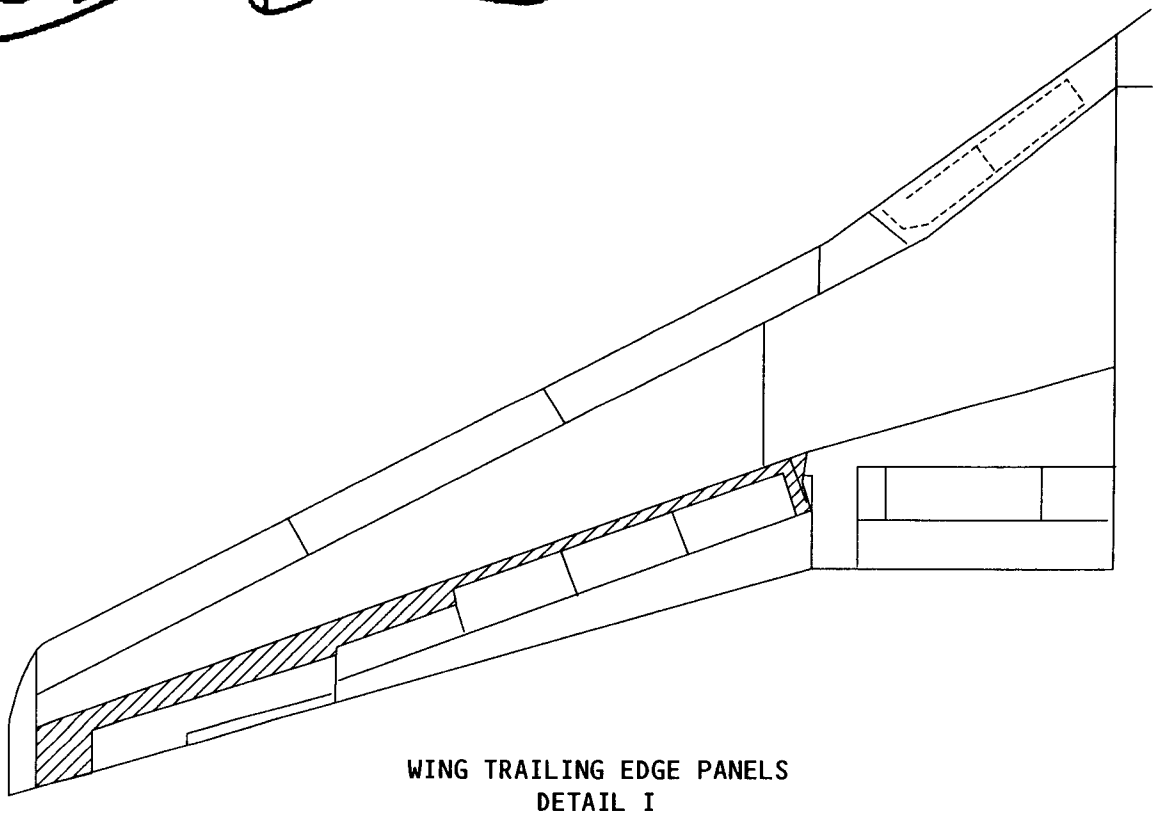

WING TRAILING EDGE PANELS
DETAIL I

CALL BOEING FOR THE PERMITTED DISPATCH CONDITION OF AN AIRPLANE WITH A MISSING FASTENER IN ONE OR MORE OF THESE PANELS. (BOTH UPPER AND LOWER SURFACES)

Panels Where Missing Fasteners are not Permitted
Figure 1 (Sheet 1)

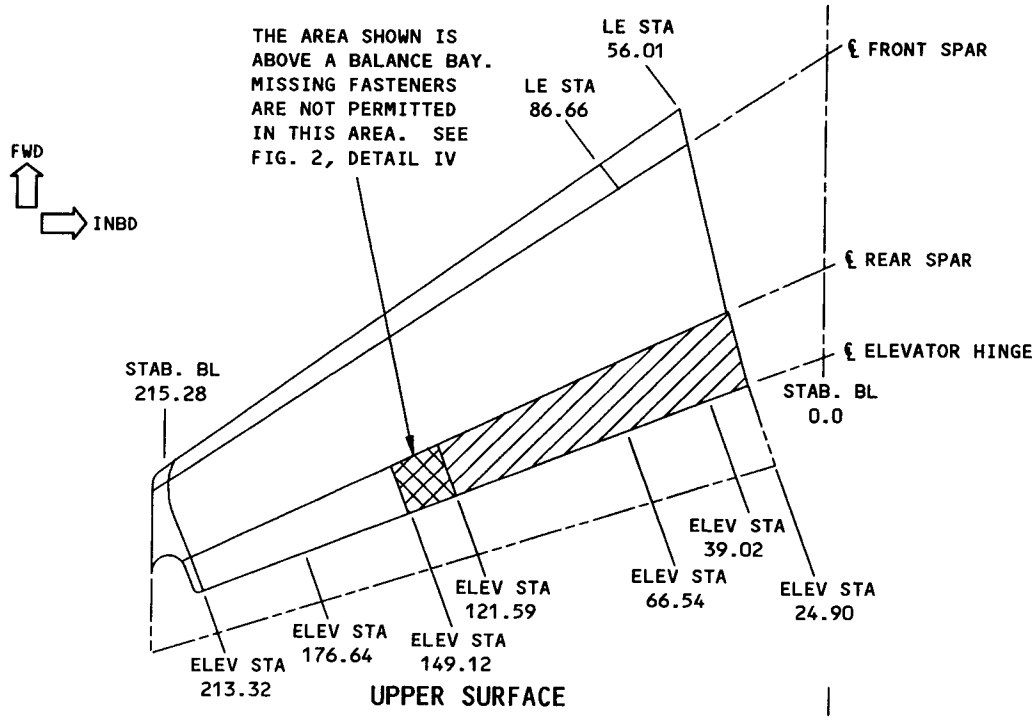

UPPER SURFACE

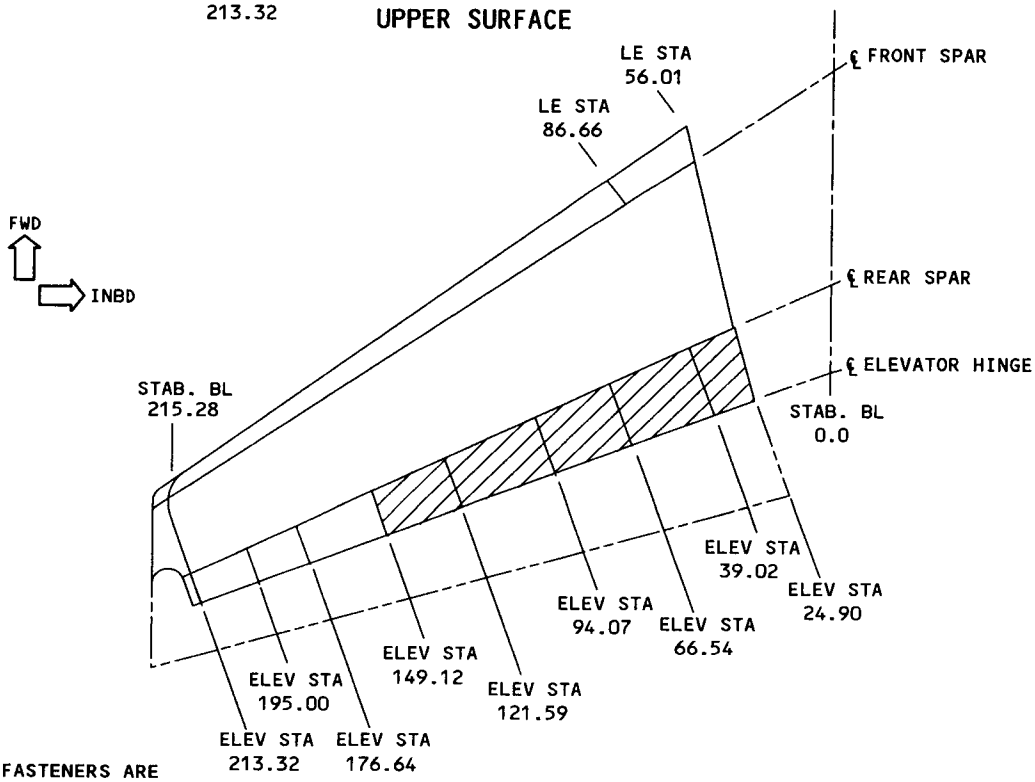

MISSING FASTENERS ARE NOT PERMITTED IN THESE PANELS

LOWER SURFACE

HORIZONTAL STABILIZER TRAILING EDGE PANELS
DETAIL II

Panels Where Missing Fasteners are not Permitted
Figure 1 (Sheet 2)

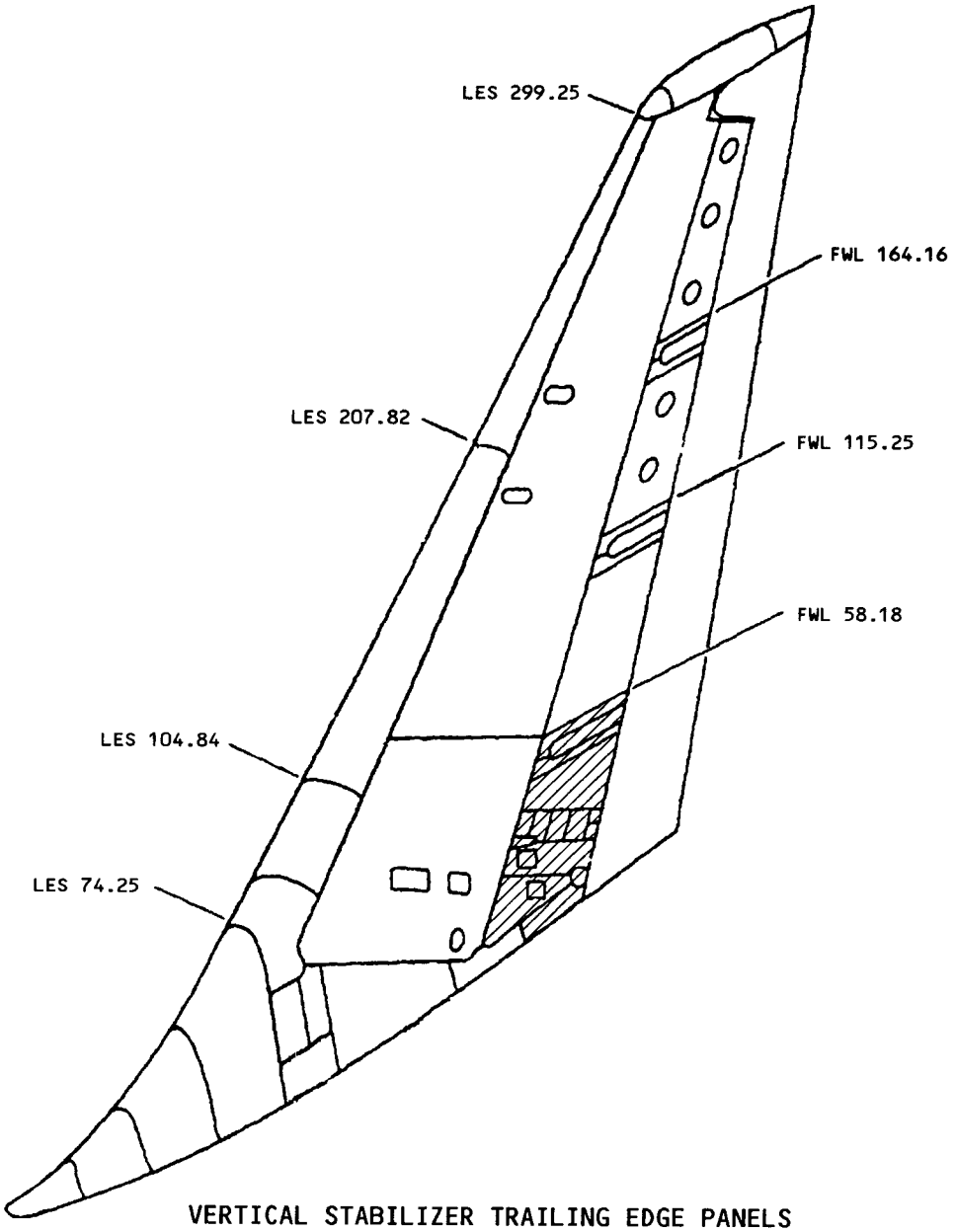

VERTICAL STABILIZER TRAILING EDGE PANELS
DETAIL III

MISSING FASTENERS ARE NOT PERMITTED IN THESE PANELS. (APPLIES TO BOTH SIDES OF THE VERTICAL STABILIZER BELOW FWL 58.18)

Panels Where Missing Fasteners are not Permitted
Figure 1 (Sheet 3)

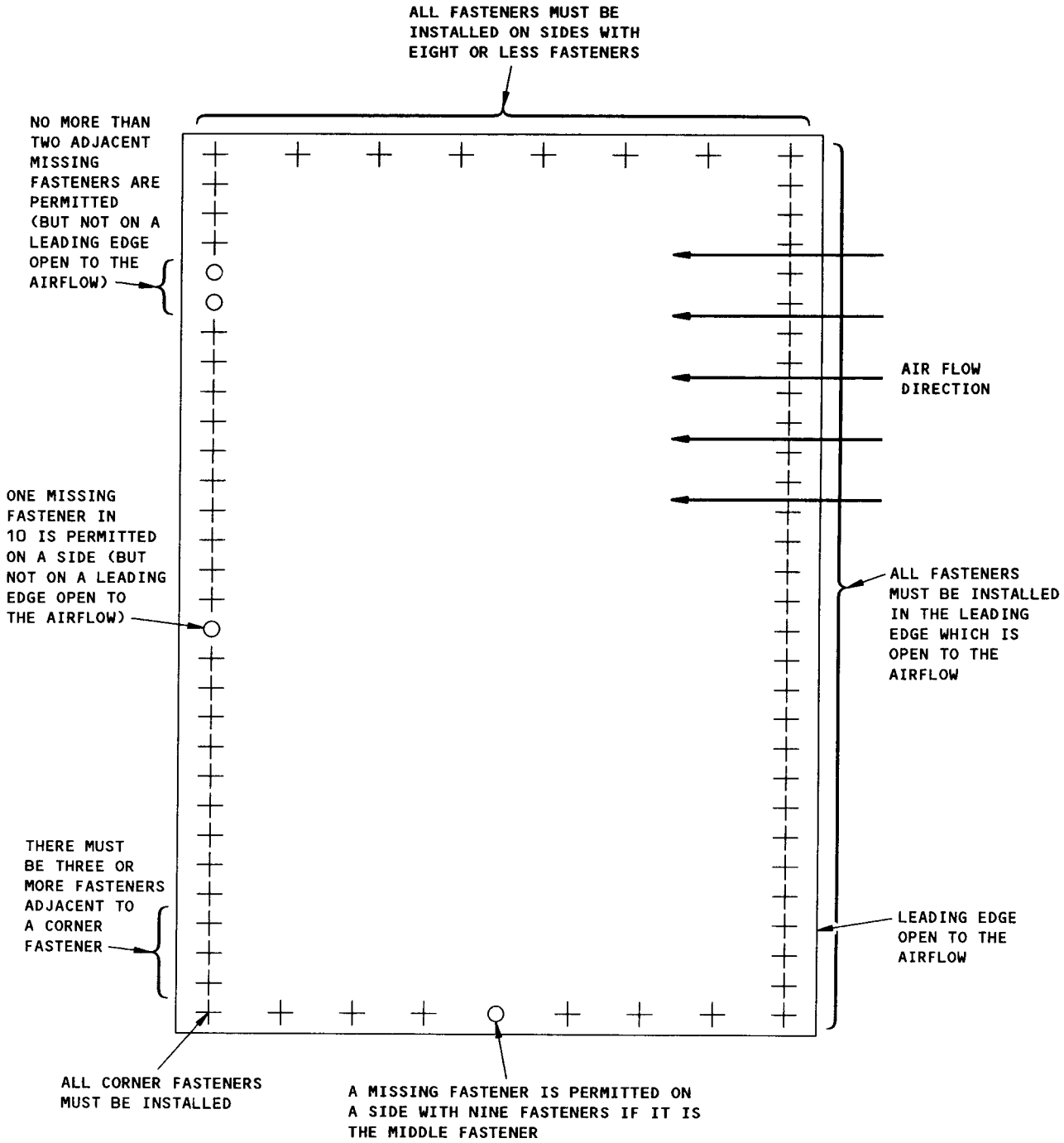

TYPICAL PANEL
DETAIL I

NOTES

+ FASTENER LOCATION

○ MISSING FASTENER LOCATION

Missing Fastener Locations that are Permitted in Secondary Structure
Figure 2 (Sheet 1)

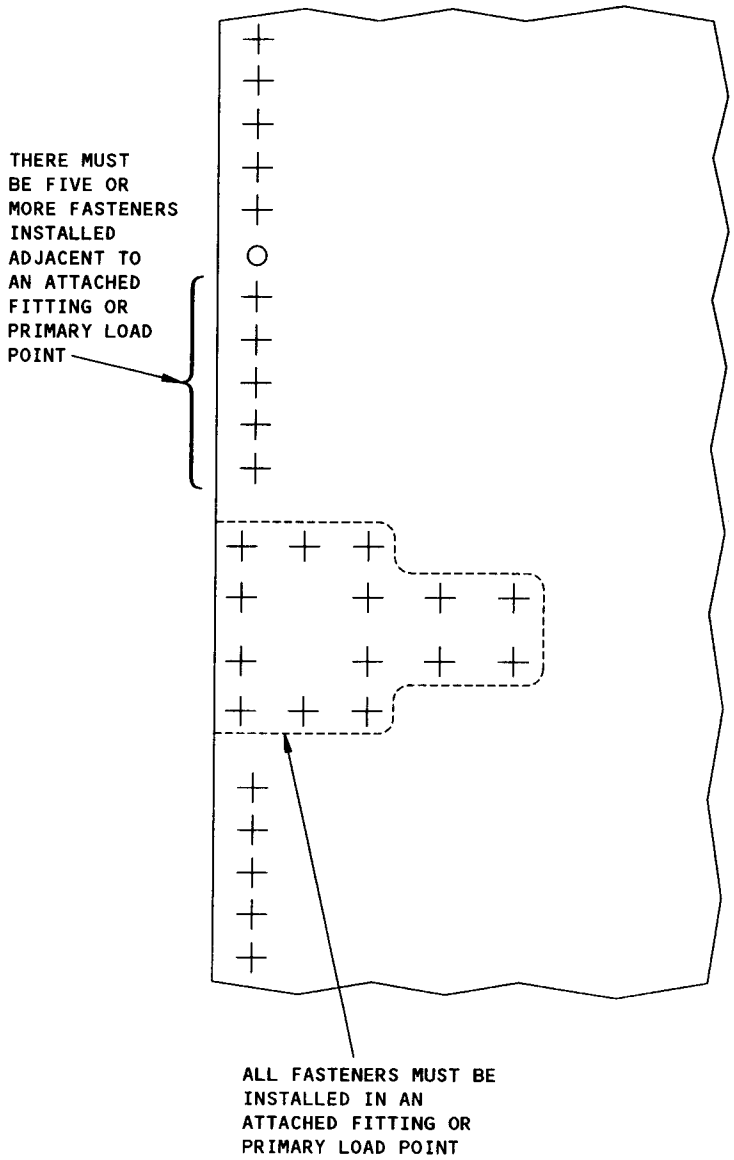

PANEL WITH AN ATTACHED FITTING OR A PRIMARY LOAD POINT
DETAIL II

Missing Fastener Locations that are Permitted in Secondary Structure
Figure 2 (Sheet 2)

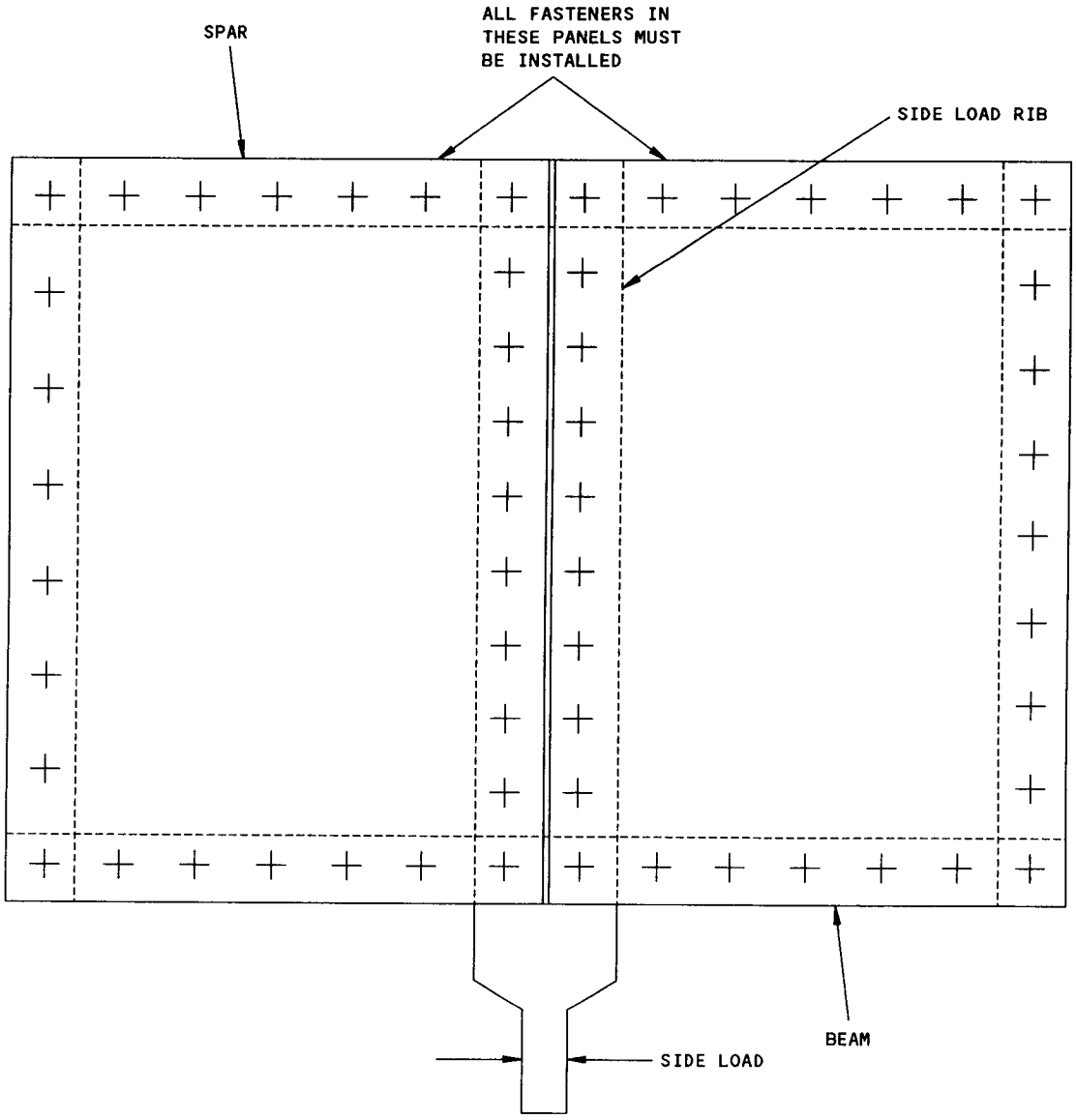

PANEL NEXT TO A SIDE LOAD RIB
DETAIL III

Missing Fastener Locations that are Permitted in Secondary Structure
Figure 2 (Sheet 3)

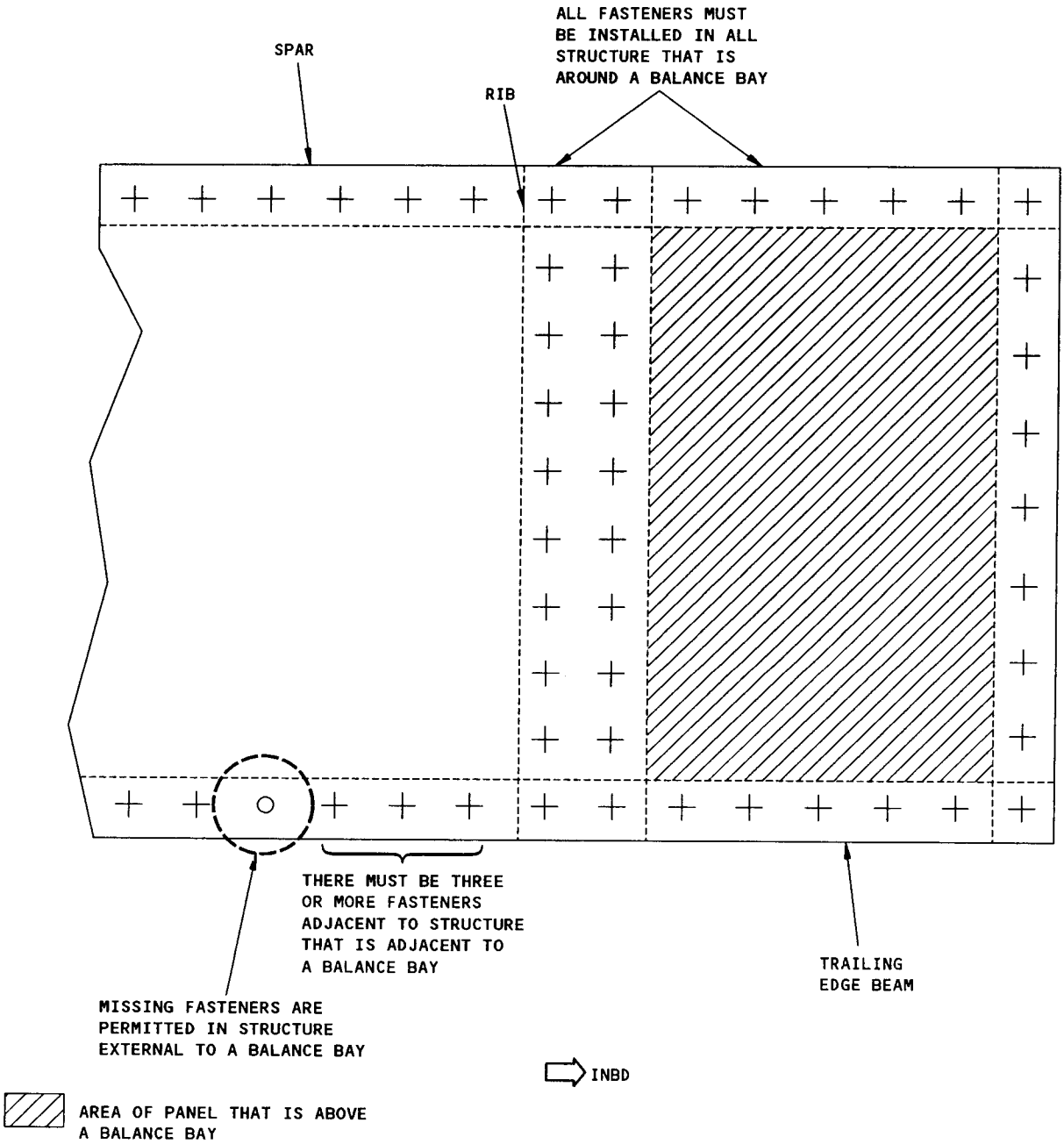

PANEL OVER A BALANCE BAY
DETAIL IV

Missing Fastener Locations that are Permitted in Secondary Structure
Figure 2 (Sheet 4)

SURFACE ROUGHNESS FINISH REQUIREMENTS

1. Applicability

   A. This chapter-section-subject tells how to measure the surface roughness on a metal surface.

2. General

   A. Surface roughness affects fatigue life. Smoother (finer) surface finishes improve fatigue life. Most machining or abrasive grinding operations create notch patterns on the surface which result in stress fatigue cracks.

   B. Surface roughness and finish requirements on reworked parts are shown as arithmetic values.

   C. These arithmetic values, are numbers in micro-inches. The lower the number, the smoother the surface finish. See Figure 1 for the Arithmetic Average Deviation.

3. General Machining

   A. Roughness Values

      NOTE: The following are maximum acceptable roughness values for machine finishes. There are no limits to the smoothness unless specified by a lower limit.

      (1) 500 micro-inch rough machine finish. Rough, low grade surfaces that result from heavy cuts and course feeds in milling, turning, shaping, boring and from very rough filing, rough disc grinding and snagging. Examples of this surface are sand castings or rough forgings or the ripple finish on parts made by Keller end milling.

         (a) Not permitted on critically loaded parts, the failure of which would be unsafe to ground personnel or the flight of the airplane.

      (2) 250 micro-inch normal machine finish on steel that is heat treated up to 200,000 psi. Coarse production surfaces that results from very coarse surface grind, rough file, disc grind, and from rapid feeds in turning, milling, shaping, drilling, boring, grinding, and so on, where definite tool marks are permitted. This roughness can also be produced on the natural surfaces of forgings, permanent mold castings, extrusions, and rolled surfaces.

         (a) Surfaces with this roughness value can be produced very economically and are used frequently for parts where stress requirements, appearance, conditions of operations, and design permit.

         (b) Not permitted on:

            1) Steel that is heat treated over 200,000 psi or in areas with high fatigue stresses.

            2) Aluminum alloys.

            3) Steel surfaces mated with aluminum alloys.

BOEING PROPRIETARY - Copyright © - Unpublished Work - See title page for details.

(3) 125 micro-inch machined finish on steel or aluminum surfaces.

(a) The roughest surface recommended for parts with fatigue stress or vibration. This surface roughness is also permitted for bearing surfaces when the motion is slow and the loads are light or infrequent. This surface finish can also be on permanent mold castings, die castings, cold rolled surfaces, aluminum extrusions, and some titanium 6AL-4V extrusions.

(b) Not permitted on:

1) Surfaces with high fatigue stresses.

2) Fast rotating shafts and axles, or parts that have severe vibration.

3) The mating surfaces of steel and 7075 aluminum alloy parts when these parts are in areas with fatigue stresses.

(4) 63 micro-inch machined finish.

(a) A good machine finish, produced under controlled production procedures that use high speeds and fine feeds that take light cuts with well sharpened cutters. This surface value may be specified where close fits are required and may be used for all stressed parts.

(b) This surface roughness is satisfactory for bearing surfaces when the motion is slow and the loads are light or infrequent. This surface roughness can also be on aluminum extrusions, cold rolled surfaces, die castings, and permanent mold castings when tightly controlled. Can be used where close fits are required for stressed parts. Adequate for bores in highly stressed parts that are exposed to vibration but little or no relative motion.

(c) Also permitted on:

1) Thin, highly loaded sections or areas of high stress concentration under fatigue loading.

2) Surfaces mated with highly stressed areas.

4. Measurement

A. Surface roughness may be measured by one of the methods that follow:

(1) Physical comparator such as surface roughness scratch plates or finish blocks used in machine shops. Do the steps that follow:

(a) Select a comparator with a value specified in a repair drawing.

(b) Select the roughest area on the part surface to be measured.

(c) Feel the comparator and the part with a fingernail.

BOEING PROPRIETARY - Copyright © - Unpublished Work - See title page for details.

(d) Select the direction on the comparator and the part surface which exhibits the highest roughness.

(e) See if the part surface is as smooth as the comparator.

(2) Stylus-Type Inspection Instrument

(a) This instrument must meet American National Standard (ANSI) B46.1 or equivalent standard for precision and accuracy.

(b) Operate the stylus-type inspection instrument as specified in the manufacturer's instructions.

BOEING PROPRIETARY - Copyright © - Unpublished Work - See title page for details.

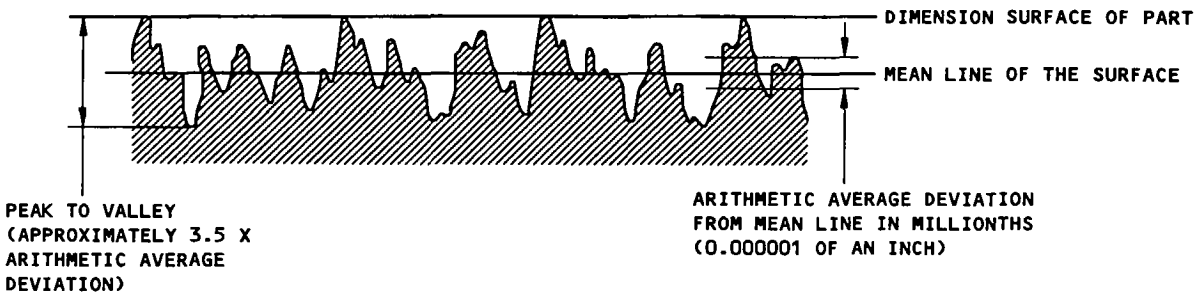

Arithmetic Average Deviation
Figure 1

BOEING PROPRIETARY - Copyright © - Unpublished Work - See title page for details.

1. General

A. This section describes materials used when making repairs contained within this manual. Sources of supply are included. These materials are also called out in the applicable repair section. Some materials described are not only used in the actual repair but also in the preparation and accomplishment of repairs.

B. Refer to 51-20-1 for sheet metal materials.

C. Refer to 51-20-2 for extrusions and formed sections.

D. Refer to 51-20-3 for nonmetallic materials, including sealants.

E. Refer to 51-20-4 for sealant classification and substitutes.

F. Refer to 51-20-5 for erosion protection materials.

SHEET METAL MATERIALS

1. General

A. Most of the sheet metal used in the structure of the airplane is aluminum alloy. Some sheet metal made from corrosion resistant alloy, titanium alloy, and steel alloy is also used. Figure 1 shows approximately equivalent strength materials.

B. If you repair the airplane structure, apply a finish that gives protection to all bare aluminum alloy parts and surfaces that were cut and drilled. Other metals like titanium, CRES, and inconel may also need finishes. Refer to SRM 51-10-2, and SOPM 20-41-02.

C. Tool Terminology

(1) A hand tool is a tool that you can hold and operate with your hands.

(2) A hand drill is a drill that:
- You can hold and operate in your hand
- Has adjustable speeds which you can change as you drill
- Does not have automatic feed control.

(3) RPM is an abbreviation for Revolutions Per Minute.

2. Aluminum Alloys

A. You can identify aluminum alloys by symbols of the Aluminum Association four-digit index system. Two examples of an alloy identifier are 2024 and 7075.

B. The "TXXX" code that follows an alloy identifier shows how the alloy was heat-treated. If an "O" follows the alloy identifier then the material has not been heat-treated. The alloy is in the annealed condition. You can form aluminum easily when it is annealed, but you must heat-treat the part before you install it on the airplane.

C. The word "clad" before an alloy identifier shows that the alloy has a thin layer of pure aluminum on it. The layer of aluminum was applied to the alloy before the last rolling procedure.

D. Figure 2 shows alternative replacement materials. If the initial material is not available, then use one of the alternative materials shown. Figure 2 also gives material replacement factors and an example of how they are used.

2. E. The aluminum alloy sheet metals most frequently used are 2024-T3 and 7075-T6. 7075-T6 is stronger than 2024-T3. The two materials have different minimum bend radii. The two materials have different forming properties. The minimum bend radius of 7075-T6 is larger that 2024-T3, so it is often formed in the annealed condition (7075-O). After the 7075 sheet is formed in the annealed condition, it is heat-treated to 7075-T62. 2024-T3 is usually formed in the heat-treated condition. The minimum bend radii of different aluminum sheet metal materials is given in Figure 3.

   F. You must be careful with aluminum alloy material. Small damage, such as scratches, burrs, and nicks can cause a dangerous decrease in the fatigue strength of the aluminum alloy material.

   G. If the alloy identifier has been removed from a sheet of aluminum, you can test it to identify the alloy. Use the hardness and conductivity tests given in SRM 51-10-3.

3. Magnesium Alloys

   WARNING: KEEP MAGNESIUM PARTICLES AWAY FROM SOURCES OF IGNITION. SMALL PARTICLES OF MAGNESIUM BURN VERY EASILY. IN SUFFICIENT CONCENTRATION, THESE SMALL PARTICLES CAN CAUSE AN EXPLOSION.

   IF WATER TOUCHES MOLTEN MAGNESIUM, A STEAM EXPLOSION COULD OCCUR. EXTINGUISH MAGNESIUM FIRES WITH DRY TALC, CALCIUM CARBONATE, SAND, OR GRAPHITE. APPLY THE POWDER ON THE BURNING METAL TO A DEPTH OF 1/2 INCH OR MORE. DO NOT USE FOAM, WATER, CARBON TETRACHLORIDE, OR CARBON DIOXIDE.

   A. Magnesium alloy looks almost the same as aluminum alloy. For equal volumes of magnesium and aluminum, the weight of magnesium alloy is approximately two-thirds the weight of aluminum. To keep the weight of the airplane low, magnesium alloy is sometimes used.

   B. You can cut, drill and ream magnesium alloy with the same tools you use on steel or brass. The cutting edges of the tool must be sharp.

   C. Magnesium alloys must not touch methyl alcohol. Do not use magnesium alloys in liquid deicing and water injection systems. Do not use magnesium alloys in the integral fuel tank areas.

   D. Use Type B rivets (5056-F aluminum alloy) in magnesium alloy parts. Use clad 2024-T3 aluminum alloy for repair parts.

4. Titanium Alloys

WARNING: KEEP TITANIUM PARTICLES AWAY FROM SOURCES OF IGNITION. SMALL PARTICLES OF TITANIUM BURN VERY EASILY. IN SUFFICIENT CONCENTRATION, THESE SMALL PARTICLES CAN CAUSE AN EXPLOSION.

IF WATER TOUCHES MOLTEN TITANIUM, A STEAM EXPLOSION COULD OCCUR. EXTINGUISH TITANIUM FIRES WITH DRY TALC, CALCIUM CARBONATE, SAND, OR GRAPHITE. APPLY THE POWDER ON THE BURNING METAL TO A DEPTH OF 1/2 INCH OR MORE. DO NOT USE FOAM, WATER, CARBON TETRACHLORIDE, OR CARBON DIOXIDE.

A. Titanium alloy looks almost the same as corrosion resistant steel (CRES) and is almost as strong. For equal volumes of titanium and CRES, the weight of titanium alloy is approximately 56 percent the weight of steel.

B. Titanium is very resistant to atmospheric corrosion and you usually do not need to apply a finish to it. But, you must isolate titanium from magnesium, aluminum, or alloy steel. If titanium contacts magnesium, aluminum or alloy steel, galvanic corrosion or oxidation will occur. Refer to SRM 51-10-2, SRM 51-20-4, and SOPM 20-41-02 for finishes, treatments, and sealants that give protection.

C. Some SRM repairs use formed 6Al-4V annealed titanium sheet. The procedures used to form 6Al-4V annealed titanium sheet are given below.

(1) Hot forming 6Al-4V annealed titanium.

(a) Apply a scale inhibitor to the part before you heat it.

(b) Heat the part to a temperature above 1200°F (649°C), but below 1500°F (816°C).

(c) Form the titanium to the radii given in Figure 4. If you form the radii smaller than this, you must penetrant inspect the bend. Refer to SOPM 20-20-02.

(d) Keep the part at this temperature for more than 10 minutes but less than 10 hours.

(e) After the part is cool, remove the scale from the surface. To remove the scale, etch all the surfaces to the depths shown in Figure 4. Refer to SOPM 20-30-03 to etch titanium.

4. C. (2) Cold forming 6Al-4V annealed titanium (room temperature forming).

(a) Form the titanium to the radii given in Figure 4. If you form the radii smaller than this, you must penetrant inspect the bend. Refer to SOPM 20-20-02.

(b) Stress relieve the part as follows:

1) Heat the part to a temperature above 1250°F (677°C), but below 1450°F (788°C).

2) Keep the part at this temperature for more than 30 minutes but less than 10 hours.

D. Use a hand drill only when you have to. If you can, you should use positive-power-feed drills. Refer to SOPM 20-10-07, D6-51702, for information on drilling titanium with positive-power-feed drills. Figure 5 shows equipment that can be used to hand drill titanium.

Use these guidelines when you drill titanium:

(1) If you use a hand drill, the largest diameter hole you can drill (in a single step) is 0.1563 inch. This is because:
- You must push on the drill with a large force
- When you push on the drill with much force, the larger diameter drill bits will not cut satisfactorily
- Drill bits that do not cut satisfactorily cause damage to the hole.

(2) Use a 'pistol grip' type hand drill if you can because you can push harder with this type of drill.

(3) Holes with a diameter of 0.1875 inch and larger can be hand drilled if:
- You start with a hole with a diameter of 0.1563 inch
- Increase the diameter of the hole in 0.0313 or 0.0625 inch increments.

If you use a hand drill with a 90° angle head, then you must use 0.0313 inch increments. If you use the standard 'pistol grip' type hand drill, then you can use an increment of 0.0625. You can use the larger increment because you can push harder with the 'pistol grip' type hand drill.

Holes with diameters as large as 0.75 inch have been made using this procedure.

4. D. (4) We recommend you use the usual high-speed steel drill bits when you hand drill. When you hand drill titanium, we recommend these RPM (revolutions per minute) ranges:

0.0625	920 to 1830 RPM
0.125.	460 to 920 RPM
0.1875	230 to 460 RPM

(5) The life of a drill bit is shorter when you drill titanium than when you drill steel.
Do not:
- Use a blunt drill bit
- Let a drill bit rub the surface of the metal and not cut it.

If one of these conditions occurs, the titanium surface will become work-hardened and it will be very difficult to start the drill again.

(6) When you hand drill two or more titanium parts at the same time, you must clamp them together tightly. To clamp them together, use temporary bolts, Cleco clamps, or tooling clamps. Put the clamps around the area that you will drill, and as near the area as possible.

(7) When you hand drill thin or flexible parts, put a support (such as a block of wood) behind the part. If you do this, you will:
- Make good, clean holes
- Break fewer drill bits
- Make a smaller exit burr.

(8) Titanium has a low thermal conductivity. When it becomes hot, other metals will become easily attached to it. Particles of titanium will often become welded to the sharp edges of the drill bit if the drill speed is too high. When you drill large plates or extrusions, use a water soluble coolant or sulphurized oil.

(9) Cutting Fluids

(a) If you use a cutting fluid when you drill:
- The holes will have a better tolerance
- The drill bit will last longer.

(b) If the hole has a depth larger than the diameter of the drill bit, use a cutting fluid. If the hole has a depth less than the diameter of the drill bit, you can drill with or without a cutting fluid.

BOEING PROPRIETARY - Copyright © - Unpublished Work - See title page for details.

4. D. (9) (c) Cutting fluid types are listed below. If you use a cutting fluid, you must clean the repaired area before you apply paint or sealant. Refer to SOPM 20-41-02 and SOPM 20-50-12.

1) If you can clean the repair area after you drill, we recommend you use one of the cutting fluids that follows:

a. Daracool 706 (4% cutting - 96% water mix)

b. BOELUBE

Note: BOELUBE comes in liquid, solid, and paste forms.

2) If you can not clean the repair area after you drill, use BOELUBE as a cutting fluid.

(d) You can get cutting fluids from these sources.

1) Daracool 706: W.R. Grace and Co.
Davison Chemical Division
10 East Baltimore Street
Baltimore, MA 21202-1630

2) BOELUBE: The Orelube Corp.
201 East Bethpage Road
Plainview, NY 11803-4202

BOEING PROPRIETARY - Copyright © - Unpublished Work - See title page for details.

4. E. Use these guidelines when you ream titanium alloy with a hand tool.

(1) You can use straight-fluted-chucking reamers or reamers with minimum margins (0.010 inch or less). We recommend that you use the usual high speed steel reamers when you ream with a hand tool.

(2) The drill should have a motor with a maximum speed of less than 600 RPM.

(3) When you ream a hole, use a higher feed rate than when you drill a hole. Ream the hole with a feed rate which will make a satisfactory finish. When you ream, the reamer must constantly cut the metal.

(4) If the hole has a depth larger than the diameter of the drill bit, ream it with a cutting fluid. If the hole has a depth less than the diameter of the drill bit, you can ream it with or without a cutting fluid. For more information on cutting fluids, see the guidelines for drilling titanium.

(5) When you ream a hole to the actual fastener dimension, you should remove as much material as possible. Remove at least 0.0156 inch from the hole when the diameter of the hole is less than 0.3125 inch. Remove at least 0.0313 inch from the hole when the diameter of the hole is 0.3125 inch and larger.

(6) Remove the reamer from the hole before you stop its rotation.

(7) When a reamer is made from a larger reamer, it is usually circle ground. When a reamer is circle ground, the reamer's margin width increases. If the reamer's margin width increases, then it will make a hole that is too large. To prevent oversize holes you must decrease the margin width to 0.010 to 0.015 inch.

F. Use these guidelines when you countersink titanium:

(1) When you countersink, use the same speeds and feed rate as when you drill.

(2) We recommend that you do not countersink into titanium with hand tools when the hole is greater than 0.1875 inch.

(3) Use the usual high speed steel cutters to countersink into titanium.

(4) When you use a cutting fluid, the speed of the cutter should be 25 to 30 SFM (Surface Feet per Minute). When you do not use a cutting fluid, the speed of the cutter should be 20 to 25 SRM.

4. F. (5) For holes with a diameter of 0.1875 or less, you can use a microstop countersink tool.

G. Follow these guidelines when you cut titanium with a hand tool:

(1) Tools which shear metal, like roller shears or nibblers, cut titanium well. But, most tools are designed for materials which are easy to cut, like aluminum or mild steel. To get good results when you cut titanium:
- you must use a tool that is designed to cut a material that is twice as thick
- you must slow the speed of the tool.

Figure 5 shows equipment that can be used to cut titanium.

(a) Roller Shears

1) For titanium sheets of gage 0.100 inch and less, roller shears cut well. For gages above 0.100, roller shears cause edge cracks.

(b) Nibblers

1) You can use nibblers to cut titanium sheet for gages up to 0.100. After the titanium is cut, the edge should be square, scalloped, and lightly burred. If there are many burrs, it is possible that the punch is damaged.

2) After you cut with nibblers, you must hand finish the edges. To make the edge clean, about 0.010 inch of the edge will usually need to be removed.

3) You should use a motor with a low speed (approximately 450 strokes per minute).

4) If you use a motor with a low speed, you do not need a cutting fluid. If you use a motor with a high speed (above 600 strokes per minute) you must use a cutting fluid. A water soluble oil, like Daracool 706 spray must be used.

(2) Routers and similar tools do not cut titanium well. It is difficult to hold the tool stable and keep the chip rate constant.

(3) Saber saws may be used when you cannot use other tools. But, they cut more slowly and the blades become blunt quickly.

4. H. Refer to SOPM 20-10-07 when you machine titanium with equipment that is not movable.

   I. When you machine titanium, you must remove all of the sharp edges. Unless specified differently by a repair, remove all machined edges to a radius of 0.008 inches or more.

      (1) A color that is darker than light straw caused by an increase in temperature must be removed.

5. Corrosion Resistant Steel (CRES)

   A. Corrosion-resistant-steel (CRES) sheet is used on some parts when high strength is necessary.

   B. CRES must not touch magnesium, aluminum or cadmium. If it does, galvanic corrosion will occur. To isolate CRES from magnesium and aluminum, apply a finish that gives protection between their mating surfaces. Refer to SRM 51-10-2 for finishes that give protection.

   C. The minimum bend radii of CRES sheet material is shown in Figure 6.

6. Inconel

   A. Inconel 625 and Inconel 718 are nickel-chromium alloys. Inconel is corrosion resistant and stays strong at high temperatures. Because of these properties, Inconel is frequently used in the power plant structure.

   B. If you drill into Inconel 625 and 718 with the usual procedures, it can:
      - Cause drill bits to break sooner
      - Cause damage to the edge of the hole when the drill bit goes through the metal.

      We recommend that you:
      - Drill pilot holes in loose repair parts with power feed equipment before you pre-assemble them
      - Pre-assemble the repair parts and drill the pilot holes in the mating structure
      - Drill the pilot holes to their completed hole dimension.

6. C. You can hand drill Inconel alloys of all heat-treat conditions. To hand drill gages of 0.09 and less, we recommend the procedure below:

(1) Drill bit type

(a) A stove burner drill bit is better than a cobalt drill bit because it is stronger. Also, the 118-degree point does not cause damage to the edge of the hole as easily as the usual 135-degree cobalt drill bit. However, you can drill No. 30 or No. 40 pilot holes with cobalt "rivet knock-out" drill bits.

(b) You can use a 135-degree point steel drill bit. We recommend these steel drill bits:
- NAS907, Types C, P3, or P5 for Inconel 718
- NAS907, Type P9 for Inconel 625

(2) Feed

(a) Feed rates are not used when you hand drill. When you hand drill you must push hard on the drill, but stay at a constant chip rate. Example: for a No. 30 hole, push the drill with approximately 50 pounds of force.

(b) Holes with a diameter between 3/16 and 3/8 should be drilled in two steps. One step is sufficient for holes with a diameter less than 3/16 inch. You can use 1 inch-foot taper reamers to increase the diameter of the pilot hole to 0.1563 inch.

(3) Speed

(a)

DRILL SIZE	MAXIMUM RPM
80-30	500
29-U	300
3/8	150

(4) Cutting Fluid

(a) A cutting fluid is not necessary when you hand drill.

7. Flat Patterns

A. A flat pattern is the shape of a flat piece of sheet metal necessary to make a bent part. To make a flat pattern, measure the dimensions and the radii of the damaged part or the opposite part. To measure the dimensions and radii you can use one of the two procedures below:
- Bend a piece of soldering wire around the part
- Make a sketch of the part as shown in step (1)

The second procedure is more accurate. After you measure the dimensions, you can calculate the developed length and make the flat pattern.

(1) Make a sketch of the cross-section of the part. Refer to Figure 7. Show these dimensions of the part:

A = Developed Flange Width
B - Set-Back (Figure 8)
C - Web Length
D = Set-Back (Figure 8)
E = Developed Flange Width
R = Bend Radius (Figures 3, 4 and 6)
F = Flange Angle
G = Flange Angle
T = Material Thickness

(2) Calculate the developed length. Use this formula:

Developed Length = $A-X+C-X_1+E$
X (Refer to Figure 9)
X_1 (Refer to Figure 9)

CAUTION: DO NOT USE A METAL SCRIBER. THE SCRATCHES ON THE METAL CAN CAUSE CRACKS.

(3) Put the flat pattern on a flat sheet of repair material that has no pilot holes. Refer to Figure 7. With a sharp crayon, make a line on the sheet of repair material all around the flat pattern. Cut the repair part out. The repair part can be bent to the shape of the damaged part.

8. Rules for Shimming

A. Figure 10 shows the instructions for shims that are used in repairs.

9. Metal Thinning

The material thickness after forming or stretching sheet shall be at least 95 percent of the minimum material thickness determined below.

An example of how the minimum thickness can be calculated is as follows:

For a 0.063 inch thick Alclad 2024-T3, Fig. 11 Table IV shows a ±0.003 inch tolerance for 48 inch wide sheet.

A. 0.063-0.003 inch = 0.060 inch minimum thickness before forming.

B. 95 percent of 0.060 inch = 0.057 inch minimum thickness after forming.

The thickness tolerances for alloy steel sheets are shown in Table V, while Table VI shows the tolerances for corrosion resistant steel and titanium alloy sheets.

NOTE: Fig. 11, Table IV was obtained from the American National Standard (ANSI H35.2) for Dimensional Tolerances of aluminum mill products. Fig. 11, Tables V and VI were taken from the Aerospace Materials Specifications (AMS 2252 and AMS 2242, respectively).

10. Pre-assembly Forces

Before formed parts are installed, they must first conform to the process tooling (surface plates, check fixtures, dies, molds, etc.) within the specified pre-assembly methods and requirements specified in the engineering drawing.

If the pre-assembly methods and requirements are not specified in the engineering drawing, localized forces may be used to assemble the part to its checking device within the following limits:

A. A finger pressure of 2-5 pounds for metal thickness less than 0.045 inch.

B. A hand pressure of 5-10 pounds for metal thickness of 0.045 inch or greater.

C. A vacuum table may be used instead of localized force. Vacuum tables shall maintain a uniform pressure of 0.014 psi for metal thickness less than 0.045 inch or 0.035 psi for metal thickness of 0.045 inch and greater. Higher initial pressure may be used to make sure contact between the parts and the tables.

11. Surface Integrity

Refer to the surface integrity requirements in the applicable allowable damage subject in Chapter 52 through 57 in this manual for the allowable limits. Refer to SRM 51-10-01 (737-100/200) and SRM 51-10-02 (737-300/400/500) to repair surface damages to the skins.

12. Surface Waviness

Refer to SRM 51-70 for surface waviness requirements.

MATERIAL		DOMESTIC SPECIFICATION (USA) (Acceptable Alternatives)		UNITED KINGDOM DESIGNATION
		MATERIAL	SPECIFICATION	SPECIFICATION
ALUMINUM	SHEET	CLAD 2024-T3	QQ-A-250/5	L109 [A]
		CLAD 2024-T42	QQ-A-250/5	L110
		BARE 2024-T3	QQ-A-250/4 or AMS-QQ-A-250/4	L70 [A]
		CLAD 2014-T6	QQ-A-250/3	L165 (Replaced L73)
		2219-T81	QQ-A-250/30	DTD5070
		5052	AMS 4017	2L55
		6061	AMS 4117	BS 1474
		CLAD 7075	QQ-A-250/13	L88
	PLATE	2024-T351	QQ-A-250/4	L97
	BAR AND ROD	2024-T4	QQ-A-225/6	L64 [B]
		2024-T6	QQ-A-225/6	L65
	CASTING	A357.0	MIL-A-21180 CLASS II	L92
		A356.0	MIL-A-21180	BS 1490
	DIE FORGING	2014-T6	QQ-A-367	L77
TITANIUM	SHEET	COMPURE – 70	MIL-T-9046, TYPE 1, COMP B	TA6
		COMPURE - 60	MIL-T-9046, TYPE 1, COMP C	DTD5023
		Ti-6Al-4V	MIL-T-9046	BS 2TA.10
	BAR FORGING	COMPURE – 70	MIL-T-9047, COMP 1	TA9
	FORGING	Ti-6Al-4V	MIL-F-83142, COMP 6	DTD5323
	CASTING	Ti-6Al-4V	MIL-T-81915, TYPE III, COMP A	DTD5363
	BAR	Ti-6Al-2Sn-4Zr-2Mo	MIL-T-9047	BS TA.45
	FORGING	Ti-6Al-2Sn-4Zr-2Mo	AMS 4976	BS TA.44
CARBON STEEL	SHEET/PLATE/BAR	1020	AMS 5032	040A20
	BAR/ROD	1040	060A40	MIL-S-11310
	SHEET/BAR	1080	AMS 5110	80CS
ALLOY STEEL	SHEET/PLATE	4340	AMS 6359	817M40
		4130	AMS 6348	708A30
		4140	AMS 6395	708M40
	BAR	52100	AMS 6440	534A99
		300M	AMS6417	S155A
	FORGING	4340 (QUENCH AND TEMPER – HT 125-145 KSI)	MIL-S-5000B, COMP F	BSS154
CORROSION RESISTANT STAINLESS STEEL	SHEET/PLATE	301	MIL-S-5059	301S21
		302	MIL-S-5059	302S25
	BAR/ROD	303	AMS 5640, TYPE 1	303S22
	SHEET/PLATE	304	AMS 5501	304S15
		304L	MIL-S-4043	304S11
		316	AMS 5524	316S31
		321	QQ-S-766	321S20
		347	AMS 5512	347S31
		410	410S21	AMS 5504
		15-5PH	AMS 5862	15Cr5Ni
		17-4PH	AMS 5604	17Cr4Ni
		17-7PH	AMS 5528	301S81
		A286	AMS 5726	BS 1503
	BAR	420	AMS 5506	420S29
		431	AMS 5628	431S29
NICKEL	SHEET/PLATE	NICKEL ALLOY 625	AMS 5599	BS 3076
		NICKEL ALLOY X-750	AMS 5542	H505
COPPER	SHEET	Al-Ni-Bronze (C630000)	AMS 4640	BS 2870
	BAR/ROD/PLATE/ TUBE/FORGING	Cu-Be (C17200)	AMS 4650	CB101

NOTES

[A] ADD 10% THICKNESS FOR EQUIVALENT STRENGTH

[B] FOR t LESS THAN 4.0 INCHES ADD 10% EXTRA THICKNESS. FOR t GREATER THAN 4.0 INCHES ADD 20% EXTRA THICKNESS. t = MATERIAL THICKNESS

Approximately Equivalent Strength Materials
Figure 1

BOEING PROPRIETARY - Copyright © - Unpublished Work - See title page for details.

SHAPE	INITIAL MATERIAL	REPLACEMENT MATERIAL
SHEET 0.016 TO 0.125	CLAD 2024-T42 [F]	CLAD 2024-T3 2024-T3 CLAD 7075-T6 [A] 7075-T6 [A]
	CLAD 2024-T3	2024-T3 CLAD 7075-T6 [A] 7075-T6 [A]
	CLAD 7075-T6	7075-T6
FORMED OR EXTRUDED SECTION	2024-T42 [F]	7075-T6 [A] [B]

MOST AVAILABLE STANDARD ALUMINUM SHEET METAL GAGES	
0.012	0.071
0.016	0.080
0.020	0.090
0.025	0.100
0.032	0.125
0.036	
0.040	0.160
0.045	
0.050	0.190
0.056	
0.063	0.200

SHEET MATERIAL TO BE REPLACED	MATERIAL REPLACEMENT FACTOR									
	7075-T6	CLAD 7075-T6	2024-T3		CLAD 2024-T3		2024-T4 2024-T42 [F]		CLAD 2024-T4 CLAD 2024-T42 [F]	
	[C]	[C] [H]	[D]	[E]	[D]	[E]	[D]	[E]	[D]	[E]
7075-T6	1.00	1.10	1.20	1.78	1.30	1.83	1.20	1.78	1.24	1.84
CLAD 7075-T6	1.00	1.00	1.13	1.70	1.22	1.76	1.13	1.71	1.16	1.76
2024-T3	1.00 [A]	1.00 [A]	1.00	1.00	1.09	1.10	1.00	1.10	1.03	1.14
CLAD 2024-T3	1.00 [A]	1.00 [A]	1.00	1.00	1.00	1.00	1.00	1.00	1.03	1.00
2024-T42	1.00 [A]	1.00 [A]	1.00	1.00	1.00	1.00	1.00	1.00	1.00	1.14
CLAD 2024-T42	1.00 [A]	1.00 [A]	1.00	1.00	1.00	1.00	1.00	1.00	1.00	1.00
7178-T6	1.28	1.28	1.50	1.90	1.63	2.00	1.86	1.90	1.96	1.98
CLAD 7178-T6	1.08	1.18	1.41	1.75	1.52	1.83	1.75	1.75	1.81	1.81
5052-H34 [G] [H]	1.00 [A]	1.00 [A]	1.00	1.00	1.00	1.00	1.00	1.00	1.00	1.00

NOTES

- ALL DIMENSIONS ARE IN INCHES, UNLESS GIVEN DIFFERENTLY.
- IT IS POSSIBLE THAT MORE PROTECTION FROM CORROSION WILL BE NECESSARY WHEN BARE MATERIAL IS USED TO REPLACE CLAD MATERIAL. REFER TO 51-10-2.
- IT IS POSSIBLE FOR THE MATERIAL REPLACEMENT FACTOR TO BE A LOWER VALUE FOR A SPECIFIC LOCATION ON THE AIRPLANE. TO GET THAT VALUE, CONTACT BOEING FOR A CASE BY CASE ANALYSIS.
- REFER TO FIGURE 3 FOR MINIMUM BEND RADII.
- EXAMPLE:
  TO REPLACE 0.040 THICK 7075-T6 WITH CLAD 7075-T6, MULTIPLY THE GAGE BY THE MATERIAL REPLACEMENT FACTOR TO GET THE REPLACEMENT GAGE 0.040 X 1.10 = 0.045.

[A] THESE MATERIALS CANNOT BE USED AS REPLACEMENTS FOR THE INITIAL MATERIAL IN AREAS THAT ARE PRESSURIZED. THEY ALSO CANNOT BE USED IN THE WING INTERSPAR STRUCTURE OR THE WING CENTER SECTION STRUCTURE.

[B] USE THE NEXT THICKER STANDARD GAGE WHEN YOU USE A FORMED SECTION AS A REPLACEMENT FOR AN EXTRUSION.

[C] FOR ALL GAGES OF FLAT SHEET AND FORMED SECTIONS.

[D] FOR FLAT SHEET LESS THAN 0.071 THICK.

[E] FOR FLAT SHEET 0.071 THICK AND THICKER, AND FOR FORMED SECTIONS.

[F] 2024-T4 AND 2024-T42 ARE EQUIVALENT

[G] A COMPOUND TO GIVE PROTECTION FROM CORROSION MUST BE APPLIED TO BARE MATERIAL THAT IS USED TO REPLACE 5052-H34.

[H] FOR STRUCTURAL BONDS, CLAD 7075-T6 CANNOT BE A REPLACEMENT FOR 5052-H34.

Material Substitution
Figure 2

MINIMUM INNER BEND RADII					
GAGE	ALUMINUM				
	2024-0 5052-H34	2024-T3/T4	5052-0	7178-0 7075-0	7178-T6 7075-T6
[A]	0.03	0.06	0.03	0.03	0.09
0.016	0.03	0.06	0.03	0.03	0.09
0.018	0.03	0.06	0.03	0.03	0.12
0.020	0.03	0.06	0.03	0.03	0.12
0.022	0.06	0.09	0.03	0.06	0.12
0.025	0.06	0.09	0.03	0.06	0.12
0.028	0.06	0.09	0.03	0.06	0.16
0.032	0.06	0.12	0.03	0.06	0.16
0.036	0.06	0.16	0.06	0.06	0.19
0.040	0.06	0.16	0.06	0.06	0.19
0.045	0.09	0.19	0.06	0.09	0.25
0.050	0.09	0.19	0.06	0.09	0.25
0.056	0.12	0.22	0.06	0.12	0.28
0.063	0.12	0.22	0.06	0.12	0.31
0.071	0.12	0.28	0.09	0.12	0.38
0.080	0.16	0.34	0.09	0.19	0.44
0.090	0.19	0.38	0.09	0.19	0.50
0.100	0.22	0.44	0.12	0.22	0.62
0.112	0.25	0.50	0.12	0.28	0.75
0.125	0.25	0.56	0.12	0.28	0.88
0.140	0.34	0.62	0.12	0.38	1.00
0.160	0.38	0.75	0.16	0.44	1.12
0.180	0.44	0.88	0.19	0.50	1.25
0.190	0.50	0.88	0.19	0.56	1.25

NOTES

[A] ALL GAGES BELOW 0.016

Minimum Inner Radii for Straight Line Bends in Aluminum Sheet
Figure 3

THICKNESS	MINIMUM BEND RADII	
	Ti-6Al-4V ANNEALED COLD FORMED	Ti-6Al-4V ANNEALED HOT FORMED [A]
0.016	0.12	0.06
0.020	0.16	0.09
0.025	0.19	0.09
0.032	0.22	0.09
0.036	0.25	0.12
0.040	0.25	0.12
0.050	0.31	0.12
0.056	0.34	0.16
0.063	0.38	0.16
0.071	0.44	0.19
0.080	0.50	0.19
0.090	0.56	0.22
0.100	0.62	0.25
0.112	0.69	0.25
0.125	0.75	0.28
0.140	0.88	0.34
0.160	1.00	0.34
0.180	1.13	0.41
0.190	1.63	0.41
0.200	2.00	0.44

STRESS RELIEVING TEMPERATURE °F (°C)	MINIMUM DEPTH OF METAL TO BE REMOVED (INCH)			
	LENGTH OF TIME FOR STRESS RELIEVING			
	30-60 MINUTES	1-2 HOURS	2-6 HOURS	6-10 HOURS
1201-1300 (649-704)	0.001	0.001	0.002	0.003
1301-1400 (705-760)	0.001	0.002	0.003	0.003
1401-1500 (761-816)	0.002	0.003	0.004	0.006

NOTES

- DIMENSIONS ARE IN INCHES, EXCEPT AS NOTED.

[A] THE MINIMUM BEND RADII FOR HOT FORMING TI-6AL-4V IS APPLICABLE WHEN YOU USE A HEATED DIE AND THE PART TEMPERATURE IS KEPT ABOVE 1200°F (649°C).

Minimum Inner Radii for Straight Line Bends in Titanium Sheet
Figure 4

BOEING PROPRIETARY - Copyright © - Unpublished Work - See title page for details.

MANUFACTURER	MODEL	SPEED (RPM)	DRILL CAPACITY (INCH)	HANDLE TYPE
COOPER BUCKEYE [A]	31D-101-38	5200	1/4	OFFSET
	21D-501	4750	1/4	STRAIGHT
	21A-621	4750	1/4	90
	46A-508	540	1/2	90
DEUTSCH-APT [B]	9824-4249	4950	1/4	OFFSET
	9328-4251	450	1/2	OFFSET
	9359	450/2000	1/2	OFFSET
	3951-5003	1000	3/8	STRAIGHT
	8191-8198-8201	4500	1/4	45
COOPER DOTCO [A]	15CSL94-51	1600	3/8	OFFSET
	55CSS92-54	2150	1/4	OFFSET

DRILL MOTORS
TABLE I

TOOL TYPE	MANUFACTURER	MODEL
ROLLER SHEARS	COOPER-BUCKEYE [A]	31U-113
PORTABLE NIBBLER	COOPER-BUCKEYE [A]	31NR-502
SABER SAW	COOPER-BUCKEYE [A]	31ZK-548

CUTTING TOOLS
TABLE II

TITANIUM THICKNESS (INCH)	BLADE PITCH (TEETH/INCH)	CUTTING RATE (INCH/MINUTE)	BLADE LIFE (INCH)
0.049	32	10	24
0.070	24	5	100
0.125	18	1	7
THIS DATA IS FOR HIGH-SPEED STEEL BLADES THAT CUT AT A RATE OF 90 SURFACE FEET PER MINUTE. USE A WATER SOLUBLE OIL SPRAY MIST LIKE DARACOOL 760 WHEN YOU CUT TITANIUM WITH A SABER SAW. THE FORCE NECESSARY TO MANUALLY CUT WITH A SABER SAW IS LARGE. THIS FORCE INCREASES AS THE SHEET THICKNESS INCREASES. THE LARGEST THICKNESS TITANIUM SHEET THAT CAN BE EASILY CUT IS 0.070 INCH.			

SABER SAW BLADE DATA
TABLE III

NOTES

[A] COOPER INDUSTRIES
COOPER POWER TOOLS DIVISION
P.O. BOX 1410
LEXINGTON, SC 29071-1410

[B] DEUTSCH AMERICAN PNEUMATIC TOOL CO.
14710 MAPLE AVENUE
GARDENA, CA 90248-1934

Equipment Used to Hand Drill and Cut Titanium
Figure 5

MINIMUM INNER BEND RADII										
GAGE	CORROSION RESISTANT STEEL								ALLOY STEEL	
	18-8 CRES (300 SERIES)					15-5 PH [D]	17-7 PH [A] [B]		1020 1025 4130 8630 ANLD	4130 8630 NORM
	ANLD	QTR HARD	HALF HARD	THREE QTR HARD	FULL HARD	SOLUTION TREATED	COND A	COND TH1050		
[C]	0.06	0.06	0.06	0.09	0.09	—	0.03	0.16	0.06	0.06
0.016	0.06	0.06	0.06	0.09	0.09	—	0.03	0.16	0.06	0.06
0.018	0.06	0.06	0.06	0.09	0.11	—	0.03	0.16	0.06	0.06
0.020	0.06	0.06	0.06	0.09	0.12	—	0.03	0.16	0.06	0.06
0.022	0.06	0.06	0.06	0.09	0.14	—	0.03	0.16	0.06	0.06
0.025	0.06	0.06	0.06	0.09	0.16	—	0.03	0.16	0.06	0.06
0.028	0.06	0.06	0.09	0.12	0.19	—	0.03	0.19	0.06	0.09
0.032	0.06	0.06	0.09	0.12	0.19	—	0.03	0.25	0.06	0.09
0.036	0.06	0.09	0.12	0.16	0.22	—	0.03	0.31	0.09	0.12
0.040	0.06	0.09	0.12	0.16	0.25	—	0.06	0.31	0.09	0.12
0.045	0.06	0.09	0.12	0.19	0.31	—	0.06	0.38	0.09	0.16
0.050	0.06	0.09	0.12	0.22	0.31	0.19	0.06	0.38	0.09	0.16
0.056	0.06	0.12	0.16	0.22	0.34	0.22	0.06	0.44	0.09	0.19
0.063	0.06	0.12	0.19	0.25	0.38	0.22	0.09	0.50	0.09	0.19
0.071	0.09	0.16	0.22	0.31	0.44	0.25	0.09	0.62	0.09	0.22
0.080	0.09	0.16	0.22	0.34	0.50	0.38	0.09	0.62	0.12	0.25
0.090	0.09	0.19	0.25	0.38	0.62	0.44	0.09	0.75	0.12	0.28
0.100	0.12	0.22	0.28	0.44	0.62	0.44	0.12	0.88	0.16	0.31
0.112	0.12	0.22	0.31	0.50	0.75	0.50	0.12	—	0.16	0.34
0.125	0.12	0.25	0.34	0.50	0.75	0.63	0.12	—	0.16	0.38
0.140	0.16	0.31	0.38	0.62	0.88	0.63	0.16	—	0.19	0.38
0.160	0.16	0.34	0.44	0.62	1.00	0.63	0.16	—	0.22	0.44
0.180	0.19	0.38	0.50	0.75	1.12	0.75	0.19	—	0.28	0.50
0.190	0.19	0.38	0.50	0.88	1.25	0.75	0.19	—	0.34	0.50

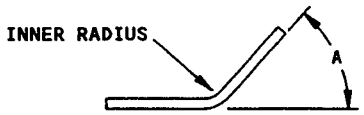

Minimum Inner Radii for Straight Line Bends in Sheet Steel
Figure 6 (Sheet 1)

[A] THESE LIMITS APPLY TO 17-7 PH CRES:

USE A MAXIMUM THICKNESS OF 0.090 INCH WHEN HEAT TREATED TO 150-170 KSI.

USE A MAXIMUM THICKNESS OF 0.063 INCH WHEN HEAT TREATED TO 180-200 KSI.

NOTE: 15-5 PH CRES STEEL IS RECOMMENDED FOR A SHEET THICKNESS OF 0.050 INCH OR HIGHER.

[B] AFTER YOU FORM THE RADIUS, DO A DYE PENETRANT INSPECTION OF THE RADIUS. REFER TO SOPM 20-20-02.

[C] ALL GAGES BELOW 0.016

[D] IF ANGLE "A" IS LARGER THAN 90° YOU MUST DO A MAGNETIC PARTICLE INSPECTION. REFER TO SOPM 20-20-01.

Minimum Inner Radii for Straight Line Bends in Sheet Steel
Figure 6 (Sheet 2)

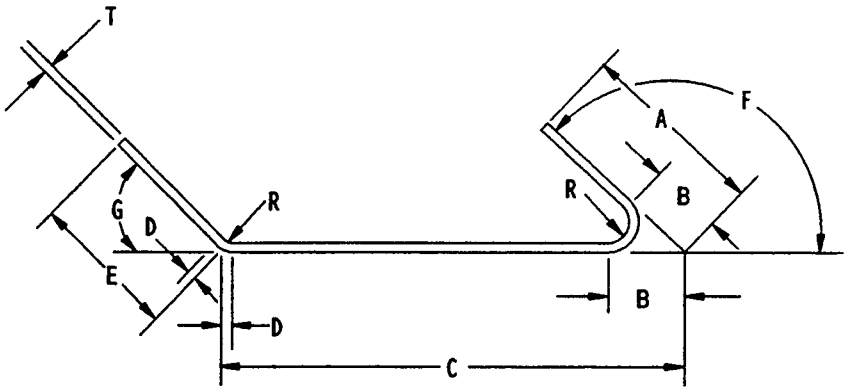

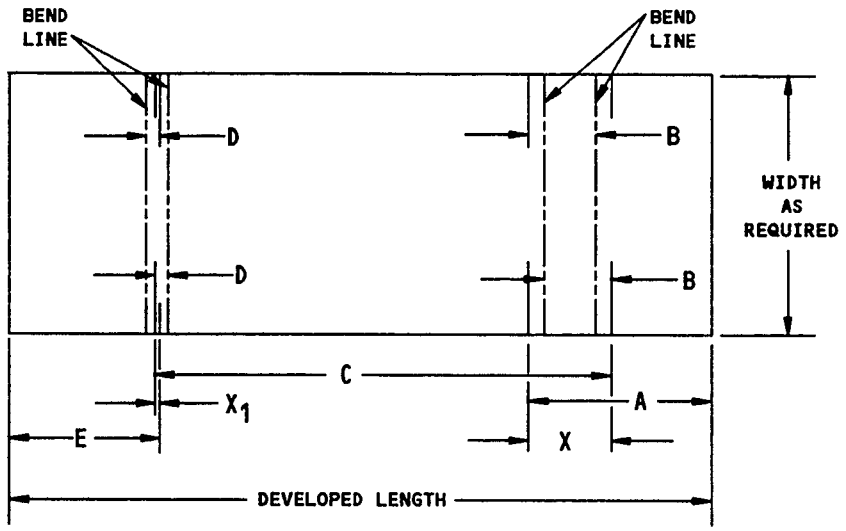

FLAT PATTERN

EXAMPLE:

A = 1.20
B = 0.453 (SEE FIGURE 8)
C = 3.00
D = 0.078 (SEE FIGURE 8)
E = 1.00
F = 135°
G = 45°
T = 0.063
R = 0.12 (SEE FIGURE 3)
X = 0.55 (SEE FIGURE 9)
X_1 = 0.035 (SEE FIGURE 9)

DEVELOPED LENGTH = 1.20 - 0.55 + 3.00 - 0.035 + 1.00 = 4.615 USE 4.62

Flat Pattern Layout
Figure 7

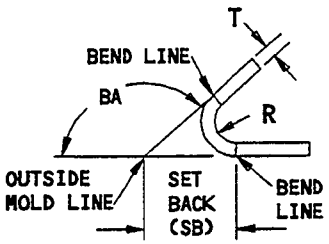

SB = DISTANCE FROM MOLD LINE TO BEND LINE

BA = BEND ANGLE

R = BEND RADIUS

T = THICKNESS

1. ENTER CHART AT BOTTOM ON APPROPRIATE SCALE USING SUM OF T + R
2. READ UP TO BEND ANGLE
3. DETERMINE SET BACK FROM CORRESPONDING SCALE ON LEFT

EXAMPLE:

T (0.063) + R (0.12) = 0.183
BA = 135°
SET BACK = 0.453

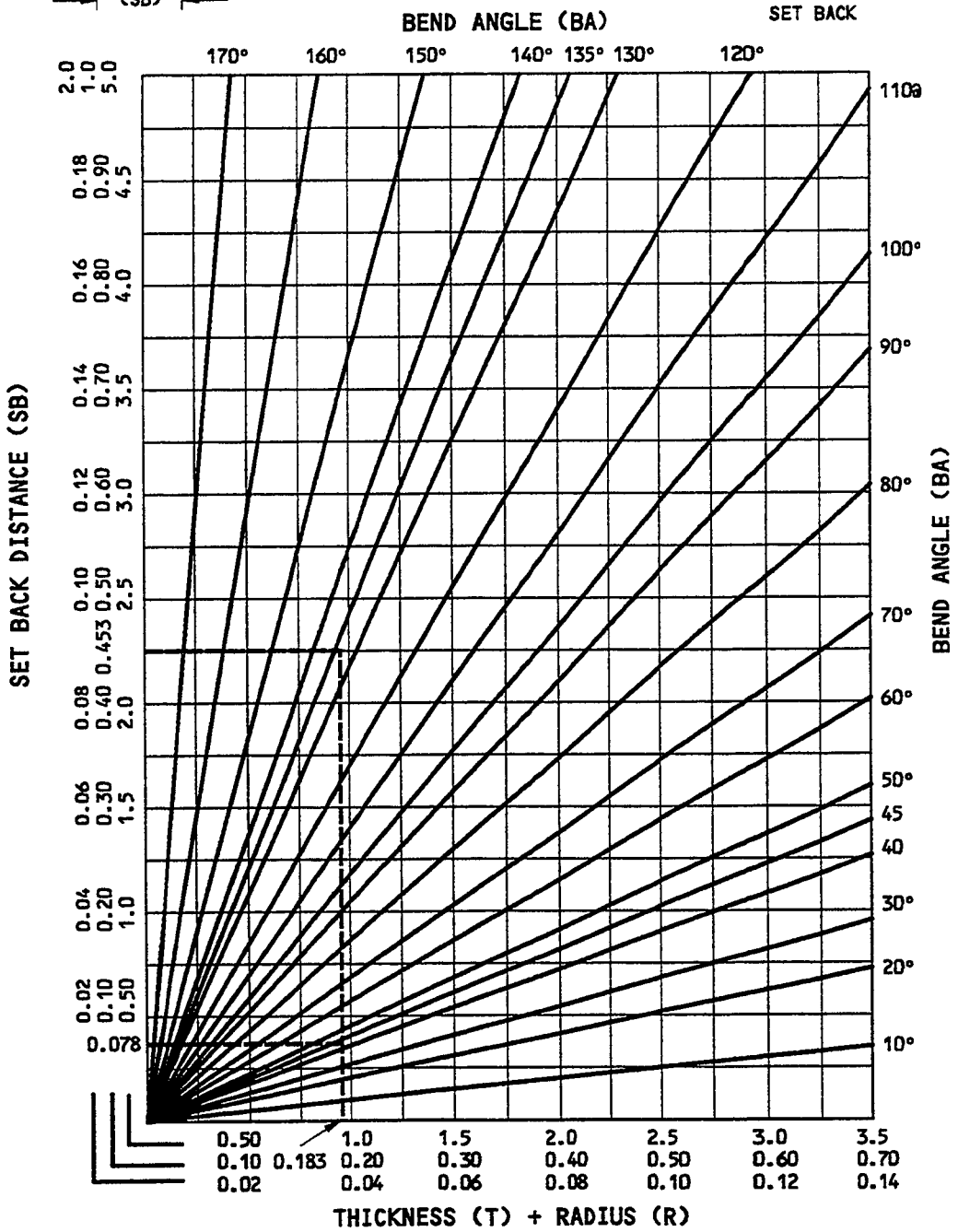

Flat Pattern Set Back Graph
Figure 8

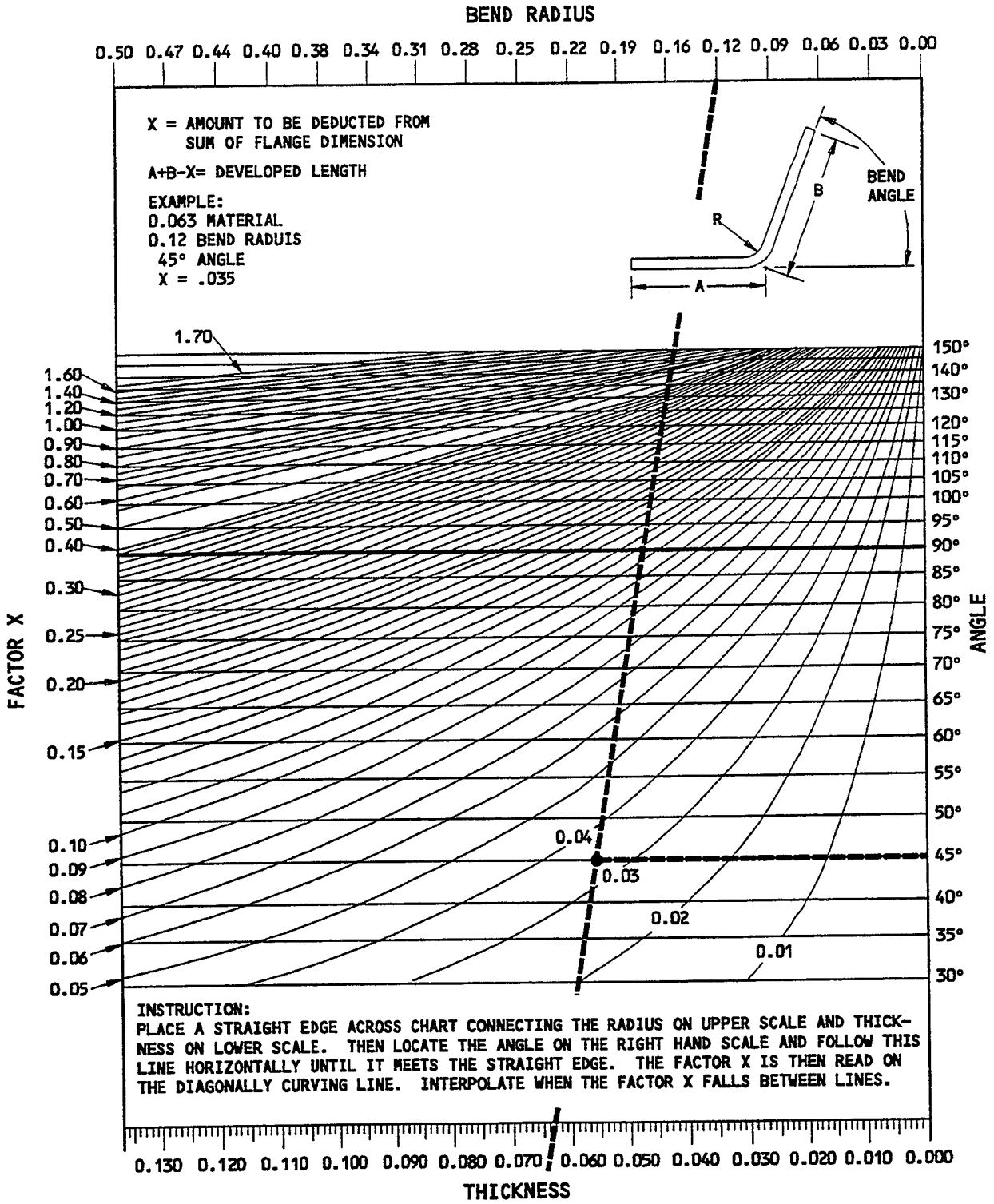

Developed Length Graph
Figure 9

E68365

SHIM THICKNESS AS A PERCENTAGE OF THE FASTENER DIAMETER	FASTENER TYPE AND MATERIAL	NON-STRUCTURAL SHIM [B]	STRUCTURAL SHIM [A]
LESS THAN 21%	RIVETS (ALUMINUM)	X	
21% AND GREATER			X
LESS THAN 34%	SHEAR LOCK OR HI-LOKS BOLTS (STEEL OR TITANIUM)	X	
34% AND GREATER			X
LESS THAN 41%	TENSION LOCKBOLTS BOLTS OR HI-LOKS (STEEL OR TITANIUM)	X	
41% AND GREATER			X

NOTES

- EXAMPLE CALCULATION:
  FOR A 0.040 INCH THICK SHIM AND A 5/32 (0.1562) INCH DIAMETER ALUMINUM ALLOY RIVET, THE SHIM THICKNESS AS A PERCENTAGE OF THE FASTENER DIAMETER

  $$= \frac{\text{SHIM GAGE}}{\text{FASTENER DIAMETER}} \times 100$$

  $$= \frac{0.040 \text{ INCH}}{0.1562 \text{ INCH}} \times 100$$

  $$= 25.6\%$$

  THUS, A STRUCTURAL SHIM IS NECESSARY SINCE THE MAXIMUM SHIM THICKNESS AS A PERCENTAGE OF THE FASTENER DIAMETER OF AN ALUMINUM ALLOY RIVET IS 20%.

[A] THE SHIM MUST BE FASTENED TO THE REPAIR PART OR THE INITIAL PART. THE STRUCTURAL SHIM IS USED TO PREVENT MOVEMENT THAT COULD POSSIBLY BEND THE FASTENER.

[B] THE SHIM CAN BE BONDED WITH ADHESIVE BMS 5-95 OR BAC5010, TYPE 70 TO THE REPAIR PART FOR CONVENIENCE OF INSTALLATION.

Instructions for the Use of Shims
Figure 10

BOEING PROPRIETARY - Copyright © - Unpublished Work - See title page for details.

SPECIFIED THICKNESS		SPECIFIED WIDTH - INCHES											
		UP THRU 39.37	OVER 39.37 THRU 47.24	OVER 47.24 THRU 55.12	OVER 55.12 THRU 59.06	OVER 59.06 THRU 70.87	OVER 70.87 THRU 78.74	OVER 78.74 THRU 86.61	OVER 86.61 THRU 98.43	OVER 98.43 THRU 118.11	OVER 118.11 THRU 137.80	OVER 137.80 THRU 157.48	OVER 157.48 THRU 177.17
OVER	THRU	TOLERANCE - INCH, PLUS AND MINUS											
0.047	0.063	0.0020	0.0020	0.0030	0.0030	0.0030	0.0035	0.0035	0.009	0.011	0.013	---	---
0.063	0.079	0.0020	0.0020	0.0030	0.0035	0.0035	0.0035	0.0035	0.010	0.013	0.015	---	---
0.079	0.096	0.0025	0.0025	0.0035	0.0040	0.0040	0.0045	0.0045	0.011	0.015	0.018	---	---

THICKNESS TOLERANCE OF ALUMINUM ALLOY SHEETS
TABLE IV

SPECIFIED THICKNESS INCH	OVER 24.00 THRU 32.00	OVER 32.00 THRU 40.00	OVER 40.00 THRU 48.00	OVER 48.00 THRU 60.00	OVER 60.00 THRU 70.00	OVER 70.00 THRU 80.00	OVER 80.00 THRU 90.00
TOLERANCE - INCH, PLUS OR MINUS							
0.0528 THRU 0.0710	0.006	0.006	0.006	0.007	0.007	---	---
OVER 0.0710 THRU 0.0821	0.007	0.007	0.007	0.007	0.008	0.008	---

THICKNESS TOLERANCE OF ALLOY STEEL SHEETS
TABLE V

SPECIFIED THICKNESS INCH	SPECIFIED WIDTH - INCH	
	24.00 THRU 48.00	OVER 48.00
TOLERANCE - INCH, PLUS OR MINUS		
OVER 0.040 THRU 0.058	0.004	0.005
OVER 0.058 THRU 0.072	0.005	0.006
OVER 0.072 THRU 0.083	0.005	0.007

THICKNESS TOLERANCE OF CORROSION
RESISTANT STEEL AND TITANIUM ALLOY SHEETS
TABLE VI

NOTE: Figure 11 Table I was obtained from the American National Standard (ANSI H35.2) for Dimensional Tolerances of aluminum mill products. Figure 11 Tables II and III were taken from the Aerospace Materials Specifications (AMS 2252 and AMS 2242, respectively).

Thickness Tolerances of Different Sheet Materials
Figure 11

BOEING PROPRIETARY - Copyright © - Unpublished Work - See title page for details.

EXTRUSIONS AND FORMED SECTIONS

1. General

   A. This subject contains information pertaining to extrusions and formed sections which are specified in repair designs contained in this manual. These sections are arranged in numerical sequence by AND and BAC part numbers. Specific page numbers can be identified by reference to the index.

   B. Where available the manufacturers die numbers have been specified.

EXTRUSION NO.	PAGE NO.	EXTRUSION NO.	PAGE NO.	EXTRUSION NO.	PAGE NO.	EXTRUSION NO.	PAGE NO.
AND10133		BAC1505		BAC1518			
-1001	3	-100538	10	-396	19		
		-100549	10	-401	19		
AND10134		-100555	11	-409	19		
-1001	4	-100556	11	-551	19		
AND10136	5	-100557	11				
-2001							
AND10137		-199567	11	BAC1520			
-1609	6	-100568	11	-792	20		
		-100569	11	-841	20		
BAC1493		-100583	11	-843	20		
-204	7	-100590	11	-1331	21		
-209	7			-1429	20		
-412	7	BAC1506		-1430	21		
-479	7	-1524	12	-1432	22		
-513	7	-1709	12	-1433	22		
-520	7	-1724	13	-1434	23		
-521	7	-1740	13				
-547	7	-1752	12				
-574	7	-1795	12				
BAC1498		BAC1509					
-107	8	-100146	14				
-108	8						
-130	8	BAC1510					
-132	8	-486	15				
-133	8	-491	15				
-138	8						
-139	8	BAC1512					
-141	8	-465	16				
-155	8						
-156	8	BAC1514					
-157	8	-1161	17				
-158	8						
-159	8	-1469	18				
-161	8	-1479	18				
-162	8	-1480	18				
-163	8	-1493	18				
BAC1503							
-1591	9						
-100055	9						

Extrusions and Formed Sections - Index
Figure 1

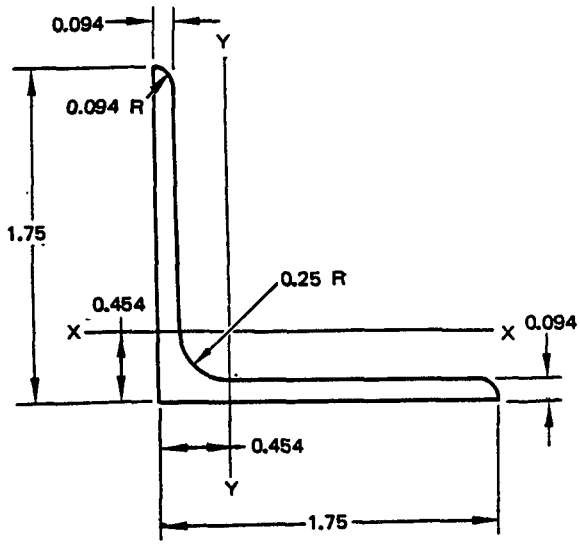

DASH NO.	AREA	Ixx Iyy
1601	0.330	0.0947

Extrusions - AND10133
Figure 2

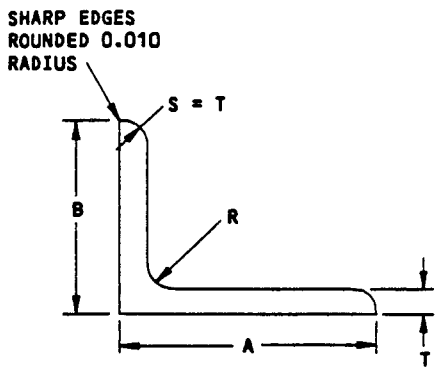

AND10134

DASH NO.	A	B	T	R	AREA (in. 2)
1201	1.250	0.750	0.063	0.125	0.124
1601	1.750	1.000	0.125	0.156	0.327

ALL DIMENSIONS ARE IN INCHES EXCEPT AS NOTED

Extrusions - AND10134
Figure 3

275723

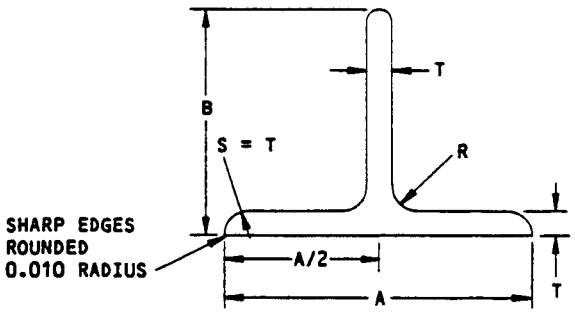

AND10136

DASH NO.	A	B	T	R	AREA (in.^{2})
2001	2.000	1.000	0.078	0.125	0.231

ALL DIMENSIONS ARE IN INCHES EXCEPT AS NOTED

Extrusions - AND10136
Figure 4

275715

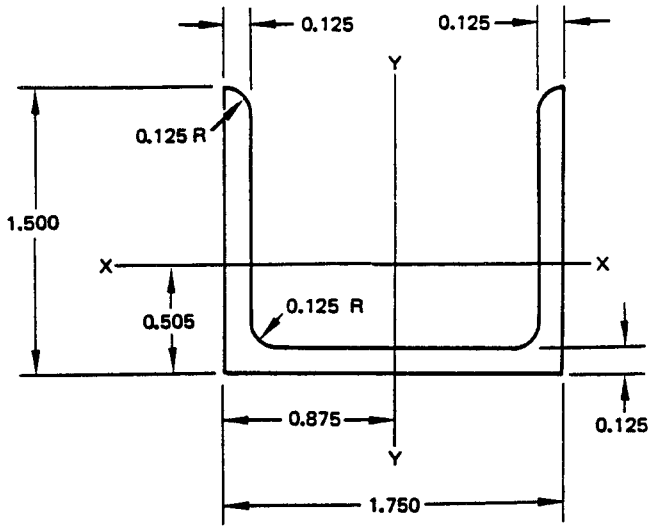

DASH NO.	AREA	Ixx	Iyy
1609	0.563	0.1243	0.2826

Extrusions - AND10137
Figure 5

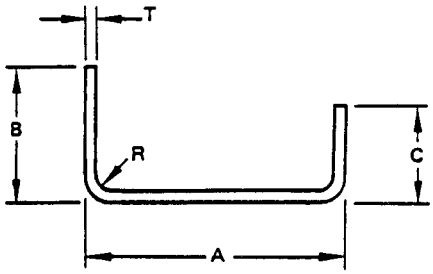

DASH NO.	AREA	A	B	C	T	R
204	0.114	1.00	1.00	1.00	0.040	0.06
209	0.1384	1.00	1.00	1.00	0.051	0.190
412	0.110	1.00	1.00	1.00	0.04	0.16
479	0.117	0.75	1.16	1.16	0.04	0.06
513	0.0654	0.64	1.00	0.20	0.040	0.12
520	0.127	0.75	1.00	1.00	0.050	0.09
521	0.0815	0.64	1.00	0.20	0.05	0.09
545	0.0875	0.66	1.00	0.30	0.050	0.09
574	0.1086	0.60	1.00	0.25	0.063	0.13

Formed Sections - BAC1493
Figure 6

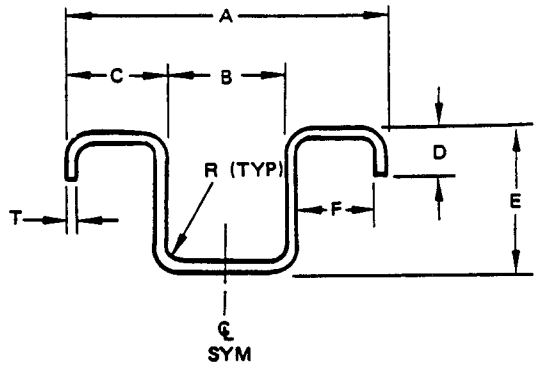

DASH NO.	AREA	A	B	C	D	E	F	T	R
107	0.1783	2.24	0.76	0.74	0.20	1.19		0.04	0.13
108	0.1443	2.24	0.76	0.74	0.20	1.19		0.032	0.13
138	0.1559		1.00		0.26	1.25	0.70	0.032	0.19
139	0.1752		1.00		0.26	1.25	0.70	0.036	0.19
141	0.2218		1.00		0.30	1.25	0.70	0.045	0.19
155			0.90		0.20	1.25	0.62	0.028	0.12
156			0.90		0.20	1.25	0.62	0.032	0.12
157			0.90		0.20	1.25	0.62	0.036	0.12
158			0.90		0.20	1.25	0.62	0.040	0.12
159			0.90		0.20	1.25	0.62	0.045	0.12
160			0.90		0.20	1.25	0.62	0.050	0.12
161			0.90		0.20	1.25	0.62	0.056	0.12
162			0.90		0.20	1.25	0.62	0.063	0.12
163			0.90		0.20	1.25	0.62	0.071	0.12

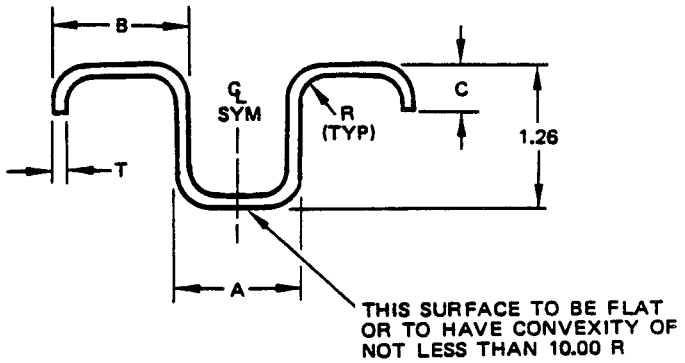

DASH NO.	AREA	A	B	C	T	R
130	0.2594	0.75	0.90	0.30	0.050	0.13
131	0.4788	0.99	1.10	0.40	0.090	0.19
132	0.3469	0.99	1.10	0.35	0.063	0.16

Formed Sections - BAC1498
Figure 7

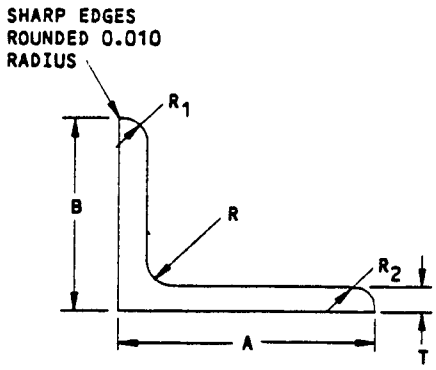

BAC1503

DASH NO.	A	B	T	R	R_1	R_2	AREA (in.^{2})
1591	0.75	1.50	0.062	0.125			0.139
100055	1.25	1.38	0.080	0.12			0.207

DASH NO.	DIE NO.
1591	22990 [A], 18215 [B]
100055	59805 [A]

ALL DIMENSIONS ARE IN INCHES EXCEPT AS NOTED

NOTES

[A] ALUMINUM COMPANY OF AMERICA
P.O. BOX 96000
BELLEVUE, WA 98009

[B] REYNOLDS METALS, EXTRUSIONS
P.O. BOX 3069
TORRANCE, CA 90509

Extrusions - BAC1503
Figure 8

275720

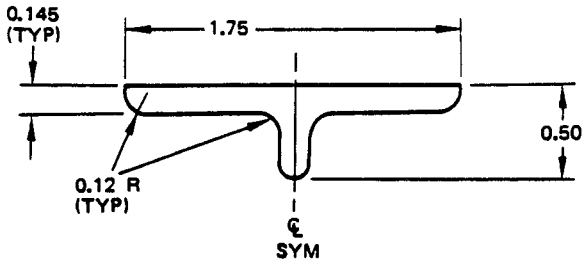

DASH NO.	DIE NO.	AREA
100538	152554 [A]	0.406

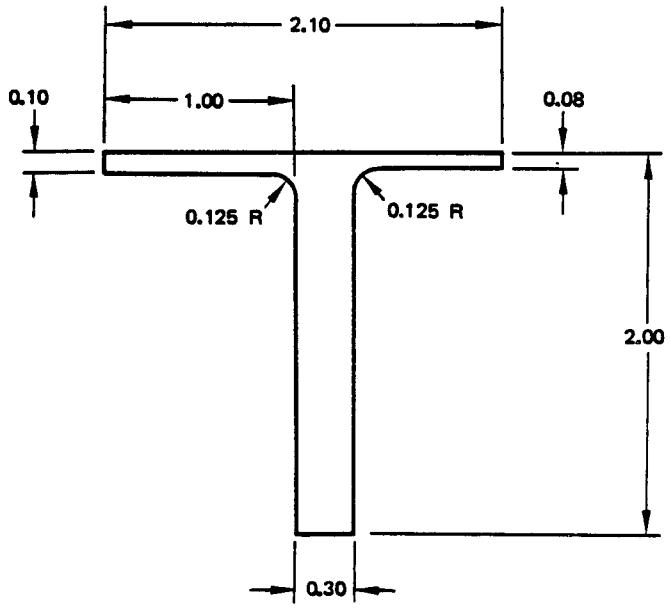

DASH NO.	DIE NO.	AREA
100549	15224 [A]	0.769

NOTES

[A] ALUMINUM COMPANY OF AMERICA
P.O. BOX 96000
BELLEVUE, WA. 98009

Extrusions - BAC1505
Figure 9 (Sheet 1)

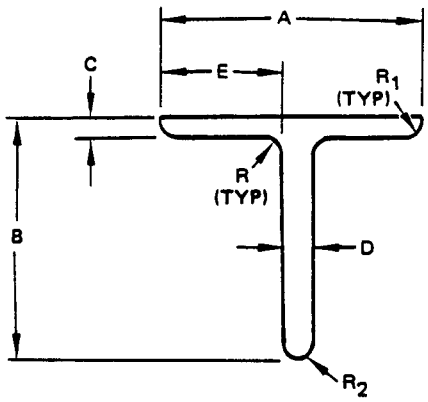

DASH NO.	DIE NO.	AREA	A	B	C	D	E	R	R1	R2
100556	53009 [A]	0.148	1.54	1.35	0.05	0.05	0.745	0.12	0.016	0.016
100557			1.66	1.31	0.07	0.07	0.89	0.12	0.016	0.016
100567	53011 [A]	0.129	1.74	1.39	0.04	0.04	0.95	0.12	0.016	0.016
100568	159464 [B]	0.231	2.45	1.37	0.06	0.06	1.02	0.12	0.016	0.016
100583	53663 [C]	0.258	2.22	1.50	0.07	0.07	0.97	0.09	0.031	0.031
100590			3.20	1.35	0.05	0.05	1.60	0.12	0.016	0.016

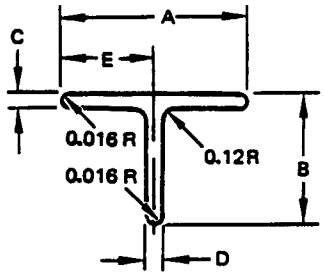

DASH NO.	DIE NO.	AREA	A	B	C	D	E
100555	53003 [A]	0.120	1.54	1.35	0.04	0.04	0.77
100569			2.80	1.35	0.10	0.10	1.40

NOTES

[A] REYNOLDS METALS, EXTRUSIONS
P.O. BOX 3069
TORRANCE, CA 90509

[B] ALUMINUM COMPANY OF AMERICA
P.O. BOX 96000
BELLEVUE, WA 98009

[C] INTERNATIONAL LIGHT METALS
(FORMERLY MARTIN MARIETTA ALUMINUM CO.)
19200 S. WESTERN AVENUE
TORRANCE, CA 90509

Extrusions - BAC1505
Figure 9 (Sheet 2)

DASH NO.	HARVEY DIE NO.	AREA
1524	36539	0.1654

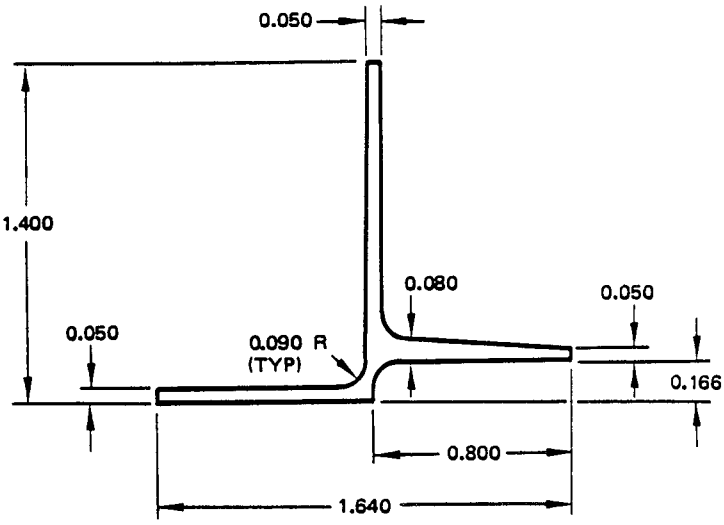

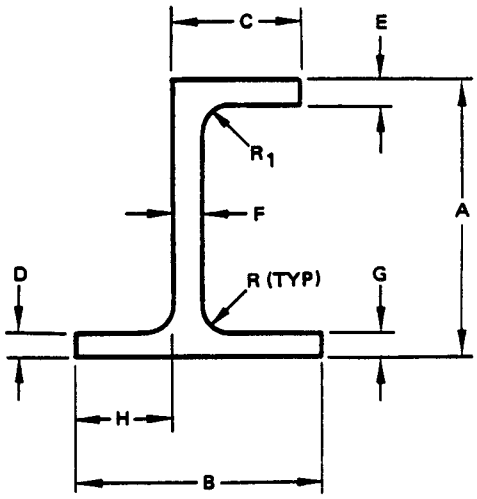

DASH NO.	DIE NO.	AREA	A	B	C	D	E	F	G	H	R	R1
1709	41595 [A]		2.56	2.50	1.20	0.27	0.27	0.53	0.27	1.15	0.125	0.125
1752	181535 [B]	3.385	2.08	2.87	1.67	0.71	0.45	0.61	0.71	1.20	0.25	0.25
1795	181505 [B]	4.735	2.20	4.90	1.80	0.65	0.59	0.55	0.65	2.24	0.25	0.25

NOTES

[A] REYNOLDS METALS, EXTRUSIONS
P.O. BOX 3069
TORRANCE, CA 90509

[B] ALUMINUM COMPANY OF AMERICA
P.O. BOX 96000
BELLEVUE, WA 98009

Extrusion - BAC1506
Figure 10 (Sheet 1)

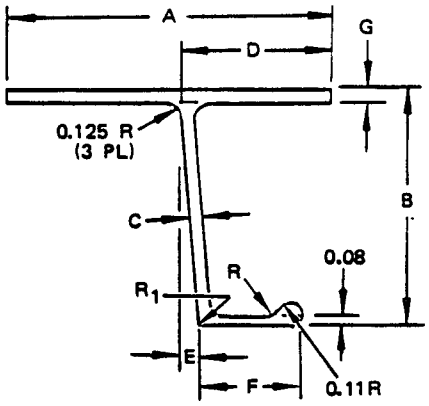

DASH NO.	DIE NO.	AREA	A	B	C	D	E	F	G	R	R_1
1724	41837 [A]	0.750	3.05	2.50	0.10	1.62	0.427	1.11	0.13	0.125	
1740	41932 [A]	0.667	2.70	2.40	0.10	1.40		1.15	0.12	0.06	0.06
	154424 [B]										

NOTES

[A] REYNOLDS METALS, EXTRUSIONS
P.O. BOX 3069
TORRANCE, CA 90509

[B] ALUMINUM COMPANY OF AMERICA
P.O. BOX 96000
BELLEVUE, WA. 98009

Extrusions - BAC1506
Figure 10 (Sheet 2)

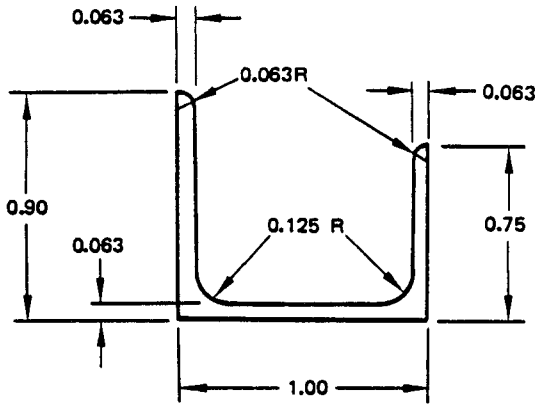

DASH NO.	DIE NO.	AREA
100146	82021 [A]	0.1638

NOTES

[A] ALUMINUM COMPANY OF AMERICA
P.O. BOX 96000
BELLEVUE, WA 98009

Extrusions - BAC1509
Figure 11

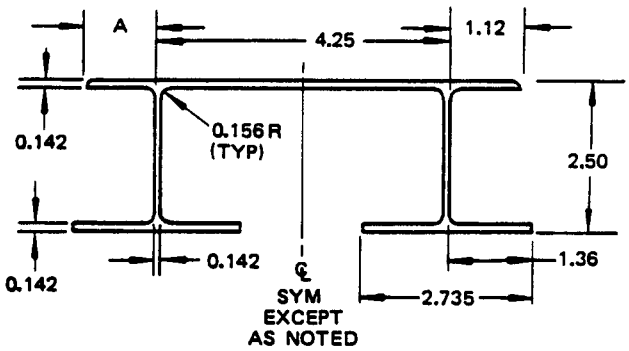

DASH NO.	DIE NO.	AREA	A
486	38879 [A]	2.367	1.12
491			1.50

NOTES

[A] REYNOLDS METALS, EXTRUSIONS
P.O. BOX 3069
TORRANCE, CA 90509

Extrusions - BAC1510
Figure 12

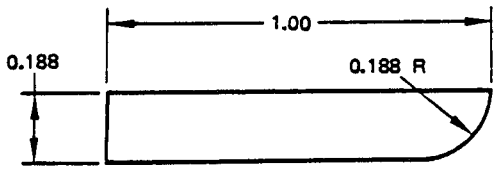

DASH NO.	DIE NO.	AREA
485	L-28896 [A] 24406 [B]	0.180

NOTES

[A] ALUMINUM COMPANY OF AMERICA
P.O. BOX 960000
BELLEVUE, WA. 98009

[B] INTERNATIONAL LIGHT METALS
(FORMERLY MARTIN MARIETTA ALUMINUM CO.)
19200 S. WESTERN AVENUE
TORRANCE, CA. 90509

Extrusions - BAC1512
Figure 13

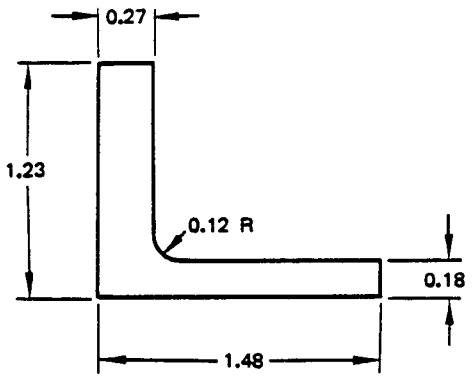

DASH NO.	DIE NO.	AREA
1161	10934 [A]	0.552

NOTES

[A] REYNOLDS METALS, EXTRUSIONS
P.O. BOX 3069
TORRANCE, CA. 90509

Extrusions - BAC1514
Figure 14

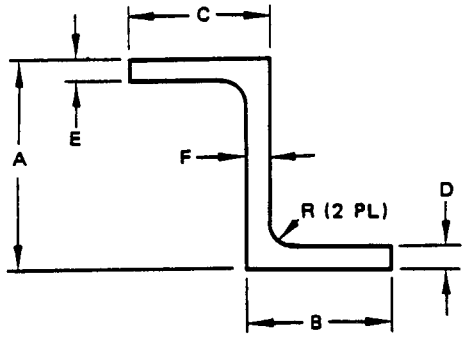

DASH NO.	DIE NO.	AREA	A	B	C	D	E	F	R
1469	41590 [A]		2.50	1.68	1.20	0.27	0.38	0.53	0.12
1479			2.12	1.52	1.30	0.33	0.45	0.42	0.25
1480	181495 [B]	2.30	2.12	1.91	1.67	0.39	0.45	0.61	0.25
1493	179905 [B]	2.528	2.12	1.67	1.30	0.45	0.45	0.70	0.25
1494	205512 [B]	3.554	2.09	2.31	1.72	1.00	0.45	0.70	0.25

NOTES

[A] REYNOLDS METALS, EXTRUSIONS
P.O. BOX 3069
TORRANCE, CA. 90509

[B] ALUMINUM COMPANY OF AMERICA
P.O. BOX 96000
BELLEVUE, WA 98009

Extrusions - BAC1517
Figure 15

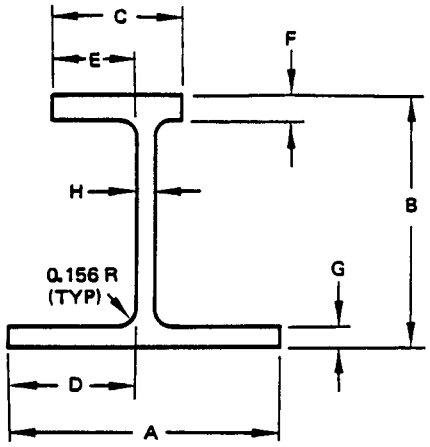

DASH NO.	DIE NO.	AREA	A	B	C	D	E	F	G	H
396	53335 [A]	1.115	2.85	2.50	2.65	1.36	1.12	0.142	0.142	0.142
401	179305 [B]	1.163	2.92	2.50	2.92	1.36	1.36	0.142	0.142	0.142
409	179745 [B]	3.761	5.41	2.63	3.00	2.55	1.20	0.32	0.39	0.35

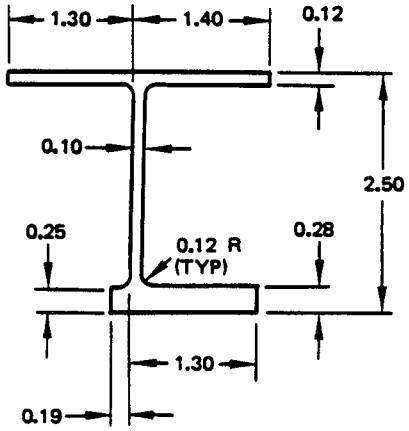

NOTES

[A] INTERNATIONAL LIGHT METALS
(FORMERLY MARTIN MARIETTA ALUMINUM CO.)
19200 S. WESTERN AVENUE
TORRANCE, CA. 90509

[B] ALUMINUM COMPANY OF AMERICA
P.O. BOX 96000
BELLEVUE, WA. 98009

[C] HOWMET CORP.
825 3RD AVENUE
NY, NY 10022

DASH NO.	DIE NO.	AREA
551	T-14054 [C] 374452 [A]	0.956

Extrusions - BAC1518
Figure 16

DASH NO.	DIE NO.	AREA
792	71957 [A]	1.0650

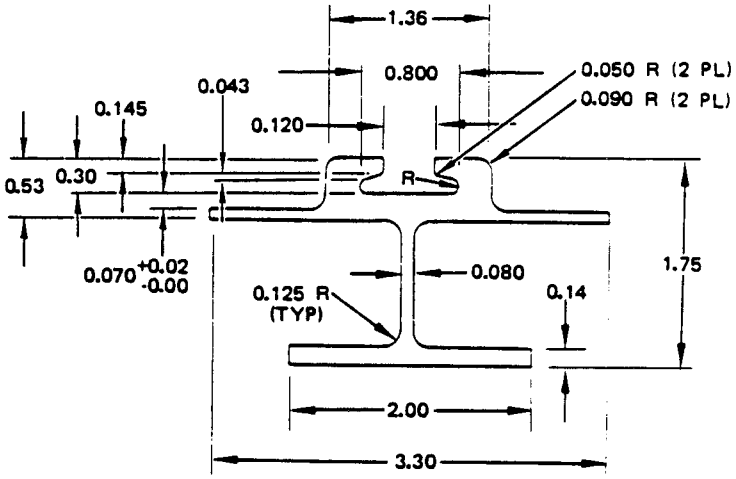

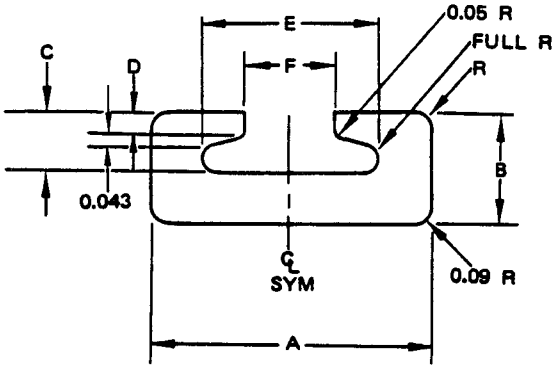

DASH NO.	DIE NO.	AREA	A	B	C	D	E	F	R
841	71954 [A]	0.5382	1.36	0.53	0.30	0.145	0.80	0.42	0.09
1429	T-14119 [B]		1.36	0.53	0.31	0.145	0.80	0.43	0.09

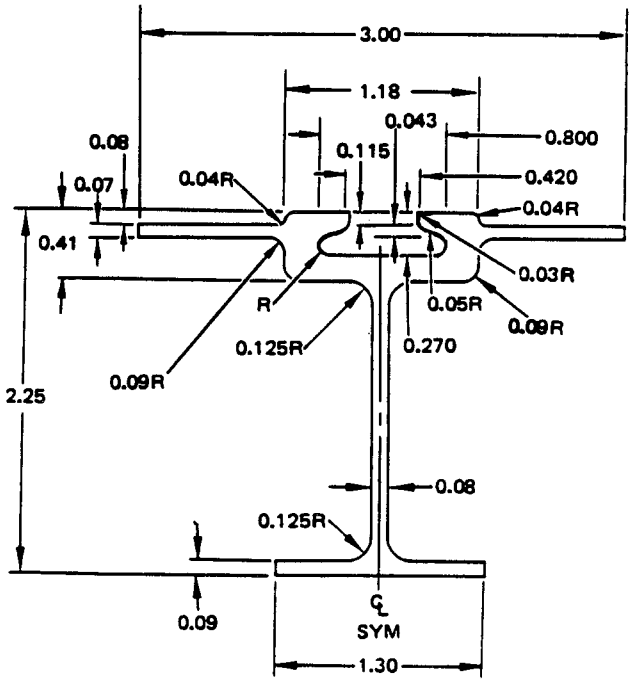

DASH NO.	DIE NO.	AREA
843	80472 [A]	0.7158

NOTES

[A] ALUMINUM COMPANY OF AMERICA
P.O. BOX 96000
BELLEVUE, WA 98009

[B] HOWMET CORP.
825 3RD AVENUE
NY, NY 10022

Extrusions - BAC1520
Figure 17 (Sheet 1)

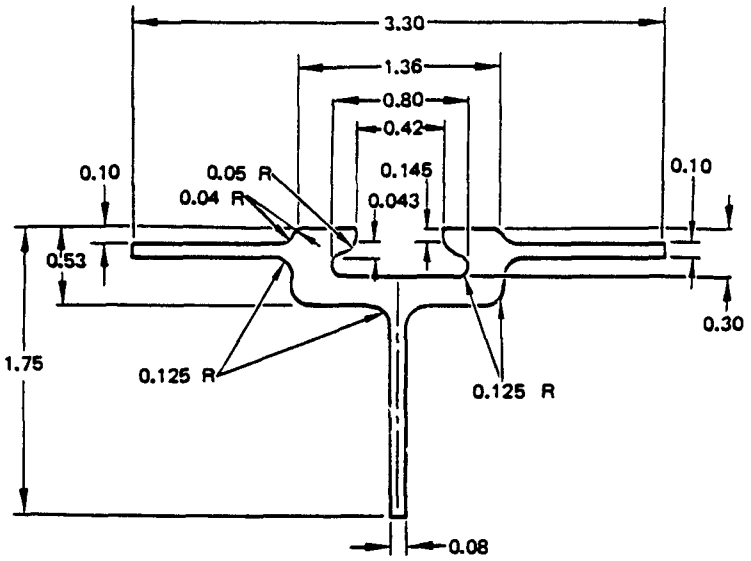

DASH NO.
1331

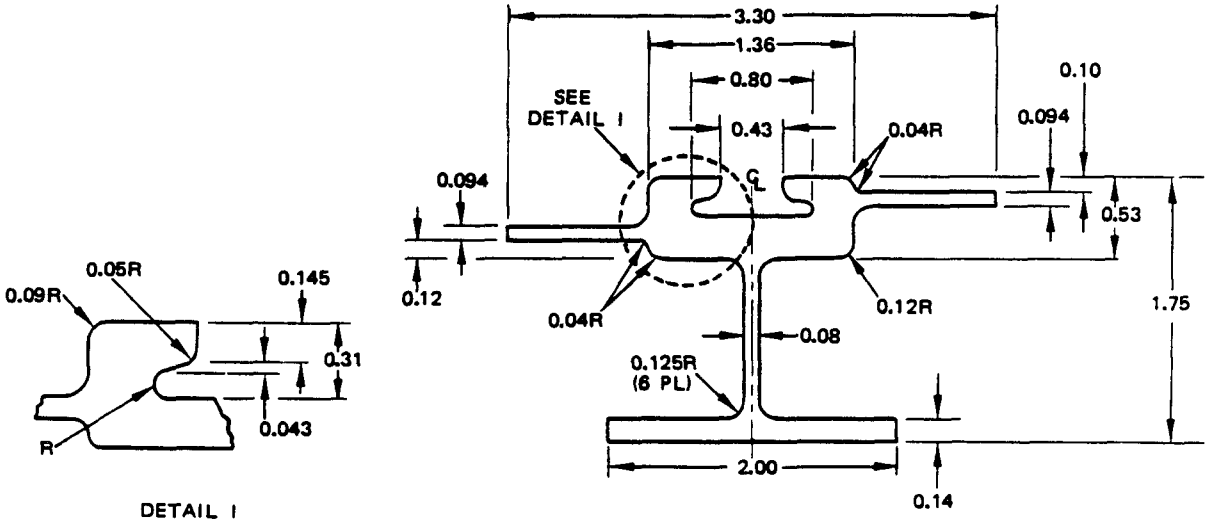

DASH NO.
1430

Extrusions - BAC1520
Figure 17 (Sheet 2)

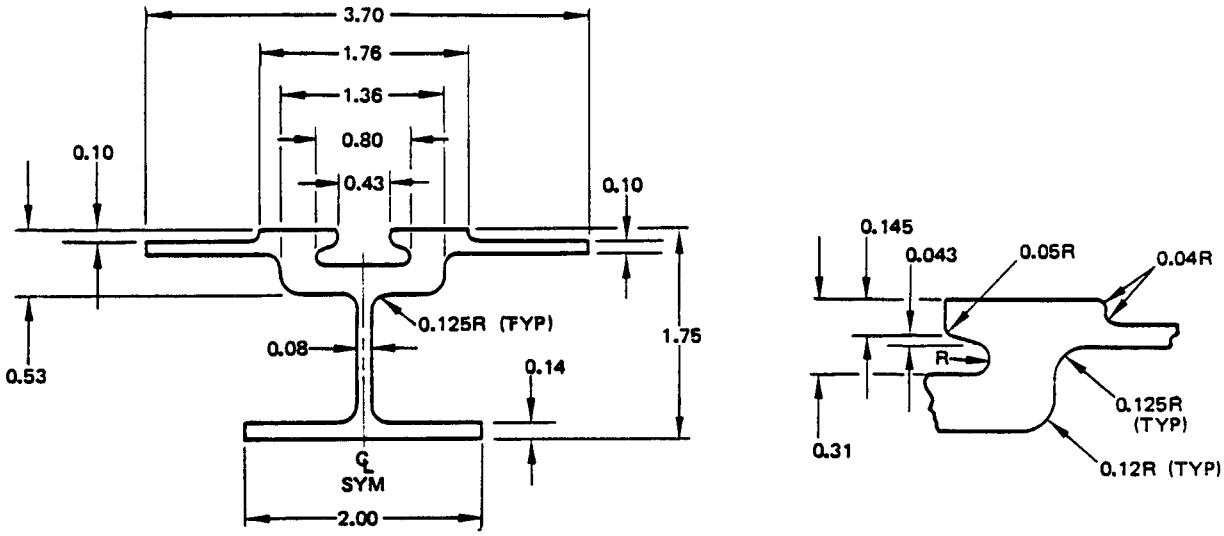

DASH NO.	DIE NO.	AREA
1432	T-12413 B	1.189

DASH NO.
1433

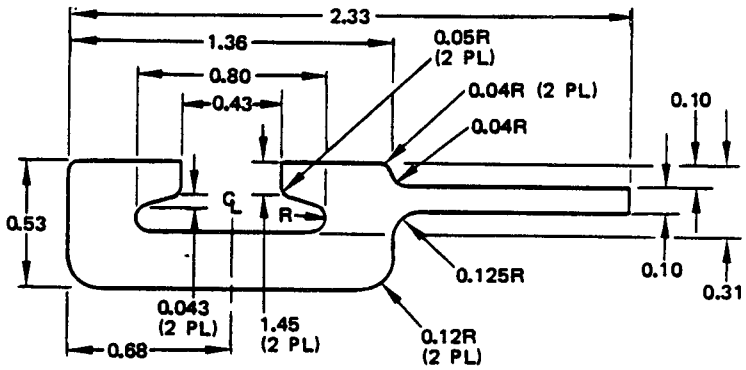

Extrusions - BAC1520
Figure 17 (Sheet 3)

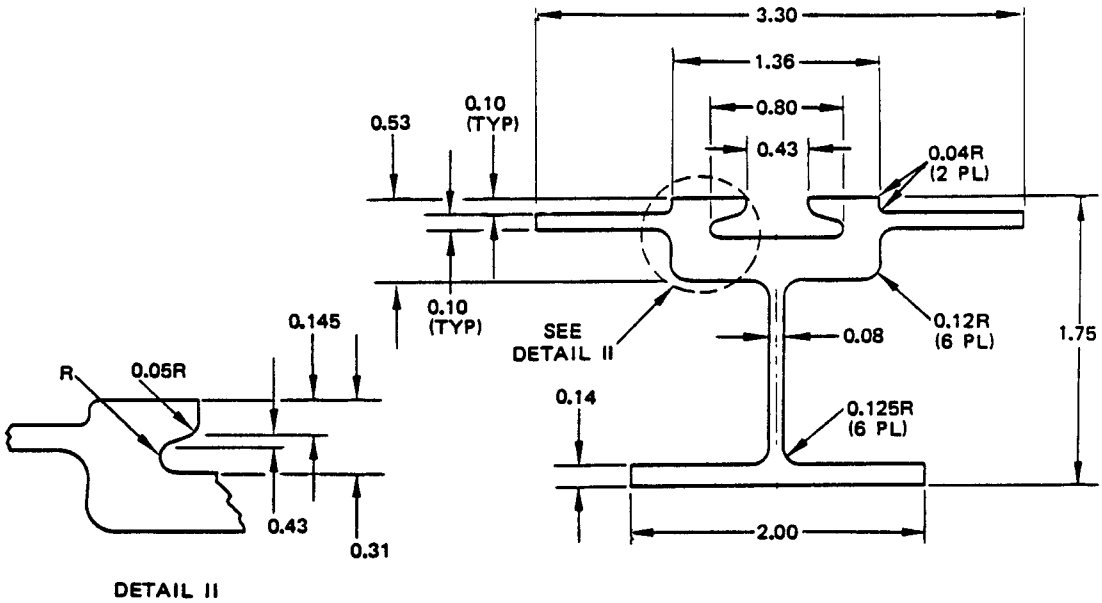

DASH NO.
1434

Extrusions - BAC1520
Figure 17 (Sheet 4)

NONMETALLIC MATERIALS

1. General

A. This subject lists nonmetallic materials used when making repairs contained within the 737-200 Structural Repair Manual and sources of supply. These materials are also called out with the applicable repair information. The purpose of this list is to show which subject the materials are used in and if they are common to more than one subject. The materials listed are not only used in the actual repair, but also are used for preparation and accomplishment of repairs.

B. Various materials, such as resins and prepreg materials used for composite repairs, have a limited shelf life and require special storage conditions. This information is available from the material suppliers.

C. Refer to the following figures for lists of materials:

Protective Coatings, Sealants, and Solvents . . . . . Figure 1

Glass Fabrics, Aramid Fabrics, Graphite Tapes,
Graphite Fabrics, and Nonmetallic Honeycomb Cores . . . . Figure 2

Adhesives, Adhesive Films, Potting Compounds,
and Resins. . . . . Figure 3

Abrasives . . . . . Figure 4

Miscellaneous Materials . . . . . Figure 5

D. For sealant classifications and substitution data, refer to 51-20-4.

MATERIAL	SOURCE	SUBJECT																			
		51-10-2	51-30-2	51-40-5	51-40-9	51-40-12	51-40-13	51-40-14	51-40-15	53-30-4	57-10-3										
PROTECTIVE COATINGS																					
ALODINE 1000 (MIL-C-5541)	A	X																			
ALODINE 1200 (MIL-C-5541)	A	X																			
ALODINE 1200S (MIL-C-5541)	A	X																			
ALODINE 600 (MIL-C-5541)	A	X																			
BMS 3-23, TYPE I		X																			
BOESHIELD T-9HF	D																				
BOESHIELD T-9	G																				
BMS 3-23, TYPE II		X																			
BOESHIELD T-9HF	D																				
BOESHIELD T-9	G																				
LPS-3	N																				
DINITROL AV 8	R S																				
LPS HARDCOAT	N																				
ZC 023	AI																				
BMS 3-26, TYPE I		X																			
DINITROL AV 25 B	R S																				
DINITROL AV 25 B-2	R S																				
LPS FORMULA B 997	N																				
ARDROX 3321	AQ																				
BMS 3-26, TYPE II		X																			
DINITROL AV 100 D	R S																				
LPS FORMULA B 1007	N																				
ARDROX 332	AQ																				
BMS 3-29		X																			
DINITROL AV 30	R S																				
PROCYON	N																				
ZC 029	AI																				

Protective Coatings, Sealants, and Solvents
Figure 1 (Sheet 1)

MATERIAL	SOURCE	SUBJECT																			
		51-10-2	51-30-2	51-40-5	51-40-9	51-40-12	51-40-13	51-40-14	51-40-15	53-30-4	57-10-3										
PROTECTIVE COATINGS (CONT)																					
BMS 10-11, TYPE I	E H O P Q Y	X	X		X	X	X	X	X	X											
BMS 10-20, TYPE II	H										X										
BMS 10-60, TYPE I, CLASS A	H Q Z					X	X	X	X												
CAB-O-SIL GRADE M-5 GRADE PTG				X																	
CALCIUM SULFATE	ANY SOURCE	X																			
CHROMIC ACID	ANY SOURCE	X																			
EC-843	F	X																			
IRIDITE 14-2	C	X																			
MIL-P-8585 ZINC CHROMATE PRIMER	ANY SOURCE	X																			
MIL-C-11796, CLASS 3 CORROSION-PREVENTATIVE COMPOUND	ANY SOURCE	X																			
MIL-C-16173, GRADE 1 CORROSION-INHIBITING COMPOUND	ANY SOURCE	X																			
MIL-C-16173, GRADE 3 WATER-DISPLACING CORROSION-INHIBITING COMPOUND	ANY SOURCE	X																			

Protective Coatings, Sealants, and Solvents
Figure 1 (Sheet 2)

MATERIAL	SOURCE	SUBJECT																			
		51-10-2	51-40-5	51-40-12	51-40-13	51-40-14	51-40-15	51-70	53-10-5	53-30-4	57-10-3	57-30-5									
PROTECTIVE COATINGS (CONT)																					
PHOSPHORIC ACID - GELLED PR50 (10%-12% BY WEIGHT)			X																		
SODIUM HYDROXIDE	ANY SOURCE	X																			
SULFURIC ACID	ANY SOURCE	X																			
TURCOAT ALUMIGOLD	AP	X																			
SEALANTS																					
BMS 5-19 CLASS A-1 PR 9021 A-1	J								X												
BMS 5-19 CLASS A-2 PRO-SEAL 719 A-2 PR 9021 A-2	J J								X												
BMS 5-19 CLASS A-4 PR 9021 A-4	J								X												
BMS 5-26 TYPE II, CLASS A-2 PRO-SEAL 890 A-2 PR 1440 A-2	J T U J T U		X	X	X	X	X			X	X										
BMS 5-26 TYPE II, CLASS B-2 PRO-SEAL 890 B-2 PR 1440 B-2	J T U J T U		X	X	X	X	X			X	X										
BMS 5-26 TYPE II, CLASS C-24 PRO-SEAL 890 C-24	J T U			X	X	X	X			X											
DOW CORNING 93-007-1/8	AO		X																		
BMS 5-63 CLASS B-4 DAPCOCAST 18-4	K											X									
BMS 5-79 CLASS B-1/2 PRO-SEAL 898 B-1/2	V							X													

Protective Coatings, Sealants, and Solvents
Figure 1 (Sheet 3)

MATERIAL	SOURCE	SUBJECT																			
		51-40-5	51-40-12	51-40-13	51-40-14	51-40-15	51-70	53-10-5	53-30-4	55-20-1	55-40-1	57-50-1									
SEALANTS (CONT)																					
BMS 5-79 CLASS B-2 PRO-SEAL 898 B-2 GC 414 B-2	V	X					X		X												
BMS 5-79 CLASS B-4 PRO-SEAL 898 B-4 GC 414 B-4	V	X					X		X												
BMS 5-79 CLASS B-8 PRO-SEAL 898 B-8	V						X														
BMS 5-79 CLASS C-24 PRO-SEAL 898 C-24	V						X														
BMS 5-79 CLASS C-48 PRO-SEAL 898 C-48	V						X														
BMS 5-79 CLASS D-2 PRO-SEAL 898 D-2	V						X	X													
BMS 5-95 TYPE I, CLASS B-1/2 PR1436G B-1/2 PRO-SEAL 870 B-1/2	J T U J T U		X	X	X	X		X	X	X	X	X									
BMS 5-95 TYPE I, CLASS B-2 PRO-SEAL 870 B-2	J T U	X	X	X	X	X		X	X	X	X	X									
BMS 5-95 TYPE I, CLASS B-4 PR1436G B-4	J T U	X	X	X	X	X		X	X	X	X	X									
BMS 5-95 TYPE I, CLASS C-20 PR1436G TYPE I	J T U		X	X	X	X			X												
BMS 5-95 TYPE I, CLASS F-1 PR1432GP	J T U								X												

Protective Coatings, Sealants, and Solvents
Figure 1 (Sheet 4)

MATERIAL	SOURCE	SUBJECT																			
		51-10-2	51-30-2	51-30-8	51-40-5	51-40-6	51-40-7	51-40-8	51-40-9	51-40-12	51-40-13	51-40-14	51-40-15	53-20-2	53-30-4	57-10-3	57-30-5				
SOLVENTS																					
BMS 3-2, TYPE 2			X																		
SKELLYSOLVE-V	AC																				
STANDARD 265	AD																				
SIKKENS 96.131	AF																				
BMS 11-7					X	X									X	X					
PFL-307-56	M																				
T-2279A	AG																				
TURCO 4460	AH																				
PRE-SEALING CLEANING SOLVENT T-825	AJ																				
TL-4119	AK																				
SIKKENS 96.130	AF																				
M-189 SOLVENT	AL																				
ACETONE	ANY SOURCE				X		X		X	X	X	X	X	X							
METHYL ETHYL KETONE (MEK)	ANY SOURCE	X	X	X	X	X	X	X	X	X	X	X	X	X	X	X	X				
METHYL ISOBUTYL KETONE (MIBK)	ANY SOURCE				X	X			X	X	X	X	X								
PERCHLOROETHYLENE	ANY SOURCE	X																			
TRICHLOROETHYLENE	ANY SOURCE	X				X															
NAPHTHA	ANY SOURCE	X																			
P-D-680 SOLVENT	ANY SOURCE	X																			
STODDART SOLVENT	ANY SOURCE	X																			
MAGNAFLUX CORP. SOLVENT	AN	X																			
DOWCLENE EC	AM																				
TURCO PRE-PAINT	B	X																			

Protective Coatings, Sealants, and Solvents
Figure 1 (Sheet 5)

MATERIAL	SOURCE	SUBJECT																			
		51-10-2																			
SOLVENTS (CONT)																					
PHOSPHORIC ACID	ANY SOURCE	X																			
BUTYL CELLULOSE	ANY SOURCE	X																			
TRITON X-100 WETTING AGENT	X	X																			
KELITE POLYCOTE	C	X																			

Protective Coatings, Sealants, and Solvents
Figure 1 (Sheet 6)

NOTES

[A] AMCHEM PRODUCTS, INC.
SPRING GARDEN ST
AMBLER, PENNSYLVANIA 19002

[B] PUREX CORPORATION
TURCO PRODUCTS DIV.
24600 S. MAIN ST
P.O. BOX 6200
CARSON, CALIFORNIA 90749

[C] WITCO CHEMICAL CORP.
WITCO-ALLIED KETLITE DIV.
1250 N. MAIN ST
LOS ANGELES, CALIFORNIA 90012

[D] PARKER AND AMCHEM
32100 STEPHENSON HWY
MADISON HEIGHTS, MICHIGAN 48071

[E] DE SOTO CHEMICAL COATINGS, INC.
FOURTH AND CEDAR ST
BERKELEY, CALIFORNIA 94710

[F] 3M
3M CENTER
ST. PAUL, MINNESOTA 55101

[G] GIBSON CHEMICALS, LTD.
350 RESERVE RD
CHELTENHAM, VICTORIA-AUSTRALIA

[H] BOSTIC WEST
20846 S. NORMANDY
TORRANCE, CALIFORNIA 90502

[I] ESSEX CHEMICAL CORP.
(SEE PRODUCTS RESEARCH
AND CHEMICAL CORP., NOTE [J])

[J] COURTALDS STRUCTURAL
COMPOSITES, INC.
6 SHIELDS DR, P.O. BOX 618
BENNINGTON, VERMONT 05201-0618

[K] D. AIRCRAFT PRODUCTS CO.
1191 HAWK CIRCLE
ANAHEIM, CALIFORNIA 92708

[L] UNION OIL COMPANY OF CALIFORNIA
P.O. BOX 76
SEATTLE, WASHINGTON 98111

[M] UNION OIL COMPANY OF CALIFORNIA
UNION 76 DIV., WESTERN REGION
461 S. BOYLSTON ST
P.O. BOX 7600
LOS ANGELES, CALIFORNIA 90017-1443

[N] LPS LABORATORIES, INC.
4647 HUGH HOWELL RD
P.O. BOX 3050
TUCKER, GEORGIA 30084

[O] TEMPO PAINT AND VARNISH CO.
205 FENMAR DR
WESTON, ONTARIO
CANADA M9L2X4

[P] DEFT CHEMICAL COATINGS
17451 VON KARMAN AVE
IRVINE, CALIFORNIA 92714

[Q] CROWN METRO, INC.
ECHELON RD
DONALDSON CENTER
GREENVILLE, SOUTH CAROLINA 29606

[R] DINOL (U.S.), INC.
14826 N.E. 95TH ST
REDMOND, WA 98052

[S] DINOL AB
BOX 149, S-281 22
HASSLEHOLM, SWEDEN

[T] LE JOINT FRANCAIS
84-116 RUE S ALLENDE
95870
BEZONS, FRANCE

[U] YOKOHAMA RUBBER COMPANY LTD.
36-11 SHIMBASHI 5-CHOME MINATO KU
TOKYO 105, JAPAN

[V] BMS 5-79 IS SUPERSEDED BY
BMS 5-95. SEE 51-20-4, FIG. 2
FOR SUBSTITUTE SEALANTS

[W] CHEM SEAL CORPORATION OF AMERICA
11120 SHERMAN WAY
SUN VALLEY, CALIFORNIA 91352

[X] TRITON INDUSTRIES, INC.
TRITON MANUFACTURING CO.
P.O. BOX 361
EAST HADDAM, CONNECTICUT 06423

[Y] PAINT INDUSTRIES (AUST.) PTY LTD.
BENNET AND STREET
MORLAKE N.S.W.
2137 AUSTRALIA

[Z] BOSTIK G. M. B. E.
D-637
OBERURSEL, GERMANY

[AA] EXXON COMPANY, USA
P.O. BOX 2180
HOUSTON, TEXAS 77001

[AB] SHELL PETROCHEMICAL
SUITE 6, TWO PLAZA S.W.
6700 S.W. HAINES RD
TIGARD, OREGON 97223

Protective Coatings, Sealants, and Solvents
Figure 1 (Sheet 7)

NOTES (CONT)

AC GETTY REFINING AND MARKETING CO.
605 WEST 47TH ST
KANSAS CITY, MISSOURI 64141

AD STANDARD OIL COMPANY OF CALIFORNIA
P.O. BOX 220
SEATTLE, WASHINGTON 98111

AE ATLANTIC RICHFIELD CO.
1801 E. SEPULVEDA BLVD
CARSON, CALIFORNIA 90744

AF SIKKENS LAKFABRIEKEN BV
RIJKSSTRAATWEG 31 POSTBUSNR 3
2171 AJ SASSENHEIM, NETHERLANDS

AG PRATT AND LAMBERT, INC.
945 BURLINGTON
P.O. BOX 206
KANSAS CITY, MISSOURI 64141

AH TURCO PRODUCTS, INC.
SUBSIDIARY OF ELF AUTOCHEM NORTH AMERICA
7300 BOLSA AVE
WESTMINSTER, CALIFORNIA
92684-3600

AI ZIP-CHEM PRODUCTS
1860 DOBBIN DR
SAN JOSE, CALIFORNIA 95133

AJ KOPPERS COMPANY, INC.
3000 KOPPERS BLDG
PITTSBURG, PENNSYLVANIA
15219-1818

AK OBRIEN CORP.
WESTERN REGION SALES
450 EAST GRAND AVE
SOUTH SAN FRANCISCO, CALIFORNIA
94080-6207

AL JOHN B. MOORE CORP.
OUTER MAIN ST
P.O. BOX 65
SOUTH AMBOY, NEW JERSEY 08879

AM DOW CHEMICAL USA
BARSTOW BUILDING
2020 DOW CENTER
MIDLAND, MICHIGAN 48640

AN MAGNAFLUX CORP.
7300 W. LAWRENCE AVE
CHICAGO, ILLINOIS 60656

AO DOW CORNING CORP.
3901 S. SAGINAW RD
MIDLAND, MICHIGAN 48641-2721

AP TURCO PRODUCTS, INC.
24700 S. MAIN ST
P.O. BOX 6200
CARSON, CALIFORNIA 90749

AQ ARDROX, INC.
16961 KNOTT AVE.
LA MIRADA, CA 90638

Protective Coatings, Sealants, and Solvents
Figure 1 (Sheet 8)

MATERIAL	SOURCE	SUBJECT		
		51-40-9	51-40-13	51-40-14
GLASS FABRIC				
BMS 8-79				
TYPE 120, CLASS III, GRADE I		X	X	
120-F155-5-F69	A F P			
120-F255-1-F69	F			
NARMCO-3203-120,Z6040	H			
NARMCO-3203F-120,Z6040	S			
NARMCO-3203-120	H			
MXB 7701-120-Z6040	G			
120-F155-5-CS272	Q			
G120/F6986S03-S920NM	N			
BMS 8-79				
TYPE 1581, CLASS III, GRADE I			X	
1581-F155-5-F69	A F P			
1581-F255-1-F69	F			
NARMCO-3203-1581,Z6040	H S			
NARMCO-3203F-1581,Z6040	S			
NARMCO-3203-1581	H			
MXB 7701-1581-Z6040	G			
1581-F155-5-CS272	Q			
G1581/F6986S03-S920NM	N			
BMS 8-79				
TYPE 7781, CLASS III, GRADE I			X	
7781-F155-5-F69	A F P			
7781-F255-1-F69	F			
NARMCO-3203-7781,Z6040	H			
NARMCO-3203F-7781,Z6040	S			
NARMCO-3203-7781	H			
MXB 7701-7781-Z6040	G			
7781-F155-5-CS272	Q			
G7781/F6986S03-S920NM	N			
BMS 8-139				
TYPE 120, CLASS I				X
120-F161-108-F50	A F			
NARMCO-588-120	H			

Glass Fabrics, Aramid Fabrics, Graphite Tapes, Graphite Fabrics, and Nonmetallic Honeycomb Cores
Figure 2 (Sheet 1)

165205

MATERIAL	SOURCE	SUBJECT																			
		51-40-6	51-40-7	51-40-8	51-40-9	51-40-12	51-40-13	51-40-14	51-40-15	53-20-2											
GLASS FABRIC (CONT)																					
BMS 8-139 TYPE 181, CLASS I 181-F161-108-F50 NARMCO-588-181	 A F H							X													
BMS 9-3 TYPE D (ALL CLASSES EXCEPT CLASSES 1 AND 15)	J K L O AB AC AD AE				X	X	X		X												
BMS 9-3 TYPE H-2 (ALL CLASSES EXCEPT CLASSES 1 AND 15)	J K L O AB AC AD AE	X		X	X	X			X	X											
BMS 9-3 TYPE H-3 (ALL CLASSES EXCEPT CLASSES 1 AND 15)	J K L O AB AC AD AE	X		X	X	X			X	X											
BMS 9-3 TYPE J (ALL CLASSES EXCEPT CLASSES 1 AND 15)	J K L O AB		X																		
BMS 9-3 TYPE J-2 (ALL CLASSES EXCEPT CLASSES 1 AND 15)	J K L O AB		X																		
BMS 8-199 FIBERGLASS MAT, BINDER TYPE NO. 216	AG		X																		

Glass Fabrics, Aramid Fabrics, Graphite Tapes, Graphite Fabrics, and Nonmetallic Honeycomb Cores
Figure 2 (Sheet 2)

MATERIAL	SOURCE	SUBJECT	
		51-40-13	51-40-14
ARAMID FABRIC			
BMS 8-218 STYLE 285			X
KEVLAR 49-285 F161-188	F		
MXM 7880/KEVLAR 49-285	G		
CYCOM 985 K285	I		
R-9369-285K	E		
BMS 8-219 STYLE 120		X	
KEVLAR 49-120 F155-71	J		
MXM 7714/KEVLAR 49-120	G		
K120/F6986S03-KE-420	N		
CYCOM 919 K120	I		
R-9269-120K	E		
BMS 8-219 STYLE 285		X	
KEVLAR 49-285 F155-71	J		
MXM 7714/KEVLAR 49-285	G		
K285/F6986S03-KE-420	N		
CYCOM 919 K285	I		
R-9269-285K	E		

Glass Fabrics, Aramid Fabrics, Graphite Tapes, Graphite Fabrics, and Nonmetallic Honeycomb Cores
Figure 2 (Sheet 3)

165210

MATERIAL	SOURCE	SUBJECT	
		51-40-13	51-40-14
GRAPHITE TAPE			
BMS 8-168 CLASS 1,TYPE II,GRADE 95		X	
T3T-95-12-F155-76	F		
T6C-95-12-F155-76	F		
T2C-95-12-F155-76	F		
HYE-10714AC(95)	M		
CYCOM 919GT-3095	I		
R-6268-C3K-95-40	E		
BMS 8-168 CLASS 1,TYPE II,GRADE 145		X	
T3T-145-12-F155-76	F		
T6C-145-12-F155-76	F		
T2C-145-12-F155-76	F		
HYE-10714AC(145)	M		
HY-E 16714AD(145)II	M		
CYCOM 919GT-3145	I		
R-6268-C12K-145-40	E		
BMS 8-168 CLASS 1,TYPE II,GRADE 190		X	
T3T-190-12-F155-76	F		
T6C-190-12-F155-76	F		
T2C-190-12-F155-76	F		
HYE-10714AC(190)	M		
HY-E 16714AD(190)II	M		
C3U190/F6986S03	R		
CYCOM 919GT-3190	I		
R-6268-C12K-190-40	E		
BMS 8-212 CLASS 1,TYPE II,GRADE 95			X
RIGIDITE 5208T-300-95-35 PERCENT	H		
RIGIDITE 5208-C3000-95-35 PERCENT	H		
RIGIDITE 5208FT-300-95-35 PERCENT	S		
HYE-1034C(95)-II	M		
T3T95-12-F263-2	F		
T6C95-12-F263-2	F		
T2C95-12-F263-2	F		
AS4/3501-5A	T		

Glass Fabrics, Aramid Fabrics, Graphite Tapes, Graphite Fabrics, and Nonmetallic Honeycomb Cores
Figure 2 (Sheet 4)

165211

MATERIAL	SOURCE	SUBJECT																				
		51-40-14																				
GRAPHITE TAPE (CONT)																						
BMS 8-212																						
CLASS 1,TYPE II,GRADE 190		X																				
RIGIDITE 5208T-300-190-35 PERCENT	H																					
RIGIDITE 5208-C3000-190-35 PERCENT	H																					
RIGIDITE 5208FT-300-190-35 PERCENT	S																					
HYE-1034C(190)-II	M																					
T3T190-12-F263-2	F																					
T5T190-12-F263-2	F																					
T6C190-12-F263-2	F																					
T2C190-12-F263-2	F																					
AS4/3501-SA	T																					

Glass Fabrics, Aramid Fabrics, Graphite Tapes, Graphite Fabrics, and Nonmetallic Honeycomb Cores
Figure 2 (Sheet 5)

165212

MATERIAL	SOURCE	SUBJECT	
		51-40-13	51-40-14
GRAPHITE FABRIC			
BMS 8-168 CLASS 2,TYPE II, STYLE 3K-70-PW		X	
W3T-282-42-F155-76	F		
W3C-282-42-P155-76	F		
HMF-322/7714AC	M		
C3WPW/F6986S03	N		
C3BWPW/F6986S03	N		
CYCOM 919GF-3070PW	I		
R-6268-C3K-70-PW-42	E		
BMS 8-168 CLASS 2,TYPE II, STYLE 3K-135-8H		X	
F3T-584-42-F155-76	F		
CYCOM 919GF-3135H8	I		
R-6268-C3K-135-8H-42	E		
BMS 8-212 CLASS 2,TYPE III, STYLE 3K-135-8H			X
RIGIDITE 5208 WOVEN T-300 STYLE 3K-135-8H- 37 PERCENT	H		
RIGIDITE 5208 WOVEN C3000 STYLE 3K-135-8H- 37 PERCENT	H		
RIGIDITE 5208F WOVEN T-300 STYLE 3K-135-8H- 37 PERCENT	S		
HMF-133/34-III	M		
F3T-584-42-F263-7	F Q		
F3C-584-42-F263-7	F		
A370-8H/3501-5AD	T		
CYCOM 985GF3135H8	I		
FIBREDUX 922C-815-37%	C		
R922-C3K1358H-37	E		

Glass Fabrics, Aramid Fabrics, Graphite Tapes, Graphite Fabrics, and Nonmetallic Honeycomb Cores
Figure 2 (Sheet 6)

165213

MATERIAL	SOURCE	SUBJECT 51-40-14
GRAPHITE FABRIC (CONT)		
BMS 8-212 CLASS 2,TYPE IV, STYLE 3K-70-PW		X
RIGIDITE 5208 WOVEN T-300 STYLE 3K-70-PW- 40 PERCENT	H	
RIGIDITE 5208 WOVEN C3000 STYLE 3K-70-PW- 40 PERCENT	H	
RIGIDITE 5208F WOVEN T-300 STYLE 3K-70-PW- 40 PERCENT	S	
HMF-322/34C-IV	M	
HMF-1322/34C-IV	M	
W3C-282-42-F263-8	F	
W3T-282-42-F263-8	Q	
A193-P/3501-5AD	T	
CYCOM 985GF3070PW	I	
FIBREDUX 922C-B14NT-40%	C	
R922-C3K70PW-40	E	
BMS 8-256 CLASS 2,TYPE I, STYLE 3K-70-PW		X
W3T-282-42-F593-1	F	
HMF-322/81C	M	

Glass Fabrics, Aramid Fabrics, Graphite Tapes, Graphite Fabrics, and Nonmetallic Honeycomb Cores
Figure 2 (Sheet 7)

165215

MATERIAL	SOURCE	SUBJECT	
		51-40-12	51-40-15
GRAPHITE FABRIC (CONT)			
BMS 9-8 TYPE I,CLASS 2, STYLE 3K-70-P		X	X
W-134	M		
W-322	M		
W-422	M		
W-1134	M		
W-1322	M		
ES-1434	U		
ES-1475	U		
F3T-282	J		
F3C-282	J		
4163	V		
4133	V		
7373	W		
G814NT	X		
43193/1/107 cm	Y		
9610	Z		
9820	Z		
A0039/000	AA		
CGG-100	E		
BMS 9-8 TYPE I,CLASS 2, STYLE 3K-135-8H		X	X
W-133	M		
W-401	M		
W-1133	M		
ES-1433	U		
ES-1480	U		
F3T-584	J		
F3C-584	J		
4243	V		
4245	V		
G815	X		
43364/1/107 cm	Y		
9650	Z		
9860	Z		
A0053/000	AA		
CGG-104	E		

Glass Fabrics, Aramid Fabrics, Graphite Tapes, Graphite Fabrics, and Nonmetallic Honeycomb Cores
Figure 2 (Sheet 8)

165216

MATERIAL	SOURCE	SUBJECT					
		51-40-6	51-40-9	51-40-12	51-40-13	51-40-14	51-40-15
NONMETALLIC HONEYCOMB							
BMS 8-124 CLASS I,TYPE I,GRADE 4.0		X	X	X	X		X
HRP 3/16-4.0	A D						
HTP-3/16-4.0	B						
BMS 8-124 CLASS I,TYPE I,GRADE 5.5		X					
HRP 3/16-5.5	A						
HTP-3/16-5.5	E						
BMS 8-124 CLASS I,TYPE I,GRADE 8.0		X		X		X	X
HRP 3/16-8.0	D						
HTP-3/16-8.0	B						
BMS 8-124 CLASS I,TYPE I,GRADE 9.0		X					
HRP 3/16-9.0	A						
HTP-3/16-9.0	A						
BMS 8-124 CLASS I,TYPE I,GRADE 12.0				X	X		X
HRP 3/16-12.0	D						
HTP-3/16-12.0	B						
BMS 8-124 CLASS IV,TYPE V,GRADE 3.0				X	X	X	X
HRH-10-1/8-3.0	A D						
HMX-1/8-3.0	B						
HFT-1/8-3.0	A						
A-1-48-3	C						
HRH10-1/8-3.0	Q						
SAH-1/8-3.0	AF						
BMS 8-124 CLASS IV,TYPE V,GRADE 4.0				X		X	X
HRH-10-1/8-4.0	A						
HFT-1/8-4.0	A						
A-1-64-3	C						
HMX-1/8-4.0	B						
BMS 8-124 CLASS IV,TYPE V,GRADE 5.0				X		X	X
HRH-10-1/8-5	A						
HMX-1/8-5	B						
SAH-1/8-5.0	AF						

Glass Fabrics, Aramid Fabrics, Graphite Tapes, Graphite Fabrics, and Nonmetallic Honeycomb Cores
Figure 2 (Sheet 9)

165221

MATERIAL	SOURCE	SUBJECT					
		51-40-6	51-40-9	51-40-12	51-40-13	51-40-14	51-40-15
NONMETALLIC HONEYCOMB (CONT)							
BMS 8-124 CLASS IV,TYPE V,GRADE 8.0				X	X		X
HRH-10-1/8-8	A						
HMX-1/8-8	B						
HFT-1/8-8.0	A						
SAH-1/8-8.0	AF						
BMS 8-124 CLASS IV,TYPE V,GRADE 9.0				X		X	X
HRH-10-1/8-9	A						
HMX-1/8-9	B						
SAH-1/8-9.0	AF						
BMS 8-124 CLASS IV,TYPE VI,GRADE 3.0				X	X		X
HRH-10-3/160X-3.0	A						
HMX-3/16-0X-3.0	B						
HRH10-3/16-0X-3.0	Q						
HRH-10/F50-5.0	A D		X				

Glass Fabrics, Aramid Fabrics, Graphite Tapes, Graphite Fabrics, and Nonmetallic Honeycomb Cores
Figure 2 (Sheet 10)

165222

NOTES

[A] HEXCEL CORPORATION
VALLEY INDUSTRIAL PARK
P.O. BOX 66
CASA GRANDE, ARIZONA 85222

[B] CIBA-GEIGY CORPORATION
COMPOSITE MATERIALS DEPARTMENT
3550 NW 49TH STREET
MIAMI, FLORIDA 33142

[C] CIBA-GEIGY (UK), LTD.
BONDED STRUCTURES DIVISION
DUXFORD, CAMBRIDGE CB24QD, ENGLAND

[D] HEXCEL CORPORATION
338 N. PENNSYLVANIA
GRAHAM, TEXAS 76046

[E] CIBA-GEIGY
COMPOSITE MATERIALS DEPARTMENT
10910 TALBERT AVE.
FOUNTAIN VALLEY, CALIFORNIA 92708

[F] HEXCEL CORPORATION
STRUCTURAL PRODUCTS DIVISION
10 TREVARNO ROAD
LIVERMORE, CALIFORNIA 94550

[G] FIBERITE WEST COAST CORP.
645 N. CYPRESS STREET
P.O. BOX 738
ORANGE, CALIFORNIA 92669

[H] CELANESE CORPORATION
NARMCO MATERIALS DIVISION
1440 NORTH KRAEMER BLVD
ANAHEIM, CALIFORNIA 92806

[I] AMERICAN CYANAMID COMPANY
INDUSTRIAL CHEMICALS AND
PLASTICS DIV.
BLOOMINGDALE PLANT
OLD POST ROAD
HAVRE DE GRACE, MARYLAND 21078

[J] HEXCEL CORPORATION
11711 DUBLIN BLVD
DUBLIN, CALIFORNIA 94566

[K] CLARK-SCHWEBEL FIBER GLASS CORP.
5 CORPORATE PARK DRIVE
WHITE PLAINS, NEW YORK 10604

[L] J.P. STEVENS AND COMPANY, INC.
STEVENS TOWER
1185 AVENUE OF THE AMERICAS
NEW YORK, NEW YORK 10036

[M] FIBERITE CORPORATION
501-559 W. THIRD STREET
WINONA, MINNESOTA 55987

[N] YOKOHAMA RUBBER CO., LTD.
AEROSPACE DIVISION
P.O. BOX 20, HIRATSUKA-SHI
KANAGAWA-KEN, 254 JAPAN

[O] BURLINGTON INDUSTRIES
BURLINGTON GLASS FABRICS CO.
1345 AVENUE OF THE AMERICAS
NEW YORK, NEW YORK 10019

[P] HEXCEL CORPORATION
815 LAWRENCE STREET
P.O. BOX 668
LANCASTER, OHIO 43130

[Q] HEXCEL CORPORATION S.A.
RUE DES 3, BOURDONS 50
PARC INDUSTRIEL
4840 WELKENRAEDT, BELGIUM

[R] YOKOHAMA RUBBER CO., LTD.
C/O TORAY INDUSTRIES, INC.
SHIGA PLANT
3-1, 3-CHOME, SONOYAMA
OTSU-SHI, SHIGA-KEN
520 JAPAN

Glass Fabrics, Aramid Fabrics, Graphite Tapes, Graphite Fabrics, and Nonmetallic Honeycomb Cores
Figure 2 (Sheet 11)

NOTES (CONT)

[S] CELANESE CORPORATION
CEM NARMCO ET CIE
29, CHEMIN DE LA LIGNE DE L'EST
69, VILLEURBANNE, FRANCE

[T] HERCULES INC.
BACCHUS WORKS
GRAPHITE FIBERS BUSINESS CENTER
P.O. BOX 98
MAGNA, UTAH 84044

[U] HITCO
WOVEN STRUCTURES DIVISION
618 WEST CAROB STREET
COMPTON, CALIFORNIA 90220

[V] TEXTILE PRODUCTS, INC.
2512 W. WOODLAND DRIVE
ANAHEIM, CALIFORNIA 92801

[W] SAKAI COMPOSITES CORP.
1349-1 HOSOJIMA, SHIMADA-CITY,
SHIZUOKA-PREF., 427 JAPAN

[X] J. BROCHIER ET FILS
70 COURS TOLSTOI
BOITE POSTALE 3007
69605 VILLEURBANNE, SEDEX FRANCE

[Y] STEVENS - GENIN, S.A.
38360 LES AVENIERES
FRANCE

[Z] TERANA, INC.
2512 W. WOODLAND DRIVE
ANAHEIM, CALIFORNIA 92801

[AA] FOTHERGILL AND HARVEY LTD.
INDUSTRIAL TEXTILES DIVISION
SUMMIT LITTLEBOROUGH
LANCASHIRE, ENGLAND
GL 15 9QP

[AB] UNIGLASS INDUSTRIES
UNITED MERCHANTS
P.O. BOX 871
STATESVILLE, NORTH CAROLINA 28677

[AC] CLARK-SCHWEBEL INTERNATIONAL S.A.
BATTICE, BELGIUM

[AD] KANEBO FIBER GLASS COMPANY LTD.
3-12 MOTO-AKASAKA 1-CHOME
MINATO-KU, TOKYO 107, JAPAN

[AE] ARISAWA MFG CO., LTD.
5-5, 1-CHOME MINAMI HONCHO
JOETSU-CITY, NIIGATA-PREFECTURE
JAPAN

[AF] SHOWA AIRCRAFT INDUSTRY CO. LTD.
NO. 600 TANAKA-MACHI
ARISHIMA-SHI, TOKYO, JAPAN

[AG] OWENS CORNING FIBERGLAS CORP.
608 MADISON AVENUE
TOLEDO, OHIO 43604

Glass Fabrics, Aramid Fabrics, Graphite Tapes, Graphite Fabrics, and Nonmetallic Honeycomb Cores
Figure 2 (Sheet 12)

MATERIAL	SOURCE	SUBJECT																			
		51-30-8	51-40-1	51-40-5	51-40-6	51-40-8	51-40-9	51-40-12	51-40-13	51-40-14	51-40-15	53-20-2									
ADHESIVES																					
M6249	J	X																			
BMS 5-25 TYPE II,GRADE 1 EPIBOND 1539 A/B	B							X	X	X	X										
BMS 5-51 TYPE III EC-3903	A K				X																
BMS 5-92 TYPE I EC2216A/B	AI			X	X			X	X	X	X										
BMS 5-126, TYPE I 88 COMPONENT A EPON 828 LX-112 COMPONENT B VERSAMID 115 VERSAMID 125	 Z AA N N				X	X	X														
BMS 5-126 TYPE II,III,V,VI CLASS I,II, GRADE I COMPONENT A EPON 828 DER 331 HELOXY 68 COMPONENT B VERSAMID 115 VERSAMID 125	 Z AB AC AC AD N N				X	X	X														
BMS 5-126 TYPE II, CLASS I, GRADE 2 EPIBOND 1534 A/B	B				X	X	X														
ADHESIVE FILMS																					
BMS 5-51 TYPE 2,CLASS I,GRADE 15 AF-126	A						X		X												
BMS 5-51 TYPE 2,CLASS II,GRADE 15 AF-126-2	A						X		X												

Adhesives, Adhesive Films, Potting Compounds, and Resins
Figure 3 (Sheet 1)

MATERIAL	SOURCE	SUBJECT																			
		51-40-5	51-40-6	51-40-13	51-40-14																
ADHESIVE FILMS (CONT)																					
BMS 5-90 TYPE III, CLASS 350-10-10, GRADE 50 [AJ] FOAMING ADH. FILM FM 490A MA 562 PL 685	 [AH] [AG] [AG]		X		X																
BMS 5-90 TYPE IV, CLASS 350-10-10 FOAMING, EXTRUDABLE ADH. PL 460	 [AH]		X		X																
BMS 5-101 TYPE II, GRADE 10 AND 15 AF 163 FM 73 EA9628 METLBOND 1133	 [K] [AI] [C] [G] [AK]	X	X	X																	
BMS 5-129 TYPE 2, CLASS IA, GRADE 15 AF-126	 [A]			X																	
BMS 5-129 TYPE 2, CLASS IIA, GRADE 15 AF-126-2	 [A]			X																	
BMS 5-129 TYPE 2, CLASS IIB, GRADE 15 FM-123-2	 [C]			X																	
BMS 5-129 TYPE 2, CLASS IIC, GRADE 15 FM-123-5	 [C]			X																	
BMS 5-129 TYPE 4, GRADE 10 AF-163 EA9628	 [K] [AI] [G]	X																			
BMS 5-141 EA9394	 [G]	X																			
BMS 5-154 TYPE II, CLASS 1, GRADE 05 METLBOND 1515-3M 05 PSF ADH. FILM METLBOND 1515-3M-HT 05 PSF ADH. FILM PL 795, 05 PSF ADH. FILM	 [AF] [AF] [AG]				X																

Adhesives, Adhesive Films, Potting Compounds, and Resins
Figure 3 (Sheet 2)

MATERIAL	SOURCE	SUBJECT																			
		51-40-5	51-40-6	51-40-13	51-40-14																
ADHESIVE FILMS (CONT)																					
BMS 5-154 TYPE II, CLASS 2, GRADE 05 PL 795, 05 PSF ADH. FILM	AG				X																
BMS 5-154 TYPE II, CLASS 1, GRADE 03 METLBOND 1515-3M 03 PSF ADH. FILM METLBOND 1515-3M-HT 03 PSF ADH. FILM PL 795, 03 PSF ADH. FILM	 AF AF AG				X																
BMS 5-154 TYPE II, CLASS 2, GRADE 03 PL 795, 03 PSF ADH. FILM	AG				X																
BMS 8-145 TYPE I FM-355 AF-131-2	 AH AI				X																

Adhesives, Adhesive Films, Potting Compounds, and Resins
Figure 3 (Sheet 3)

MATERIAL	SOURCE	SUBJECT																			
		51-30-8	51-40-1	51-40-5	51-40-6	51-40-8	51-40-9	51-40-12	51-40-13	51-40-14	51-40-15	53-20-2									
POTTING COMPOUNDS AND RESINS																					
BMS 5-28 TYPE I EC 167A WITH EC 167B HARDENER	B				X																
BMS 5-28 TYPE III EC 1511A WITH EC 1511B HARDENER	B		X				X														
BMS 5-28 TYPE 6 EC 1636A WITH EC 1636B HARDENER	B																				
BMS 5-28 TYPE 7, CLASS 1 CG 1305 WITH CG 1305 HARDENER	F						X				X										
FR 7162A WITH FR 7162B HARDENER	E																				
TYPE 7, CLASS 2 EC 89537A WITH EC 89537B HARDENER	B						X				X										
BMS 5-28 TYPE 15 EC 1615A WITH EC 1615B HARDENER	B											X									
BMS 5-28 TYPE 17 EC 1617A WITH EC 1617B HARDENER	B						X					X									
BMS 5-28 TYPE 19 EC 1619A WITH EC 1619B HARDENER	B				X																
BMS 5-29 TYPE I EPON 828/812 MIXED WITH VERSAMID 115/125 80055-30 OR -31	M N O				X	X	X														
BMS 8-201 TYPE II EC 50A WITH EC 946 HARDENER	B						X														
EC 50A WITH EC 9449 HARDENER	B																				

Adhesives, Adhesive Films, Potting Compounds, and Resins
Figure 3 (Sheet 4)

MATERIAL	SOURCE	SUBJECT																			
		51-30-8	51-40-1	51-40-5	51-40-7	51-40-8	51-40-9	51-40-12	51-40-13	51-40-14	51-40-15	53-20-2									
POTTING COMPOUNDS AND RESINS (CONT)																					
BMS 8-207 TYPE I, CLASS 1 EC 1838A WITH EC 1838B HARDENER MXR7774A WITH MXR7774B HARDENER	A O						X	X	X	X	X										
BMS 8-207 TYPE I, CLASS 2 FR40 WITH FR5413C HARDENER	D							X	X	X	X										
BMS 8-301 CLASS 1 EA9350 RESIN	F										X										
BMS 8-301 CLASS 2 FR 7020 EY 3804	D							X													
EC 156A WITH EC 941 HARDENER	B							X	X	X	X										
EC 156A WITH EC 156B HARDENER	B							X	X	X	X										
EPOX-O WELD KIT	D						X	X	X	X	X										
FR-5318S WITH FR-5318C HARDENER	D							X	X	X	X										
PHENOLIC MICROBALLOONS BJO-0939	H						X	X			X										
MILLED GLASS FIBERS	I						X	X			X										
ADHESIVE COMPONENTS																					
EPON 828 WITH CURING AGENT T	Z						X														
EPON 815 WITH CURING AGENT T	Z						X														
EC 50A WITH EC 9816 HARDENER	B						X					X									
EC 50A WITH EC 951 HARDENER	B						X														
EC 50A WITH EC 946 HARDENER	B						X														
EC 156 WITH EC 941 OR 956 HARDENER	B						X					X									

Adhesives, Adhesive Films, Potting Compounds, and Resins
Figure 3 (Sheet 5)

MATERIAL	SOURCE	SUBJECT																			
		51-40-5	51-40-6	51-40-7	51-40-8	51-40-9	53-20-2														
ADHESIVE COMPONENTS (CONT)																					
EC 8442 MOD III WITH EC 8442B HARDENER	B						X														
REFCOA EPOXY RESIN 87-3 (PART A) WITH REFCOA HARDENER QX-2648 (PART B)	P						X														
RESIN NO. 49X2 WITH MEK PEROXIDE	Q						X														
RESIN 5318S WITH RESIN 8318C HARDENER	D						X														
EPO TEK 417F PARTS A AND B	R						X														
LAMINAC 4146	S			X																	
LAMINAC 4147	S			X																	
PLASKON 951	T			X																	
LUPERCO ATC CATALYST	U			X																	
GAROX BZP CATALYST	V			X																	
LUPERCOL DDM CATALYST	U			X																	
GAROX MEK CATALYST	V			X																	
COBALT NAPTHALENE, 6% COBALT SOLUTION				X																	
ANTIMONY TRI-OXIDE FIRE INHIBITOR	W			X																	
BMS 5-90 TYPE II CLASS 250/350-10-10 THERMOFOAM 3050 AF-3024	 G AK		X																		
ADHESIVE PRIMERS																					
EC 776 SR	A				X																
RTV 1200	X	X																			
DESOTO 513-707 WITH 910-787 CURING SOLUTION AND 020-702 THINNING SOLVENT	Y	X																			
BMS 5-89 TYPE I, GRADE A BR-127-EE OR BR-127-THF EC3960 TYPE I, GRADE B BR-127-EE TYPE II BR-6747	 C A K L AI C AF	 X X X																			

Adhesives, Adhesive Films, Potting Compounds, and Resins
Figure 3 (Sheet 6)

NOTES

[A] 3M
3M CENTER
ST. PAUL, MINNESOTA 55101

[B] CIBA-GEIGY CORPORATION
FURANE PRODUCTS DIVISION
5121 SAN FERNANDO ROAD W.
LOS ANGELES, CALIFORNIA 90039

[C] CYTEC INDUSTRIES
CYTEC ENGINEERED MATERIALS
1300 REVOLUTION STREET
HAVRE DE GRACE, MARYLAND 21078

[D] FIBER-RESIN CORPORATION
170 PROVIDENCIA AVE.
P.O. BOX 4187
BURBANK, CALIFORNIA 91503

[E] FIBER RESIN CORPORATION
C/O ATACS PRODUCTS, INC.
P.O. BOX 88237
SEATTLE, WASHINGTON 98188

[F] CIBA-GEIGY CORPORATION
REN PLASTICS
4917 DAWN AVENUE
EAST LANSING, MICHIGAN 48823

[G] DEXTER AEROSPACE MATERIALS DIV.
2850 WILLOW PASS ROAD
P.O. BOX 312
PITTSBURG, CALIFORNIA 94565-0031

[H] UNION CARBIDE CORP.
CHEMICAL AND PLASTICS DIVISION
BOUND BROOK, NEW JERSEY 08805

[I] OWENS CORNING FIBERGLAS CORP.
608 MADISON AVENUE
TOLEDO, OHIO 43604

[J] UNIROYAL INC.
ADHESIVES AND COATINGS
312 N. HILL STREET
MISHAWAKA, INDIANA 46544

[K] 3M FRANCE
B.P. 183
TILLOY LEZ CAMBRAI
59404 CAMBRAI, CEDEX
FRANCE

[L] 3M SUMITOMO, AC&S DIVISION
8-8 MINAMIHASHIMOTO 3-CHOME
SAGAMIHARA-SHI KANAGAWA, 229
JAPAN

[M] DELETED

[N] HENKEL CORPORATION
2010 EAST HENNEPIN AVE.
MINNEAPOLIS, MINNESOTA 55413

[O] FIBERITE COMPOSITE MATERIALS
645 NORTH CYPRESS STREET
P.O. BOX 787
ORANGE, CALIFORNIA 92666

[P] KING FIBERGLASS CORPORATION
366 W. NICKERSON ST.
SEATTLE, WASH. 98119

[R] EPOXY TECHNOLOGY
65 GROVE STREET
WATERTOWN, MASSACHUSETTS 02172

[S] AMERICAN CYANAMID CORPORATION
PLASTICS DIVISION
BERDEN AVENUE
WAYNE, NEW JERSEY 07472

Adhesives, Adhesive Films, Potting Compounds, and Resins
Figure 3 (Sheet 7)

NOTES (CONT)

[T] ALLIED CHEMICAL CORPORATION
P.O. BOX 132 M
MORRISTOWN, NEW JERSEY 07960

[U] PENNWALT CORPORATION
LUCIDOL DIVISION
1740 MILITARY ROAD
BUFFALO, NEW YORK 14240

[V] RAM CHEMICAL INCORPORATED
210 E. ALONDRA BLVD
GARDENA, CALIFORNIA 90247

[W] HARSHAW CHEMICAL CO.
1945 E 9TH ST.
CLEVELAND, OHIO 44106
OR
J. T. BAKER CHEMICAL CO.
600 BORAD ST. N.
PHILLIPSBURG, NEW JERSEY 08865

[X] DOW CORNING CORPORATION
3901 SOUTH SAGINAW ROAD
MIDLAND, MICHIGAN 48641-2721

[Y] DE SOTO INCORPORATED PACIFIC PLANT
1608 FOURTH STREET
BERKELEY, CALIFORNIA 94710

[Z] SHELL OIL COMPANY
ONE SHELL PLAZA
P.O. BOX 2463
HOUSTON, TEXAS 77001

[AA] LADD RESEARCH INDUSTRIES
P.O. BOX 1005
BURLINGTON, VERMONT 05402

[AB] DOW CHEMICAL COMPANY
2020 DOW CENTER
MIDLAND, MICHIGAN 48640

[AC] KING FIBERGLASS CORPORATION
366 WEST NICKERSON STREET
SEATTLE, WASHINGTON 98119

[AD] WILMINGTON CHEMICAL CORPORATION
RYIES LANE
P.O. BOX 66
WILMINGTON, DELAWARE 19899

[AE] MAGNOLIA PLASTICS, INC.
5547 PEACHTREE INDUSTRIAL BLVD.
CHAMBLEE, GEORGIA 30341

[AF] CYTEC INDUSTRIES
CYTEC ENGINEERED MATERIALS
1440 N KRAEMER BOULEVARD
ANAHEIM, CA 92806

[AG] SOVEREIGN ENGINEERED ADHESIVES
123 WEST BARTGES STREET
AKRON, OHIO 44311-1081

[AH] CYTEC INDUSTRIES
CYTEC ENGINEERED MATERIALS
1300 REVOLUTION STREET
HAVRE DE GRACE, MARYLAND 21078

[AI] 3M COMPANY
3211 EAST CHESTNUT EXPRESSWAY
SPRINGFIELD, MISSOURI 65802

[AJ] BMS 5-90, TYPE 2N, CLASS 250/350-10-10, GRADE 50 IS REPLACED.

[AK] CYTEC INDUSTRIES
CYTEC ENGINEERED MATERIALS
FILE NO. 54162
LOS ANGELES, CA 90074-4162

Adhesives, Adhesive Films, Potting Compounds, and Resins
Figure 3 (Sheet 8)

MATERIAL	SOURCE	SUBJECT																		
		51-10-1	51-10-2	51-40-1	51-40-5	51-40-6	51-40-7	51-40-8	51-40-9	51-40-12	51-40-13	51-40-14	51-40-15	53-20-2						
ABRASIVES																				
240 GRIT ALUMINUM OXIDE PAPER	ANY SOURCE	X							X											
320 GRIT ALUMINUM OXIDE PAPER	ANY SOURCE	X			X				X											
400 GRIT ALUMINUM OXIDE PAPER	ANY SOURCE	X	X																	
NO. 80 SANDPAPER	ANY SOURCE									X	X	X	X							
NO. 150 SANDPAPER	ANY SOURCE									X	X	X	X							
NO. 180 SANDPAPER	ANY SOURCE						X		X					X						
NO. 160 EMERY CLOTH	ANY SOURCE						X													
TYCRO, TYPE 3A, ALUMINUM OXIDE WHEELS	A		X																	
SCOTCHBRITE PAD, TYPE A, VERY FINE ALUMINUM OXIDE	A		X			X		X												
NO. 240 SCOTCHBRITE ABRASIVE	A									X	X	X	X							
NO. 400 SILICONE CARBIDE CLOTH MESH	ANY SOURCE					X														
SPIRAPOINT CONES	B	X																		
ALUMINUM OXIDE DISCS FOR MUSHROOM SANDING PAD	B	X																		
ALUMINUM OXIDE ABRASIVE FOR DRUM SANDING	ANY SOURCE	X																		
GRIND-O-FLEX SANDING WHEEL WITH NO. 180 GRIT ALUMINUM OXIDE ABRASIVE	C	X																		
EMERY WHEEL NO. 180 GRIT	ANY SOURCE						X													
NO. 180 GRIT FOR GRIT BLASTING	ANY SOURCE								X											
ALUMINUM WOOL	ANY SOURCE	X		X		X								X						
DUTCH HOUSEHOLD CLEANSER	ANY SOURCE					X														

Abrasives
Figure 4 (Sheet 1)

165353

NOTES

[A] 3M
3M CENTER
ST PAUL, MINNESOTA 55101

[B] BEHR-MANNING COMPANY
TROY, NEW YORK

[C] MERIT PRODUCTS INCORPORATED
3691 LEANWEE AVENUE
LOS ANGELES, CALIFORNIA

Abrasives
Figure 4 (Sheet 2)

MATERIAL	SOURCE	SUBJECT																			
		51-10-1	51-10-2	51-10-7	51-30-2	51-30-9	51-40-5	51-40-6	51-40-7	51-40-8	51-40-9	51-40-12	51-40-13	51-40-14	51-40-15	53-20-2	55-20-1	55-40-1	57-50-1		
CHEESECLOTH	ANY SOURCE		X				X														
CETYL ALCOHOL	ANY SOURCE				X	X															
LAURIC ACID	ANY SOURCE					X															
BOELUBE 100A	B			X	X																
RELEASE PLY "C"	D							X	X	X	X	X	X	X	X	X					
SOLID FEP PARTING FILM	C	X						X	X	X	X	X	X	X	X	X					
PERFORATED FEP PARTING FILM	ANY SOURCE	X						X	X	X	X	X	X	X	X	X					
PE PARTING FILM	ANY SOURCE								X												
PVA PARTING FILM	L							X	X												
TEFLON PARTING FILM	ANY SOURCE										X			X							
PERFORATED TEFLON FILM	M							X			X			X	X	X					
MYLAR OR TEDLAR FILM	C							X	X	X	X	X	X	X	X	X					
NYLON FILM	ANY SOURCE																				
TEMPILSTICKS	ANY SOURCE OR I							X	X												
AIRWEAVE SS	D											X	X	X	X						
EXTRUDED SEALING COMPOUND	D N O											X	X	X	X						
BMS 8-289 TYPE 0,CLASS 250,GRADE 1 CYCOM AEL-200-1/1100 C-CLAD H-250-025	 E F												X								
BMS 8-289 TYPE 0,CLASS 250,GRADE 2 C-CLAD H-250/350-002	 F												X								
BMS 8-289 TYPE 0,CLASS 350,GRADE 1 CYCOM AEL-100-1/1100	 E													X							

Miscellaneous Materials
Figure 5 (Sheet 1)

MATERIAL	SOURCE	SUBJECT																			
		51-10-1	51-10-2	51-10-7	51-30-2	51-30-9	51-40-5	51-40-6	51-40-7	51-40-8	51-40-9	51-40-12	51-40-13	51-40-14	51-40-15	53-20-2	55-20-1	55-40-1	57-50-1		
BMS 8-289 TYPE O,CLASS 350,GRADE 2 C-CLAD H-250/350-002	F													X							
FILTER-POLARIZED	G						X														
SCREEN WIRE #16 MESH, 0.018 DIA WIRE CRS TYPE 304	H						X														
BLEEDER CLOTH OSNABURG CLOTH UNBLEACHED CCC-C-429	ANY SOURCE										X										
3M-Y436 ALUMINUM FOIL TAPE	A																X	X	X		
NO. 472 BLACK PLASTIC FILM TAPE	A							X													
NO. 420 LEAD TAPE	A															X					
P-421 TEFLON TAPE	J															X					
TEMP-R-TAPE TV TEFLON TAPE	K															X					

Miscellaneous Materials
Figure 5 (Sheet 2)

165355

NOTES

[A] 3M
3M CENTER
ST. PAUL, MINNESOTA 55101

[B] THE ORELUBE CORPORATION
201 EAST BETHPAGE ROAD
PLAINVIEW, NEW YORK 11803

[C] E.I. DUPONT DE NEMOURS AND CO., INC.
1007 MARKET STREET
WILMINGTON, DELAWARE 19898

[D] AIRTECH INTERNATIONAL INC.
2542 E. DE LAMO BLVD
P.O. BOX 6207
CARSON, CALIFORNIA 90749

[E] AMERICAN CYANAMID
ENGINEERING MATERIAL DEPT.
BLOOMINGDALE PLANT
OLD POST ROAD
HAVRE DE GRACE, MARYLAND 21078

[F] HILL INDUSTRIES, INC.
1005 17TH STREET N.W.
PUYALLUP, WASHINGTON 98371

[G] WILCO COMPANY
5519-6TH AVE. SO.
SEATTLE, WASHINGTON 98108

[H] PACIFIC WIRE WORKS, INC.
2743 - 13TH S.W.
SEATTLE, WASHINGTON 98124

[I] TEMPIL DIVISION
BIG THREE INDUSTRIES, INC.
2901 HAMILTON BLVD.
SOUTH PLAINFIELD, NEW JERSEY 07080

[J] PERMACEL
U.S. HIGHWAY NO. 1
NEW BRUNSWICK, NEW JERSEY 08903

[K] THE CONNECTICUT HARD RUBBER CO.
407 EAST STREET
NEW HAVEN, CONNECTICUT 06509

[L] REYNOLDS COMPANY
GROTTOES, VA

[M] UNIVERSAL PLASTICS
SEATTLE, WA

[N] SCHNEE MOREHEAD CHEMICALS, INC.
111 N. NURSERY ROAD
IRVING, TX 75060

[O] ATACS PRODUCTS
P.O. BOX 88237
SEATTLE, WA

Miscellaneous Materials
Figure 5 (Sheet 3)

REPAIR SEALING

1. General

A. 51-31-0 of the Airplane Maintenance Manual and 20-50-19 of the Standard Overhaul Practices Manual contains procedures for sealing of repairs and the types of sealants to use. Certain areas of the fuselage and wing have been sealed to form the pressurized zone of the fuselage and the integral fuel tanks. Other areas of the airplane have been sealed to provide protection from certain fluids, e.g., below the toilets and galley. Repairs to these areas and any other areas that have been sealed must be sealed.

B. Sealants are designated by a Boeing Material Specification (BMS) number. This is followed by a classification letter which denotes the method of application for which it is suited. Following the classification is a number which represents the maximum time available (in hours) for application at 75 ±5°F. For example:

	Designation	
BMS 5-95	Class B	-1/2
Spec. No.	Application Class	Application Time (Hrs)

C. The application class designation for sealants to Boeing Material Specifications are as follows: All classes are not necessarily available for any particular sealant.

Class A - Brush application
Class B - Injection, fillet or fay
Class C - Fay, when long squeeze out life is required
Class D - Extra heavy for hole filling
Class E - Sprayable as a coating
Class F - Sprayable as a primer

BOEING PROPRIETARY - Copyright © - Unpublished Work - See title page for details.

D. See Fig. 1 for substitute sealants. Sealants specified in repairs have been selected for their special qualities. Substitute sealants shown in Fig. 1 can be used when the specified sealant is not available.

CAUTION: DO NOT SEAL DRAIN HOLES. KEEP DRAIN PATHS CLEAR. A CORROSIVE ENVIRONMENT WILL RESULT IF DRAIN HOLES AND DRAIN PATHS ARE NOT KEPT CLEAR.

E. External drain holes and internal drain paths are provided to prevent water and other fluids from collecting within the airplane. Do not fill or cover these drain holes and drain paths during sealant application. Refer to 51-41-01 of the Airplane Maintenance Manual for location of drain holes and drain paths.

CAUTION: DO NOT USE TOOLS THAT CAN CAUSE DAMAGE WHEN YOU REMOVE SEALANT FROM STRUCTURAL PARTS. DAMAGE WILL REDUCE THE FATIGUE STRENGTH AND DURABILITY OF THE STRUCTURE.

F. If you remove sealant from a structural part, be careful not to cause damage to the part surface.

(1) Only use approved sealant removal tools. Refer to AMM 51-30-0.

(2) Examine the structure after you remove the sealant to see if there are nicks, scratches, scribe marks or other damage. If you find damage, refer to instructions in the applicable allowable damage section of the SRM before you continue.

BOEING PROPRIETARY - Copyright © - Unpublished Work - See title page for details.

PERMITTED SUBSTITUTES FOR INITIAL SPECIFIED SEALANT							
INITIAL SPECIFIED SEALANTS	PERMITTED ALTERNATIVE SEALANTS						
	BMS 5-45	BMS 5-63	BMS 5-95	BMS 5-142 [A]	PR-1826 [B]	PR-1828 [B]	BMS 5-150
BMS 5-19	YES	NO	NO	NO	YES	NO	NO
BMS 5-26	SEE TABLE III	NO	NO	NO	YES	YES	NO
BMS 5-32	YES	NO	YES	YES	YES	YES	NO
BMS 5-45	---	NO	NO	NO	YES	NO	NO
BMS 5-63	NO	---	NO	NO	NO	NO	NO
BMS 5-79	YES	NO	SEE TABLE II	YES	YES	YES	NO
BMS 5-95	YES	NO	---	YES	YES	YES	YES (CLASS B-2 ONLY)
BMS 5-142	YES	NO	YES	---	YES	YES	YES

TABLE I

BMS 5-79 SEALANT ALTERNATIVES	
INITIAL MATERIAL	ALTERNATIVE MATERIAL
BMS 5-79	BMS 5-95
CLASS B-1/2	CLASS B-1/2
CLASS B-2	CLASS B-2
CLASS B-4	CLASS B-4
CLASS B-8	NONE
CLASS C-24	CLASS C-20
CLASS C-48	CLASS C-80
CLASS D-2	BMS 5-16

TABLE II

NOTES

[A] THIS ALTERNATIVE IS NOT PERMITTED FOR MATING SURFACE SEAL, PRE-PACK SEALING, AND WET FASTENER INSTALLATION PROCEDURES.

[B] YOU MUST APPLY A LAYER OF ADHESION PROMOTOR BEFORE YOU APPLY THE SEALANT.

Substitute Sealants Data
Figure 1 (Sheet 1)

BOEING PROPRIETARY - Copyright © - Unpublished Work - See title page for details.

BMS5-26, TYPES, CLASSES, GRADE	SUPERSEDED BY BMS5-45, CLASSES, GRADE
TYPE I, CLASS A-1/2, GRADE 1	CLASS A-2, GRADE 1 OR GRADE 2
TYPE I, CLASS A-2, GRADE 1	CLASS A-2, GRADE 1 OR GRADE 2
TYPE I, CLASS B-1/2	CLASS B-1/2
TYPE I, CLASS B-2	CLASS B-2
TYPE II, CLASS A-2, GRADE 1	CLASS A-2, GRADE 1
TYPE II, CLASS A-2, GRADE 2	CLASS A-2, GRADE 2
TYPE II, CLASS B-2	CLASS B-2
TYPE II, CLASS C-24	CLASS C-24
TYPE II, CLASS C-48	CLASS C-48
TYPE II, CLASS C-168	CLASS C-168

TABLE III

Substitute Sealants Data
Figure 1 (Sheet 2)

BOEING PROPRIETARY - Copyright © - Unpublished Work - See title page for details.

EROSION PROTECTION

1. General

   A. The leading edges of air inlets, slats, horizontal stabilizer and vertical stabilizer may be damaged by erosion. Erosion coatings or tape applied to the affected areas will protect the metal. When the coating or tape becomes eroded it must be removed and new coating or tape must be applied. Refer to 57-50-3, figure 6 for erosion limits.

      NOTE: Symmetry between left and right wing should be maintained with respect to erosion coating or tape.

   B. Preparation of the eroded surface for erosion protection, including alodining, is described in the appropriate chapter.

2. Materials

   A. See Fig. 2 for list of qualified erosion control materials and suppliers.

3. Surface Preparation for Applying Erosion Coating or Tape

   WARNING: CLEANING AND COATING MATERIALS ARE TOXIC AND FLAMMABLE.USE ADEQUATE VENTILATION AND FIRE PRECAUTIONS.

   CAUTION: THE METAL LEADING PORTION OF THOSE FINS THAT HAVE HF ANTENNAS SHOULD NOT BE COATED WITH RAIN EROSION COATING BECAUSE OF LIKELY DETRIMENTAL EFFECTS ON THE HF SYSTEM PERFORMANCE

   NOTE: The HF flush antenna includes a fiberglass section on the fin leading edge which is covered with a rain erosion coating. This coating will require replacement, with the frequency of replacement dependent upon the operator's erosion environment.

   A. Ensure that surfaces to receive erosion coating or tape have been properly prepared.

      (1) If surfaces are new, they need only to be cleaned with cheesecloth moistened with solvent, Series 94 (Ref AMM/SOPM 20-30-94) and wiped dry with clean cheesecloth.

      (2) Repaired surfaces should be protected with Alodine 1000. Surfaces repaired by abrasive blast should be spray cleaned with solvent, Series 94 (Ref AMM/SOPM 20-30-94) or water. Do not use cloth to clean rough surfaces to receive erosion coating. Lint deposited on the blasted area when covered with erosion coating shortens the life of the coating.

B. Where erosion coating is to be used, mask the surrounding area as follows:

(1) Mask surfaces not to be coated to extend the erosion coating 1/2 inch beyond the eroded area.

(2) If the erosion is only slightly developed and not distinct enough to define the final shape of the eroded area, see Fig. 3 for area to be coated.

C. Masking is not necessary for the application of tape. Instead, locate and mark the leading edge for the position of the tape to be applied with a felt marking pen.

4. Application of Erosion Coating

A. Astrocoating

(1) Mix Astrocoat primer base 8200 with primer accelerator 8201 per the manufacturer's instructions.

(2) Apply primer by spray or brush to provide a dry film thickness of 0.0005-0.0015 inch.

(3) Dry at 70-80°F for a minimum of 2 hours and not more than 18 hours before overcoating.

(4) Mix Astrocoat Type I base RM115P-8000 with Astrocoat catalyst 8100 in accordance with manufacturer's instructions.

(5) Apply Astrocoat Type I by spraying coats of no more than 0.001 inch dry film thickness to build up a total thickness of 0.012 ±0.002 inch. Each coat should be set-to-touch before application of the next coat. This requires a drying time of approximately one hour at 70-75°F and a relative humidity of 40-50%. Time between coats should not exceed 18 hours.

(6) Immediately after applying the final Astrocoat Type I coat, remove the masking. This is done to lessen the possibility of removing the Astrocoat along with the masking. If the Astrocoat is properly applied, the final surface will be smooth, as valleys are filled in during successive coats.

(7) Allow the final coat to cure as shown in Fig. 1 for the temperature and relative humidity conditions prevailing before returning the airplane to service.

(8) Should radio precipitation static be excessive, apply Astrocoat Type II anti-static finish as follows:

(a) Mix a quantity of Astrocoat Type II base RM115AS with Astrocoat catalyst 8100 per manufacturer's instructions.

(b) Apply Astrocoat Type II by spray to provide a dry film thickness of 0.0015 inch, overlapping the edges of the previously applied Astrocoat Type I by 0.20 inch. Use of masking is recommended when Astrocoat Type II is applied.

(c) After the final application, cure for at least 8 hours at 70-75°F and a relative humidity of 40-50% before returning airplane to service.

B. Chemglaze and Elastomeric Coating

(1) Mix Chemglaze 9924 wash primer base with primer curing agent per the manufacturer's instructions.

(2) Apply primer by spray to provide a dry film thickness of 0.00025-0.0015 inch.

(3) Dry at 70-90°F for a minimum of 1 hour and not more than 24 hours before overcoating.

(4) Mix Elastomeric coating base with curing agent in accordance with manufacturer's instructions

(5) Apply Elastomeric coating by spraying coats of no more than 0.006-0.010 inch wet film thickness to build up a total dry thickness of 0.012 ±0.002 inch. Each coat should dry for a minimum of 2 hours at 70-90°F.

NOTE: If recoating or applying a topcoat and the elastomeric coating has dried more than 24 hours, wash according to BAC5744, Method 1, before applying the top coat.

(6) If a Topcoat application is desired, spray apply a light mist coat and follow with a full wet coat. Apply coats at 3 to 4 hour minimum and 24-hour maximum intervals, relative humidity 30-60%, until a dry film thickness of 0.0007-0.001 inch is achieved.

(7) Immediately after applying the final coat, remove the masking. This is done to lessen the possibility of removing the erosion coating along with the masking.

C. Chemglaze and Caapcoat

(1) Mix Chemglaze 9924 wash primer base with primer curing agent per the manufacturer's instructions.

(2) Apply primer by spray to provide a dry film thickness of 0.0005-0.001 inch.

(3) Dry at 70-90°F for a minumum of 1 hour and not more than 24 hours before overcoating.

(4) Mix the Caapcoat B-274 polyurethane in accordance with manufacturer's instructions.

(5) Apply the Caapcoat B-274 polyurethane in successive coats to achieve a dry film thickness of 0.008-0.014 inch. Allow a minimum of 10-20 minutes and a maximum of 2 hours between successive coats.

(6) Apply one wet cross-coat of catalyzed AS-P108 vehicle to the B-274 basecoat 1-1/2 to 2 hours after the final B-274 application.

(7) Caapcoat cures in 2-3 days at ambient conditions. Curing may be accelerated by heating to 150°F for 3 hours after an initial 24-hour ambient cure.

(8) Immediately after applying the final coat, remove the masking. This is done to lessen the possibility of removing the erosion coating along with the masking.

5. Application of Tape

A. Polyurethane Tape

(1) Prepare the tape by cutting and trimming to size. Recommended width is 6 inches.

(2) The pressure sensitive adhesive and the length of the precut tape may present problems in applying the tape to the exact location on the leading edge without creating wrinkles and creases. For ease of application, two methods for applying the tape are given.

METHOD A:

(a) Peel back the backing paper approximately 1 inch along the lengthwise edge and apply this edge to the mark. Remove the backing paper as the tape is pressed in position.

METHOD B:

(a) Wet the leading edge with a solution of one part detergent to 50 parts tap water. The wetted surface permits minor tape adjustments prior to final placement.

(b) Remove the paper backing from the tape. Starting at the top of the fin leading edge, or the outboard side of the horizontal stabilizer and wing leading edges, locate the tape and press against the metal surface.

(c) Use a rubber applicator to smooth down the tape working away from the centerline of the applied tape to squeeze out all air bubbles and detergent solution.

(d) Rub tape down well, using a clean cheesecloth and/or a small rubber roller. If a small air bubble is accidentally trapped under the tape, pin prick the bubble to permit the air to escape. Rub down well afterwards.

B. Application of Edge Sealer

(1) Prepare the two component edge sealer 7-C-20. Apply the sealer by brush so that there is an approximate 3/8-inch overlap on each side of the tape edge.

NOTE: The exterior surface must be thoroughly dry before the application of edge sealer.

(2) To produce a better feathered edge for aerodynamic smoothness, allow the remaining catalyzed edge sealer to stand for 1-1/2 to 2 hours to thicken. Apply the thicker mixture crosswise with a brush, the stroke starting on the metal surface up to and across the tape edge.

NOTE: The edge of the tape that receives direct airstream attack will lift or fray at this edge if not properly applied. It is recommended that several coats of the edge sealer be applied to this area, feathering out on the tape back approximately 1 to 2 inches from the edge.

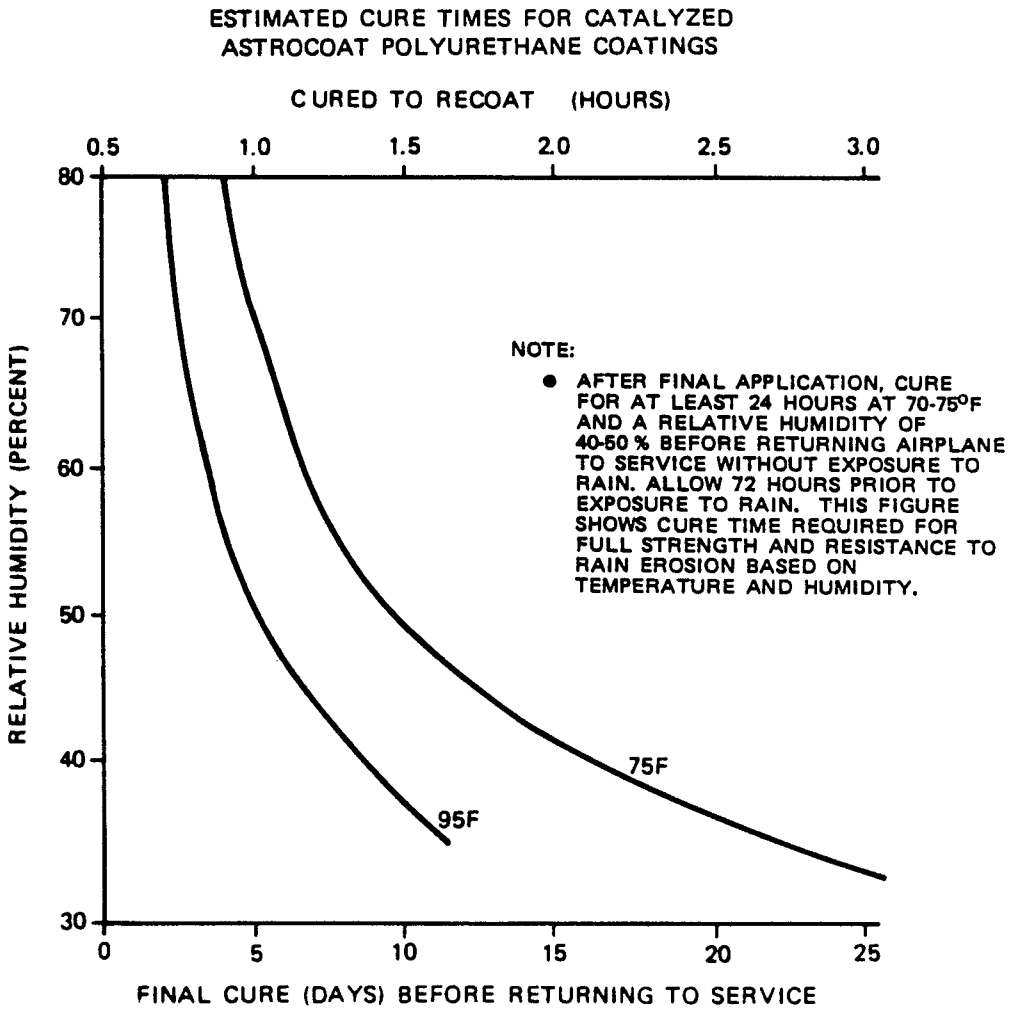

Estimated Cure Times for Catalyzed
Astrocoat Polyurethane Coatings
Figure 1

MATERIAL	SUPPLIER
ASTROCOAT	
PRIMER BASE 8200 AND PRIMER ACCELERATOR 8201	A
ASTROCOAT TYPE I BASE RM115P–8000 AND CATALYST 8100	A
ASTROCOAT TYPE II BASE RM115AS–WITH CATALYST 8100	A
CHEMGLAZE POLYURETHANE COATINGS	
PRIMER–CHEMGLAZE 9924 WASH PRIMER	B
ELASTOMERIC POLYURETHANE COATING, CHEMGLAZE M–SERIES	B
TOPCOAT, CHEMGLAZE II POLYURETHANE	B
CAAPCOAT POLYURETHANE COATINGS	
CAAPCOAT B–274 BLACK	C
AS–P108 ANTISTATIC POLYURETHANE	C
POLYURETHANE TAPE NO. Y8561	D
EDGE SEALER – CLEAR POLYURETHANE	
7C–20	E
SMOOTHER AND DENT FILLER	
BMS 5–28 TYPE 3 EPOCAST 15–11 WITH 9614 HARDENER	F

NOTES

A STERLING LACQUER MANUFACTURING CO.
3150 BRANDON AVE.
ST. LOUIS, MISSOURI 63103

B HUGHSON CHEMICAL LORD CORPORATION
2000 W. GRANDVIEW BLVD
ERIE, PENNSYLVANIA 16512

C CAAP CO., INC.
P.O. BOX 2066
HUNTINGTON, CONNECTICUT 06484

D MINNESOTA MINING AND MFG. CO.
3M CENTER
ST. PAUL, MINNESOTA 55101

E DEXTER–MIDLAND DIVISION
THE DEXTER CORPORATION
31500 HAYMAN STREET
HAYWOOD, CALIFORNIA 94544

F FURANE PLASTICS, INCORPORATED
5121 SAN FERNANDO ROAD WEST
LOS ANGELES, CALIFORNIA 90039

Erosion Protection Materials
Figure 2

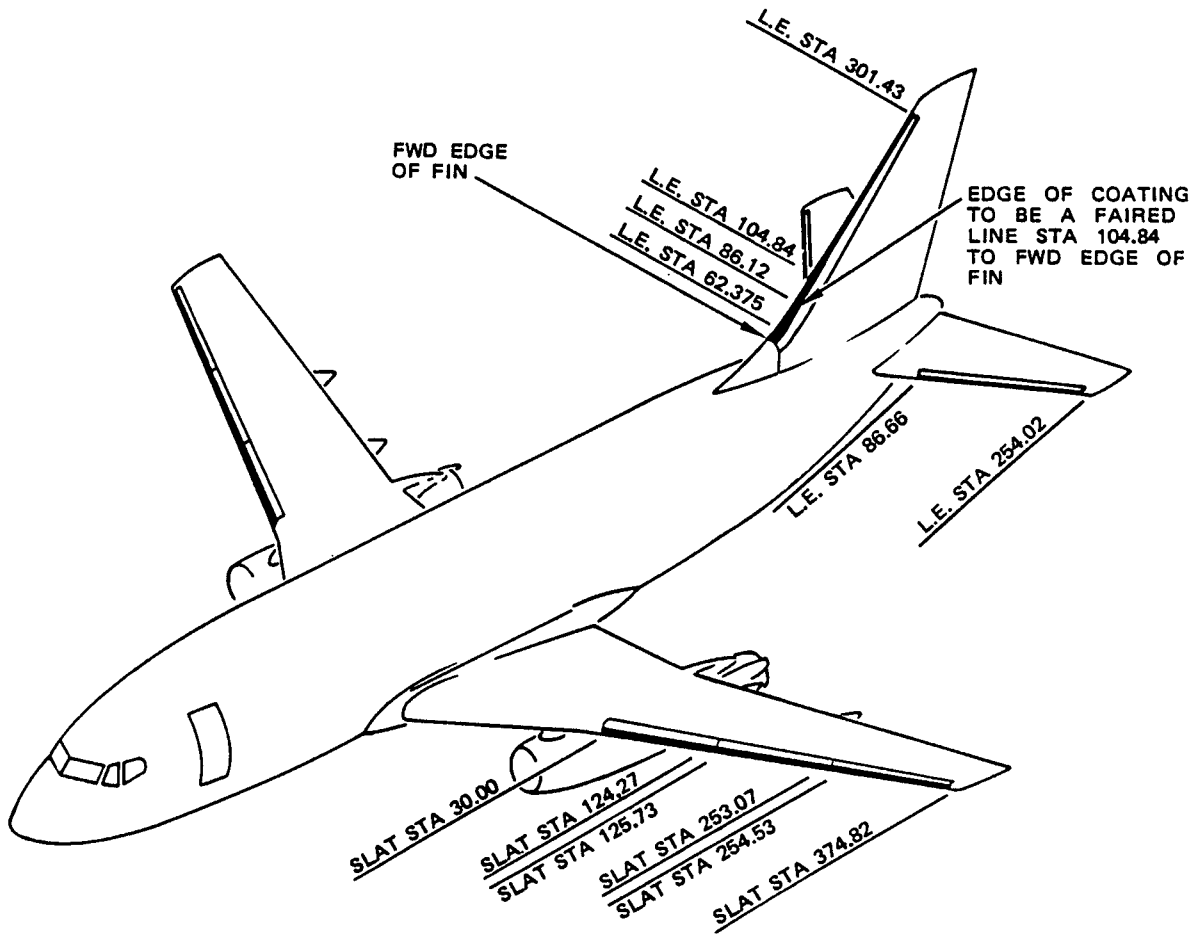

Erosion Coating Areas
Figure 3 (Sheet 1)

SLAT NO.	SLAT STA.	A	B	C	RIB
1	374.82	13.1	2.25	1.25	RIB APPROX 1.0 FROM OUTBD END OF SLAT
D	254.53	13.1	2.50	1.50	INBD RIB
2	253.07	13.1	2.50	1.50	OUTBD RIB
D	125.73	13.8	2.50	1.50	INBD RIB
3	124.27	13.8	2.60	1.60	OUTBD RIB
D	30.00	13.8	2.70	1.70	RIB APPROX 2.7 FROM INBD END OF SLAT

LEADING EDGE SLATS
TABLE I

NOTES

A DISTANCE TO EDGE OF COATING FROM T.E. OF SLAT

B WIDTH OF COATING

C WIDTH OF EROSION (ESTIMATED)

D UPPER AND LOWER EDGES OF COATING SHOULD BE STRAIGHT LINES PASSING THROUGH THE POINTS GIVEN AT BOTH ENDS OF EACH SLAT

Erosion Coating Areas
Figure 3 (Sheet 2)

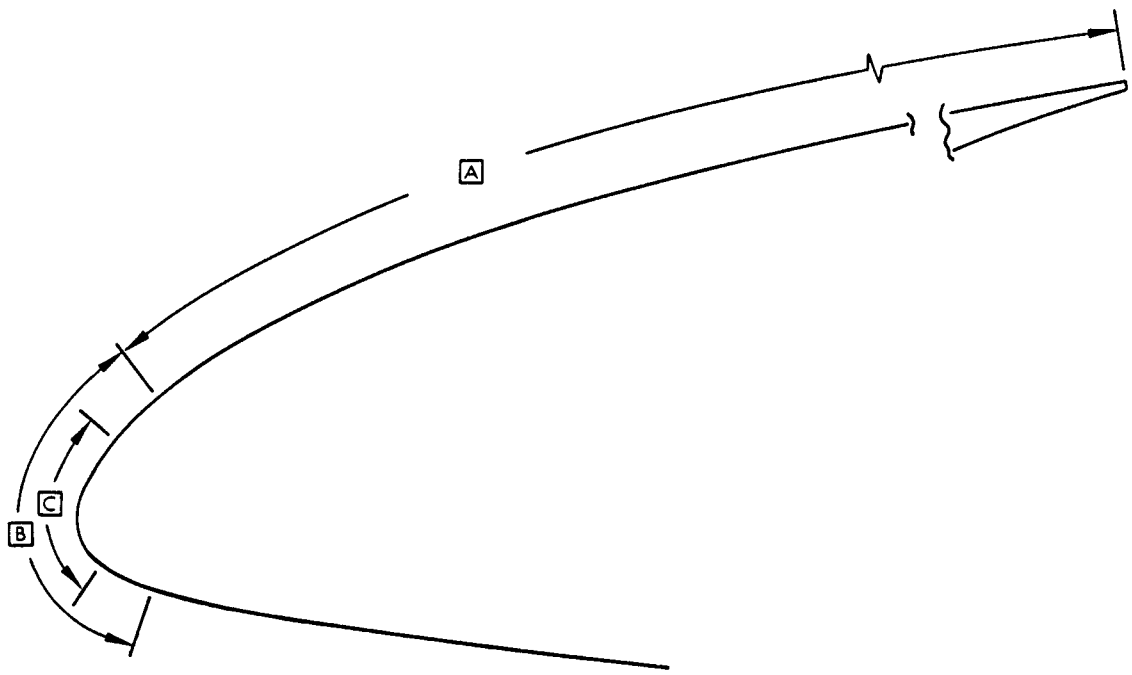

SLAT NO. 1 AT STA 374.82

NOTE

- ALL DIMENSIONS ALONG CENTERLINE OF RIB

Erosion Coating Areas
Figure 3 (Sheet 3)

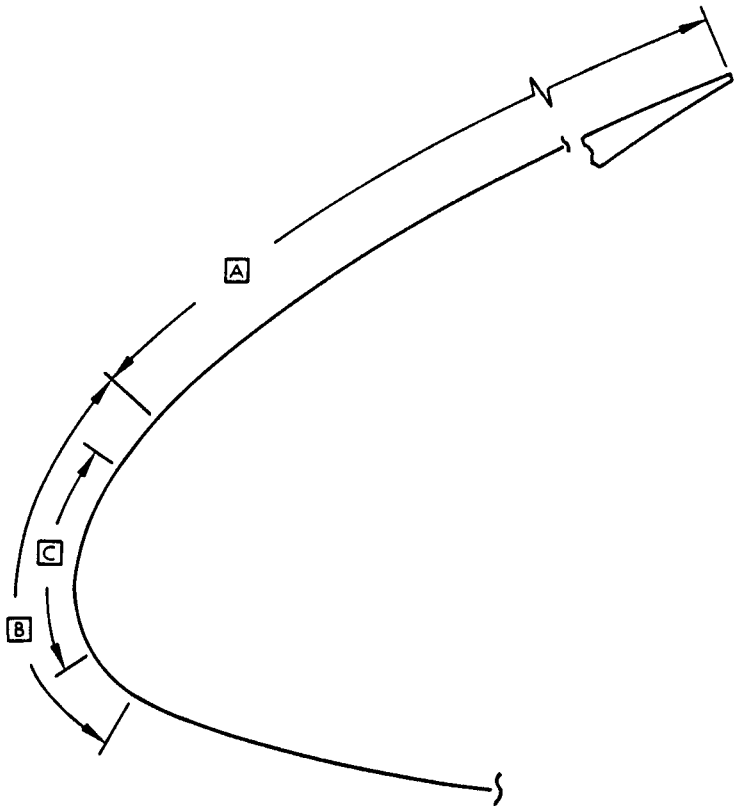

SLAT NO. 3 AT STA 30

NOTE

- ALL DIMENSIONS ALONG CENTERLINE OF RIB

Erosion Coating Areas
Figure 3 (Sheet 4)

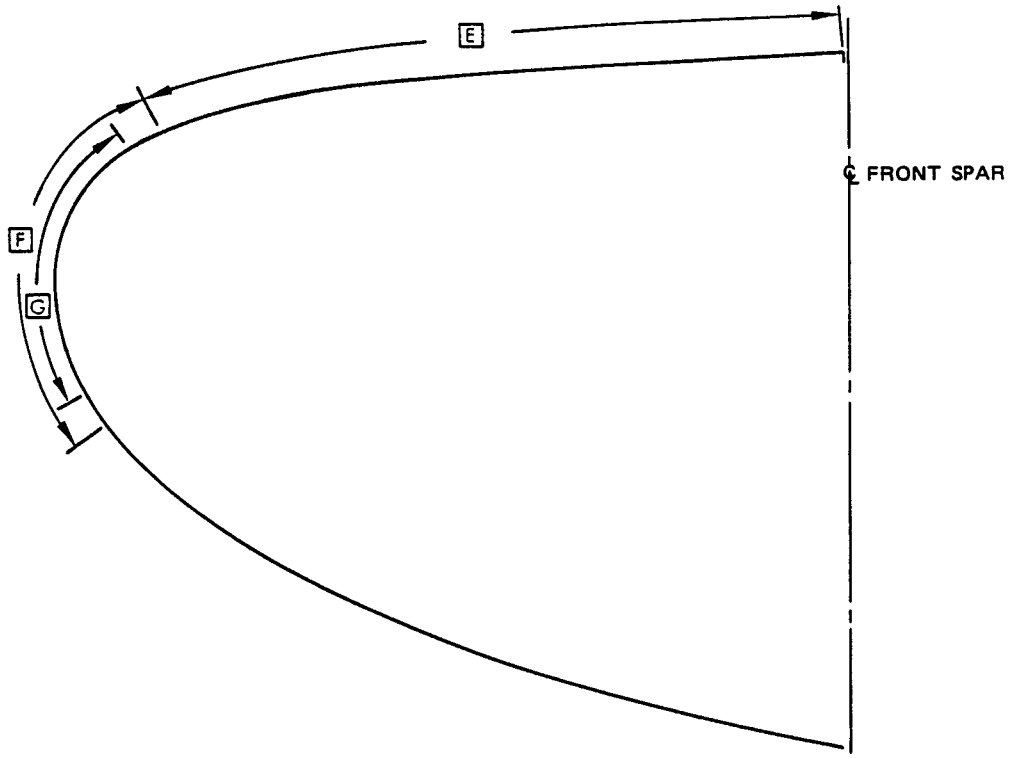

STABILIZER LEADING EDGE AT STA 86.66

NOTES

- ALL DIMENSIONS ALONG CENTERLINE OF RIB (INBD END OF REMOVABLE LEADING EDGE)
- UPPER AND LOWER EDGES OF COATING ARE STRAIGHT LINES PASSING THROUGH THE POINTS GIVEN IN THE SECTIONS AT L.E. STA 86.66 AND L.E. STA 254.02

E DISTANCE TO EDGE OF COATING FROM EDGE OF L.E. SKIN = 9.0

F WIDTH OF COATING = 5.3

G WIDTH OF EROSION = 4.3 (ESTIMATED)

Erosion Coating Areas
Figure 3 (Sheet 5)

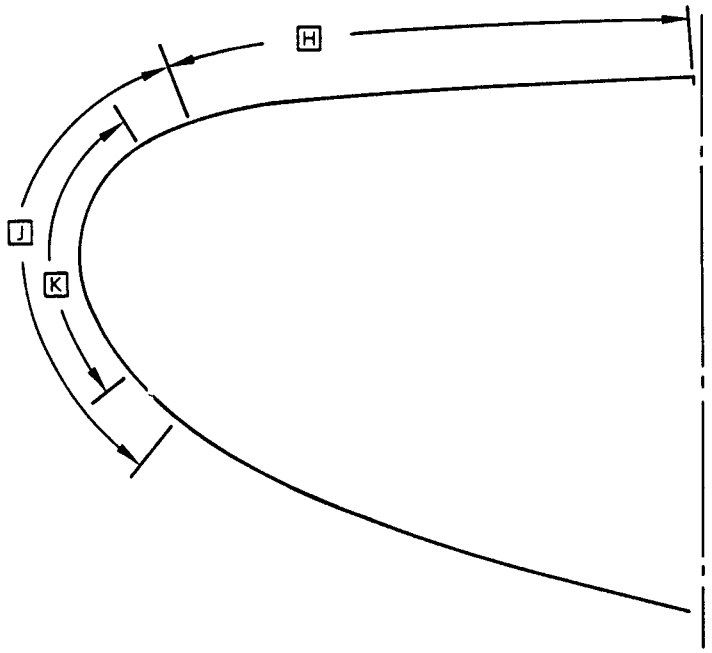

STABILIZER LEADING EDGE AT STA 254.02

NOTES

- ALL DIMENSIONS ALONG CENTERLINE OF RIB (OUTBD RIVETED RIB OF REMOVABLE LEADING EDGE)
- UPPER AND LOWER EDGES OF COATING ARE STRAIGHT LINES PASSING THROUGH THE POINTS GIVEN IN THE SECTIONS AT L.E. STA 86.66 AND L.E. STA 254.02

[H] DISTANCE TO EDGE OF COATING FROM EDGE OF L.E. SKIN = 4.2

[J] WIDTH OF COATING = 3.4

[K] WIDTH OF EROSION = 2.4 (ESTIMATED)

Erosion Coating Areas
Figure 3 (Sheet 6)

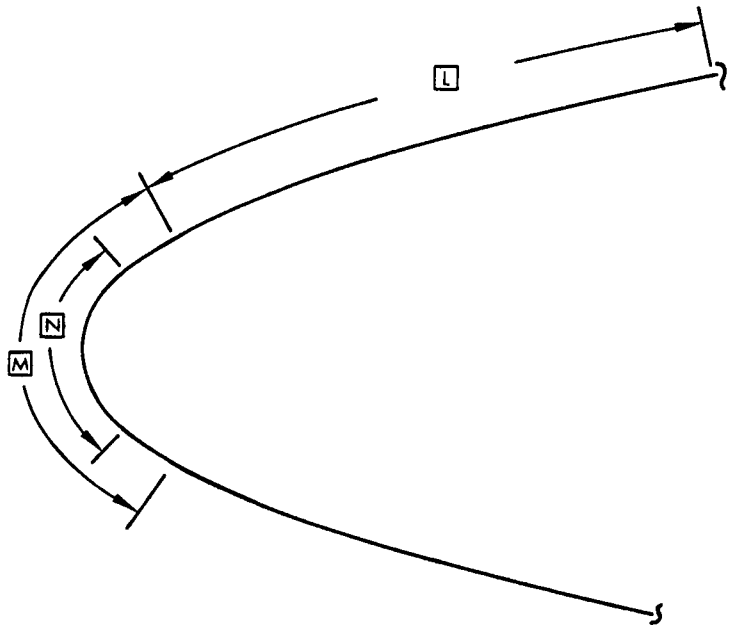

FIN LEADING EDGE AT STA 301.43

NOTES

- ALL DIMENSIONS ALONG CENTERLINE OF RIB (UPPER RIVETED RIB OF REMOVABLE LEADING EDGE)
- RIGHT AND LEFT EDGES OF COATING ARE STRAIGHT LINES PASSING THROUGH THE POINTS GIVEN IN THE SECTIONS AT STA 104.84 AND STA 301.43

[L] DISTANCE TO EDGE OF COATING FROM EDGE OF L.E. SKIN = 4.9

[M] WIDTH OF COATING = 2.6

[N] WIDTH OF EROSION = 1.6 (ESTIMATED)

Erosion Coating Areas
Figure 3 (Sheet 7)

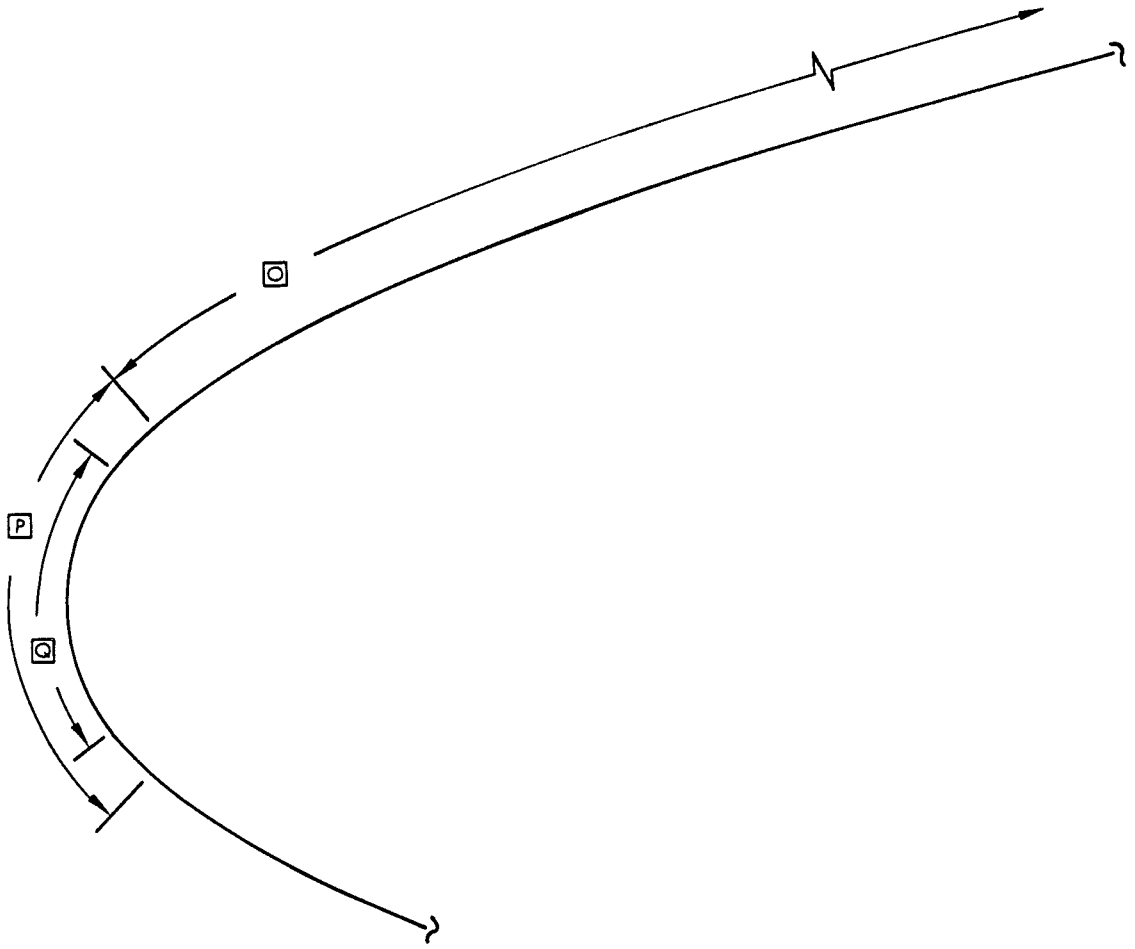

FIN LEADING EDGE AT STA 104.84

NOTES

- ALL DIMENSIONS ALONG CENTERLINE OF RIB (THIRD RIVETED RIB FROM LWR EDGE OF REMOVABLE LEADING EDGE)
- RIGHT AND LEFT EDGES OF COATING ARE STRAIGHT LINES PASSING THROUGH THE POINTS GIVEN IN THE SECTIONS AT STA 104.84 AND STA 301.43

O DISTANCE TO EDGE OF COATING FROM EDGE OF L.E. SKIN = 12.0

P WIDTH OF COATING = 3.4

Q WIDTH OF EROSION = 2.4 (ESTIMATED)

Erosion Coating Areas
Figure 3 (Sheet 8)

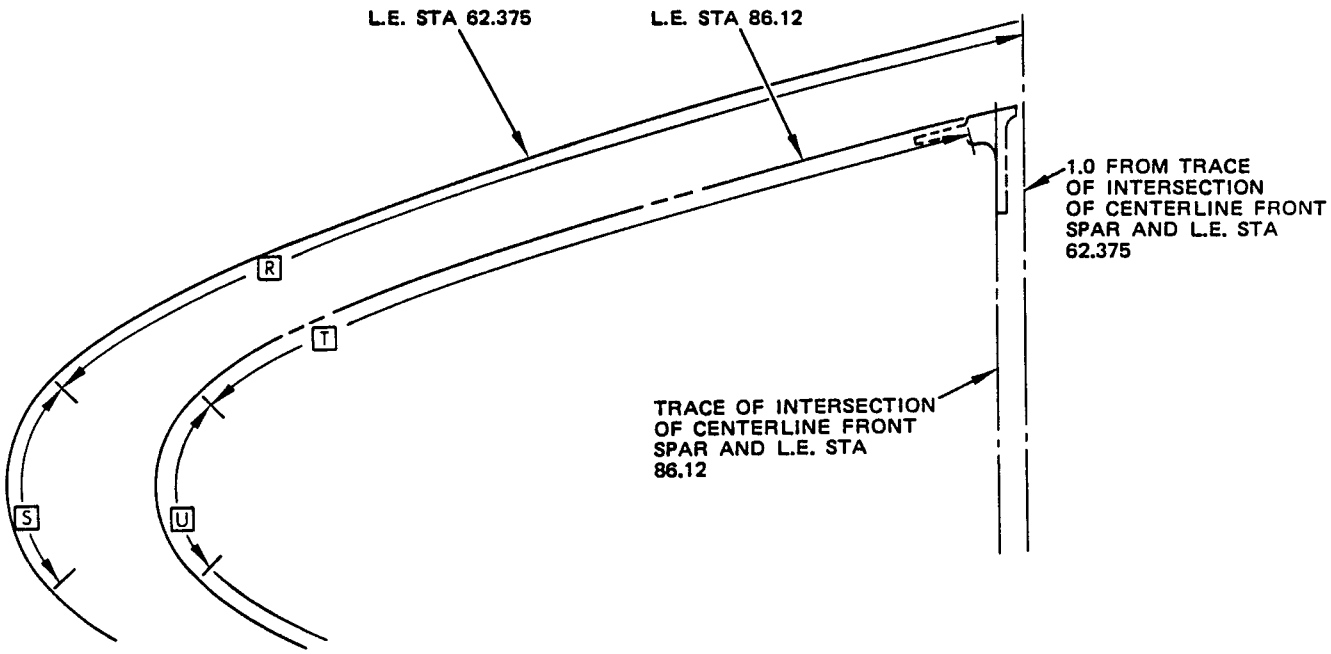

FIN LEADING EDGE AT STA 62.375 AND STA 86.12

NOTES

- R DISTANCE TO EDGE OF COATING FROM EDGE OF L.E. SKIN = 17.31
- S WIDTH OF COATING = 4.0
- T DISTANCE TO EDGE OF COATING FROM L.E. OF SKIN = 13.375
- U WIDTH OF COATING = 3.56

Erosion Coating Areas
Figure 3 (Sheet 9)

1. General

A. This section gives a list of the equipment and hand tools that are used to make repairs. This section also gives the necessary vendor data.

B. Refer to:

(1) Figure 1 for a list of repair equipment

(2) Refer to Figure 2 for a list of hand tools

C. Some of the procedures in this manual identify tools or equipment. You can use alternative tools that are equivalent unless the procedure tells you the specified tool or equipment item is mandatory. If you use alternative tools or equipment, make sure they give the same results and are as safe to the parts and personnel as the tools or equipment specified in the procedure.

TOOL	MANUFACTURER'S DESIGNATION	MANUFACTURER	REMARKS
AIR-BLAST GUN	VACU-BLAST JR., #41303 OR EQUIVALENT	VACU-BLAST WOODSON HOUSE AJAX AVENUE SLOUGH BERKSHIRE, SL1 4DS ENGLAND -OR- P.O. BOX 286 HERINGTON, KANSAS 67449	CLEAN METAL SURFACES
ASPIRATOR, VACUUM	VACUUM MODEL TD-260 OR EQUIVALENT	AIR-VAC ENGINEERING P.O. BOX 215 30 PROGRESS AVE SEYMOUR CT 06483 AIRTRONICS 1940 124TH AVE NE BLDG. A-107 BELLEVUE, WA 98005	CONVERTS AIR PRESSURE TO VACUUM
BAGS, PRESSURE	10-LB SAND OR SHOT BAGS	COMMERCIAL-ANY SOURCE	USE AS A SUBSTITUTE PRESSURE MEDIUM
BLANKET, HEATING	5 WATTS/IN^2 MINIMUM	ATACS PRODUCTS, INC. 14040 INTERURBAN AVE S TUKWILA, WA 98168 HEATCON COMPOSITE SYSTEMS 600 ANDOVER PARK E SEATTLE, WA 98188 -OR- UNIT 8, EDISON RD, ST. IVES, HUNTINGDON, CAMBRIDGE PE17 4LZ ENGLAND GMI 9 RUE BUFFAULT 75009 PARIS, FRANCE -OR- GMI/EMPTECH 5957 GLENDALE DRIVE CHILLIWACK, B.C., CANADA V2R 3A5 JR TECHNOLOGY LTD. 81 NORTH END, MELDRETH ROYSTON, HERTS, ENGLAND SG86NU PYROMETRIC SERVICE CORP. 1312 S. 96TH ST SEATTLE, WA 98108-5010 TAYCO ENGINEERING, INC. 10874 HOPE ST P.O. BOX 6034 CYPRESS, CA 90630 WICHITECH INDUSTRIES, INC. OAKLAND CENTER, 8990 RT. 108 COLUMBIA, MD 21045	TO PROVIDE HEAT FOR CURING ADHESIVE

Miscellaneous Equipment
Figure 1 (Sheet 1)

TOOL	MANUFACTURER'S DESIGNATION	MANUFACTURER	REMARKS
CLEANER, VACUUM [B]	INDUSTRIAL-TYPE MODEL #APN4423 (TORNADO); USE A 556AL BARREL AS A DUST RECEIVER	BREUER/TORNADO CORP. 7401 W. LAWRENCE AVE. CHICAGO, IL 60656	CLEAN UP SANDING DUST AND DEBRIS
CONTAINERS, 1 LITER BEAKER-TYPE, POLYETHYLENE	#13915-679 SHERWOOD OR EQUIV	V.W.R. SCIENTIFIC 355 TRECK DRIVE SEATTLE, WA 98188	MIXING RESINS AND POTTING COMPOUNDS
CONTAINERS, SAFETY, FOOT-LEVER-TYPE	METAL, EAGLE 906-FL OR EQUIV	V.W.R. SCIENTIFIC 355 TRECK DRIVE SEATTLE, WA 98188	HOLDING USED CLOTHES WITH TOXIC MATERIALS
CORK SHEET	0.125-IN.	COMMERCIAL - ANY SOURCE	
CAUL PLATE	FABRICATE LOCALLY USING 0.016 ALUMINUM SHEET		USE TO DISTRIBUTE PRESSURE OVER AREAS OF A REPAIR
COUNTERSINK, MICRO-STOP, 100° ADJUST-ABLE DRIVE	#6300-LARGE, #6400-SMALL, OR EQUIVALENT	MC MASTER-CARR P.O. BOX 740100 ATLANTA, GA 30374-0100 WWW.MCMASTER.COM	COUNTERSINKING HOLES FOR RIVETS, SCREWS, OR BOLTS
CUTTER, HONEYCOMB, VALVE STEM TYPE, TWO-PIECE	30-030-1 HOLDER [D] 30-030-2 CUTTER	ONSRUD CUTTER MFG CO. 800 LIBERTY DRIVE P.O. BOX 550 LIBERTYVILLE, IL 60048 OR ANY OTHER COMMERCIAL SOURCE	ALUMINUM HONEYCOMB CUTTER
CUTTER, HONEYCOMB, VALVE STEM TYPE ONE-PIECE	31-010 0.50 DIA [C] 31-015 0.75 DIA [C] 31-020 1.0 DIA [C] 31-025 1.5 DIA [D] 31-030 2.0 DIA [D]		ALUMINUM HONEYCOMB CUTTER
DRILL MOTOR [B]	ELECTRIC 600 RPM, MODEL 15C 1489 OR EQUIVALENT	AERO INDUSTRIAL TOOL 482 EAST MEADOW AVE. E. MEADOW, NY 11554	CONVENTIONAL DRILLING, SANDING, OR CIRCULAR SAWING
	PNEUMATIC, 1/4-IN. CHUCK, MODEL #3008-0 OR EQUIV-ALENT	CHICAGO PNEUMATIC 1800 OVERVIEW DR. ROCKHILL, SC 29730	
DRILL MOTOR, 90° ANGLE	PNEUMATIC, VARIABLE SPEED, MODEL #10L-1201B OR EQUIVALENT	AERO INDUSTRIAL TOOL 482 EAST MEADOW AVE. E. MEADOW, NY 11554	CONVENTIONAL DRILLING, SANDING, OR CIRCULAR SAWING
GAUGE, AIR PRESSURE	0 TO 100 PSI, MODEL J4654 OR EQUIVALENT	MARSH DISTRIBUTOR P.O. BOX 361 ANTIOCH, IL 60002	TO INDICATE AIR LINE PRESSURE
GAUGE, VACUUM	0 TO 32 IN. HG	MARSH DISTRIBUTOR P.O. BOX 361 ANTIOCH, IL 60002	TO INDICATE VACUUM LINE PRES-SURE
GLOVES, COTTON	WHITE, UNTREATED, LINTLESS	MC MASTER-CARR P.O. BOX 740100 ATLANTA, GA 30374-0100 WWW.MCMASTER.COM	USE FOR HANDLING CLEANED PARTS OR ADHESIVES
GLOVES, INSULATING	HEAT INSULATING	ANY SOURCE	USE FOR HANDLING HOT PARTS
HEATER ASSEMBLY [B]	HOT AIR, BF-400-10, OR EQUIVALENT	ENGINEERED AIR SYSTEMS 1270 N. PRICE RD. ST. LOUIS, MO 63132	HOT AIR BLOWER TO DUCT AIR TO AREA BEING CURED

Miscellaneous Equipment
Figure 1 (Sheet 2)

TOOL	MANUFACTURER'S DESIGNATION	MANUFACTURER	REMARKS
HEATER, AIR [B]	1000 TO 2000 WATTS, MODEL HGs 50110J	MASTER APPLIANCE CORP. 2420 18TH ST. RACINE, WI 53403	FOR HEAT-TACKING ADHESIVES, HEAT-DRYING HONEYCOMB CORE OR ASSEMBLIES, WARMING COMPOUNDS AND/OR RESINS
	ALTERNATE	IDEAL INDUSTRIES, INC. 1006 PARK AVENUE SYCAMORE, IL 60178	
LAMP, HEATING	250 TO 300 WATTS, EXPLOSIONPROOF, TUNGSTEN OR QUARTZ TUBE	MC MASTER-CARR P.O. BOX 740100 ATLANTA, GA 30374-0100 WWW.MCMASTER.COM	LOW-TEMPERATURE CURING OF ADHESIVES, POTTING COMPOUNDS, OR RESINS
LAMP, HEATING ASSEMBLY	25 OR 40/4 #375G30 OR EQUIVALENT	DELTROL CONTROLS CORP. 2740 SO. 20TH ST. MILWAUKEE, WI 53215	LOW-TEMPERATURE CURING OF ADHESIVES, POTTING COMPOUNDS, OR RESINS
MAT, FIBERGLASS	2 OZ FIBERGLASS OR 7500 TOOLING MAT	REN PLASTICS 5656 S. CEDAR ST. LANSING, MI 48909 DEXTER CORP. (HYSOL PRODUCTS) ONE DEXTER DRIVE SEABROOK, NH 03874	CAN BE USED FOR LAMINATED TOOLING, FIBERGLASS BLEEDER CLOTH, INSULATION MATERIAL, OR A SUBSTITUTE FOR OSNABURG BLEEDER CLOTH
MOTOR ASSEMBLY, PNEUMATIC	ARBOR SAW/MOTOR	AERO INDUSTRIAL TOOL 482 EAST MEADOW AVE. E. MEADOW, NY 11554	TO CUT AWAY DAMAGED MATERIAL
MULTITESTER	LOW CURRENT, LOW OHM, KELVIN-BRIDGE-TYPE	COMMERCIAL - ANY SOURCE	TAKING ELECTRONIC MEASUREMENTS
PEENING TOOL, POWER [B]	1/4-IN. STEM (DRILL ROD), SLOT END FOR FLAPPER STRIP MIL-B-1170, TYPE II, CLASS E, STYLE 1		USE FOR SHOT PEENING REQUIREMENTS
POWER SUPPLY, DC	REGAL LINE MODEL R2518 UNFILTERED BENCH MODEL R SERIES DC OR EQUIV.		USE AS POWER SOURCE FOR PHOSPHORIC ACID ANODIZING
RECORDER, TEMPERATURE, 24-POINT, AUTOMATIC CHART-TYPE	MODEL #15306836-24	HONEYWELL	MEASURING TEMPERATURE AT THE ADHESIVE CURE LINE BY THERMOCOUPLES; 1 THROUGH 24 POINTS AVAILABLE
RECORDER, TEMPERATURE, 1-POINT, INDIVIDUAL PRINTOUT, ROLLER CHART	MODEL #122 115-VOLT, 60-CYCLE	GULTON GRAPHIC INSTRUMENT 1900 S. COUNTRY TR. E. GREENWICH, RI 02818	MEASURING ONE THERMOCOUPLE ON A LINE CHART
REGULATOR, AIR PRESSURE	0 TO 125 PSI, MODEL 11-002-025 OR EQUIVALENT	C.A. NORGREN CO. 5400 S. DELEWARE ST. LITTLETON, CO 80120	MEASURE AND REGULATE AIR PRESSURE
REGULATOR, VACUUM	0- TO 30-INCH HG, OR EQUIVALENT	MC MASTER-CARR P.O. BOX 740100 ATLANTA, GA 30374-0100 WWW.MCMASTER.COM	MEASURING VACUUM AT THE ASSEMBLY

Miscellaneous Equipment
Figure 1 (Sheet 3)

TOOL	MANUFACTURER'S DESIGNATION	MANUFACTURER	REMARKS
SAFETY FACE SHIELD	TRU-SAFE #199-1 OR SAFELINE #6799 (10 BY 18-1/4) OR EQUIV	COMMERCIAL - ANY SOURCE	FOR FACE AND EYE PROTECTION
SAFETY FACE SHIELD HOLDER	RICE HEAD SHIELD #707 OR EQUIVALENT		HOLDS REPLACEABLE FACE SHIELD
SAFETY GLASSES	5944D SMOKE CLEAR LENSES OR EQUIVALENT	H.L. BOUTON CO. INC. BUZZARD BAY, MA 02532 MC MASTER-CARR P.O. BOX 740100 ATLANTA, GA 30374-0100 WWW.MCMASTER.COM	FOR EYE PROTECTION
SCALE, BALANCE	1.0 GRAM ACCURACY, MULTIPLE MODELS	METTLER 1900 POLARIS PKWY COLUMBUS, OH 43240 OR OHAUS CORPORATION 29 HANOVER RD FLORHAM PARK, NJ 07932	WEIGHING COMPOUNDS AND RESIN MIXTURES
SEALANT GUN	AIR-OPERATED OR EQUIVALENT GLUE GUN	MC MASTER-CARR P.O. BOX 740100 ATLANTA, GA 30374-0100 WWW.MCMASTER.COM	DISPENSING OF FILLERS AND SEALANTS
SHAVER, MICRO-RIVET-HEAD	MODEL 2T-405, ADJUSTABLE, OR EQUIVALENT	ADVANCED AIR TOOL CO., INC. 131 ALLEN BLVD. FARMINGDALE, NY 11735-5616	SHAVE PROTRUDING RIVET HEADS
SINE PLATE	0° TO 45° INCLINATION FROM HORIZONTAL POSITION	BROWN & SHARPE PRECISION PARK 200 FRENCHTOWN RD. N. KINGSTOWN, RI 02852	USE WITH CORE-SLICING EQUIPMENT
SPRAY UNIT	POWER UNIT, ATOMIZED W/GLASS 6 OZ CONTAINER	PRECISION VALVE CORP. P.O. BOX 309 YONKERS, NY 10702	USED TO APPLY SMALL AMOUNTS OF LIQUID PRIMER, ADHESIVE, OR RESINS
SURFACE BLEEDER, SURFACE BREATHER, AND INSULATION	BMS 9-3, TYPE D	SEE 51-20-03, FIG. 2	
TEMPERATURE CONTROLLER CONSOLE, PORTABLE SELF-CONTAINED [A] [B]		ATACS PRODUCTS, INC. 14040 INTERURBAN AVE. S. TUKWILA, WA 98168 GMI 9 RUE BUFFAULT 75009 PARIS, FRANCE -OR- GMI/EMPTECH 5957 GLENDALE DRIVE CHILLIWACK, B.C., CANADA V2R 3A5	USE WITH HEAT BLANKETS, THERMOCOUPLES, AND VACUUM UNIT FOR APPLICATION AND RECORDING OF HEAT AND PRESSURE

Miscellaneous Equipment
Figure 1 (Sheet 4)

TOOL	MANUFACTURER'S DESIGNATION	MANUFACTURER	REMARKS
		HEATCON COMPOSITE SYSTEMS 600 ANDOVER PARK E. SEATTLE, WA 98188 JR TECHNOLOGY LTD. 81 NORTH END, MELDRETH ROYSTON, HERTS, ENGLAND SG86NU PYROMETRIC SERVICE CORP. 1312 S. 96TH ST. SEATTLE, WA 98108-5010 TAYCO ENGINEERING, INC. 10874 HOPE ST. P.O. BOX 6034 CYPRESS, CA 90630 WICHITECH INDUSTRIES, INC. OAKLAND CENTER 8990 RT. 108 COLUMBIA, MD 21045	
TRANSFORMER, PORTABLE [B]	VARIABLE CONTROL 115-VOLT, 60-CYCLE		USE WITH HEATING BLANKETS AS A POWER SUPPLY
VACUUM UNIT [B]	ANY UNIT COMPATIBLE WITH TEMPERATURE CONTROL CONSOLE		INCLUDES VACUUM PUMP AND TRANSDUCER
VACUUM PROBE, QUICK DISCONNECT	VACU-VALVE, #401 ROUND BASE, #401A RECTANGULAR BASE	AIRTECH INTERNATIONAL, INC. 5700 SKYLAB ROAD HUNTINGTON BEACH, CA 92647	USE FOR EVACUATION OF AIR INSIDE BAG FILM

NOTES

[A] HOT BOND CONSOLES MUST HAVE THE FOLLOWING FEATURES:

(1) CONTROL OF POWER INPUT TO HEAT BLANKETS

(2) PROVIDE FOR EVACUATION OF LAY-UP

(3) CONTROL VACUUM

(4) CONTINUOUSLY RECORD TEMPERATURE INPUT FROM AT LEAST 1 THERMOCOUPLE

(5) PROVIDE MANUAL MONITORING OF AT LEAST 3 THERMOCOUPLES

(6) SETTING OF CURE TIME

(7) AUTOMATIC SHUT-OFF AT END OF CURE TIME

[B] THE USE OF ELECTRICAL EQUIPMENT IS HAZARDOUS WHEN USED IN PROXIMITY OF FUEL AND OTHER VOLATILE MATERIALS. OBSERVE ALL SAFETY PRECAUTIONS

[C] 0.25 SHANK

[D] 0.50 SHANK

Miscellaneous Equipment
Figure 1 (Sheet 5)

TOOL	MANUFACTURER'S DESIGNATION	MANUFACTURER	REMARKS
ANGLES, 90° ALUMINUM	ASSORTED SIZES, SHOP STOCK	COMMERCIAL - ANY SOURCE	USE WITH CLAMP WEDGE BLOCKS OR REPAIRS AT EDGE OF ASSEMBLIES
BLADE, SAW	RAZOR 3/4 IN., #34-C	X-ACTO ONE COMMERCE SQUARE 2005 MARKET ST. PHILADELPHIA, PA 17103	FINAL SAWING OF EXTRUSIONS AND SKINS
BLADE HANDLE, SAW	X-ACTO #5	X-ACTO ONE COMMERCE SQUARE 2005 MARKET ST. PHILADELPHIA, PA 17103	HANDLE FOR THE #34-C RAZOR SAW BLADE
BLOCK, SANDING	METAL OR WOOD	COMMERCIAL - ANY SOURCE OR IN-HOUSE FABRICATION	USE WITH SANDING PAPER TO ACHIEVE A FLAT FINISH SURFACE
BOTTLES, LIQUID DISPENSING, POLYETHYLENE	SQUEEZE-TYPE, 16 OZ., #16057-120 OR EQUIV USE SPOUT CAP, 28 MM, #H-16657 OR EQUIV	V.W.R. SCIENTIFIC 355 TRECK DRIVE SEATTLE, WA 98188	DISPENSING CLEANING SOLVENTS AND LIQUIDS
BRUSH, ACID		COMMERCIAL - ANY SOURCE	
BRUSH, PAINT	1.0 INCH WIDE, SHORT BRISTLE	COMMERCIAL - ANY SOURCE	FOR APPLICATION OF SOLVENTS, PASTE, SOLVENTS, OR ADHESIVES
BURNISHING TOOL	METAL, ASSORTED SIZES, SPOON TYPE	COMMERCIAL - ANY SOURCE	USE FOR BURNISHING SCRATCHES
BURNISHING TOOL	0.187 POLYETHYLENE	COMMERCIAL - ANY SOURCE	USE FOR BURNISHING SCRATCHES
CLAMPS, C-TYPE	ASSORTED SIZES	COMMERCIAL - ANY SOURCE	USE FOR MECHANICAL CLAMPING TO APPLY PRESSURE TO A REPAIR, OR TO WEDGE BLOCKS (IF USED)
DIVIDERS, METAL-MARKING	CAPACITY, 8 INCHES	COMMERCIAL - ANY SOURCE	USE FOR MARKING CUTOUTS ON ALUMINUM OR TITANIUM SURFACES AND DETAIL FABRICATION
DRILLS, HI-SPEED STEEL	NUMBER OR LETTER DRILL SET, 90°/108° POINT ANGLE	COMMERCIAL - ANY SOURCE	FOR DRILLING ALUMINUM
DRILLS, COBALT	NUMBER OR LETTER DRILL SET, 135° POINT ANGLE	COMMERCIAL - ANY SOURCE	FOR DRILLING TITANIUM
DRILL STOP, SPRING-LOADED	WEDGELOCK DS-10 WEDGELOCK DS-20 WEDGELOCK DS-30 WEDGELOCK DS-40	MONOGRAM AEROSPACE FASTENERS 2343 SO. GARFIELD AVE. LOS ANGELES, CA 90040	FOR SETTING DRILL DEPTH
FILE, HAND, FLAT MILL	6-,8-,10-, OR 12-IN.	COMMERCIAL - ANY SOURCE	USE FOR DEBURRING AND SIZING DETAILS
FILE, HAND, ROUND (RAT-TAIL)	1/8-,1/4-,3/8-, OR 1/2-IN.	COMMERCIAL - ANY SOURCE	USE FOR DEBURRING AND FILING HOLES
FILE, HAND, ROTARY	1/2-,3/4-, OR 1-IN. DIA ROUND END	COMMERCIAL - ANY SOURCE	USE FOR REMOVING METAL AND HONEYCOMB CORE
FILE, HAND, FLAT VIXON	12- OR 14-IN.	COMMERCIAL - ANY SOURCE	USE FOR HEAVY ROUGH CUT IN METAL REMOVAL

Hand Tools
Figure 2 (Sheet 1)

TOOL	MANUFACTURER'S DESIGNATION	MANUFACTURER	REMARKS
FUNNELS, POLY-ETHYLENE, 28 MM OPENING, SHORT STEM	3-IN. DIA # 3-2050-040 6-IN. DIA # 3-2050-084 6-IN. DIA # 3-0255-088	V.W.R. SCIENTIFIC 355 TRECK DRIVE SEATTLE, WA 98188 OR LOCAL SUPPLIER OF LABORATORY SUPPLIES	USE FOR DISPENSING CHEMICALS, SOLVENTS, OR ACIDS
HAMMER, MACHINISTS BALL PEEN	FED. GGG-H-86, TYPE II, CLASS 1, STYLE A, 8 OZ	COMMERCIAL - ANY SOURCE	HAND WORK
HAMMER, TAPPING, INSPECTION		IN-HOUSE FABRICATION	INSPECTION TOOL
KNIFE, RETRACTABLE BLADE	MECHANICAL, RAZOR BLADE	COMMERCIAL - ANY SOURCE	THIN CORE SLICING, ADHESIVE CUTTING, FILM CUTTING, TAPE CUTTING, MISC CUTTING OR TRIMMING
MICROMETERS, GAP-TYPE, CERTIFIED	0.0 TO 1.0 INCH, ADJUST-ABLE STEM	COMMERCIAL - ANY SOURCE	USE FOR THICKNESS MEASUREMENTS OF SHEET METAL AND FOR INSPEC-TION OPERATIONS
MICROMETERS, DEPTH, CERTIFIED	0.0 TO 2.0 INCHES	COMMERCIAL - ANY SOURCE	USE FOR MEASURING DEPTH OF HONEYCOMB CORE OR ASSEMBLY THICKNESS
NEEDLE, HYPODERMIC	18 GAGE, 2 INCHES LONG, #BD-1098 BECTON/DICKSON	V.W.R. SCIENTIFIC 355 TRECK DRIVE SEATTLE, WA 98188	CUT STEM TO LENGTH DESIRED. USE FOR RESIN INJECTIONS TO FILL VOIDS
PRESSURE PLATES	0.125 AND 0.250 ALUMINUM PLATE, VARIOUS SIZES 6061-T4 ALUM ALLOY PLATE OR EQUIV	COMMERCIAL - ANY SOURCE	USE FOR PRESSURE APPLICATION DURING THE CURE CYCLE
PHENOLIC SHEET	0.125 TEMPLATE STOCK MIL-P-15035 OR EQUIV	COMMERCIAL - ANY SOURCE	USE FOR ROUTER TEMPLATES
PIPET, STRAIGHT TIP MEDICINE DROPPER	#52950-002 OR EQUIV	V.W.R. SCIENTIFIC 355 TRECK DRIVE SEATTLE, WA 98188	USE FOR INJECTION OF LIQUID ADHESIVE
PLASTIC SHEET, ACRYLIC	0.187 DRILL TEMPLATE STOCK OR EQUIV MIL-P-5425A	COMMERCIAL - ANY SOURCE	USE FOR DRILL TEMPLATES
PLASTIC SHEET, MYLAR	0.0075 IN. WIDE, 650-FT ROLL	DUPONT	USE FOR MAKING OUTLINE TEM-PLATES FOR HONEYCOMB CORE DETAILS
PLASTIC APPLICATOR	P.A-1 PLASTIC	3M	USE FOR SPREADING, SCREEDING, AND SMOOTHING OF ADHESIVES, RESINS, OR COMPOUNDS
PLATE, MIXING	0.125 OR 0.250 ALUMINUM PLATE	COMMERCIAL-ANY SOURCE, IN-HOUSE SHOP STOCK	MYLAR SHEET CAN BE USED AS A SUBSTITUTE FOR MIXING COM-POUNDS, RESINS, OR ADHESIVE PASTES
PLIERS, ANGLE NOSE, MULTIPLE HOLE	FED. GGG-P-00471, TYPE II, STYLE B, CLASS 1	COMMERCIAL-ANY SOURCE	MANUAL USE
PLIERS, DUCKBILL, 6-INCH	FED. GGG-P-471	COMMERCIAL-ANY SOURCE	MANUAL USE

Hand Tools
Figure 2 (Sheet 2)

TOOL	MANUFACTURER'S DESIGNATION	MANUFACTURER	REMARKS
PLIERS, NEEDLE NOSE STRAIGHT	FED. GGG-P-471	COMMERCIAL-ANY SOURCE	MANUAL USE
PLIERS, STRAIGHT NOSE SLIP-JOINT W/CUTTER	FED. GGG-P-471	COMMERCIAL-ANY SOURCE	MANUAL USE
PLYWOOD, INDOOR	0.250 TEMPLATE STOCK OR EQUIV	COMMERCIAL-ANY SOURCE	USE FOR ROUTER TEMPLATES
ROD, STIRRING	0.125 THRU 0.375-IN. DIA STEEL, GLASS, OR POLY-ETHYLENE	COMMERCIAL-ANY SOURCE	USE FOR MIXING OR STIRRING LIQUIDS AND COMPOUNDS
ROLLER	WOOD OR HARD RUBBER, 6 INCHES LONG, 2-IN. DIA	COMMERCIAL-ANY SOURCE	ROLL OUT COMPOUNDS, LIQUID ADHESIVES, OR TRAPPED AIR UNDER FILMS OR CLOTH
ROUTER ATTACHMENT	MODEL QRC-3C OR QRC-3D COLLET, 9003 NOSE, 9013, 9022 BEARING, 9015 RET. RING, 9016; #881390 COMPLETE, USE WITH MODEL 11GLF-230/250 ROUTER MOTORS OR EQUIVALENT	MC MASTER-CARR P.O. BOX 740100 ATLANTA, GA 30374-0100 WWW.MCMASTER.COM COOPER POWER TOOLS 2000 SO. STA. CRUZ ST. ANAHEIM, CA 92805	HAND-ROUTING OF DAMAGED MATERIAL WITH ROUTER BIT GUIDE THAT INCLUDES SET-BACK DIMENSIONAL
ROUTER BUSHING	#SP-310-31J OR EQUIVALENT	MC MASTER-CARR P.O. BOX 740100 ATLANTA, GA 30374-0100 WWW.MCMASTER.COM	USE WITH QRC-3C AND -3D ROUTER MOTORS
ROUTER, MOTOR	PNEUMATIC, HI-SPEED, 20,000 RPM, QRC-3C OR 3D OR EQUIVALENT	MC MASTER-CARR P.O. BOX 740100 ATLANTA, GA 30374-0100 WWW.MCMASTER.COM COOPER POWER TOOLS 2000 SO. STA. CRUZ ST. ANAHEIM, CA 92805	USE FOR DAMAGE REMOVAL; SEE "ROUTER ATTACHMENT" FOR QRC ROUTERS
	PNEUMATIC, HI-SPEED, MODEL 11GLF-230 RPM 25,000, WITH ACCESSORIES OR EQUIVALENT	MC MASTER-CARR P.O. BOX 740100 ATLANTA, GA 30374-0100 WWW.MCMASTER.COM COOPER POWER TOOLS 2000 SO. STA. CRUZ ST. ANAHEIM, CA 92805	USE #881390 ROUTER ATTACHMENT INCLUDES SETBACK BUSHING
ROUTER, BITS	1/4-IN. DIA, 2-FLUTE LH SPIRAL, HI-SPEED STEEL FOR ALUMINUM; 1/4-IN. DIA, 3-FLUTE LH SPIRAL, CARBIDE FOR TITANIUM OR EQUIVALENT	COMMERCIAL-ANY SOURCE	USE WITH ANY ROUTER MOTOR

Hand Tools
Figure 2 (Sheet 3)

TOOL	MANUFACTURER'S DESIGNATION	MANUFACTURER	REMARKS
SAFETY FACE SHIELD	TRU-SAFE #119-1 OR SAFELINE #6799 (10 BY 18-1/4) OR EQUIV	COMMERCIAL - ANY SOURCE	FOR FACE AND EYE PROTECTION
SAFETY FACE SHIELD HOLDER	RICE HEAD SHIELD #707 OR EQUIV	COMMERCIAL - ANY SOURCE	HOLDS REPLACEABLE FACE SHIELD
SAFETY GLASSES	5944D SMOKE CLEAR LENSES	H.L. BOUTON CO. INC. BUZZARD BAY, MA 02532	FOR EYE PROTECTION
SANDER, POWER [A]	BELT, FLEXIBLE DISC, ORBITAL, OR ROTATING PAD TYPES	COMMERCIAL - ANY SOURCE	USE FOR TAPER SANDING REPAIR AREA, PAINT REMOVAL, SMOOTHING CURED REPAIRS
SAW, ARBOR	1/4-IN. DIA EXPANDABLE END, ALLEN SCREW LOCK	IN-HOUSE FABRICATION (SEE FIG. 8-12)	HOLDING ARBOR FOR SLOTTING SAW BLADES
SAW, BLADE	HACKSAW, 12-INCH, ASSORTED TEETH, 18,24,28 AND 32 PER INCH	COMMERCIAL - ANY SOURCE	USE FOR REMOVAL OR DAMAGED MATERIAL
SAW BLADE HOLDER		COMMERCIAL - ANY SOURCE	HOLDER FOR HACKSAW BLADES
SAW, CIRCULAR WITH ADAPTER AND BLADE	CP-3017-OKS-1000-3 OR EQUIVALENT	CHICAGO PNEUMATIC 1800 OVERVIEW DR. ROCKHILL, SC 29730	USE TO SAW SLOTS IN PANEL
SAW, CUTTER	5/8 INCH	COMMERCIAL - ANY SOURCE	CUTTER FOR ARBOR SAW
SAW, HOLE	1/2-,1-,2-,3-, AND 4-IN.	COMMERCIAL - ANY SOURCE	USE FOR REMOVAL OF DAMAGED MATERIAL
SAW, RECIPROCATING WITH BLADES	FOR ALUMINUM OR TI SKINS, CP-3017-FO OR EQUIVALENT	CHICAGO PNEUMATIC 1800 OVERVIEW DR. ROCKHILL, SC 29730	USE TO REMOVE DAMAGED MATERIAL-FROM BONDED PANELS
SAW, SLOTTING	1/4-IN. DIA ARBOR HOLE, 2-IN. BLADE	COMMERCIAL - ANY SOURCE	USE FOR REMOVAL OF DAMAGED MATERIAL
SCALE, FLEXIBLE	12-IN. #338R TEMPERED OR EQUIV	COMMERCIAL - ANY SOURCE	DETERMINING SIZES
SCREEN WIRE	#16 MESH 0.018 DIA WIRE CRS TYPE 304	PACIFIC NORTHWEST WIRE 18623 89TH PLACE S. KENT, WA 98032	USE FOR PHOSPHORIC ACID ANODIZING
SCRIBE	REVERSIBLE POINT	COMMERCIAL - ANY SOURCE	MAKING DETAIL LAYOUT OUTLINES ON MYLAR OR TEMPLATE STOCK
SHEARS, METAL CUTTING	10-IN. FED. GGG-5-291 TYPE II, CLASS 1, STYLE B	COMMERCIAL - ANY SOURCE	CUTTING METAL DETAILS, PREFIT TRIMMING OF DETAILS
SPATULA, MIXING	WOOD OR METAL	COMMERCIAL - ANY SOURCE	MIXING COMPOUNDS, SLICING LIGHT DENSITY CORE, SPREADING COMPOUNDS AND ADHESIVES
SQUARE, COMBINATION	12-IN. GROOVED BLADE, STYLE "BP"	COMMERCIAL - ANY SOURCE	MARKING DETAILS
SQUEEGE, FLAT	SYNTHETIC RUBBER, PHENOLIC LAMINATE, OR PLEXIGLASS	COMMERCIAL - ANY SOURCE	USE FOR SMOOTHING RESINS OR COMPOUNDS

Hand Tools
Figure 2 (Sheet 4)

TOOL	MANUFACTURER'S DESIGNATION	MANUFACTURER	REMARKS
TONGUE DEPRESSORS	WOOD	COMMERCIAL - ANY SOURCE	MIXING AND SPREADING COMPOUNDS AND ADHESIVES

NOTE

[A] THE USE OF ELECTRICAL EQUIPMENT IS HAZARDOUS WHEN USED IN PROXIMITY OF FUEL AND OTHER VOLATILE MATERIALS. OBSERVE ALL SAFETY PRECAUTIONS

Hand Tools
Figure 2 (Sheet 5)

GENERAL - ORDER DATA FOR COMPOSITE REPAIR MATERIALS

1. Applicability

   A. This general section contains the necessary data to order composite repair materials from The Boeing Company.

2. General

   A. This section gives a list of materials that are used to make the composite repairs given in this manual.

   B. The data given here includes the order numbers and the units of measure for materials that are available in small quantities through Boeing Spares. Refer to Paragraph 3 for the order information. If you need a material that is not included in this section, you can still order it through Boeing Spares. It is possible that Boeing Spares will have to purchase the material from a vendor with a minimum buy limit. Also, the vendor source information for nonmetallic materials is given in SRM 51-20-3.

   C. The shelf life of some materials is limited and special procedures for the storage and shipment of some materials is necessary. You can get the applicable data from the supply source.

   D. If you need the materials immediately, call the Boeing Airplane-On-Ground (AOG) Spares office at 1-206-544-9000. For other orders, call the Boeing Regional Spares Manager who works with your airline or repair facility.

3. Order Information

   A. Table I gives the necessary order information for the composite repair materials.

   B. Order the repair materials by their order number as given in Table I.

   C. Include the data that follows in the order noteline:

      -SRM 51-20-07.

   D. Order all of the preimpregnated materials as AOG or Critical.

COMPOSITE REPAIR MATERIALS			
MATERIAL	ORDER NUMBER	UNIT OF MEASURE	REMARKS
BMS 5-28, TYPE 6 (POTTING COMPOUND)	BMS5-28TY6	1 QUART KIT	
	BMS5-28TYPE6	1 PINT KIT	
	5522360051	1 GALLON EACH	
BMS 5-28, TYPE 7, CLASS 1 (POTTING COMPOUND)	BMS5-28TY7CL1	1 QUART KIT	
	5522360052	1 GALLON EACH	
BMS 5-28, TYPE 7, CLASS 2 (POTTING COMPOUND)	BMS5-28TY7CL2	1 QUART KIT	
	5522360053	1 GALLON EACH	
BMS 5-28, TYPE 17 (POTTING COMPOUND)	BMS5-28TY17	1 QUART KIT	
	BMS5-28TYPE17	1 PINT KIT	
	5522360050	6 POUND KIT	
BMS 5-90, TYPE III, CLASS 250, GRADE 50 (FOAMING FILM ADHESIVE)	BMS5-90TY3CL250GR50	2 SQUARE FOOT SHEET	SHIP AND STORE FROZEN
BMS 5-90, TYPE III, CLASS 350, GRADE 50 (FOAMING FILM ADHESIVE)	BMS5-90TY3CL350GR50	10 INCH BY 24 INCH SHEET	SHIP AND STORE FROZEN
BMS 5-90, TYPE IV, CLASS 350, GRADE 50 (FOAMING EXTRUDABLE ADHESIVE)	BMS5-90TY4CL350GR50	6 OUNCE CARTRIDGE	SHIP AND STORE FROZEN
BMS 5-92, TYPE I - EC2216 A/B (ADHESIVE)	BMS5-92TY1	1 QUART KIT	
	BMS5-92TYPE1	6 OUNCES EACH	
BMS 5-101, TYPE II, GRADE 10 (ADHESIVE)	BMS5-101TY2GR10	LENGTH BY THE YARD (36 INCHES WIDE)	SHIP AND STORE FROZEN
BMS 5-129, TYPE 2, CLASS IA, GRADE 10 (ADHESIVE)	BMS5-129TY2CL1AGR10	LENGTH BY THE YARD (36 INCHES WIDE)	SHIP AND STORE FROZEN

TABLE I

Material Order Data
Figure 1 (Sheet 1)

COMPOSITE REPAIR MATERIALS			
MATERIAL	ORDER NUMBER	UNIT OF MEASURE	REMARKS
BMS 5-129, TYPE 4, GRADE 5 (ADHESIVE)	BMS5-129TY4GR5	LENGTH BY THE YARD (36 INCHES WIDE)	SHIP AND STORE FROZEN
BMS 5-141 (ADHESIVE)	BMS5-141	1 QUART KIT	
BMS 5-154, GRADE 05 (ADHESIVE)	BMS5-154TY2CL2GR5	LENGTH AND WIDTH BY THE FOOT (MAXIMUM WIDTH OF 3 FEET)	SHIP AND STORE FROZEN
BMS 8-79, CLASS III, TYPE 120 (GLASS FIBER REINFORCED PLASTIC (GFRP) FABRIC)	BMS8-79CL3GRATY220	LENGTH BY THE YARD (38 INCHES WIDE)	SHIP AND STORE FROZEN
BMS 8-79, CLASS III, TYPE 7781 (GFRP FABRIC)	BMS8-79CL3GRATY7781	LENGTH BY THE YARD (38 INCHES WIDE)	SHIP AND STORE FROZEN
BMS 8-139, CLASS I, STYLE 120 (GFRP FABRIC)	BMS8-139TY120CL1	LENGTH BY THE YARD (38 INCHES WIDE)	SHIP AND STORE FROZEN
BMS 8-139, CLASS I, STYLE 7781 (GFRP FABRIC)	BMS8-139CL1TY7781	LENGTH BY THE YARD (38 INCHES WIDE)	SHIP AND STORE FROZEN
BMS 8-145, TYPE I (ADHESIVE FILM)	BMS8-145TYPE1	LENGTH BY THE YARD (40 INCHES WIDE)	SHIP AND STORE FROZEN
BMS 8-168, CLASS 1, TYPE II, GRADE 145 (CARBON FIBER REINFORCED PLASTIC (CFRP) TAPE)	BMS8-168T2C1GR145	LENGTH BY THE YARD (12 INCHES WIDE)	SHIP AND STORE FROZEN
BMS 8-168, CLASS 1, TYPE II, GRADE 190 (CFRP TAPE)	BMS8-168T2C1GR190	LENGTH BY THE YARD (12 INCHES WIDE)	SHIP AND STORE FROZEN

TABLE I

Material Order Data
Figure 1 (Sheet 2)

COMPOSITE REPAIR MATERIALS			
MATERIAL	ORDER NUMBER	UNIT OF MEASURE	REMARKS
BMS 8-168, CLASS 2, TYPE II, STYLE 3K-70-PW (CFRP FABRIC)	BMS8-168T2C2ST3K70PW	LENGTH BY THE YARD (42 INCHES WIDE)	SHIP AND STORE FROZEN
BMS 8-201, TYPE I (ADHESIVE)	BMS8-201TY1	1 QUART KIT	
	BMS8-201TY1X1GL	1 GALLON EACH	
BMS 8-201, TYPE II (ADHESIVE)	BMS8-201TY2	1 QUART KIT	
	5522360072	1 GALLON EACH	
BMS 8-212, TYPE II, CLASS 1, GRADE 95 (CFRP TAPE)	BMS8-212TY2CL1GR95	LENGTH BY THE YARD (12 INCHES WIDE)	SHIP AND STORE FROZEN
BMS 8-212, TYPE II, CLASS 1, GRADE 190 (CFRP TAPE)	BMS8-212TY2CL1GR190	LENGTH BY THE YARD (12 INCHES WIDE)	SHIP AND STORE FROZEN
BMS 8-212, TYPE III, CLASS 1, GRADE 145 (CFRP TAPE)	BMS8-212TY3CL1GR145	LENGTH BY THE YARD (12 INCHES WIDE)	SHIP AND STORE FROZEN
BMS 8-212, TYPE III, CLASS 1, GRADE 190 (CFRP TAPE)	BMS8-212TY3CL1GR190	LENGTH BY THE YARD (12 INCHES WIDE)	SHIP AND STORE FROZEN
BMS 8-212, TYPE II, CLASS 2, STYLE 3K-135-8H (CFRP FABRIC)	BMS8-212T2C2-3K1358H	LENGTH BY THE YARD (42 INCHES WIDE)	SHIP AND STORE FROZEN
BMS 8-212, TYPE IV, CLASS 2, STYLE 3K-70-PW (CFRP FABRIC)	BMS8-212T4C2ST3K70PW	LENGTH BY THE YARD (42 INCHES WIDE)	SHIP AND STORE FROZEN
BMS 8-256, TYPE II, CLASS 1, GRADE 190 (CFRP TAPE)	BMS8-256TY2CL1GR190 (THIS MATERIAL IS NOT ALWAYS AVAILABLE AT BOEING)	LENGTH BY THE FOOT (12 INCHES WIDE)	SHIP AND STORE FROZEN
BMS 8-256, TYPE IV, CLASS 2, STYLE 3K-70-PW (CFRP FABRIC)	BMS8-256T4C2ST3K70PW	LENGTH BY THE YARD (42 INCHES WIDE)	SHIP AND STORE FROZEN

TABLE I

Material Order Data
Figure 1 (Sheet 3)

COMPOSITE REPAIR MATERIALS			
MATERIAL	ORDER NUMBER	UNIT OF MEASURE	REMARKS
BMS 8-276, CLASS 1, TYPE 35, FORM 1 (TOUGHENED-EPOXY CFRP TAPE)	BMS8-276C1FR1T35X12	LENGTH BY THE FOOT (12 INCHES WIDE)	SHIP AND STORE FROZEN
BMS 8-297, TYPE 4, CLASS 2, STYLE 3K-70-PW (CFRP FABRIC)	BMS8-297T4C2S3K70PW	LENGTH BY THE YARD (42 INCHES WIDE)	SHIP AND STORE FROZEN
BMS 8-301, CLASS 1 (ADHESIVE)	BMS8-301CL1	1 QUART EACH	SHIP AND STORE FROZEN
BMS 8-301, CLASS 2 (ADHESIVE)	BMS8-301CL2	1 QUART EACH	SHIP AND STORE FROZEN
BMS 8-339, CLASS 1 (PITCH BASED CFRP HONEYCOMB CORE)	BMS8-339CL1 (REFER TO FIGURE 1 FOR THE TYPES OF DIMENSIONS THAT ARE NEEDED WHEN YOU ORDER THE CORE)	LENGTH AND WIDTH BY THE FOOT. MANY THICKNESSES ARE AVAILABLE.	
BMS 8-342, CLASS 2, TYPE 3, GRADE 15 (POLYACRYLONITRILE (PAN) BASED CFRP HONEYCOMB CORE)	BMS8-342CL2TY3GR15 (REFER TO FIGURE 1 FOR THE TYPES OF DIMENSIONS THAT ARE NEEDED WHEN YOU ORDER THE CORE)	LENGTH AND WIDTH BY THE FOOT. MANY THICKNESSES ARE AVAILABLE.	
BMS 9-3, TYPE D, CLASS 7, STYLE 120 (GLASS FIBER FABRIC)	BMS9-3TYDCL7	125 YARDS MINIMUM (38 INCHES WIDE)	
BMS 9-3, TYPE H-2, CLASS 7, STYLE 181 (GLASS FIBER FABRIC)	BMS9-3TYHCL7STYLE181	125 YARDS MINIMUM (5.5 INCHES WIDE)	
BMS 9-8, TYPE I, CLASS 2, STYLE 3K-70-P (CARBON FIBER FABRIC)	BMS9-8T1C2S3K70P	LENGTH BY THE YARD (42 INCHES WIDE)	
CAB-O-SIL (FILLER)	CABOSILGRADEM5	10 POUNDS MINIMUM	
EPIBOND 156 A/B (SURFACER)	EPIBOND156AB	1 QUART KIT	

TABLE I

Material Order Data
Figure 1 (Sheet 4)

COMPOSITE REPAIR MATERIALS			
MATERIAL	ORDER NUMBER	UNIT OF MEASURE	REMARKS
MILLED GLASS FIBERS (FILLER)	MILLEDGLASSFIBER	BY THE POUND (1/16 INCH LONG MILLED FIBERS)	
PHENOLIC MICROBALLOONS (FILLER)	BJO-0930	1 BAG EACH (17 POUND BAG)	

TABLE I

Material Order Data
Figure 1 (Sheet 5)

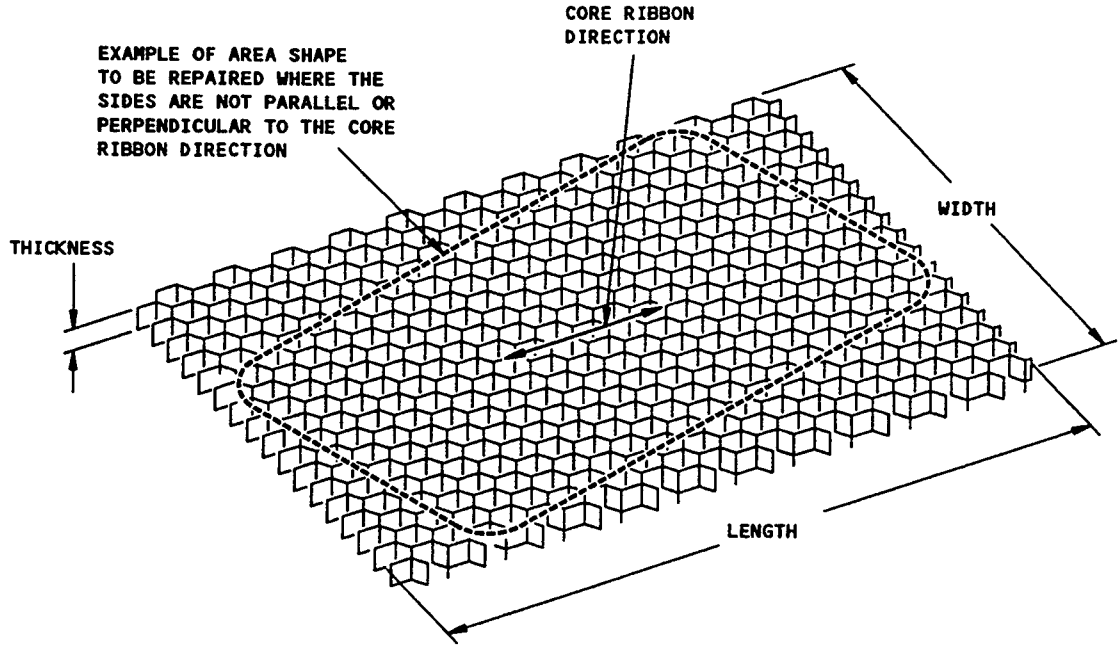

NOTE: WHEN YOU ORDER THE CORE, GIVE:

- THE LENGTH THAT IS NEEDED IN THE CORE RIBBON DIRECTION
- THE WIDTH THAT IS NEEDED PERPENDICULAR TO THE CORE RIBBON DIRECTION
- THE THICKNESS THAT IS NEEDED.

Necessary Dimensions for Ordering the Core
Figure 2

FASTENERS - GENERAL

1. Applicability

   A. This section gives general information about Boeing approved fasteners used on this airplane. It also gives information about inspecting for loose fasteners.

2. General

   A. Fastener Codes and Symbols

      (1) The Boeing Drawing system for the airplane model in this Structural Repair Manual uses a fastener symbol system as specified in NAS523 and Boeing Design Detail Standard BACD2074. Figure 1 shows some examples of fastener symbols used in Boeing engineer drawings.

      (2) Boeing approved fasteners and fastener/mating part combinations have specific fastener codes. Fastener codes are not used in this manual, but are used on the Boeing engineer drawings. Fastener codes are cross referenced to the fastener part numbers on the drawings and in Boeing Design Detail Standard BACD2074.

   B. Suppliers of Boeing approved fasteners.

      (1) Suppliers for Boeing approved fasteners can be found in the Qualified Products List (QPL) of each Boeing Fastener Specification.

   C. Loose Fasteners

      (1) Refer to SRM 51-10-10 if you find loose or missing fasteners. Loose fasteners can be identified by the following situations:

         (a) The fastener moves in relation to the material that it holds.

         (b) Tipped fastener heads can show looseness or slippage of the material. The edges of a rivet head that are rolled upward also show looseness.

         (c) A black or dark gray colored stain adjacent to or around the fastener head can show a loose rivet. A streak of dirt or oil aft of a loose rivet is usually apparent.

         (d) Fasteners can be loose if the paint around the fastener head is cracked.

      (2) You can also examine the structure for loose fasteners as shown in Fig. 2.

BOEING PROPRIETARY - Copyright © - Unpublished Work - See title page for details.

3. References

A. SRM 51-30-2 Fastener Installation and Removal

B. SRM 51-30-3 Fastener Substitution

C. SRM 51-30-4 Torque Values

D. SRM 51-30-5 Fastener Hole Sizes

E. SRM 51-30-6 Fastener Edge Margins

F. SRM 51-30-7 Strength of Fasteners

G. SRM 51-30-8 Countersinking

H. SRM 51-30-9 Cold Working of Holes for Fatigue Improvement

4. Fastener Types

A. This section gives some general data about the usual types of mechanical fasteners found on this airplane.

B. Fasteners can be grouped as either permanent or removable as follows:

(1) Permanent fasteners are used in the assembly of structure that is not disassembled during usual service. Most permanent fasteners become unserviceable after they are removed and must be discarded. Some hex-drive bolts continue to be serviceable after they are removed. Inspect removed hex-drive bolts to see if they continue to be serviceable as specified in SRM 51-30-2. These types of fasteners are permanent:

- solid rivets
- lockbolts
- hex-drive bolts
- radius lead-in bolts
- blind rivets
- blind bolts
- sandwich panel inserts

BOEING PROPRIETARY - Copyright © - Unpublished Work - See title page for details.

(2) Removable fasteners are used in the assembly of structure that can or must be disassembled during usual service. These types of fasteners are removable fasteners:

- bolt
- screws
- set-screws
- nuts
- nutplates
- threaded inserts
- washers
- pins

C. Solid Rivets

(1) Most of the fasteners used on this airplane are solid-shank rivets made from specified aluminum alloys. Solid rivets are permanent fasteners that are used where rivets must have sufficient shear strength and where complete hole-filling is important.

(2) You can use softer alloy rivets as alternative fasteners for the usual rivets in some locations. Although softer alloy rivets are permitted in some locations, a larger number of fasteners or a larger diameter of fastener can be necessary to get the same structural strength. Make sure the material edge margin and fastener spacing are correct when you use softer alloy rivets as alternative fasteners. Refer to SRM 51-30-3 for data about approved fastener substitutions and to see if there are limitations on their use.

D. Lockbolts and Hex-Drive Bolts

(1) Lockbolts are permanent fasteners that have a collar that is swaged onto the serrated end of the bolt. Lockbolts have a higher shear strength and a higher clamp-up force than solid rivets.

(2) Hex-drive bolts are almost the same as lockbolts but use a threaded shank together with a threaded collar or nut. Some special hex-drive bolts use a fluted, threaded shank together with swage-locking collar. You can use hex-drive bolts as alternative fasteners to lockbolts if you do not have access to the lockbolt installation tools. Refer to SRM 51-30-3 for approved alternatives.

BOEING PROPRIETARY - Copyright © - Unpublished Work - See title page for details.

E. Radius Lead-In Bolts

(1) You can use radius lead-in bolts in highly-stressed aluminum alloy structure where durability (resistance to fatigue) is necessary. Radius lead-in bolts are different from the usual fasteners because they:

(a) Have a shank with a radius lead-in area under the head.

(b) Have a 0.006-inch diameter oversize shank.

(c) Are driven into high interference-fit holes during installation.

F. Blind Rivets and Blind Bolts

CAUTION: DO NOT USE BLIND FASTENERS AT THESE LOCATIONS:

- WHERE THE HEADS CAN BE PRIED
- FLUID-TIGHT JOINTS
- WING ATTACHMENT FITTINGS
- PYLON ATTACH FITTINGS
- LANDING GEAR FITTINGS
- CONTROL SURFACE HINGE BRACKETS
- CONTROL SURFACE ATTACHMENT FITTINGS
- FIXED TAIL SURFACE ATTACHMENT FITTINGS
- OTHER TENSION OR HIGHLY STRESSED LOCATIONS

BLIND FASTENERS CAN FAIL IF YOU USE THEM IN THESE LOCATIONS.

(1) Blind fasteners are fasteners that you can install when you have access to only one side of the structure. In some locations, you can use blind rivets where access is not available to make the upset head of a solid rivet. Blind bolts have larger manufactured heads and higher tension and shear strengths than the usual blind rivets.

NOTE: Blind fasteners are permanent only when they replace the initial blind fasteners specified in the drawing for the component or if specified as permanent in an FAA approved repair. Although blind fasteners are permitted in some conditions as alternatives to solid fasteners, a larger number of fasteners or a larger diameter of fastener can be necessary to get the same structural strength. Make sure that the material edge margin and fastener spacing are sufficient when you use blind fasteners as alternative fasteners. Refer to SRM 51-30-03 for approved alternatives.

In some repairs there will be specified time-limits for replacement with permanent fasteners, or inspections, or both.

BOEING PROPRIETARY - Copyright © - Unpublished Work - See title page for details.

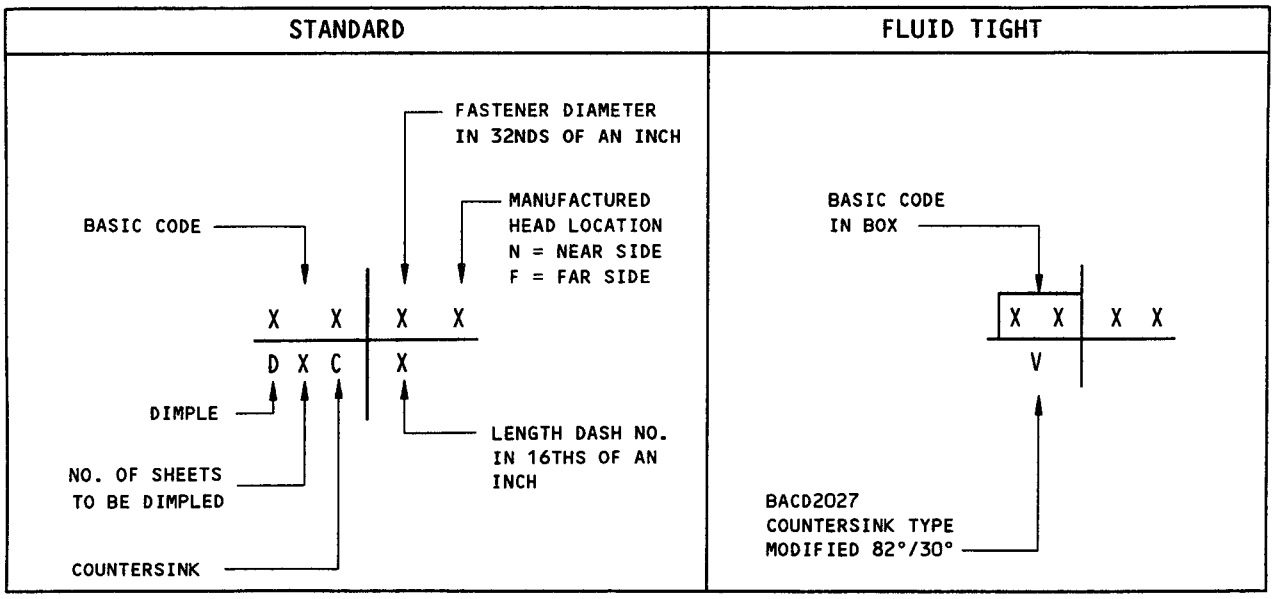

YNE | 6N
C |
BACR15FV6KE RIVET
120° MODIFIED SHEAR HEAD
3/16 DIAMETER
7050-T73
COUNTERSINK, NEAR SIDE

RL | 5
BACR15FV6KE RIVET
5/32 DIAMETER
2017-T4

XFV | 8
DC |
BACB30GY LOCKBOLT
100° SHEAR HEAD
1/4 DIAMETER
STEEL, WITH BACC30K COLLAR
DIMPLED SKIN
COUNTERSINK STRUCTURE

XCZ | 8
BACB30FM HEX-DRIVE BOLT
1/4 DIAMETER
STEEL, WITH BACC30M COLLAR

YKJ | 4N
C | 12
BACB30PT4K12L BOLT
70° RADIUS LEAD-IN HEAD
EXTENDED THREAD LENGTH
1/8 DIAMETER
3/4 GRIP LENGTH
6AL-4V TITANIUM
WITH BACN10WM ALUMINUM COATED NUT
COUNTERSINK, NEAR SIDE

EXAMPLES

Fastener Symbols
Figure 1

BOEING PROPRIETARY - Copyright © - Unpublished Work - See title page for details.

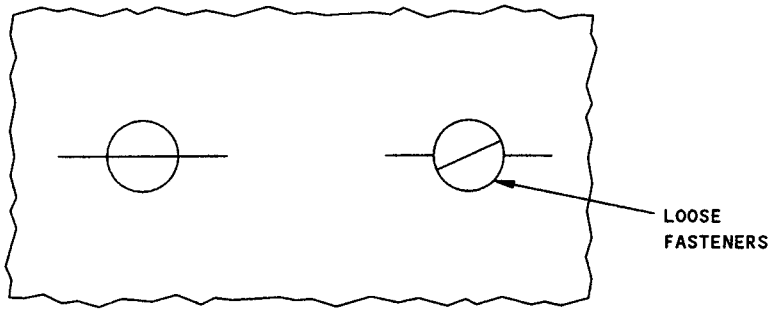

MARK A RED LINE ACROSS THE FASTENER HEAD AND THE ADJACENT MATERIAL. CHECK THE LINE AT THE NEXT INSPECTION. ANY LOOSENING OF THE FASTENER WILL BREAK THE LINE AS INDICATED.

Red Lining of Fasteners
Figure 2

BOEING PROPRIETARY - Copyright © - Unpublished Work - See title page for details.

RIVET IDENTIFICATION		UNIVERSAL	MODIFIED UNIVERSAL	100° CSK	100° SHEAR HEAD	82° CSK	120° CSK/CB
MATERIAL	MARKS	STANDARD RIVET NO.					
		BACR15BB	BACR15FT	BACR15BA	BACR15CE	BACR15FH	BACR15FV
2117(AD)	DIMPLED						
2017(D)	RAISED DOT EXCEPT [*]				* NO MARKING		
2024(DD)	RAISED DOUBLE DASH						
5056(B)	RAISED CROSS						
1100(A)	PLAIN						
7050(KE)	RAISED CIRCLE EXCEPT [*]						* INDENTED CIRCLE
MONEL(M) NICKEL-COPPER	PLAIN						

Identification Marks on Boeing Standard Rivets
Figure 3

BOEING PROPRIETARY - Copyright © - Unpublished Work - See title page for details.

FASTENER INSTALLATION AND REMOVAL

1. Applicability

   A. This section gives procedures for the removal and installation of structural fasteners in metallic and non-metallic structure.

2. General

   A. Some of the information in this subject can be found in Boeing Process Specifications BAC5004-1, BAC5004-2, BAC5004-3, BAC5009, BAC5047, BAC5054 and BAC5060.

   B. Hole Finder

      (1) You can use a hole finder to find the position of the initial fastener holes. Use a hole finder if the position of the hole is blocked by the repair parts, or if access is a problem.

      (2) Refer to Fig. 1 for an example of this tool. Use a tool with a rivet peg that has the same diameter as the applicable hole.

   CAUTION: USE SUFFICIENT PRECAUTIONS TO MAKE SURE THAT SYSTEM COMPONENTS, AIRPLANE ELECTRICAL WIRES AND STRUCTURES, ARE NOT DAMAGED BY DRILLS, METAL SHAVINGS AND OTHER CONTAMINATION WHILE YOU DO WORK. METAL SHAVINGS OR CONTAMINATION LEFT IN THE AIRPLANE CAN TOUCH WIRE BUNDLES AND CAUSE CHAFING DAMAGE TO ELECTRICAL WIRES. CHAFFED WIRES CAN CAUSE ARCING DAMAGE.

   C. Refer to SRM 51-20-01 for the procedure to drill in metal structures.

   D. Refer to SRM 51-30-05 for hole size dimensions and hole quality specifications.

   E. When you install flush head fasteners, refer to Fig. 2 for fastener flushness specifications. Refer to SRM 51-30-08 for countersinking and counterbore procedures.

   F. Refer to SRM 51-30-09 if it is necessary to cold work fastener holes.

3. References

   A. AMM 20-30-92/201, Final Cleaning Prior to General Sealing (Series 92)

   B. SOPM 20-30-92, Final Cleaning Prior to General Sealing (Series 92)

   C. SRM 51-70-00 Aerodynamic Smoothness Requirements

   D. SRM 51-10-02 Protective Treatment of Metallic and Graphite Materials

   E. SRM 51-10-06, Repair Sealing

   F. SRM 51-20-01, Sheet Metal Materials

   G. SRM 51-30-04, Torque Values

BOEING PROPRIETARY - Copyright © - Unpublished Work - See title page for details.

H. SRM 51-30-5, Fastener Hole Sizes

I. SRM 51-30-6, Fastener Edge Margins

J. SRM 51-30-8, Countersinking

K. SRM 51-30-9, Cold Working of Holes for Fatigue Improvement

4. Solid Shank Rivets

A. General

(1) The solid shank rivets in general use an this airplane are made from 7050, 2017 or 2117 aluminum alloy. In some locations, rivets made from 5056 or 2024 aluminum alloy, or nickel-copper alloy are used.

(a) 2017, 2117, 5056, and 7050 aluminum alloy rivets and monel rivets may be stored and used at room temperature.

(b) Rivets made from 2024 aluminum alloy must be heat-treated and then stored at a temperature of -10°F (-23°C), or lower. After removal from cold storage the rivets must be completely driven within 15 minutes. These rivets must not be returned to cold storage once they have been removed.

(2) Machine-driven rivets are frequently used during the initial airplane assembly. Some machine-driven rivets have a formed head on each end of the rivet (slug rivet). Slug rivets can be installed with hand tools, but manufactured head rivets are usually installed as an alternative to slug rivets.

(3) Refer to SRM 51-10-6 for replacement of rivets in the integral fuel tank.

B. Installation of Solid Rivets

(1) Solid rivets can be installed with a rivet gun and bucking bar or an applicable squeeze riveting tool. Some rivets (for example, the BACR15FT rivet) are installed with tools that can be different than tools for most rivets. Make sure that you have the proper tools for each type of rivet that you install.

(a) Rivet guns and bucking bars must be large enough to drive the rivets quickly. Three to four seconds duration is best. Seven seconds is the maximum.

(b) Do not over-drive rivets as this can cause diagonal cracks. It is recommended that bucking bars be very smooth when you install all types of rivets. But, smooth bucking bars are very important when you drive 7050 and 2017 aluminum alloy rivets.

(c) Use heavy, slow speed rivet guns and heavier bucking bars for nickel-copper alloy rivets.

BOEING PROPRIETARY - Copyright © - Unpublished Work - See title page for details.

(2) Install 5056 rivets wet with sealant if the rivets are installed in aluminum structure. Install 5056 rivets dry if installed in magnesium structure. Install all other rivets dry, unless told to do differently in a specific repair procedure.

(3) Figure 3 shows the grip ranges, shank projection before driving, and the driven head sizes for solid shank rivets used in non-fluid-tight applications.

(4) Figure 4 shows the grip ranges and the driven head sizes for solid shank rivets used in fluid-tight applications.

NOTE: The driven head for fluid-tight universal rivets is always formed on the seal plane of the integral fuel tank.

C. Do the inspections that follow after you install the rivets

(1) Measure the button dimensions as shown in Fig. 3 or Fig. 4, as applicable.

(2) Inspect the heads and buttons for cracks as shown in Fig. 5.

(3) Inspect the gaps under the heads of installed rivets as shown in Fig. 6.

D. Rework of rivet holes.

(1) Rework is necessary when a rivet will be installed in a hole that was filled before by a rivet. Rework can also be necessary if a new hole does not comply with the quality specifications in SRM 51-30-5 or SRM 51-30-8. Reworked holes must comply with the same quality specifications as the initial hole.

(2) It is permitted to rework holes to 1/32 inch oversize.

E. Refer to Fig. 7 for the procedures to remove solid shank rivets.

BOEING PROPRIETARY - Copyright © - Unpublished Work - See title page for details.

5. Blind Rivets

A. General

(1) Blind rivets are intended for use where access is limited to one side of the work.

(2) Refer to SRM 51-30-1 for limitations on the use of blind rivets.

B. Installation

(1) Blind rivets are installed with special tools, usually supplied by the fastener manufacturer.

NOTE: Blind rivets are supplied with different spindle configurations, full serrations, and partial serrations. Rivets having different spindle configurations cannot be installed with the same pulling head of the tool.

(2) Check for correct installation as follows:

(a) The heads of protruding type must be seated so that a 0.002 inch thick shim cannot contact the rivet shank.

(b) The heads of flush type must be seated so that a 0.002 inch thick shim cannot be inserted between the head of the rivet and the countersink for more than 40X of the circumference of the head and does not contact the rivet shank.

(c) Check that stem and collar protrusions are within limits shown in Table I, Fig. 8.

C. Removal

(1) If the removal of blind rivets is necessary, refer to Fig. 9.

6. Blind Bolts

A. General

(1) MS21140 flush head, and MS21141 protruding head, blind bolts are approved for use on this airplane.

(2) Refer to SRM 51-30-1 for limitations on the use of blind bolts.

B. Installation

(1) Blind bolts are installed with special tools, usually supplied by the fastener manufacturer.

(2) Check for correct installation as follows:

(a) Check for correct seating of boltheads as shown in Fig. 8.

(b) Check that stem and collar protrusions are within limits shown in Fig. 8.

BOEING PROPRIETARY - Copyright © - Unpublished Work - See title page for details.

C. Removal

(1) Remove blind bolts using the steps shown in Fig. 10.

NOTE: Special removal kits are available from the fastener manufacturers.

7. Lockbolts and Hex-Drive Bolts

A. General

(1) The recommended fasteners in aluminum structure are aluminum coated titanium, aluminum coated A-286, or cadmium-plated A-286. Cadmium-plated alloy-steel fasteners are a structurally acceptable alternative. But, the cadmium plating is a sacrificial coating, and in a corrosive environment can come off of the fastener. This can cause the alloy-steel fastener to corrode. This can then cause streaks of rust and/or the start of corrosion on adjacent aluminum structure.

(2) Collars for lockbolts and hex-drive bolts come from the manufacturer with a layer of lubrication. Do not remove the lubrication and do not add more lubrication.

(3) Fasteners are installed wet with sealant.

NOTE: Refer to SRM 51-10-6 to install fasteners in the integral fuel tank and other procedures to apply sealant.

B. Use of Washers (Fig. 12)

NOTE: The total number of washers that can be used for fillet relief, grip length adjustment, or corrosion protection is two plus the permitted number of counterbore substitution washers (that can be used with Hex-drive bolts). Too many washers can cause unwanted eccentricity and can cause fasteners to become loose. But, if you cannot get a good grip length adjustment, have an engineer do an analysis. An engineer can make a decision to add another washer.

Washer material must be similar to the fastener and structure materials. Refer to SRM 51-10-02 for the classification of dissimilar materials. The correct washer material and part number numbers to use are given in Fig. 12.

(1) Fillet Relief Washers Under Protruding Head Fasteners.

(a) A head-to-shank relief is necessary for all types of lockbolts and hex-drive bolts. As an alternative to making a fillet relief in the structure, you can put a fillet relief washer under protruding head fasteners.

(b) One washer, maximum, can be used for fillet relief.

(c) Only use washers that have a side with a fillet relief or countersink.

(d) Put the fillet relief (or countersunk) side of the washer under the head of the fastener.

BOEING PROPRIETARY - Copyright © - Unpublished Work - See title page for details.

(2) Corrosion Protection and Grip Length Adjustment Washers

NOTE: The maximum number of these types of washer that can be used is two, with a maximum thickness of 1/16 inches (1.6 mm).

(a) Only use standard washers (no countersunk washers) unless the grip adjustment washer is put directly under a protruding head (then a fillet relief or countersunk washer is necessary).

(b) Install the washer(s) as follows:

1) You can put one or two washers between a standard collar (or nut) and the structure.

2) You can put one or two washers between a standard collar (or nut) and a self-aligning washer (BACW10CA).

3) You can put one grip adjustment washer under a fastener head when:

- both a self-aligning nut and a self-aligning washer are used (BACN10MT with a BACW10AU), or
- a self-sealing collar is used (BACC30BP), or
- a self-sealing nut is used (BACN10WM), or
- a self-aligning collar-washer assembly is used (BACC30BQ or BACC30AG).
- the structure is not magnesium.

NOTE: If a grip adjustment washer is necessary, put the washer between the fillet relief washer and the structure.

(3) Counterbore Substitution Washers

NOTE: When non-counterbored, self-locking nuts (BACN10GW, BACN10JC, BACN10YR, MS21042, MS21043, NAS679, NAS1291, NAS1804, and NAS1805) are used as an alternative to mating collars on hex-drive bolts, use counterbore substitution washers. When non-counterbored nuts are used with self-aligning washers (BACW10CA) use counterbore substitution washers. See Fig. 12 for washer selection.

Counterbore substitution washers can be used as corrosion protection washers. You are permitted to use counterbore washers plus the permitted number of fillet relief, grip length adjustment, and corrosion protection washers.

Counterbore substitution washers are not required for counterbored nuts (BACN10MT, BACN10TN, BACN10XJ, BACN10YT, BACN10YZ, BACN10ZV, BACN11E, KFN305, KFN511, KFN600, H600).

(a) Make sure that all of the threads on the nut touch the threads on the bolt.

BOEING PROPRIETARY - Copyright © - Unpublished Work - See title page for details.

(b) Use a 1/16 inch (1.6 mm) thick washer and a 1/32 inch (0.8 mm) thick washer with lightweight hex-drive bolts (BACB30VT, BACB30VU and BACB30YP). Put the 1/16 inch (1.6 mm) thick washer against the structure.

NOTE: If the chamfer on the end of the bolt is not fully above the end of the nut, only use a 1/16 inch (1.6 mm) thick washer.

(c) With standard hex-drive bolts (BACB30FM, BACB30FN, BACB30JC, BACB30MB, BACB30MY, BACB30ND, BACB30NW, BACB30NX, BACB30NY, BACB30YK, BACB30YL, BACB30YM, BACB30YN, HLT420, HLT421, HLT422 and HLT423) do the applicable step that follows:

1) For bolt sizes that are 1/4 inch diameter or less, use two 1/16 inch (1.6 mm) thick washers. This is also applicable to first, second, and third oversize fasteners for these bolt diameters.

NOTE: If the chamfer on the end of the bolt is not fully above the end of the nut, only use a 1/16 inch (1.6 mm) thick washer.

2) For bolt sizes that are 5/16 inch through 5/8 inch diameter (and for these size bolts that are first and second oversize), use two 1/16 inch (1.6 mm) thick washers. For these size bolts that are third oversize, use three 1/16 inch (1.6 mm) washers.

NOTE: If the chamfer on the end of a third oversize bolt is not fully above the end of the nut, only use two 1/16 inch (1.6 mm) thick washers.

3) For bolt sizes that are 3/4 inch or larger diameter, use three 1/16 inch (1.6 mm) thick washers. This is also applicable to first, second, and third oversize bolts.

NOTE: If the chamfer on the end of the bolt is not fully above the end of the nut, only use two 1/16 inch (1.6 mm) thick washers.

C. Lockbolt Installation and Removal

(1) The "pull type" lockbolt is installed with a type of pneumatic pulling gun. The gun pulls the shank of the bolt through the hole and at the same time, swages a collar on to the shank. The end of the shank, known as the pintail, breaks off at the correct load.

BOEING PROPRIETARY - Copyright © - Unpublished Work - See title page for details.

(2) Before you install the lockbolt collar, remove the sealant and/or contamination from the grooves of the lockbolt pintail. Very small quantities of sealant can stay on the pintail after it is cleaned.

NOTE: Sealant on the surface of the structure that has flowed from under a swaged collar is not usually permitted. Sealant is only permitted to flow from under a swaged collar if the lockbolt has a sealant escape groove.

(3) Grip length adjustment can be made as given in par. 7.B.

(4) Lockbolts can be driven out after collar removal. Collars can be removed by splitting them from one side with a chisel. Put a bucking bar on the opposite side of the collar during this operation, to prevent elongation of the holes. As an alternative the collars can be milled off.

D. Hex-Drive Bolt Installation and Removal

(1) Hex-drive bolts are a threaded fastener usually installed with a type of nut that has a one-piece collar with a hexagonal torquing device. The hexagonal torquing device breaks off at the correct load. This removes the need to measure torque.

NOTE: Hex-drive bolts must be replaced with new hex-drive bolts when removed collars or nuts are Alloy Steel, CRES or Titanium.

(2) The bolts can be installed with power or hand tools. Hand tools can be used as follows:

(a) Insert the bolt into the hole until the head is seated.

(b) Install the collar and turn it until it is finger-tight.

(c) Put a hexagonal key in the hexagonal recess and make sure that the bolt does not turn. Turn the collar with a modified ratchet and socket or a box wrench until the wrenching device is torqued off (Fig. 11).

(3) Where access is not available for the installation of the special use collar, it is permissible to use locknuts. This special collar is manufactured with a counterbore which allows for the bolt to fit into the recess in the collar. Counterbore substitution washers are necessary with non-counterbored locknuts. Refer to par. 7.B. and Fig. 12 for locknut selection and washer requirements. Refer to par. 7.D.(5) for torque procedure.

(4) After the collar is installed, inspect the bolt as follows:

(a) Examine the pin protrusion as given in Fig. 13.

(b) Examine the gaps under the bolt head and collar as given in Fig. 11.

(c) Examine head dishing in flush head fasteners as given in Fig. 11.

(5) Torque Procedure

(a) When the engineering drawing specifies an installation of multiple hex-drive bolts with locknuts (and the sequence to tighten the nuts is not specified), do not tighten adjacent bolts in a sequence.

BOEING PROPRIETARY - Copyright © - Unpublished Work - See title page for details.

1) If the bolts are in a circle: first hand-tighten opposite bolt in a sequence. Then torque all fasteners, in an alternating pattern, all around the circle.

2) If five or more bolts are in a row: first hand-tighten the end fasteners, then the fasteners that remain. Then torque all fasteners in an alternating pattern, all along the row.

(b) Torque nuts to the values given in SRM 51-30-4.

(6) Hex-drive bolts are removed by inserting a hexagonal key in the pin and gripping and turning the collar with locking pliers.

8. Radius Lead-In Bolts (Fig. 14)

A. General

(1) Radius lead-in bolts are used in this airplane for their good fatigue properties. These fasteners have a shank diameter larger than hex-drive bolts and lockbolts and are installed to give an interference fit. There are two oversizes available for each nominal size, that you can use in repair work.

B. Hole Preparation

(1) New Holes

(a) New holes may be produced using either of the following methods:

1) Hole produced in one operation with the specified size ST7044 precision drill. Drill the hole at 2000 rpm with a feed rate at 8 to 12 seconds for 2.0 inch free travel.

2) Hole produced from pilot hole.

a) Drill pilot hole 1/64 inch under the size of the ST1219Y-1RCA reamer pilot. Maintain perpendicularity of pilot hole to part surface within ± 1/2°.

b) Ream the pilot to the size of the ST1219Y-1RCA reamer pilot.

c) With the required size of ST1219Y-1RCA reamer/countersink installed in the ST1219X-Y tripod, adjust the depth setting for proper countersink depth.

d) Attach a hand feed drill motor to the tripod unit and ream hole using a steady hand feed at 500 rpm.

NOTE: Apply enough pressure to fully countersink the hole in one operation. The pressure exerted must be constant from hole to hole to maintain countersink depth control.

BOEING PROPRIETARY - Copyright © - Unpublished Work - See title page for details.

(b) Use a cutting and lubricating medium when drilling and reaming holes. A recommended cutting and lubricating medium is Cetyl Alcohol or BOELUBE, which comes in liquid, solid, paste or spray form.

(c) Before producing holes in the airplane structure drill and ream a minimum of 5 holes to the requirements of par. (d) (below).

(d) Before you install the fastener, inspect the hole to make sure that it agrees with the specifications in SRM 51-30-5.

NOTE: Inspect the hole diameter before you inspect for straightness.

(2) Oversize Holes

NOTE: When a fastener is removed, the hole must be oversized unless the hole is inspected and the hole condition is permitted as specified in SRM 51-30-5.

(a) With the next oversize ST1219Y-1RCA reamer/countersink tool installed in the ST1219X-Y tripod, oversize the hole as specified in SRM 51-30-5.

C. Installation

(1) Protect the hole countersink from galvanic corrosion as follows:

(a) Clean with solvent, Series 84 (Ref AMM/SOPM 20-30-84).

(b) Apply BMS 10-11, type 1, primer according to 51-24-00 of the Airplane Maintenance Manual.

(c) Allow the primer to air dry for 5 minutes before fastener installation.

(2) Select a bolt with the required grip length and thread protrusion as given in Fig. 14.

(3) If the thread protrusion requirements of Fig. 14 are not met, a grip adjustment washer may be used in Fig. 14.

BOEING PROPRIETARY - Copyright © - Unpublished Work - See title page for details.

(4) Check the lubrication on the bolt. Bolts with insufficient lubrication or no lubrication must be relubricated as follows:

WARNING: AVOID BREATHING BMS 3-2 SOLVENT VAPORS. DO NOT USE BMS 3-2 SOLVENT IN CONFINED SPACES OR AREAS WITHOUT MECHANICAL VENTILATION OR RESPIRATORY PROTECTION. AVOID CONTACT OF BMS 3-2 SOLVENT WITH EYES, SKIN, AND CLOTHING. WEAR APPROVED EYE PROTECTION, GLOVES, AND PROTECTIVE CLOTHING. BREATHING VAPORS OR ALLOWING SOLVENT TO CONTACT EYES OR SKIN IS HAZARDOUS.

KEEP BMS 3-2 SOLVENT AWAY FROM SOURCES OF HEAT, FIRE, OR SPARKS. BMS 3-2, TYPE I HAS A FLASH POINT AS LOW AS 100°F. HEAT, FIRE, OR SPARKS CAN CAUSE AN EXPLOSION.

(a) Prepare a solution that contains 8 ounces of cetyl alcohol and 1 pint of BMS 3-2, Type 1 solvent.

(b) Warm the mixture sufficiently to melt the cetyl alcohol. Mix thoroughly and allow to cool to ambient temperature.

(c) Immerse the bolts in the solution and soak for 2 minutes.

(d) Allow the bolts to dry before using.

NOTE: An alternate method of lubrication is the application of BOELUBE 100A light lubricant solution.

(5) Drive or press the bolt into the hole. The parts must be clamped together and the structure supported with a suitable bucking bar during this operation.

NOTE: A maximum interface separation of 0.004 inch is permissible at the bolt shank in fay seal areas, and in non faying seal areas a separation of less than 0.002 inch is permissible. To facilitate installation, holes may also be lubricated with cetyl alcohol.

(6) Install nuts and washers as given in par. 8. D. and Fig. 14.

(7) Torque Procedure

(a) When the engineering drawing specifies a multiple bolt installation (and the sequence to tighten the nuts is not specified), do not tighten adjacent bolts in a sequence.

1) If the bolts are in a circle: first hand-tighten opposite bolts in a sequence. Then torque all bolts, in an alternating pattern, all around the circle.

BOEING PROPRIETARY - Copyright © - Unpublished Work - See title page for details.

2) If the bolts are five or more in a row: first hand-tighten the end bolts, then the fasteners that remain. Then torque all bolts in an alternating pattern, all along the row.

(b) Torque nuts to the values given in SRM 51-30-04.

(8) Clean the threads of sealant or any other residue and install the nut to the torque wrench values specified in SRM 51-30-04. The installation of all bolts through parts assembled with faying surface seals should be completed with at least 60 minutes of the sealant application life left. After at least 20 minutes from the initial torque application, retorque the nuts to the maximum torque value +00 to -20 pound-inches (+00 to -2.26 N-M). Complete the retorquing before the sealant application life expires. Refer to SOPM 20-50-19 for the application life of sealant materials.

(9) Make sure that the dish on the head of the installed fastener is smooth and does not have a raised ring.

(10) Make sure that the bolt head is flush as given in SRM 51-70-00, (unless specified differently in an engineering drawing).

NOTE: Additional driving of the bolt to get correct flushness is permitted. Make sure that the nut is retightened as given in SRM 51-30-04.

(11) Make sure that the shank protrusion is in the specified limits given in Fig. 14.

(12) Examine the gaps under the bolt head and nut as given in Fig. 14.

D. Use of Washers

NOTE: See Fig. 14, Tables I through III for washer sizes and types.

(1) Seal Nuts

NOTE: Do not use a washer between a seal nut and the structure.

(2) Fillet Relief Washers Under Protruding Head Fasteners

(a) A head-to-shank relief is necessary for radius lead-in bolts. As an alternative to making a fillet relief in the structure, you can put a fillet relief washer under protruding head fasteners.

(b) A maximum of one washer is permitted for fillet relief.

(c) Only use washers that have a side with a fillet relief or a countersink.

(d) Put the fillet relief (or countersink) side of the washer under the head of the fastener.

BOEING PROPRIETARY - Copyright © - Unpublished Work - See title page for details.

(3) Grip Adjustment Washers

(a) A maximum of one washer is permitted for grip adjustment. Only use standard washers (no countersink washers) unless the grip adjustment washer is put directly under the head of a BACB30WR fastener (then a fillet relief washer or countersunk washer is necessary).

(b) You can use a grip adjustment washer with a counterbore substitution washer and/or a fillet relief washer. If a grip adjustment washer will be installed with a counterbore substitution washer: Put a standard grip adjustment washer between the counterbore substitution washer and the structure.

(4) Counterbore Substitution Washers

(a) One 1/16 inch (1.6 mm) thick washer can be used under a nominal size BACN10HY or BACN10SZ non-sealing nut for counterbore substitution.

(b) One 1/16 inch (1.6 mm) thick washer can be used when the BACN10MT self-aligning nut and BACW10AU self-aligning washer are used. Put the counterbore substitution washer under the BACH10AU self-aligning washer.

E. Removal

(1) Remove the fastener by removing the nut and driving out the bolt. Due to the interference fit of the bolt this may require some sharp blows initially; therefore, the structure must be supported by a bucking bar recessed to accept the bolt during removal. A washer must be placed over the protruding threaded end of the bolt to protect the structure.

NOTE: As an alternative, a hole can be drilled through the bolt.

9. Bolts

A. General

(1) The recommended fasteners in aluminum structure are aluminum coated titanium, aluminum coated A-286, or cadmium-plated A-286. Cadmium-plated alloy-steel fasteners are a structurally acceptable alternative. But, the cadmium plating is a sacrificial coating, and in a corrosive environment can come off of the fastener. This can cause the alloy–steel fastener to corrode. This can then cause streaks of rust and/or the start of corrosion on adjacent aluminum structure.

(2) Fasteners are installed wet with sealant.

NOTE: Refer to SRM 51-10-6 to install fasteners in the integral fuel tank and other procedures to apply sealant.

BOEING PROPRIETARY - Copyright © - Unpublished Work - See title page for details.

B. Installation

(1) All threads of the nut must be completely engaged and the complete chamfered portion of the end of the bolt must protrude beyond the outer surface of the nut. Flat ended bolts must protrude at least 1/32 inch (0.8 mm) beyond the outer surface of the nut.

(2) Nuts must not engage any incomplete threads next to the shank of the bolt.

(3) No lubricants other than which is on the nuts or bolts, as purchased are to be used unless otherwise specified.

(4) After inserting a bolt into the structure through a wet sealed area, it is not required to remove the sealant from the bolt threads. Make sure that the nut is tightened within the sealant squeeze out time specified in SOPM 20-50-19.

(5) No threads in bearing are permitted in fittings or sheets 0.093 inch or less in thickness. In thickness greater than 0.093 inch, a maximum of two threads are permitted in bearing (but not more than 25 percent of the minimum thickness of the hole wall will have threads in bearing). Refer to Figure 16 for the values of minimum bolt protrusion above the structure surface (that avoid exceeding limits for threads in bearing). This requirement does not apply to fully threaded fasteners, and does not apply to plate nut applications or through inserts.

(6) Bolt heads must be installed with heads up or forward, wherever practicable, unless otherwise specified.

C. Use of Washers

NOTE: The total number of washers that can be used for fillet relief, grip length adjustment, corrosion protection or counterbore substitution is three. Too many washers can cause unwanted eccentricity and can cause fasteners to become loose. But, if you cannot get a good grip length adjustment, have an engineer do an analysis. An engineer can make a decision to add another washer.

Washer material must be similar to the fastener and structure materials. Refer to SRM 51-10-2 for the classification of dissimilar materials. The correct washer material and part numbers to use are given in Fig. 15.

(1) Fillet Relief Washers Under Protruding Head Fasteners.

(a) A head-to-shank relief is necessary for all types of protruding head bolts. As an alternative to making a fillet relief in the structure, you can put a fillet relief washer under protruding head bolts.

(b) A maximum of one washer can be used for fillet relief.

(c) Only use washers that have a side with a fillet relief or countersink.

(d) Put the fillet relief (or countersunk) side of the washer under the head of the fastener.

BOEING PROPRIETARY - Copyright © - Unpublished Work - See title page for details.

(2) Corrosion Protection and Grip Length Adjustment Washers

NOTE: The maximum number of these types of washer that can be used is two.

(a) Only use standard washers (no countersunk washers) unless the grip adjustment washer is put directly under a protruding head (then a fillet relief or countersunk washer is necessary).

(b) Install the washer(s) as follows:

1) You can put one or two washers between a standard nut and the structure.

2) You can put one or two washers between a standard nut and a self-aligning washer (BACW10CA).

3) You can put one grip adjustment washer under a fastener head when both a self-aligning nut and a self-aligning washer are used (BACN10MT with a BACW10AU).

NOTE: If a grip adjustment washer is necessary, put the washer between the fillet relief washer and the structure.

(3) Counterbore Substitution Washers

NOTE: Use counterbore substitution washers with non-counterbored, self-locking nuts (BACN10GW, BACN10JC, BACN10YR, MS21042, MS21043, NAS679, NAS1291, NAS1804, and NAS1805). When non-counterbored nuts are used with self-aligning washers (BACW10CA), use counterbore substitution washers. See Fig. 16 for washer selection.

Counterbore substitution washers are not required for counterbored nuts (BACN10MT, BACN10TN, BACNIOXJ, BACN10YT, BACN10YZ, BACN10ZV, BACN11E, KFN305, KFN511, KFN600, H600).

(a) Make sure that all of the threads on the nut touch the threads on the bolt.

(b) Only use plain (noncountersunk) washers.

D. Torque Procedure

(1) When the engineering drawing specifies an installation of multiple bolts or screws (and the sequence to tighten the nuts is not specified), do not tighten adjacent fasteners in a sequence.

(a) If the fasteners are in a circle: first hand-tighten opposite fasteners in a sequence. Then torque all fasteners, in an alternating pattern, all around the circle.

(b) If the fasteners are five or more in a row: first hand-tighten the end fasteners, then the fasteners that remain. Then torque all fasteners in an alternating pattern, all along the row.

BOEING PROPRIETARY - Copyright © - Unpublished Work - See title page for details.

(2) Torque nuts to the values given in SRM 51-30-04.

(3) Clean the threads of sealant or any other residue and install the nut to the torque wrench values specified in SRM 51-30-04. The installation of all bolts through parts assembled with faying surface seals should be completed with at least 60 minutes of the sealant application life left. After at least 20 minutes from the initial torque application, retorque the nuts to the maximum torque value +00 to -20 pound-inches (+00 to -2.26 N-M). Complete the retorquing before the sealant application life expires. Refer to SOPM 20-50-19 for the application life of sealant materials.

E. Evaluate gaps under the bolt head and nut as given in Fig. 15.

10. Installation of Fasteners in Composites

A. Fiberglass Reinforced Plastic (GFRP) panels

(1) Remove any loose fasteners.

(2) Drill holes, if necessary, per specific component repair instructions.

(3) Prime all fastener holes.

(4) Install fasteners wet with BMS 5-95 sealant.

BOEING PROPRIETARY - Copyright © - Unpublished Work - See title page for details.

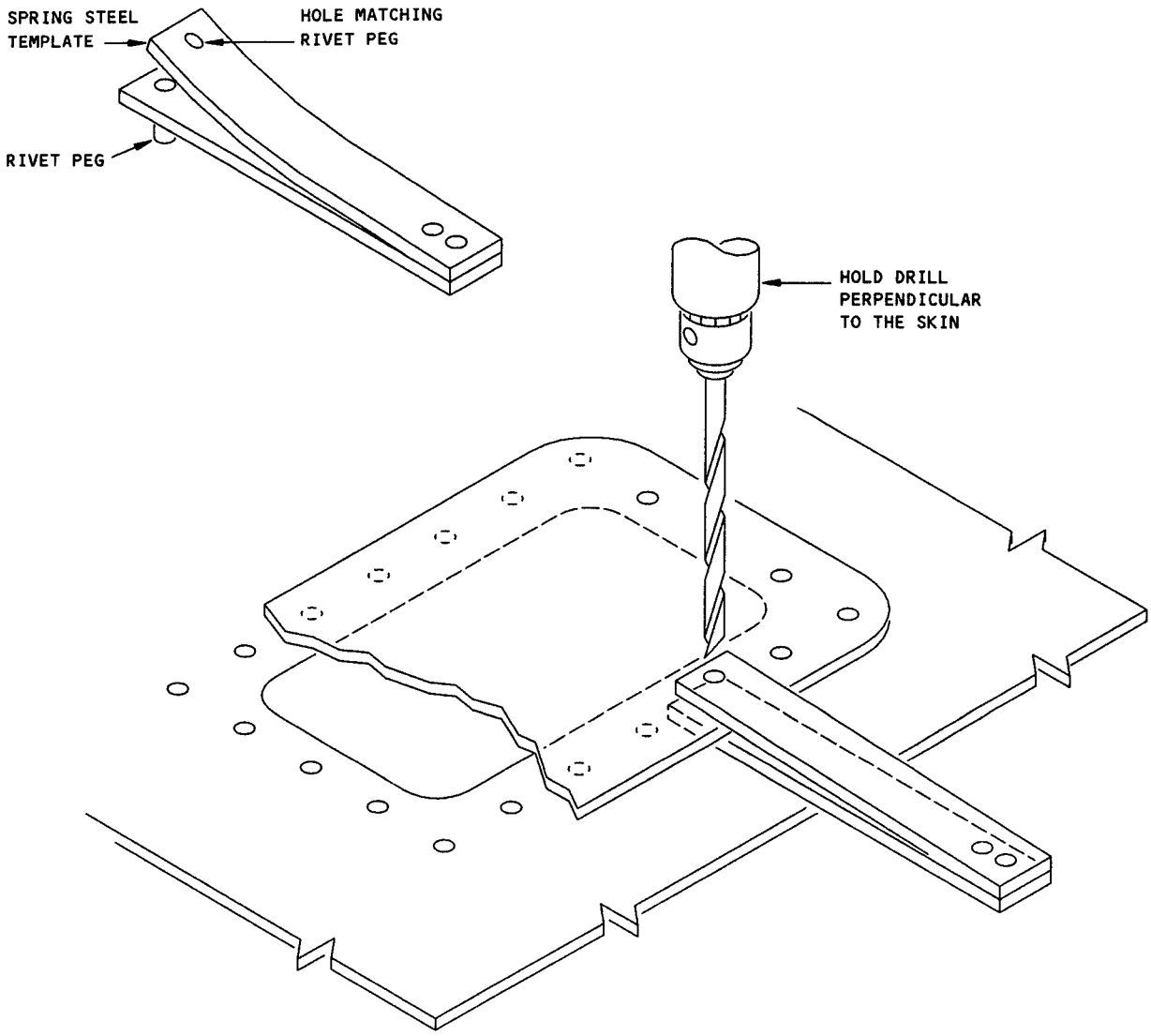

Hole Finder
Figure 1

BOEING PROPRIETARY - Copyright © - Unpublished Work - See title page for details.

NOTES

- SEE DETAIL I FOR INSPECTION OF FLUSHNESS.

FASTENER	HEAD HEIGHT SPECIFICATIONS FOR FLUSH HEAD FASTENERS
RIVETS	• UNLESS SEPCIFIED DIFFERENTLY ON THE ENGINEER DRAWING, FLUSH HEAD RIVETS ON NONAERODYNAMIC SURFACES MUST BE FLUSH TO THE SPECIFICATIONS THAT FOLLOW: (1) BACR15GF, BACR15CE AND NAS1097 RIVETS MUST BE FLUSH -0.000 TO +0.005 INCH. (2) ALL OTHER COUNTERSUNK RIVETS MUST BE FLUSH -0.000 TO +0.010 INCH. • UNLESS SPECIFIED DIFFERENTLY IN SRM 51-70 OR ON THE ENGINEERING DRAWING, FLUSH RIVET HEADS ON AERODYNAMIC SURFACES MUST BE FLUSH TO THE SPECIFICATIONS THAT FOLLOW: (1) BACR15GF RIVETS MUST BE FLUSH TO +0.001 TO +0.007 INCH. (2) ALL OTHER FLUSH HEAD RIVETS MUST BE FLUSH -0.001 TO +0.002 INCH. • BACR15GF, NAS1097, AND BACR15CE RIVET HEADS MUST NOT BE SHAVED OR MODIFIED TO AGREE WITH FLUSHNESS SPECIFICATIONS. • RIVETS OTHER THAN BACR15GF, BACR15CE AND MS14218 RIVETS CAN BE SHAVED AS SPECIFIED IN SRM 51-70 TO AGREE WITH FLUSHNESS SPECIFICATIONS.
BLIND FASTENERS	• FLUSHNESS SPECIFICATION FOR FLUSH-HEAD FASTENERS SHALL BE -0.005 TO +0.010 INCH UNLESS SPECIFIED DIFFERENTLY ON THE ENGINEERING DRAWING. (1) THE LOCKING RINGS AND/OR STEMS OF NAS1398, NAS1738, NAS1739, BACR15FP, AND BACR15FR RIVETS CAN BE SHAVED A MAXIMUM OF 0.010 INCH TO AGREE WITH THE FLUSHNESS SPECIFICATION. SHAVING OF THE RIVET HEAD IS NOT PERMITTED. (2) THE STEMS OF BACB30AY, BACB30CC, BACB30JG BOLTS CAN BE SHAVED TO AGREE WITH THE FLUSHNESS SPECIFICATION. QUALITY CONTROL INSPECTION AND APPROVAL OF STEM POSITION PRIOR TO SHAVING IS REQUIRED. SHAVING OF THE BOLT HEAD IS NOT ALLOWED. • THE LOCKING RINGS AND/OR STEMS OF MS90353, MS90354, MS21140 AND MS21141 BOLTS MAY BE SHAVED TO MEET FLUSHNESS REQUIREMENTS. QUALITY CONTROL INSPECTION AND APPROVAL OF LOCKING RING AND STEM POSITION PRIOR TO SHAVING IS REQUIRED. SHAVING OF THE BOLT HEAD IS NOT ALLOWED.

TABLE I

Fastener Flushness Specifications
Figure 2 (Sheet 1)

BOEING PROPRIETARY - Copyright © - Unpublished Work - See title page for details.

FASTENER	HEAD HEIGHT SPECIFICATIONS FOR FLUSH HEAD FASTENERS
LOCKBOLTS AND HEX-DRIVE BOLTS	• FLUSH HEAD FASTENERS MUST BE FLUSH -0.005 TO +0.010 INCH UNLESS SPECIFIED DIFFERENTLY IN SRM 51-70 OR ON THE ENGINEER DRAWING. • DOMED HEAD FASTENERS (BACB30XT, BACB30XU AND BACB30YP) MUST BE FLUSH +0.0052 TO +0.0058 INCH UNLESS SPECIFIED DIFFERENTLY IN SRM 51-70 OR ON THE ENGINEER DRAWING. • FLUSH HEAD FASTENERS THAT ARE TO BE COATED WITH BMS 5-62, BMS 8-70, BMS 8-78, OR BMS 8-103, MUST BE FLUSH -0.005 TO +0.015 INCH. • IT IS NOT PERMITTED TO SHAVE THE HEADS OF LOCKBOLTS AND HEX-DRIVE BOLTS TO AGREE WITH THE FLUSHNESS SPECIFICATION. IF THE FASTENER HEAD IS NOT FLUSH TO SPECIFICATION: (1) MORE DRIVING OF THE PIN IS PERMITTED FOR HEX-DRIVE BOLTS IF THE COLLAR IS REPLACED OR THE NUT IS RE-TIGHTENED AS SPECIFIED IN SRM 51-30-04. (a) HEX-DRIVE BOLTS MUST BE REPLACED WITH NEW FASTENERS WHEN THE REMOVED COLLARS OR NUTS ARE ALLOY STEEL, CRES OR TITANIUM. (b) WHEN ALUMINUM COLLARS OR NUTS ARE REMOVED FROM COMPLETED ASSEMBLIES OR INSTALLATION: EXAMINE THE HEX-DRIVE BOLT FOR THREAD DAMAGE BEFORE YOU INSTALL A NEW COLLAR OR NUT. IF THE THREAD IS DAMAGED, THE HEX-DRIVE BOLT MUST BE REPLACED WITH A NEW HEX-DRIVE BOLT. (2) FOR LOCKBOLTS, MORE DRIVING IS NOT PERMITTED. THE FASTENER MUST BE REPLACED.
BOLTS	• FLUSH HEAD FASTENERS MUST BE FLUSH -0.005 TO +0.010 INCH UNLESS SPECIFIED DIFFERENTLY IN SRM 51-70 OR ON THE ENGINEER DRAWING. • FLUSH HEAD FASTENERS THAT ARE TO BE COATED WITH BMS 5-62, BMS 8-70, BMS 8-78, OR BMS 8-103, MUST BE FLUSH -0.005 TO +0.015 INCH. • IT IS NOT PERMITTED TO SHAVE THE HEADS OF BOLTS TO AGREE WITH THE FLUSHNESS SPECIFICATION.
RADIUS LEAD-IN BOLTS	• BACB30PT BOLTS MUST BE FLUSH -0.003 TO +0.003, UNLESS SPECIFIED DIFFERENTLY IN SRM 51-70 OR ON THE ENGINEER DRAWING. BACB30WQ BOLTS MUST BE FLUSH AS SPECIFIED IN SRM 51-70 OR ON THE ENGINEER DRAWING. IT IS NOT PERMITTED TO SHAVE THE HEADS OF BOLTS TO AGREE WITH THE FLUSHNESS SPECIFICATION.

TABLE I (CONT)

Fastener Flushness Specifications
Figure 2 (Sheet 2)

BOEING PROPRIETARY - Copyright © - Unpublished Work - See title page for details.

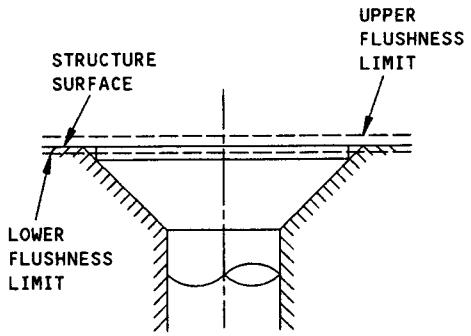

FASTENER HEAD HAS A CONTINUOUS SURFACE WITH THE STRUCTURE (ZERO VALUE)

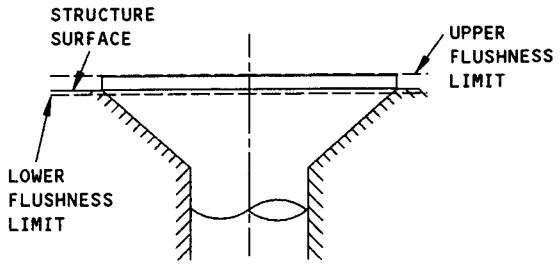

FASTENER HEAD IS AT UPPER FLUSHNESS LIMIT (POSITIVE VALUE)

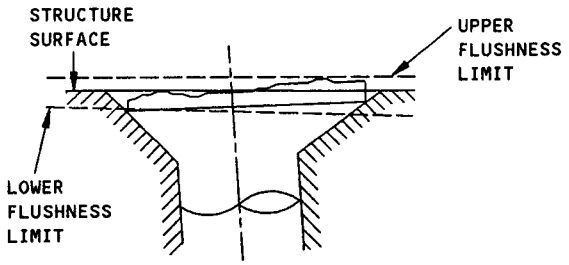

FASTENER HOLE NOT PERPENDICULAR TO STRUCTURE SURFACE. TOP OF FASTENER HEAD NOT PERPENDICULAR TO SHANK. TOP OF FASTENER HEAD NOT FLAT. ALL EDGES ARE AT OR IN BETWEEN THE UPPER AND LOWER FLUSHNESS LIMITS.

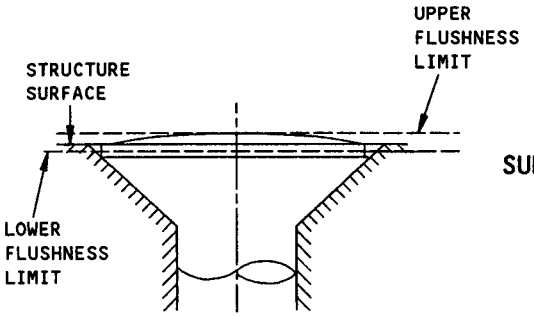

FASTENER EXACTLY AT LOWER FLUSHNESS LIMIT (NEGATIVE VALUE)

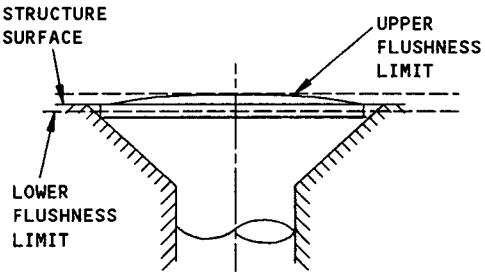

FASTENER WITH CROWN (OR DOME) ON TOP OF HEAD. FASTENER FLUSHNESS JUST MEETS FLUSHNESS LIMITS

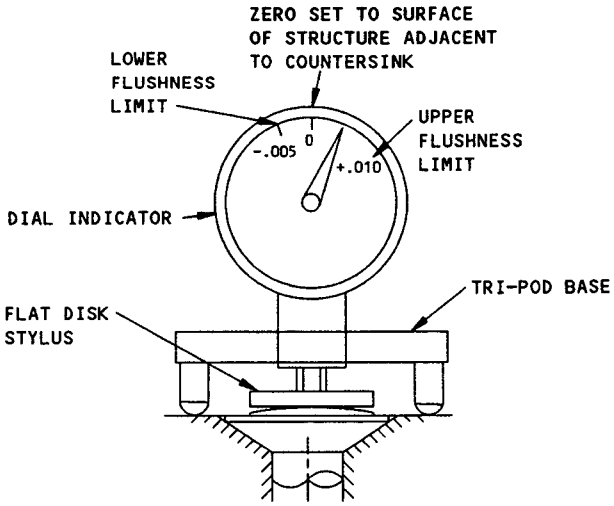

DIAL INDICATOR AND FLAT DISK STYLUS FOR FINDING PERMITTED FLUSHNESS VALUES (THIS METHOD ALSO APPLIES TO FLUSH HEAD FASTENERS WITHOUT A CROWN OR DOME)

HOW TO MEASURE FLUSHNESS
DETAIL I

Fastener Flushness Specifications
Figure 2 (Sheet 3)

BOEING PROPRIETARY - Copyright © - Unpublished Work - See title page for details.

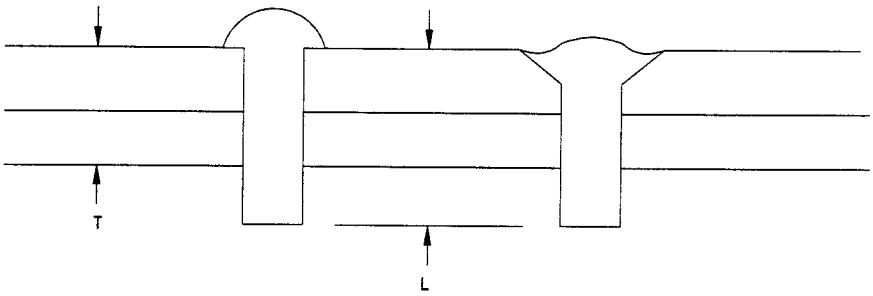

RIVET LENGTH (L) AND GRIP (T) DIMENSIONS FOR STANDARD ALUMINUM SOLID RIVETS
DETAIL I

NOTES

- THE SOURCE OF INFORMATION FOR THIS FIGURE CAN BE FOUND IN BOEING PROCESS SPECIFICATION BAC5004-1
- SEE TABLE I FOR GRIP RANGES AND RIVET LENGTHS.
- SEE TABLES II AND III FOR BUTTON DIMENSIONS.
- REFER TO FIGURES 5 AND 6 FOR ANALYSIS OF THE RIVET HEAD AND BUTTON AFTER INSTALLATION

[A] THESE RIVET LENGTHS ARE FOR NEW HOLES AND OVERSIZED HOLES ONLY. IF A HOLE THAT WAS FILLED BEFORE IS NOT OVERSIZED, USE A RIVET LENGTH ONE SIZE HIGHER.

[B] FOR RIVETS WITH A SPECIFIED 1.4X DIAMETER DRIVEN HEAD THE NEXT HALF-SIZED (R5 SUFFIX TO PART NUMBER) LENGTH MAY BE REQUIRED. FOR RIVETS WITH A SPECIFIED 1.5X DIAMETER DRIVEN HEAD, THE NEXT WHOLE DASH NUMBER MAY BE REQUIRED.

IN THICK STACKUPS, FOR RIVETS INSTALLED IN HOLES THAT ARE THE MAXIMUM ALLOWED DIAMETER, THE NEXT HALF-SIZED (R5) LENGTH CAN BE NECESSARY.

IN MINIMUM STACKUPS, A HALF-SIZE (R5 SUFFIX TO PART NUMBER) SHORTER LENGTH CAN BE USED FOR WEIGHT SAVINGS.

[C] OVERSIZE REPLACEMENTS

[D] WHEN NORMAL HAND DRIVING STANDARDS ARE SPECIFIED

[E] WHEN OVER-DRIVING IS SPECIFIED

Dimensions for Driving Non-Fluid-Tight Solid Shank Rivets
Figure 3 (Sheet 1)

BOEING PROPRIETARY - Copyright © - Unpublished Work - See title page for details.

GRIP RANGES FOR RIVET LENGTHS AND DIAMETERS [B]										
RIVET LENGTH L [A]										
SIZE	DASH NO.	3/32 OR 3 DIA	1/8 OR 4 DIA	5/32 OR 5 DIA	3/16 OR 6 DIA	7/32 OR 7 DIA	1/4 OR 8 DIA	9/32 OR 9 DIA	5/16 OR 10 DIA	3/8 OR 12 DIA
3/16	-3	0.084	0.058	0.035						
1/4	-4	0.085 0.142	0.059 0.117	0.036 0.093	0.068					
5/16	-5	0.143 0.201	0.118 0.176	0.094 0.152	0.069 0.127	0.107	0.078	0.058		
3/8	-6	0.202 0.260	0.177 0.234	0.153 0.211	0.128 0.185	0.108 0.166	0.079 0.136	0.059 0.117	0.087	0.038
7/16	-7	0.261 0.319	0.235 0.293	0.212 0.270	0.186 0.244	0.167 0.225	0.137 0.195	0.118 0.176	0.088 0.146	0.039 0.097
1/2	-8	0.320 0.377	0.294 0.352	0.271 0.327	0.245 0.303	0.226 0.283	0.196 0.254	0.177 0.234	0.146 0.205	0.098 0.156
9/16	-9	0.378 0.436	0.353 0.411	0.328 0.387	0.304 0.362	0.284 0.342	0.255 0.313	0.235 0.293	0.206 0.264	0.157 0.215
5/8	-10	0.437 0.495	0.412 0.469	0.388 0.446	0.363 0.420	0.343 0.401	0.314 0.371	0.294 0.352	0.265 0.322	0.216 0.273
11/16	-11	----	0.470 0.528	0.447 0.505	0.421 0.479	0.402 0.460	0.372 0.430	0.353 0.411	0.323 0.381	0.274 0.332
3/4	-12	----	0.529 0.587	0.506 0.563	0.480 0.538	0.461 0.518	0.431 0.489	0.412 0.469	0.382 0.440	0.333 0.391
13/16	-13	----	0.588 0.646	0.564 0.622	0.539 0.597	0.519 0.577	0.490 0.548	0.470 0.528	0.441 0.499	0.392 0.450
7/8	-14	----	----	0.623 0.681	0.598 0.655	0.578 0.636	0.549 0.606	0.529 0.587	0.500 0.557	0.451 0.508
15/16	-15	----	----	0.682 0.740	0.656 0.714	0.634 0.695	0.607 0.665	0.588 0.646	0.558 0.616	0.509 0.567
1	-16	----	----	0.741 0.798	0.715 0.773	0.696 0.753	0.666 0.724	0.647 0.704	0.617 0.675	0.568 0.626
17/16	-17	----	----	----	0.774 0.832	0.754 0.812	0.725 0.783	0.705 0.763	0.676 0.734	0.627 0.685
9/8	-18	----	----	----	0.833 0.890	0.813 0.871	0.784 0.841	0.764 0.822	0.735 0.792	0.686 0.743
19/16	-19	----	----	----	0.891 0.949	0.872 0.930	0.842 0.900	0.823 0.881	0.793 0.851	0.744 0.802
5/4	-20	----	----	----	0.950 1.008	0.931 0.988	0.901 0.959	0.882 0.939	0.852 0.910	0.803 0.861
21/16	-21	----	----	----	----	0.989 1.047	0.960 1.018	0.940 0.998	0.911 0.969	0.862 0.920
11/8	-22	----	----	----	----	----	1.019 1.076	0.999 1.057	0.970 1.027	0.921 0.978

GRIP RANGES AND RECOMMENDED RIVET LENGTHS FOR STANDARD ALUMINUM SOLID RIVETS

TABLE I

Dimensions for Driving Non-Fluid-Tight Solid Shank Rivets
Figure 3 (Sheet 2)

BOEING PROPRIETARY - Copyright © - Unpublished Work - See title page for details.

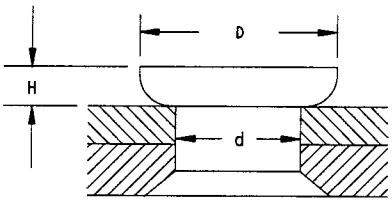

STANDARD FLAT DRIVEN HEAD

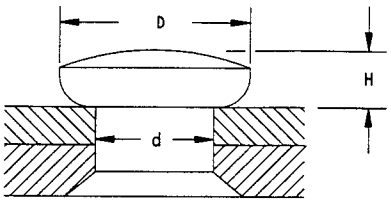

UNIVERSAL DRIVEN HEAD

NOMINAL RIVET DIAMETER	D MINIMUM DRIVEN RIVET BUTTON DIAMETER				H DRIVEN RIVET BUTTON THICKNESS OR HEIGHT		
	ALL RIVETS EXCEPT AS NOTED		BACR15GF AND 7050 ALUMINUM ALLOY RIVETS		BACR15GF BACR15CE BACR15DS NAS1097	ALL OTHER RIVETS	ALL RIVETS
	1.3d [D]	1.4d [E]	1.4d [D]	1.5d [E]	MINIMUM	MINIMUM	MAXIMUM RECOMMENDED
1/16	0.081	0.088	0.088	0.094	0.025	0.025	0.040
3/32	0.122	0.131	0.131	0.141	0.038	0.038	0.060
1/8	0.165	0.175	0.175	0.188	0.050	0.050	0.080
5/32	0.203	0.219	0.219	0.234	0.050	0.062	0.100
3/16	0.245	0.264	0.264	0.282	0.060	0.075	0.120
7/32 [C]	0.285	0.311	0.311	0.333	0.070	0.085	0.140
1/4	0.325	0.350	0.350	0.375	0.080	0.100	0.160
9/32 [C]	0.365	0.397	0.397	0.425	0.090	0.110	0.180
5/16	0.406	0.438	0.438	0.465	0.125	0.125	0.200
11/32 [C]	0.450	0.481	0.481	0.515	0.135	0.135	0.210
3/8	0.488	0.525	0.525	0.562	0.150	0.150	0.210
13/32 [C]	0.530	0.569	0.569	0.609	0.165	0.165	0.215

TABLE II

NOMINAL RIVET DIAMETER	THICKNESS (t) OF SHEET ADJACENT TO RIVET BUTTON	BUTTON THICKNESS MINIMUM	BUTTON DIAMETER MINIMUM
3/32	0.016–0.050	0.023	0.113
	0.051 AND ABOVE	0.038	0.122
1/8	0.016–0.050	0.030	0.150
	0.051 AND ABOVE	0.050	0.163
5/32	0.016–0.050	0.035	0.180
	0.051 AND ABOVE	0.062	0.203
3/16	0.016–0.050	0.040	0.222
	0.051 AND ABOVE	0.075	0.244
1/4	0.016–0.050	0.050	0.275
	0.051 AND ABOVE	0.087	0.325

CRES AND NICKEL-COPPER RIVETS
TABLE III

Dimensions for Driving Non-Fluid-Tight Solid Shank Rivets
Figure 3 (Sheet 3)

BOEING PROPRIETARY - Copyright © - Unpublished Work - See title page for details.

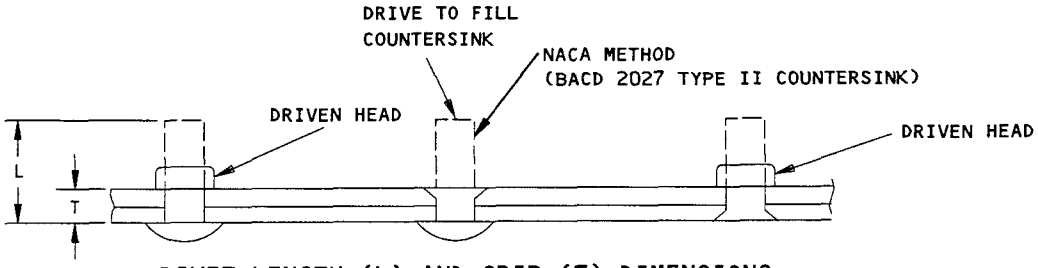

RIVET LENGTH (L) AND GRIP (T) DIMENSIONS
DETAIL I

NOMINAL RIVET LENGTH L			APPROXIMATE GRIP T-INCHES						
DECIMAL	FRACTION	DASH NO.	3/32 DIA	1/8 DIA	5/32 DIA	3/16 DIA	1/4 DIA	5/16 DIA	3/8 DIA
0.1875	3/16	-3	0.086						
0.2500	1/4	-4	0.142	0.117	0.087				
0.3125	5/16	-5	0.199	0.174	0.146	0.119			
0.3750	3/8	-6	0.235	0.232	0.205	0.178			
0.4375	7/16	-7	0.312	0.290	0.263	0.237	0.180	0.120	
0.5000	1/2	-8	0.368	0.348	0.322	0.295	0.240	0.181	
0.5625	9/16	-9	0.424	0.406	0.381	0.356	0.300	0.242	0.183
0.6250	5/8	-10	0.480	0.464	0.439	0.416	0.360	0.302	0.244
0.6875	11/16	-11		0.522	0.498	0.475	0.420	0.362	0.307
0.7500	3/4	-12		0.579	0.557	0.534	0.480	0.423	0.366
0.8125	13/16	-13		0.637	0.617	0.594	0.540	0.484	0.427
0.8750	7/8	-14			0.675	0.654	0.600	0.544	0.488
0.9375	15/16	-15			0.732	0.712	0.660	0.605	0.549
1.0000	1	-16			0.782	0.773	0.720	0.665	0.610
1.0625	1 1/16	-17				0.832	0.780	0.726	0.671
1.1250	1 1/8	-18				0.890	0.840	0.787	0.732
1.1875	1 3/16	-19					0.901	0.847	0.793
1.2500	1 1/4	-20					0.961	0.908	0.854
1.3125	1 5/16	-21					1.021	0.968	0.915
1.3750	1 3/8	-22						1.029	0.976
1.4375	1 7/16	-23						1.090	1.037
1.5000	1 1/2	-24						1.150	1.098

NOMINAL RIVET LENGTH L AND APPROXIMATE GRIP T-INCHES
TABLE I

NOTES

- THE SOURCE OF INFORMATION FOR THIS FIGURE CAN BE FOUND IN BOEING PROCESS SPECIFICATION BAC5047
- REFER TO FIGURES 5 AND 6 FOR ANALYSIS OF THE RIVET HEAD AND BUTTON AFTER INSTALLATION

[A] OVERSIZE REPLACEMENT

Dimensions for Driving Fluid-Tight Solid Shank Rivets
Figure 4 (Sheet 1)

BOEING PROPRIETARY - Copyright © - Unpublished Work - See title page for details.

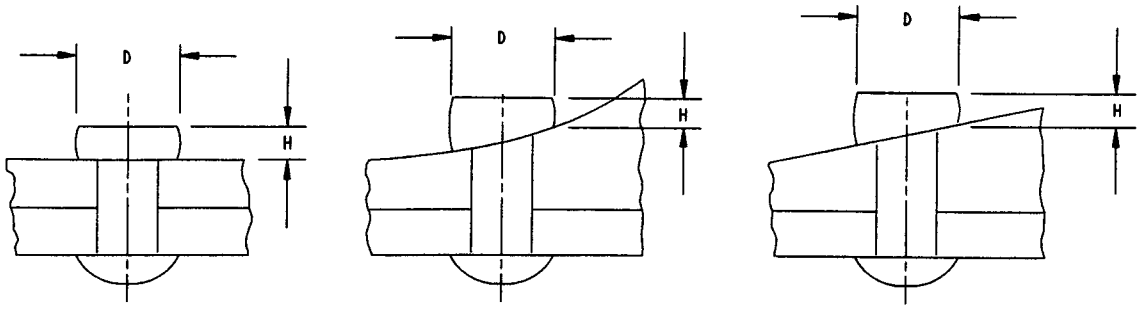

FLAT DRIVEN HEAD CURVED DRIVEN HEAD TAPERED DRIVEN HEAD

DRIVEN RIVET BUTTON DIMENSIONS
DETAIL II

NOMINAL RIVET DIA		D MINIMUM BUTTON DIAMETER		H BUTTON THICKNESS	
		ALL RIVETS EXCEPT AS NOTED	7050 ALUMINUM ALLOY RIVETS	MINIMUM	MAXIMUM (RECOMMENDED)
0.1250	1/8	0.165	-- --	0.050	0.080
0.1560	5/32	0.203	0.219	0.062	0.100
0.1875	3/16	0.245	0.264	0.075	0.120
0.2190	7/32 A	0.285	0.311	0.085	0.140
0.2500	1/4	0.325	0.350	0.100	0.160
0.2810	9/32 A	0.365	0.397	0.110	0.180
0.3125	5/16	0.406	0.438	0.125	0.200
0.3440	11/32 A	0.450	0.482	0.135	0.210
0.3750	3/8	0.488	0.525	0.150	0.210
0.4060	13/32 A	0.530	-- --	0.165	0.215
0.4370	7/16	0.570	-- --	0.175	0.220
0.4690	15/32 A	0.610	-- --	0.190	0.230

HAND OR MACHINE DRIVEN RIVET BUTTON DIMENSIONS
TABLE II

Dimensions for Driving Fluid-Tight Solid Shank Rivets
Figure 4 (Sheet 2)

BOEING PROPRIETARY - Copyright © - Unpublished Work - See title page for details.

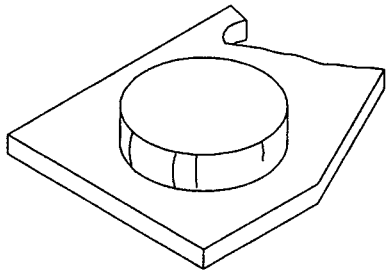

VERTICAL CRACKS DUE TO LAPS
IN THE MATERIAL IS SATISFACTORY
DETAIL I

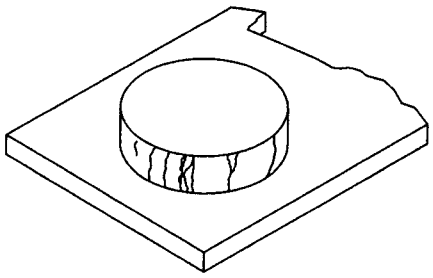

VERTICAL CRACKS IN CRES ALLOY,
NICKEL-COPPER ALLOY, AND TITANIUM RIVETS
DETAIL II

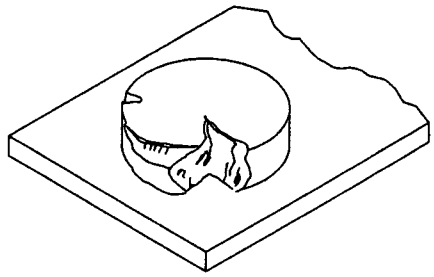

VERTICAL CRACKS DUE TO OVERHEATING
DURING HEAT TREATMENT
IS UNSATISFACTORY
DETAIL III

NOTES

- THE SOURCE OF INFORMATION FOR THIS FIGURE CAN BE FOUND IN BOEING PROCESS SPECIFICATIONS BAC5004-1 AND BAC5047
- SEE DETAILS I THRU III FOR VERTICAL CRACKS IN FLUID-TIGHT AND NON FLUID-TIGHT RIVETS
- SEE DETAIL IV FOR DIAGONAL CRACKS IN NON FLUID-TIGHT RIVETS
- SEE DETAIL V FOR DIAGONAL CRACKS IN FLUID-TIGHT RIVETS

Analysis of Cracks in the Buttons of Solid Shank Rivets
Figure 5 (Sheet 1)

BOEING PROPRIETARY - Copyright © - Unpublished Work - See title page for details.

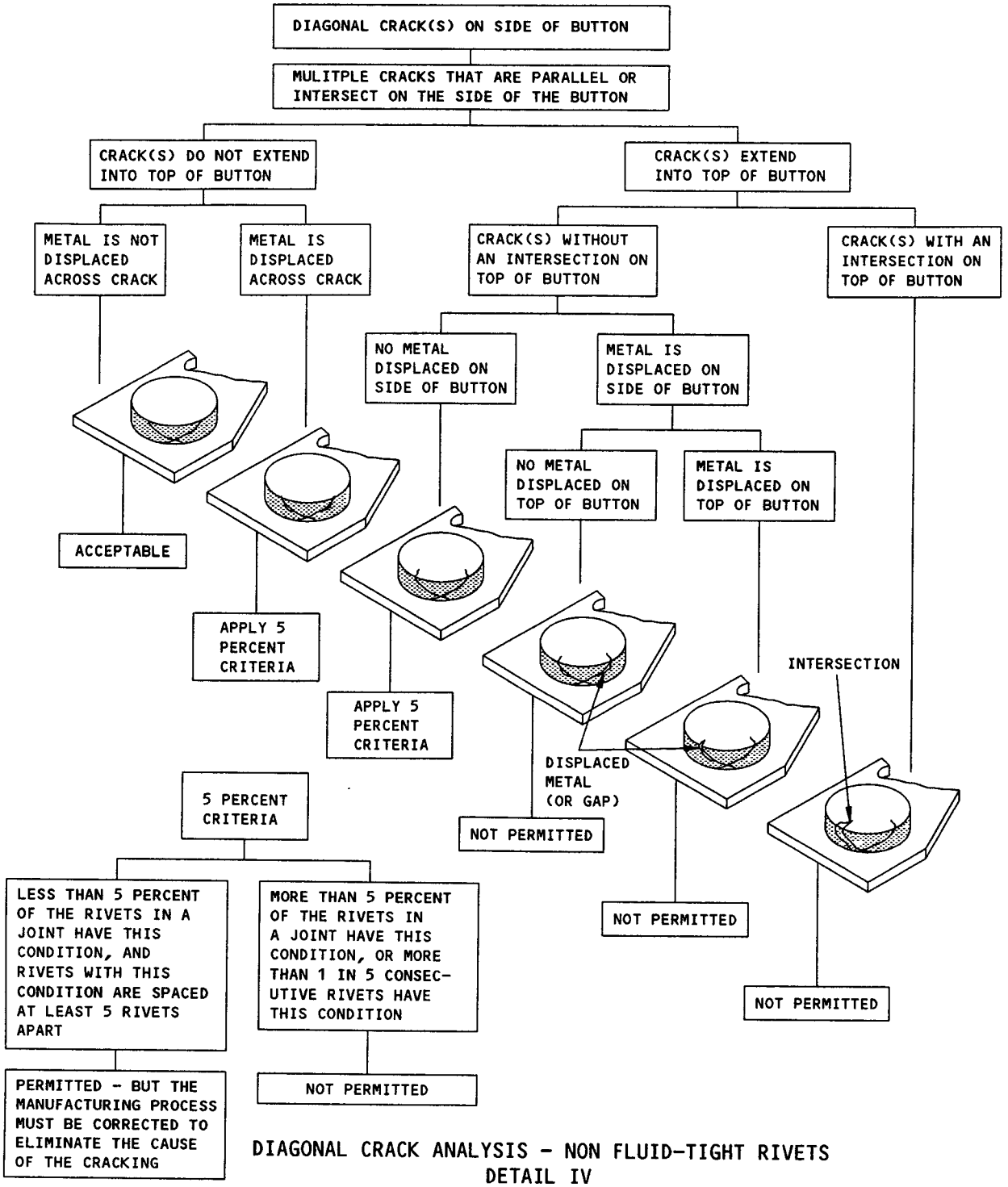

DIAGONAL CRACK ANALYSIS - NON FLUID-TIGHT RIVETS
DETAIL IV

Analysis of Cracks in the Buttons of Solid Shank Rivets
Figure 5 (Sheet 2)

BOEING PROPRIETARY - Copyright © - Unpublished Work - See title page for details.

SATISFACTORY
NO DISPLACED METAL (OR GAPS)

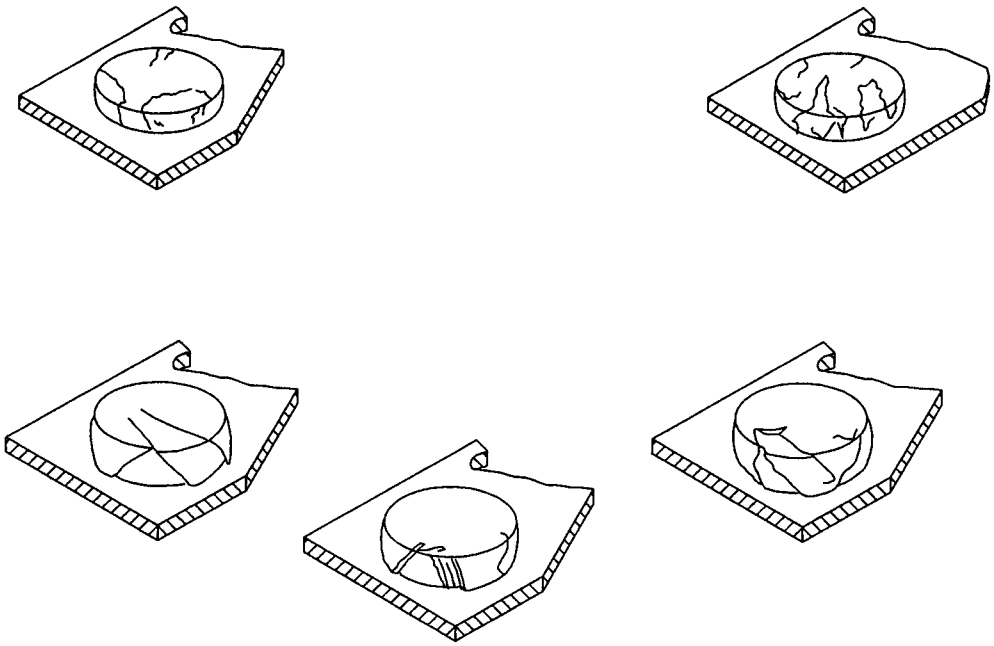

UNSATISFACTORY
DISPLACED METAL OR CRACKS WITH AN INTERSECTION
ON THE FLAT SURFACE

DIAGONAL CRACKS - FLUID-TIGHT RIVETS
DETAIL V

Analysis of Cracks in the Buttons of Solid Shank Rivets
Figure 5 (Sheet 3)

BOEING PROPRIETARY - Copyright © - Unpublished Work - See title page for details.

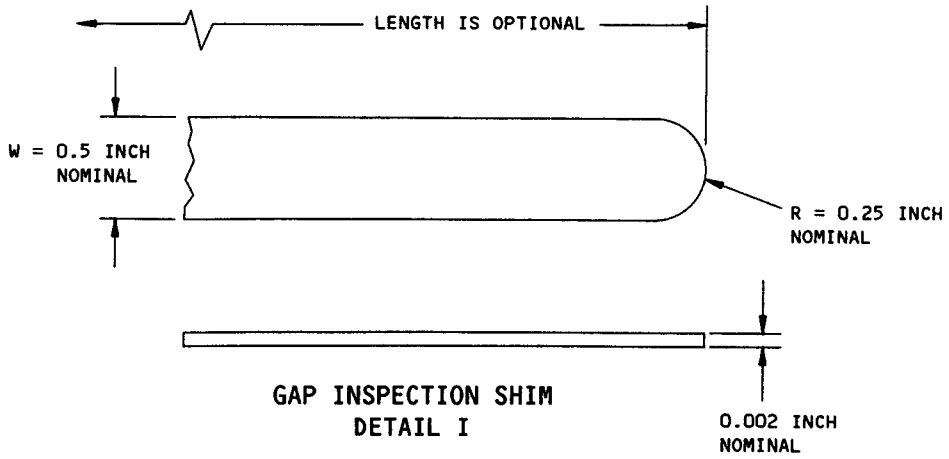

INSPECTION	GAP ANALYSIS (REFERENCE BAC5004-1 AND BAC5047)
PROTRUDING HEADS	• SEE DETAIL II
FLUSH HEADS	• SEE DETAIL III FOR NON-FLUID-TIGHT RIVETS • SEE DETAIL IV FOR FLUID-TIGHT RIVETS
NON-FLUSH DRIVEN BUTTONS (ALL RIVETS)	• SEE DETAIL V
FLUSH DRIVEN BUTTONS (ALL RIVETS)	• SEE DETAIL VI

TABLE I

Gap Analysis for Rivet Heads and Buttons
Figure 6 (Sheet 1)

BOEING PROPRIETARY - Copyright © - Unpublished Work - See title page for details.

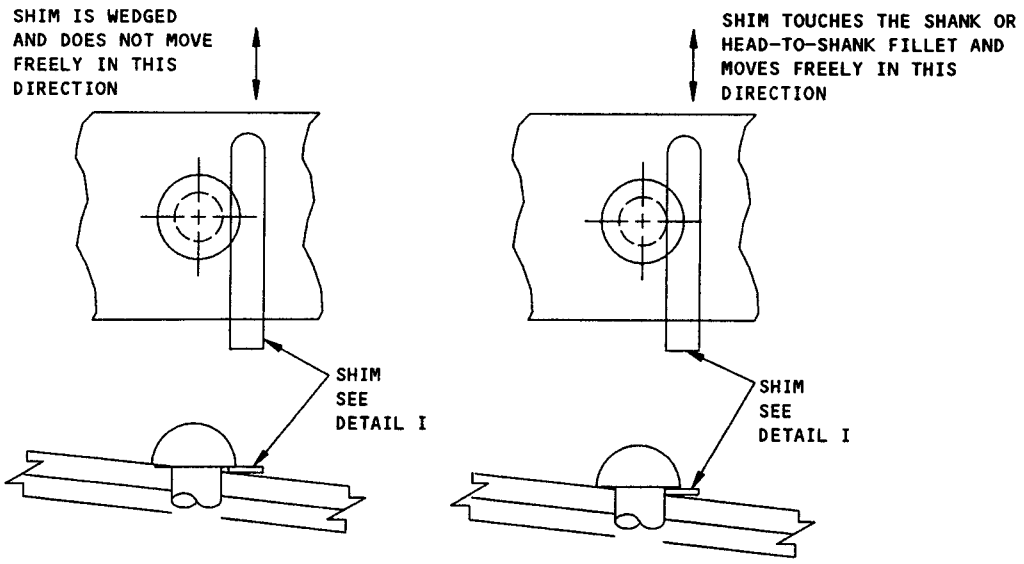

PROTRUDING HEAD GAP INSPECTION METHOD
DETAIL II

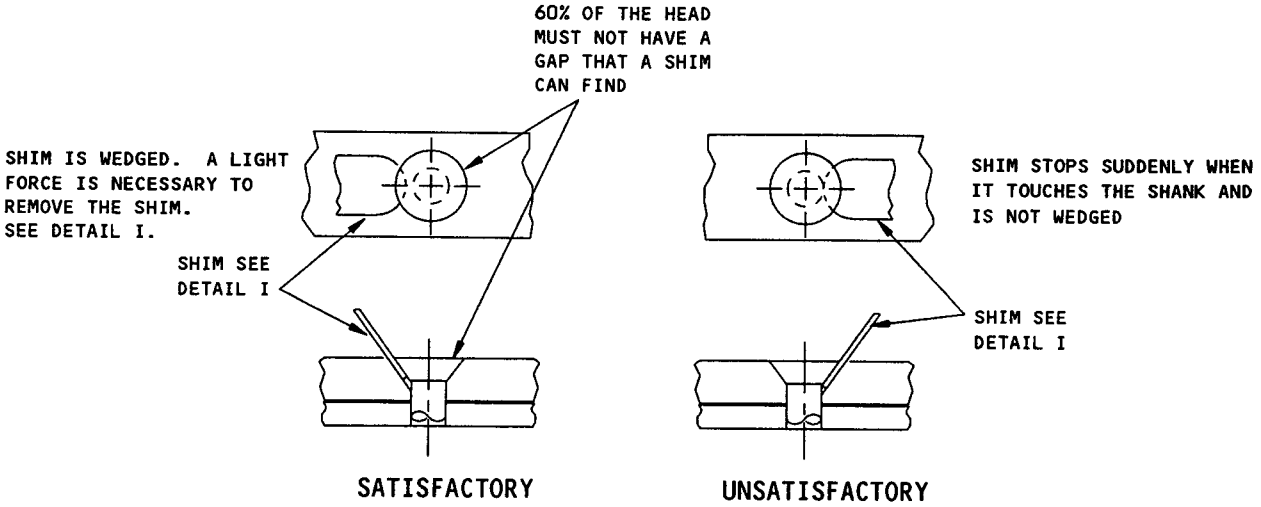

GAP INSPECTION METHOD FOR FLUSH HEAD NON-FLUID-TIGHT RIVETS
DETAIL III

Gap Analysis for Rivet Heads and Buttons
Figure 6 (Sheet 2)

BOEING PROPRIETARY - Copyright © - Unpublished Work - See title page for details.

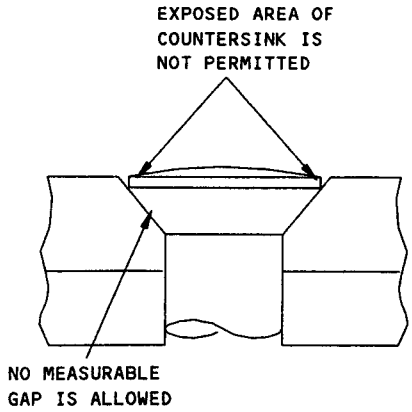

GAP INSPECTION METHOD FOR
FLUSH HEAD FLUID-TIGHT RIVETS
DETAIL IV

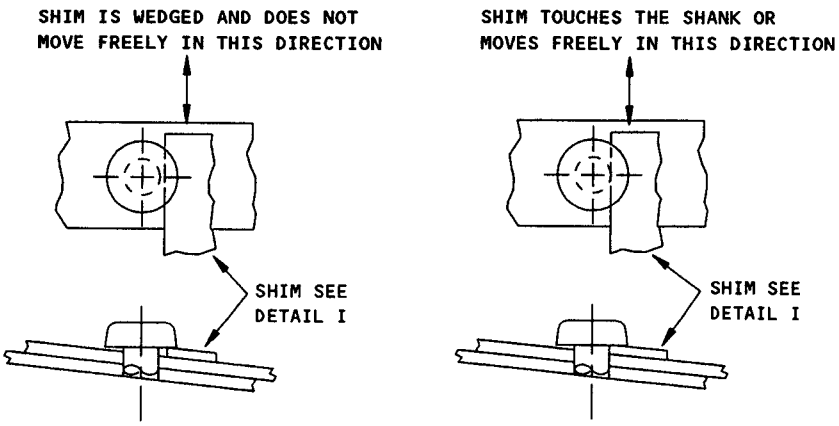

SATISFACTORY UNSATISFACTORY

GAP INSPECTION METHOD FOR NON-FLUSH DRIVEN BUTTONS (ALL RIVETS)
DETAIL V

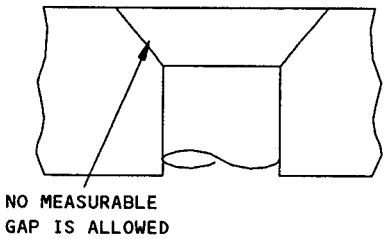

GAP INSPECTION METHOD FOR
FLUSH DRIVEN BUTTONS (ALL RIVETS)
DETAIL VI

Gap Analysis for Rivet Heads and Buttons
Figure 6 (Sheet 3)

BOEING PROPRIETARY - Copyright © - Unpublished Work - See title page for details.

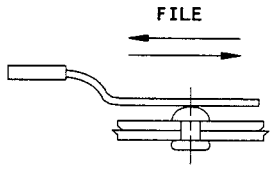

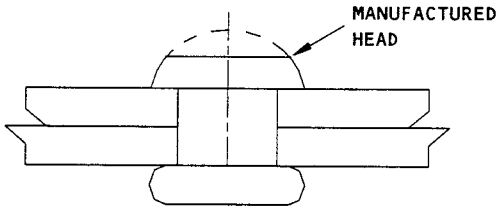

STEP NO. 1

FILE A FLAT AREA ON THE MANUFACTURED HEAD WITH A FILE

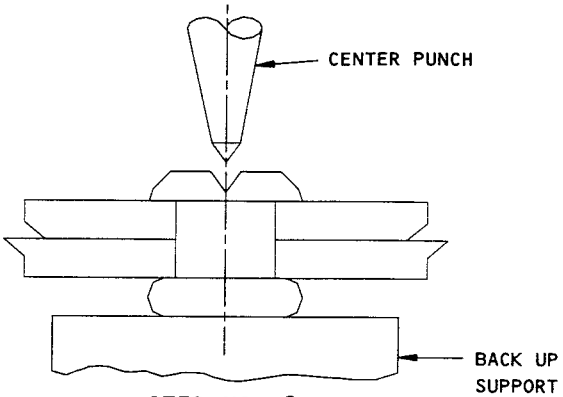

STEP NO. 2

CENTER PUNCH THE CENTER OF THE MANUFACTURED HEAD. FOR BOTH FLUSH AND NON-FLUSH RIVETS USE A BLOCK OF WOOD OR A BUCKING BAR AS A BACKUP SUPPORT

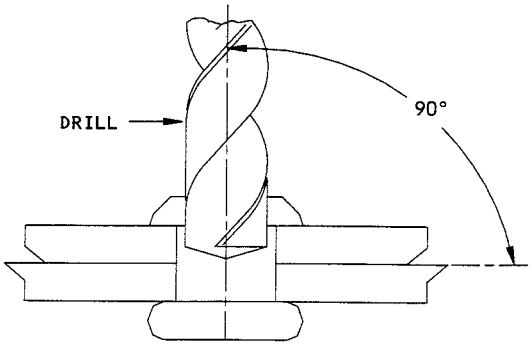

STEP NO. 3

CAUTION: TO PREVENT CRACKED DIMPLES OR DAMAGED UNDERSTRUCTURE, WHEN REMOVING RIVETS FROM DIMPLED HOLES, DRILL A HOLE INTO THE RIVET SHANK BEFORE DRIVING IT OUT

DRILL THROUGH THE HEAD OF THE RIVET SO THAT THE DRILL DOES NOT DAMAGE THE SKIN OR CUT THE SIDES OF THE RIVET HOLE.

NOTE: START THE DRILL BY HAND. USE A DRILL BIT 1/32 INCH DIAMETER SMALLER THAN THE RIVET SHANK.

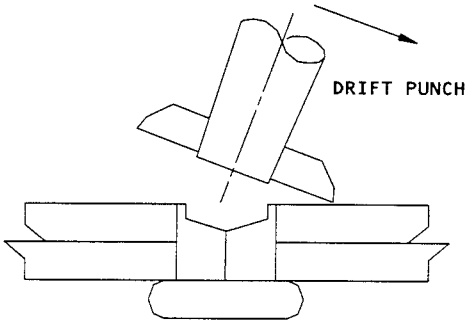

STEP NO. 4

INSERT A DRIFT PUNCH INTO THE HOLE DRILLED IN THE RIVET AND TILT THE PUNCH TO BREAK OFF THE RIVET HEAD

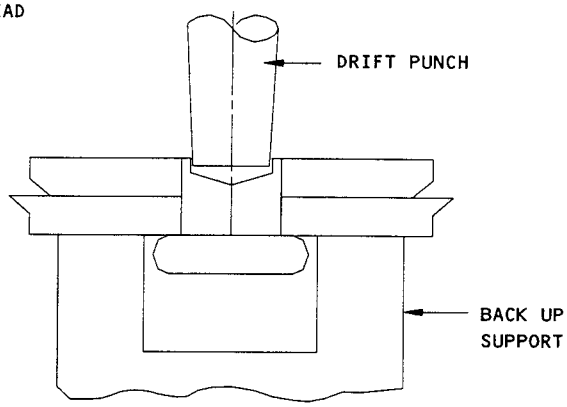

STEP NO. 5

DRIVE OUT THE RIVET SHANK WITH A DRIFT PUNCH AND HAMMER. USE A BLOCK OF WOOD OR A BUCKING BAR AS A BACKUP SUPPORT.

REMOVAL OF PROTRUDING HEAD RIVETS
DETAIL I

Removal of Solid Shank Rivets
Figure 7

BOEING PROPRIETARY - Copyright © - Unpublished Work - See title page for details.

NOMINAL RIVET DIA	A	B	C	
1/8	+0.020	+0.015	+0.020	-0.010
5/32	+0.020	+0.020	+0.020	-0.010
3/16	+0.020	+0.025	+0.020	-0.010
1/4	+0.020	+0.030	+0.020	-0.010

STEM AND COLLAR PROTRUSION LIMITS FOR NAS1398, NAS1399, NAS1738, AND NAS1739 BLIND RIVETS
TABLE I [A]

NOMINAL BOLT DIA	A	B	C
5/32	±0.017	-	±0.010
3/16	±0.022	-	±0.012
1/4	±0.029	-	±0.015
5/16	±0.037	-	±0.019
3/8	±0.045	-	±0.023
7/16	±0.050	-	±0.027
1/2	±0.056	-	±0.031

STEM AND COLLAR PROTRUSION LIMITS FOR MS21140, MS21141, MS90353, AND MS90354 BLIND BOLTS
TABLE II [A]

NOMINAL RIVET DIAMETER INCH	A	B	C	
1/8	+0.005	---	+0.010	-0.015
5/32	+0.005	---	+0.010	-0.020
3/16	+0.005	---	+0.010	-0.020

STEM AND COLLAR PROTRUSION LIMITS FOR BACR15FP AND BACR15FR BLIND RIVETS
TABLE III [A] [B]

NOTES

- THE SOURCE OF INFORMATION FOR THIS FIGURE CAN BE FOUND IN BOEING PROCESS SPECIFICATION BAC5004-3
- SEE DETAILS IV AND V FOR GAP ANALYSIS

[A] SEE DETAILS I AND II FOR VALUES THAT FOLLOW:

- A = MAXIMUM ALLOWABLE DISTANCE OF LOCKING COLLAR ABOVE (+) OR BELOW (-) FASTENER HEAD
- B = MAXIMUM ALLOWABLE DISTANCE OF LOCKING COLLAR ABOVE TOP OF LAND ON STEM
- C = MAXIMUM ALLOWABLE DISTANCE OF TOP OF LAND ON STEM ABOVE (+) OR BELOW (-) FASTENER HEAD

[B] SEE DETAIL III FOR THE LOCKRING FLASH POSITION

[C] EVALUATE GAPS AS FOLLOWS:

A. THE HEADS OF ALL PROTRUDING-HEAD FASTENERS MUST SEAT SO THAT A 0.003-INCH THICK SHIM DOES NOT CONTACT THE FASTENER SHANK WHEN INSPECTED AS SHOWN IN DETAIL V. CONTACT WITH THE SHANK IS INDICATED WHEN THE SHIM DOES NOT WEDGE AND WILL SLIDE FREELY UNDER THE HEAD AS SHOWN IN DETAIL V. THE HEADS OF PROTRUDING-HEAD BLIND BOLTS MUST SEAT IN AT LEAST ONE LOCATION ON THE PERIPHERY OF THE HEAD AND THE REMAINING GAP SHALL BE IN ACCORDANCE WITH DETAIL V USING THE SHIM THICKNESS SHOWN IN TABLE IV.

B. THE HEADS OF ALL FLUSH-HEAD FASTENERS MUST SEAT SO THAT:

(1) A 0.003-INCH THICK SHIM CANNOT BE INSERTED BETWEEN THE FASTENER HEAD AND THE COUNTERSINK FOR MORE THAN 40 PERCENT OF THE CIRCUMFERENCE OF THE HEAD.

(2) A 0.003-INCH THICK SHIM DOES NOT CONTACT THE FASTENER SHANK WHEN INSPECTED AS SHOWN IN DETAIL VI.

Installation of Blind Bolts and Blind Rivets
Figure 8 (Sheet 1)

BOEING PROPRIETARY - Copyright © - Unpublished Work - See title page for details.

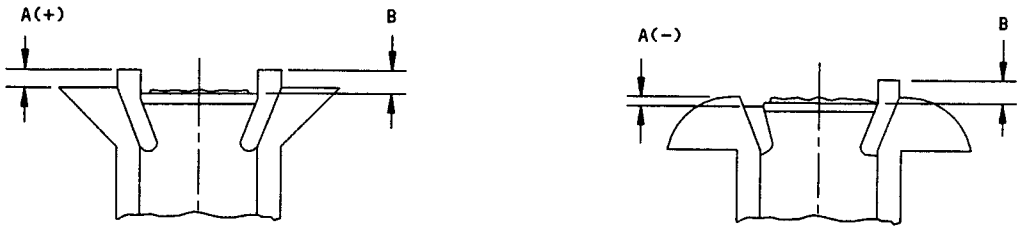

LOCKING COLLAR PROTRUSION LIMITS
DETAIL I

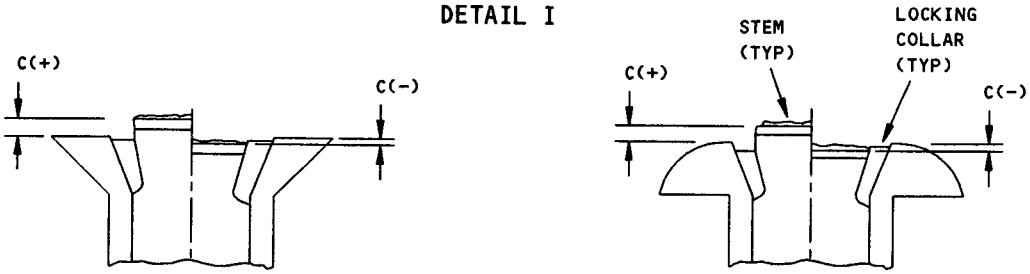

STEM PROTRUSION LIMITS
DETAIL II

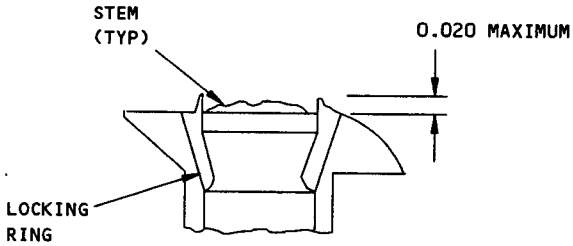

LOCKING RING FLASH POSITION (BACR15FP AND BACR15FR)
DETAIL III

Installation of Blind Bolts and Blind Rivets
Figure 8 (Sheet 2)

BOEING PROPRIETARY - Copyright © - Unpublished Work - See title page for details.

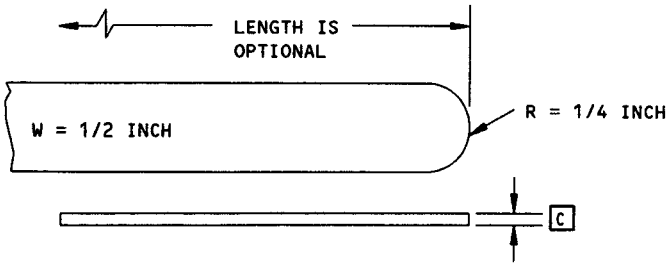

GAP INSPECTION SHIM
DETAIL IV

NOMINAL FASTENER DIAMETER (INCH)	SHIM THICKNESS T + 0.0005 - 0.0000
5/32	0.004
3/16	0.005
1/4	0.006
5/16	0.007
3/8	0.008
7/16	0.009
1/2	0.010

SHIM THICKNESS FOR BLIND BOLTS
TABLE IV

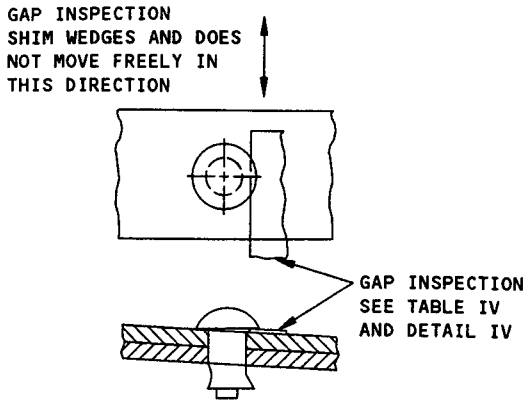

SATISFACTORY

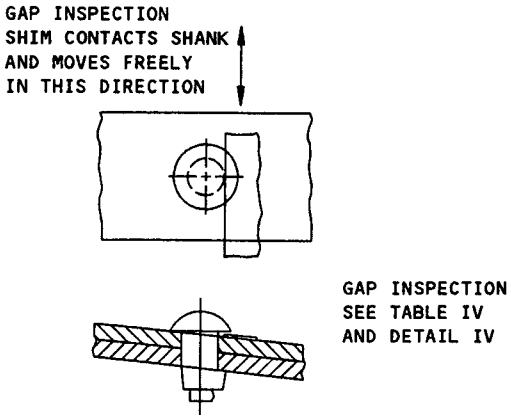

UNSATISFACTORY

GAP ANALYSIS FOR PROTRUDING HEAD FASTENERS
DETAIL V

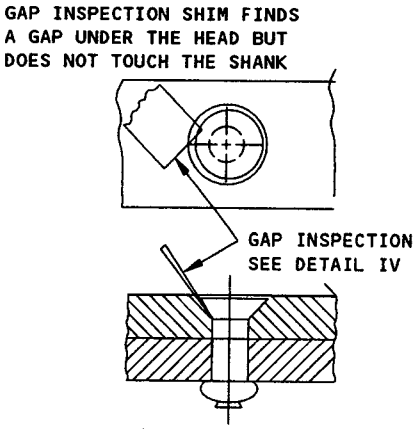

SATISFACTORY

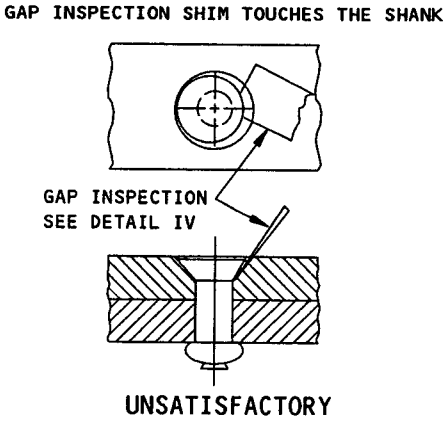

UNSATISFACTORY

GAP ANALYSIS FOR FLUSH HEAD FASTENERS
DETAIL VI

Installation of Blind Bolts and Blind Rivets
Figure 8 (Sheet 3)

BOEING PROPRIETARY - Copyright © - Unpublished Work - See title page for details.

BLIND RIVET REMOVAL INSTRUCTIONS

1. For fasteners installed in thick material, remove the lock by driving out the rivet stem with a tapered steel drift pin. Refer to Detail I.

   NOTE: If the rivets were installed in thin sheets, driving out the locked stem may cause damage to the sheets. The recommended procedure is to use a small drill as a guide for a larger drill on top of the rivet stem, and the tapered portion of the stem to drill and destroy the lock.

2. Pry the rest of the locking collar out of the rivet head with the drift pin. Refer to Detail II.

CAUTION: DO NOT DRILL COMPLETELY THROUGH THE RIVET SLEEVE TO REMOVE THE RIVET. IF YOU DO, DAMAGE WILL OCCUR FROM AN ENLARGED HOLE.

3. Drill (nearly completely) through the head of the rivet with a drill that is the same size as the rivet shank. Refer to Detail III.

4. Break off the rivet head. Use the drift pin as a pry tool. Refer to Detail IV.

5. Drive out the rivet shank that remains with a pin that has the same diameter as the rivet shank. Refer to Detail V.

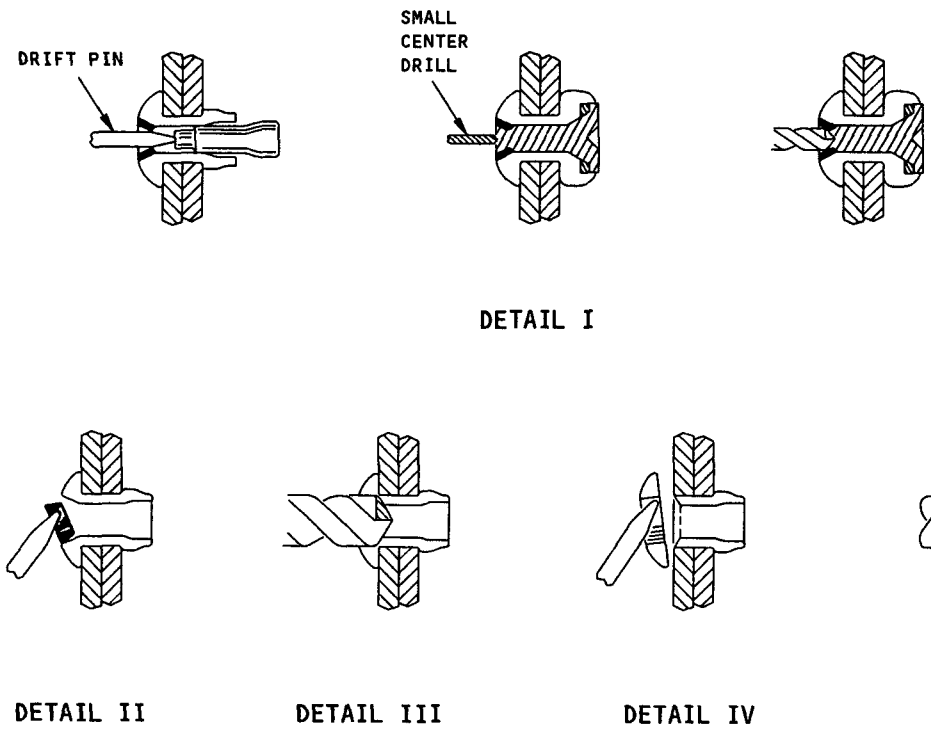

Removal of Blind Rivets
Figure 9

BOEING PROPRIETARY - Copyright © - Unpublished Work - See title page for details.

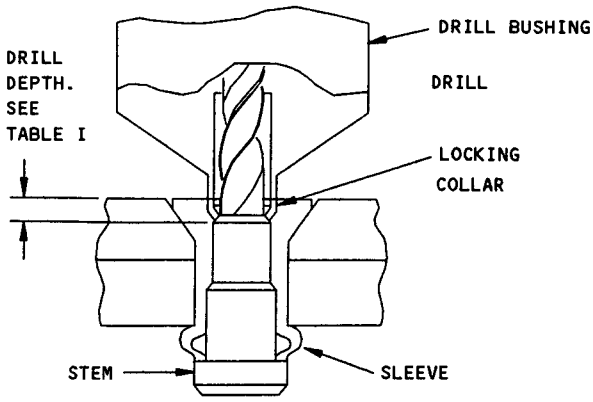

STEP NO. 1

PLACE DRILL BUSHING SQUARELY ON THE LOCKING COLLAR AND DRILL THE STEM TO THE DEPTH SHOWN IN TABLE I

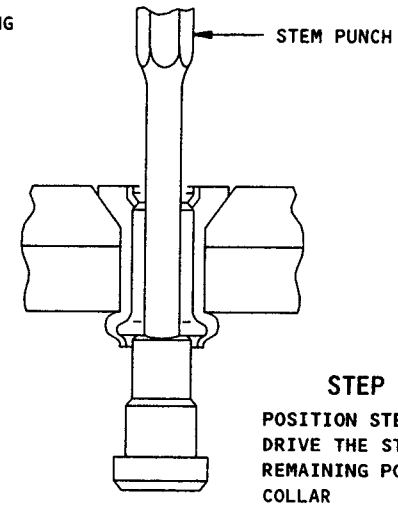

STEP NO. 2

POSITION STEM PUNCH AND DRIVE THE STEM OUT. REMOVE REMAINING PORTION OF LOCKING COLLAR

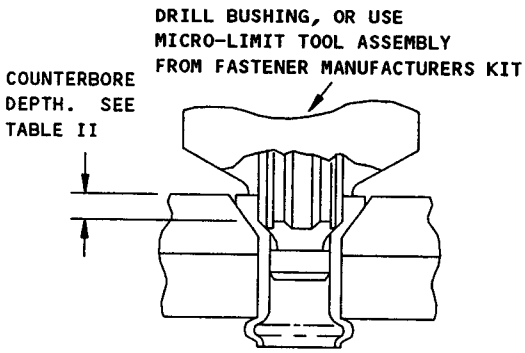

STEP NO. 3

COUNTERBORE SLEEVE TO THE DEPTH SHOWN IN TABLE II

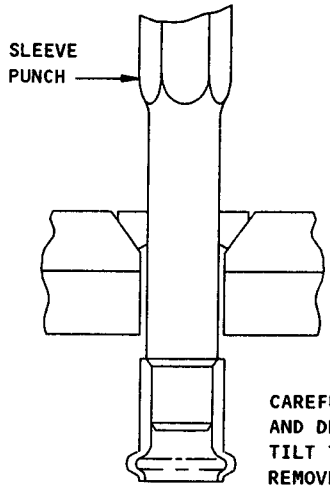

STEP NO. 4

CAREFULLY POSITION SLEEVE PUNCH AND DRIVE OUT THE SLEEVE. TILT THE PUNCH SLIGHTLY AND REMOVE FASTENER HEAD.

NOTE: WHEN USING DRILL BUSHING, ENSURE THAT CONCENTRICITY IS MAINTAINED WITH DIAMETER OF BOLT

NOMINAL BOLT DIA	DRILL DEPTH
5/32	0.070/0.050
3/16	0.090/0.070
1/4	0.110/0.090
5/16	0.130/0.110
3/8	0.150/0.130

TABLE I

NOMINAL BOLT DIA	COUNTERBORE DEPTH	
	PROTRUDING HEAD	FLUSH HEAD
5/32	0.065/0.055	0.067/0.057
3/16	0.130/0.120	0.075/0.065
1/4	0.135/0.125	0.100/0.090
5/16	0.136/0.126	0.132/0.122
3/8	0.200/0.190	0.160/0.150

TABLE II

Removal of Blind Bolts
Figure 10

BOEING PROPRIETARY - Copyright © - Unpublished Work - See title page for details.

NOTES

- THE SOURCE OF INFORMATION FOR THIS FIGURE CAN BE FOUND IN BOEING PROCESS SPECIFICATION BAC5004-2.
- SEE DETAIL I FOR LOCKBOLT INSTALLATION.
- SEE DETAILS II AND III FOR HEX-DRIVE BOLT INSTALLATION.
- PULL-TYPE, SHEAR, LIGHTWEIGHT TITANIUM LOCKBOLTS MUST BE INSTALLED WITH TOOLS THAT ARE FITTED WITH SWAGE DIES AS SHOWN IN TABLE I AND DETAIL IV (OR EQUIVALENT TOOLS).
- SEE TABLE II AND DETAIL V FOR HEAD DISHING SPECIFICATIONS.
- SEE TABLE III AND DETAILS VI AND VII FOR GAP ANALYSIS.
- REFER TO FIGURE 12 FOR WASHER INSTALLATION.
- REFER TO FIGURE 13 FOR PIN PROTRUSION AND COLLAR LIMITS.
- COLLARS WITH SELF RETAINING FEATURES (FOR EXAMPLE: BACC30BK()R AND BACC30BF()R MUST BE POINTED SO THAT THE RETAINING FEATURE POINTS AWAY FROM THE STRUCTURE. DO NOT USE THESE COLLARS INSIDE OF FUEL TANKS.
- PULL-TYPE SHEAR AND TENSION STANDARD LOCKBOLTS MUST BE INSTALLED WITH PULL TOOLS FITTED WITH SWAGE DIES HAVING ST10-1027G, (OR EQUIVALENT), CAVITY CONFIGURATION.

[A] TYPICAL COLLARS ARE NOT SYMMETRICAL AND MUST BE INSTALLED AS SHOWN IN DETAIL I. IF THE COLLAR IS SYMMETRICAL IN SHAPE, IT WILL NOT BE IMPORTANT WHICH END IS AGAINST THE STRUCTURE. EXAMPLES OF SYMMETRICAL COLLARS ARE: BACC30BE, BACC30BF, BACC30L, BACC30K, BACC30BK, NAS1080C04, NAS1080C05, NAS1080E04, NAS1080E05, NAS1080MG04, NAS1080MG05, AND NAS1080K

Lockbolt and Hex-Drive Bolt Installation
Figure 11 (Sheet 1)

BOEING PROPRIETARY - Copyright © - Unpublished Work - See title page for details.

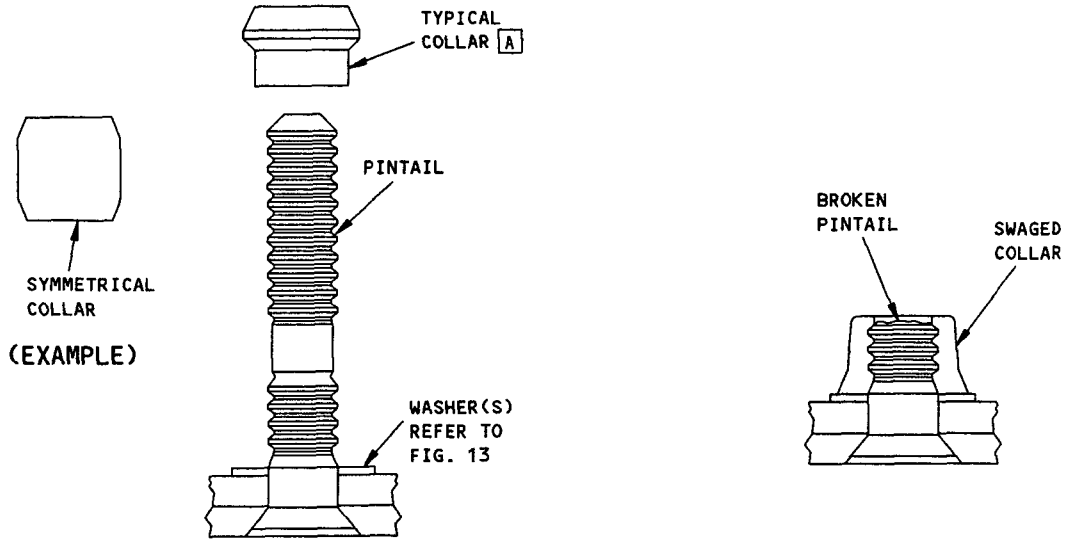

PULL TYPE
BEFORE INSTALLATION

PULL TYPE
AFTER INSTALLATION

LOCKBOLT INSTALLATION

DETAIL I

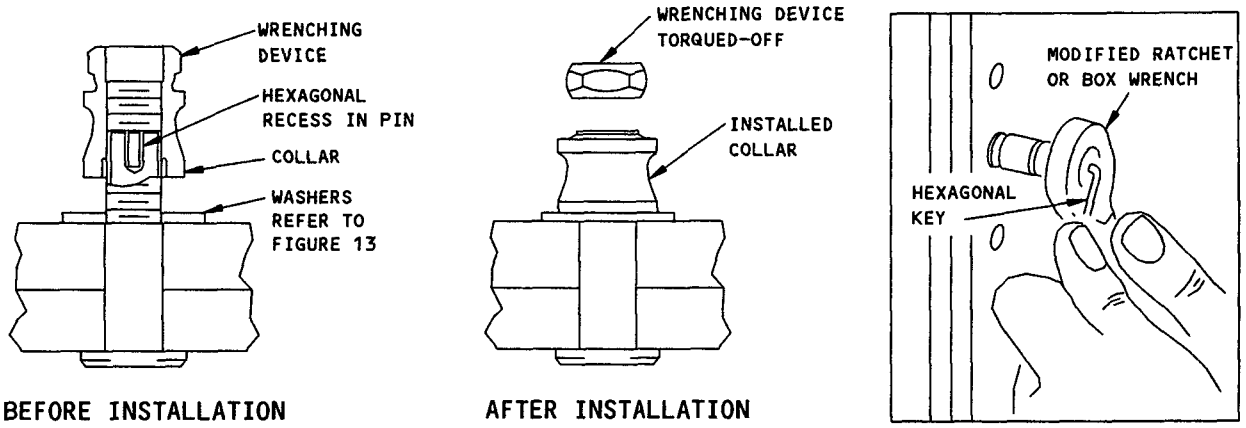

BEFORE INSTALLATION

AFTER INSTALLATION

HEX-DRIVE BOLT INSTALLATION

DETAIL II

Lockbolt and Hex-Drive Bolt Installation
Figure 11 (Sheet 2)

BOEING PROPRIETARY - Copyright © - Unpublished Work - See title page for details.

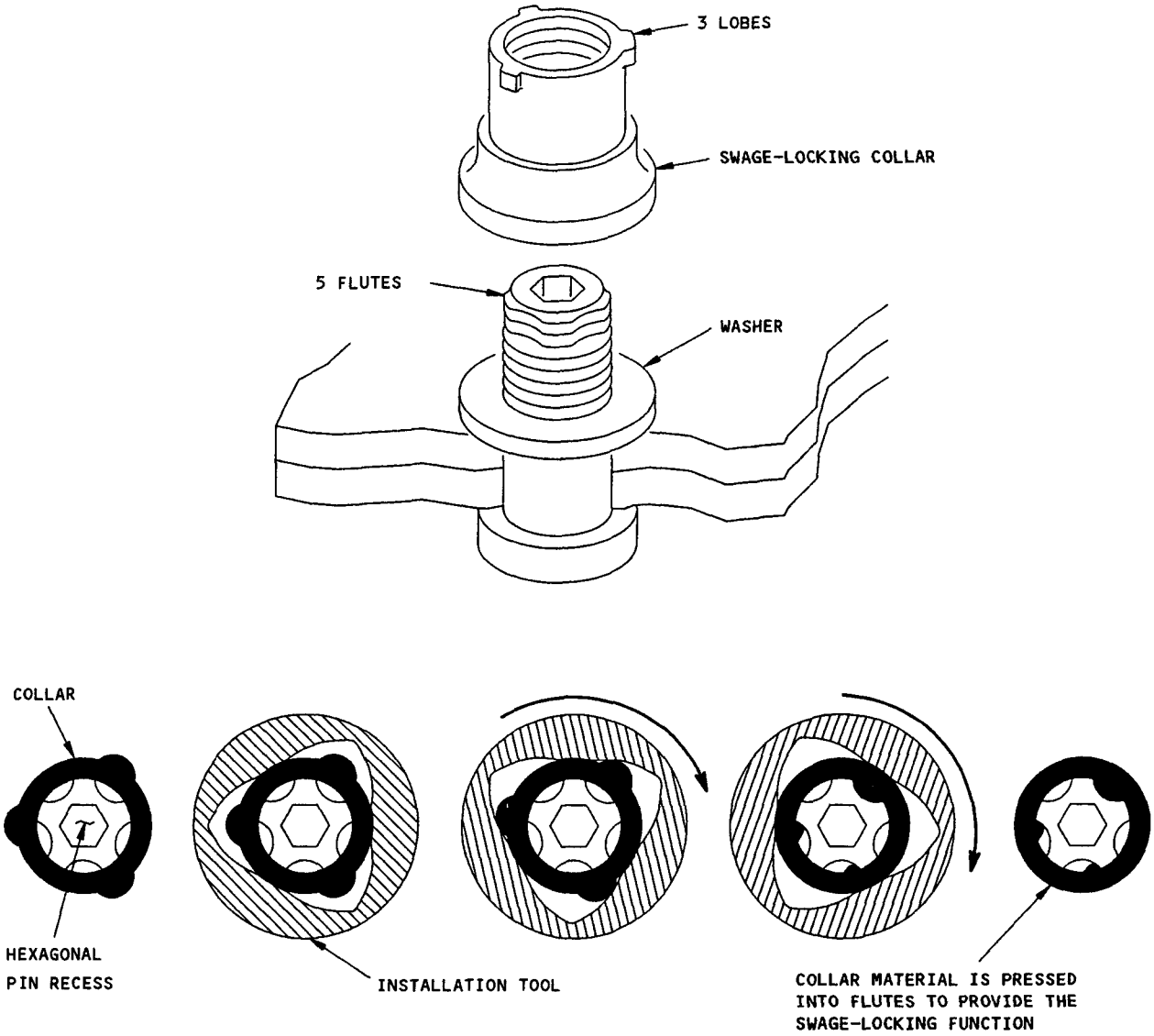

INSTALLATION WITH SWAGE-LOCKING COLLAR AND
SWAGE-LOCKING (FLUTED SHANK) BOLT
DETAIL III

Lockbolt and Hex-Drive Bolt Installation
Figure 11 (Sheet 3)

BOEING PROPRIETARY - Copyright © - Unpublished Work - See title page for details.

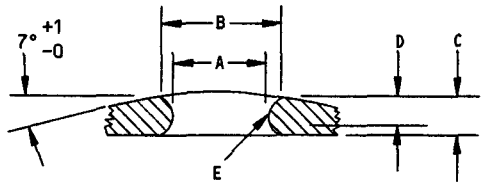

LIGHTWEIGHT LOCKBOLT SWAGE DIE DIMENSIONS
DETAIL IV

NOMINAL DIAMETER	A +0.0010 -0.0000	B +0.0030 -0.0000	C +0.0015 -0.0005	D REFERENCE	E +0.0010 -0.0000 RADIUS
5/32	0.2219	0.2580	0.103	0.0661	0.121
3/16	0.2450	0.2813	0.120	0.0670	0.130
1/4	0.3241	0.3722	0.157	0.0928	0.188
5/16	0.4062	0.4667	0.195	0.1201	0.250
3/8	0.4797	0.5525	0.233	0.1469	0.311

LIGHTWEIGHT LOCKBOLT SWAGE DIE DIMENSIONS (INCH)
TABLE I

Lockbolt and Hex-Drive Bolt Installation
Figure 11 (Sheet 4)

BOEING PROPRIETARY - Copyright © - Unpublished Work - See title page for details.

FASTENER TYPE	FASTENER MATERIAL	NOMINAL DIAMETER	D (MAX)
PULL TYPE SHEAR HEAD LOCKBOLTS	ALUMINUM AND ALLOY STEEL	3/16	0.012
		1/4	0.012
		5/16	0.010
		3/8 AND LARGER	0.007
	A286 CRES	ALL	0.008
PULL-TYPE TENSION HEAD LOCKBOLTS	TITANIUM	ALL	0.004
ALL OTHERS	ALL	ALL	0.004

TABLE II

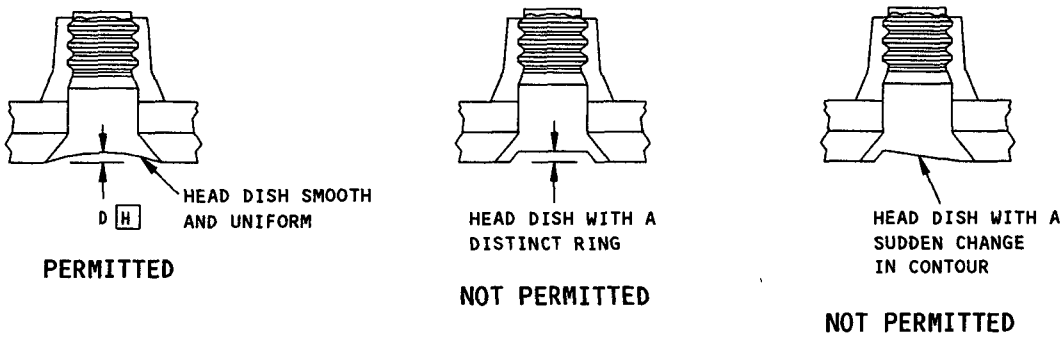

HEAD DISHING LIMITATIONS FOR FLUSH HEAD LOCKBOLTS
AND HEX-DRIVE BOLTS
DETAIL V

Lockbolt and Hex-drive Bolt Installation
Figure 11 (Sheet 5)

BOEING PROPRIETARY - Copyright © - Unpublished Work - See title page for details.

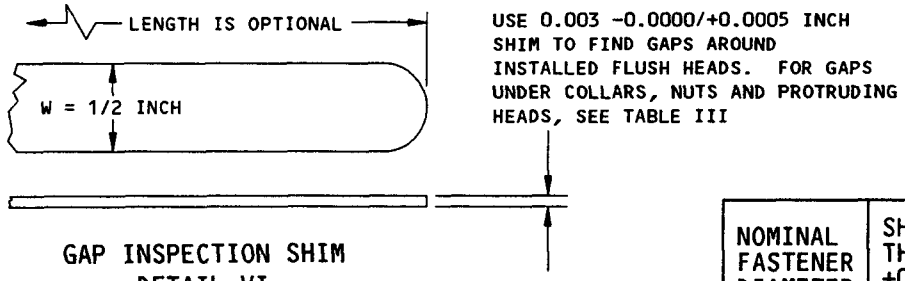

GAP INSPECTION SHIM
DETAIL VI

NOMINAL FASTENER DIAMETER		SHIM THICKNESS +0.0005 -0.0000
5/32	0.164	0.004
3/16	0.190	0.005
1/4	0.250	0.006
5/16	0.313	0.007
3/8	0.375	0.008
7/16	0.438	0.009
1/2	0.500	0.010
9/16	0.563	0.011
5/8	0.625	0.013
3/4	0.750	0.015
7/8	0.875	0.017
1	1.000	0.019

SHIM STOCK SIZE FOR COLLARS, NUTS AND PROTRUDING HEADS OF LOCKBOLTS AND HEX-DRIVE FASTENERS
TABLE III

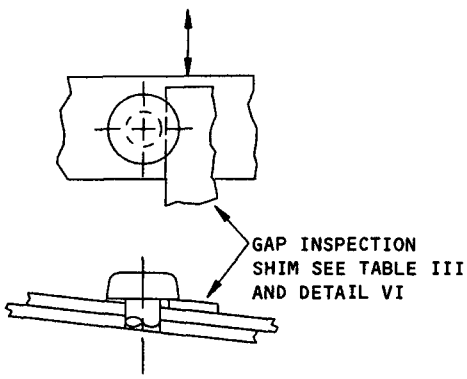

SATISFACTORY FOR HEADS, HEX-DRIVE BOLTS AND NON SELF-ALIGNING NUTS AND COLLARS

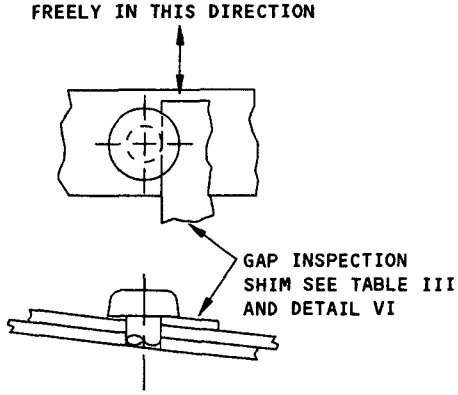

NOT SATISFACTORY FOR HEADS, NUTS, AND COLLARS

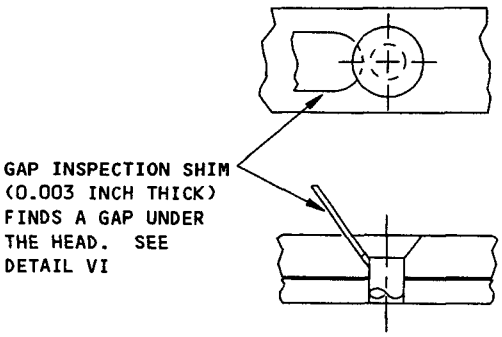

UNSATISFACTORY

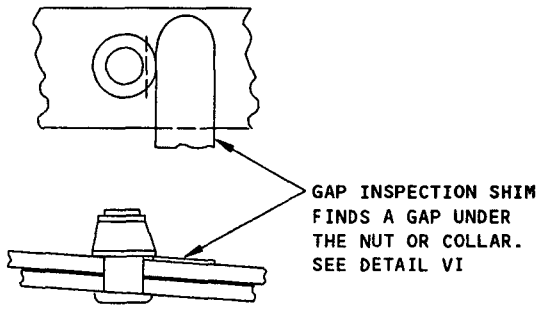

UNSATISFACTORY FOR LOCKBOLTS AND SELF-ALIGNING NUTS AND COLLARS FOR HEX-DRIVE BOLTS

GAP ANALYSIS FOR LOCKBOLTS AND HEX-DRIVE BOLTS
DETAIL VII

Lockbolt and Hex-drive Bolt Installation
Figure 11 (Sheet 6)

BOEING PROPRIETARY - Copyright © - Unpublished Work - See title page for details.

NOTES

- THE SOURCE OF INFORMATION FOR THIS FIGURE CAN BE FOUND IN BOEING PROCESS SPECIFICATION BAC5004-2
- SEE DETAILS I AND II FOR WASHER LIMITATIONS

[A] SEE TABLE I FOR THE CORRECT WASHER MATERIAL. SEE TABLE II FOR WASHER PART NUMBERS.

[B] DO NOT USE MORE THAN TWO WASHERS UNDER A LOCKBOLT COLLAR. (THIS INCLUDES THE CORROSION PROTECTION WASHER). SEE DETAILS III AND IV FOR ADDITIONAL INFORMATION ON WASHERS USED WITH LOCKNUTS AND HEX-DRIVE BOLTS.

[C] ALUMINUM WASHERS MUST BE ALODINE COATED AS GIVEN IN SRM 51-10-2.

[D] LOCATE CORROSION PROTECTION WASHER NEXT TO STRUCTURE WHEN A SECOND WASHER IS USED FOR GRIP ADJUSTMENT (EXCEPT AS NOTED)

[E] LOCATE GRIP ADJUSTMENT WASHER NEXT TO COLLAR WHEN USED WITH A CORROSION PROTECTION WASHER

[F] USE AN UNPLATED CRES WASHER NEXT TO STRUCTURE AND A CAD PLATED CRES WASHER NEXT TO COLLAR

[G] A MAXIMUM OF TWO WASHERS IS ALLOWED UNDER COLLAR

[H] FOR MAXIMUM HEAD DISHING (D) ALLOWED SEE TABLE II

[I] 5052 ALUMINUM WASHER IS MANDATORY UNDER PROTRUDING FASTENER HEAD IF HEAD END BEARS ON MAGNESIUM.

[J] CAD PLATED WASHER MUST NOT COME IN CONTACT WITH THE TITANIUM STRUCTURE. IT IS TO BE USED BETWEEN THE CRES UNPLATED WASHER AND THE ALUMINUM COLLAR OR NUT.

[K] DO NOT USE ALUMINUM WASHERS WITH NON-ALUMINUM TENSION FASTENERS. EXAMPLE: BACB30NX/NY BOLTS WITH BACC30BH OR BACC30X COLLARS

Washers with Lockbolts and Hex-Drive Bolts
Figure 12 (Sheet 1)

BOEING PROPRIETARY - Copyright © - Unpublished Work - See title page for details.

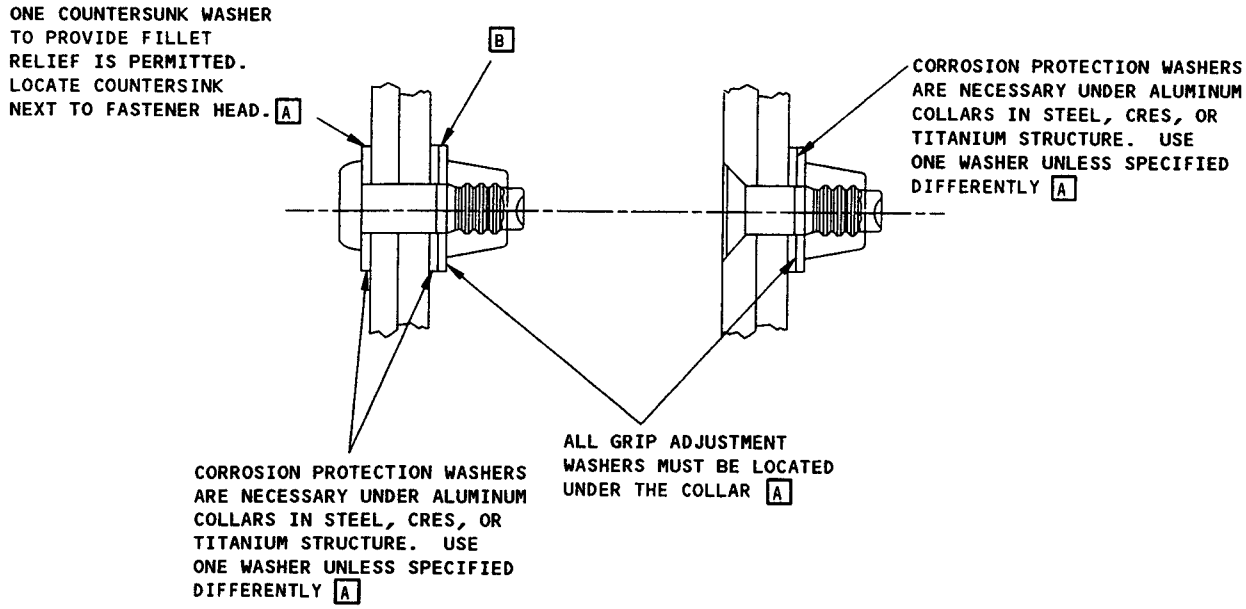

WASHER LIMITATIONS FOR STEEL, ALUMINUM, AND TITANIUM STRUCTURES
DETAIL I

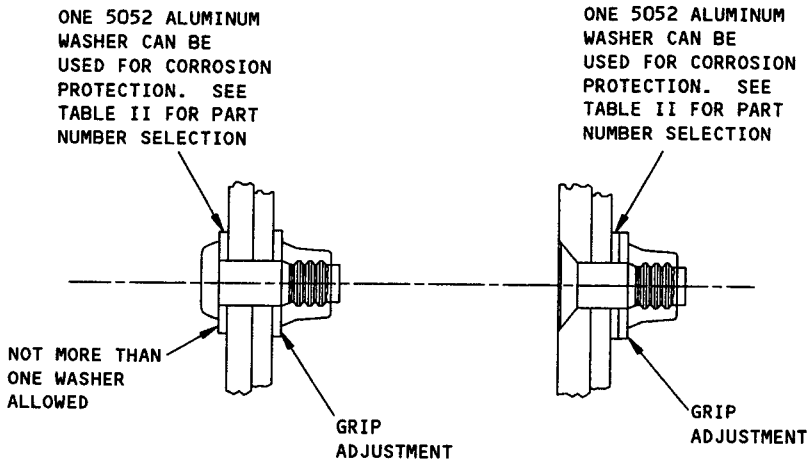

WASHER LIMITATIONS FOR MAGNESIUM STRUCTURES
DETAIL II

Washers with Lockbolts and Hex-drive Bolts
Figure 12 (Sheet 2)

BOEING PROPRIETARY - Copyright © - Unpublished Work - See title page for details.

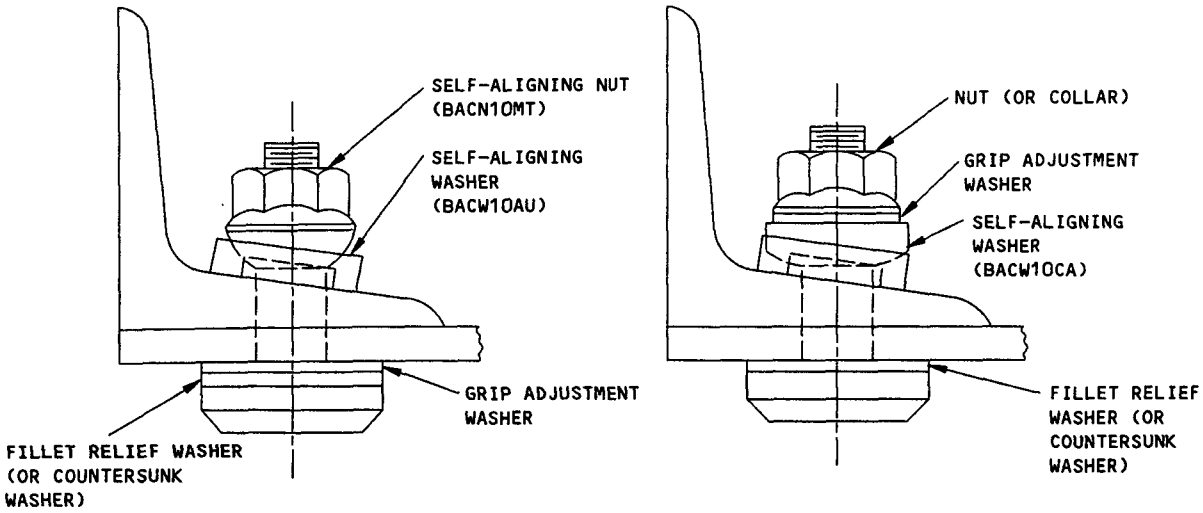

USE OF WASHERS WITH SELF-ALIGNING NUTS AND SELF-ALIGNING WASHERS
DETAIL III

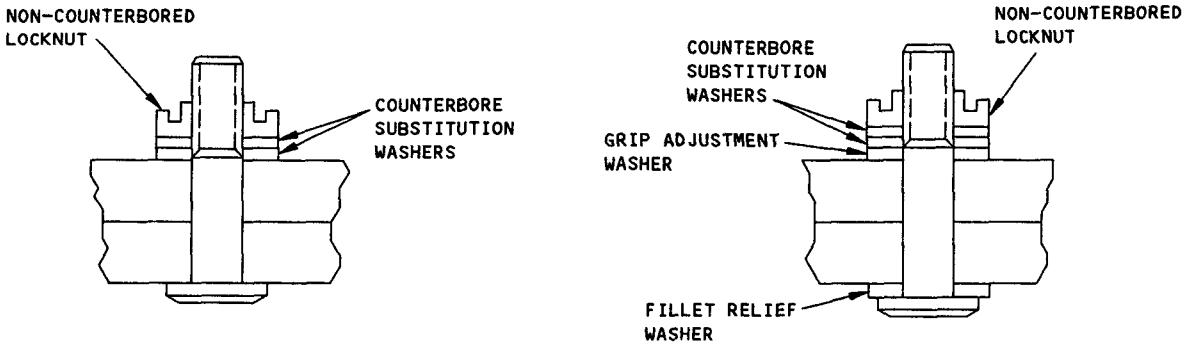

USE OF COUNTERBORE SUBSTITUTION WASHERS
DETAIL IV

Washers with Lockbolts and Hex-Drive Bolts
Figure 12 (Sheet 3)

BOEING PROPRIETARY - Copyright © - Unpublished Work - See title page for details.

COLLAR MATERIAL	STRUCTURE MATERIAL	CORROSION PROTECTION WASHER MATERIAL [D] [G] (MANDATORY)	COUNTERBORE SUBSTITUTION OR GRIP ADJUSTMENT WASHER MATERIAL [E] [G]	FILLET RELIEF WASHER (LOCATE NEXT TO STRUCTURE)	SELF-ALIGNING WASHER (LOCATE NEXT TO STRUCTURE)
ALUMINUM	ALUMINUM	NONE	2024 AL [C] OR CAD PLATED CRES	2024 OR 7075	CAD PLATED CRES
	STEEL	CAD PLATED CRES	2024 AL [C] OR CAD PLATED CRES	CAD PLATED CRES	CAD PLATED CRES
	CRES	CAD PLATED CRES	2024 AL [C] OR CAD PLATED CRES	UNPLATED CRES	CAD PLATED CRES [J]
	TITANIUM	[F] [J]	2024 AL [C] OR CAD PLATED CRES	UNPLATED CRES	CAD PLATED CRES [J]
	MAGNESIUM	5052 AL [I]	2024 AL [C]	5052 AL [I]	---
CAD PLATED STEEL, CAD PLATED CRES, OR CAD PLATED NICKEL-COPPER ALLOY	ALUMINUM	NONE	2024 AL [C] OR CAD PLATED CRES	2024 OR 7075 AL OR CAD PLATED CRES	CAD PLATED CRES
	STEEL	NONE	UNPLATED CRES	UNPLATED CRES	CAD PLATED CRES
	CRES	NONE	UNPLATED CRES	UNPLATED CRES	CAD PLATED CRES
	TITANIUM	UNPLATED CRES	UNPLATED CRES	UNPLATED CRES	---
	MAGNESIUM	5052 AL [I]	2024 AL [C] OR CAD PLATED CRES	5052 AL [I]	---
UNPLATED CRES OR UNPLATED NICKEL-COPPER ALLOY	ALUMINUM	CAD PLATED CRES	CAD PLATED CRES	2024 OR 7075 AL OR CAD PLATED CRES	CAD PLATED CRES
	STEEL	CAD PLATED CRES	CAD PLATED CRES	CAD PLATED CRES	CAD PLATED CRES
	CRES	NONE	UNPLATED CRES	UNPLATED CRES	UNPLATED CRES
	TITANIUM	NONE	UNPLATED CRES	UNPLATED CRES	UNPLATED CRES
	MAGNESIUM	5052 AL [I]	CAD PLATED CRES	5052 AL [I]	---

WASHER MATERIAL
TABLE I

Washers with Lockbolts and Hex-Drive Bolts
Figure 12 (Sheet 4)

BOEING PROPRIETARY - Copyright © - Unpublished Work - See title page for details.

PLAIN WASHER MATERIAL	WASHER PART NUMBERS (REF)			
	NOMINAL	0.0156 O.S.	0.0312 O.S.	0.0466 O.S.
STEEL OR CRES CAD PLATED	NAS1149E()P BACW10BN()SP	BACW10BP()1DP BACW10BP()1DPN	BACW10BP()2DP BACW10BP()2DPU	USE NEXT LARGER STANDARD SIZE
2024 ALUMINUM	BACW10BN()AP NAS1149D()J	BACW10AW()AS BACW10AW()AST BACW10BN()1AP	BACW10AW()AS BACW10()AST BACW10BN()2AP	BACW10AW30()AS BACW30AW30()AST
5052 ALUMINUM	BACW10BN()ANP NAS620A() NAS1197-()	BACW10AW()AN BACW10AW()ANT BACW10BN()1ANP	BAC10AW10()AN BACW10AW10()ANT BACW10BN()2ANP	BACW10AW30()AN BACW10AW30()ANT
CRES UNPLATED	BACW10BN()UP BACW10BP()APU BACW10BP()PTU NAS620C() NAS1149E()R	BACW10BP()1APU BACW10BP()1PTU	BACW10BP()2APU BACW10BP()2PTU	USE NEXT LARGER STANDARD SIZE.

COUNTERSUNK WASHER MATERIAL	WASHER PART NUMBERS (REF)			
	NOMINAL	0.0156 O.S.	0.0312 O.S.	0.0466 O.S.
STEEL OR CRES CAD PLATED	BACW10CT()C	BACW10CT()1C	BACW10CT()2C	USE NEXT LARGER STANDARD SIZE.
2024 OR 7075 ALUMINUM	BACW10CT()D BACW10CT()J	BACW10AW-C()AS BACW10CT()1J	BACW10AW-C10()AS BACW10CT()2D BACW10CT()2J	BACW10AW-C30()AS
5052 ALUMINUM	BACW10BN()ANC	BACW10AW-C()AN	BACW10AW-C10()AN	BACW10AW-C30()AN
CRES UNPLATED	BACW10CT()CU	BACW10()1CU	BACW10CT()2CU	USE NEXT LARGER STANDARD SIZE.

WASHER PART NUMBER REFERENCE [K]
TABLE II

Washers with Lockbolts and Hex-Drive Bolts
Figure 12 (Sheet 5)

L62332

BOEING PROPRIETARY - Copyright © - Unpublished Work - See title page for details.

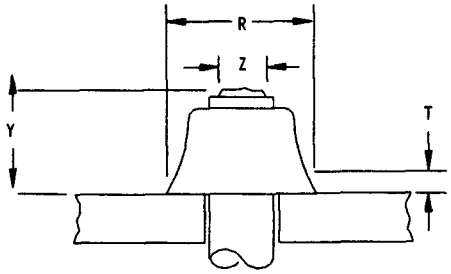

- R = SWAGED COLLAR REFERENCE DIA.
- T = MAXIMUM HEIGHT OF R DIA ABOVE SHEET OR WASHER.
- Y = PIN PROTRUSION-HEIGHT OF Z DIA ABOVE SHEET OR WASHER.
- Z = REFERENCE DIA LOCATES MEASURING POINT FOR Y.

TENSION, PULL TYPE LOCKBOLTS AND COLLARS
DETAIL I [A]

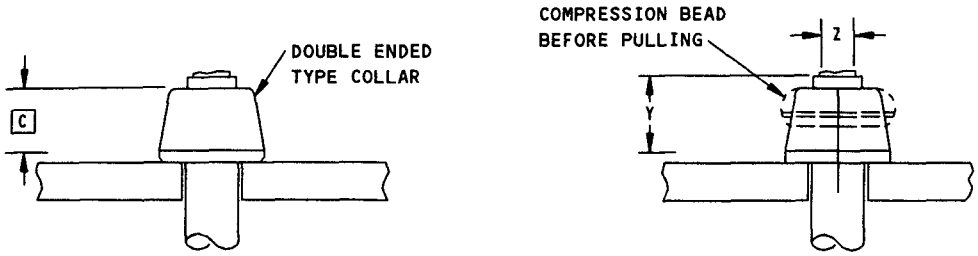

TENSION, STUMP TYPE LOCKBOLTS AND COLLARS
DETAIL II [B]

NOTES

- THE SOURCE OF INFORMATION FOR THIS FIGURE IS FOUND IN BOEING PROCESS SPECIFICATION BAC5004-2.

[A] SEE TABLE I FOR LIGHTWEIGHT LOCKBOLTS AND TABLE II FOR TENSION, PULL TYPE LOCKBOLTS.

[B] SEE TABLE III FOR SHEAR, PULL TYPE LOCKBOLTS.

[C] DOUBLE ENDED PULL TYPE SHEAR COLLARS, SUCH AS BACC30K, ARE ACCEPTABLE AS PULLED, WHEN SWAGING IS EVIDENT OVER 70% MINIMUM OF THE INSTALLED HEIGHT. ALL OTHER PULL TYPE SHEAR COLLARS ARE ACCEPTABLE WHEN ALL TRACE OF THE ORIGINAL COMPRESSION BEAD IS REMOVED AS ILLUSTRATED.

[D] SEE DETAIL IV FOR HG85-10, HG99-(), AND HG100-().

[E] BOTH ENDS OF THE GAGE MUST ACCEPT.

[F] PIN PROTRUSION IS MEASURED FROM THE STRUCTURE SURFACE WHEN COUNTERBORE SUBSTITUTION WASHERS ARE USED OR WHEN NO GRIP ADJUSTMENT WASHER IS PRESENT, AND FROM THE COLLAR/NUT SIDE SURFACE OF GRIP ADJUSTMENT WASHER(S) WHERE THESE WASHERS ARE USED.

[G] PIN PROTRUSION IS MEASURED FROM THE TOP OF SELF-ALIGNING WASHERS (EXAMPLE: BACW10CA) IF USED UNDER COLLAR OR NUT.

Pin and Collar Limits for Installed Lockbolts and Hex-Drive Bolts
Figure 13 (Sheet 1)

BOEING PROPRIETARY - Copyright © - Unpublished Work - See title page for details.

LOCKBOLT PART NO.	COLLAR PART NO.	Y		Z	R	T		GAGE NO.
		TOUCH GO	TOUCH NO GO			TOUCH GO	TOUCH NO GO	
BACB30VM5 BADB30VN5	BACC30BK5 (2024-T4)	0.131	0.237	0.124	0.234	0.039	0.112	HG110-05
BACB30VM6 BACB30VN6 BACB30XT6	BACC30BK6 (2024-T4)	0.134	0.250	0.152	0.262	0.031	0.113	HG110-06
BACB30VM8 BACB30VN8 BACB30XT8	BACC30BK8 (2024-T4)	0.193	0.301	0.209	0.344	0.058	0.139	HG110-08
BACB30VM10 BACB30VN10 BACB30XT10	BACC30BK10 (2024-T4)	0.252	0.367	0.259	0.436	0.072	0.145	HG110-10
BACB30VM12 BACB30VN12 BACB30XT12	BACC30BK12 (2024-T4)	0.304	0.419	0.322	0.512	0.103	0.172	HG110-12

LIGHTWEIGHT LOCKBOLT INSPECTION DIMENSION
TABLE I

Pin and Collar Limits for Installed Lockbolts and Hex-Drive Bolts
Figure 13 (Sheet 2)

BOEING PROPRIETARY - Copyright © - Unpublished Work - See title page for details.

LOCKBOLT PART NO.	COLLAR PART NO.	Y	Z	R	T	GAGE NO.
BACB30GP5 BACB30GQ5 NAS1525 NAS1535 (7075-T6)	NAS1080D05 (6061-T7)	0.230 0.167	0.136	0.253	0.030	HG85-7 ST8711D-5
BACB30DX5 BACB30DY5 NAS1465 NAS1475 (STEEL)	NAS1080R05 (STEEL) NAS1080-05 (2024-T4) NAS1080MG05 (NICKEL-COPPER ALLOY)	0.234 0.161	0.136	0.253	0.037	HG85-12 ST8711S-5
BACB30UA6 BACB30UB6 (TITANIUM)	BACC30BF6 (2024-T42)	0.406 0.271	0.160	0.285	0.095	HG100-06 ST8707A-06
BACB30GP6 BACB30GQ6 NAS1526 NAS1536 (7075-T6)	NAS1080D06 (6061-T7	0.280 0.208	0.164	0.303	0.039	HG85-10 ST8711H-6
BACB30DX6 BACB30DY6 BACB30GX6 NAS1466 (STEEL)	NAS1080R06 (STEEL) BACC30Q6 NAS1080-06 (2024-T4)	0.280 0.208	0.164	0.303	0.039	HG85-10 ST8711H-6

LIGHTWEIGHT LOCKBOLT INSPECTION DIMENSION
TABLE I (CONT)

Pin and Collar Limits for Installed Lockbolts and Hex-Drive Bolts
Figure 13 (Sheet 3)

BOEING PROPRIETARY - Copyright © - Unpublished Work - See title page for details.

LOCKBOLT PART NO.	COLLAR PART NO.	Y	Z	R	T	GAGE NO.
BACB30TY6 BACB30TZ6	BACC30BE6 (2024-T73)	0.343 0.228	0.160	0.285	0.094	HG99-06 ST8728B-06
BACB30AU8 (BLIND)	NONE	0.280 0.208	0.164	0.303	0.039	HG85-10 ST8711H-6
BACB30UA8 BACB30UB8 (TITANIUM)	BACC30BF8 (2024-T42)	0.487 0.349	0.214	0.380	0.120	HG100-08 ST8707A-08
BACB30GP-8 BACB30GQ-8 NAS1528 NAS1538 (7075-T6)	NAS1080D08 (6061-T7)	0.374 0.295	0.224	0.400	0.038	HG85-2 ST8711DS-8
BACB30DX8 BACB30DY8 BACB30GX8 NAS1468 NAS1478 (STEEL)	NAS1080R08 (STEEL) BACC30Q8 NAS1080-08 (2024-T4)	0.374 0.295	0.224	0.400	0.038	HG85-2 ST8711DS-8
BACB30TY-8 BACB30TZ-8 (TITANIUM)	BACC30BE8 (2024-T73)	0.411 0.289	0.214	0.380	0.121	HG99-08 ST8728-B-08
BACB30AU10 (BLIND)	NONE	0.374 0.295	0.224	0.400	0.038	HG85-2 ST8711DS-8
BACB30UA10 BACB30UB10 (TITANIUM)	BACC30BF10 (2024-T42)	0.591 0.452	0.279	0.462	0.184	HG100-10 ST8707A-10
BACB30GP10 BACB30GQ10 NAS1530 NAS1540 (7075-T6)	NAS1080D10 (6061-T7)	0.459 0.339	0.268	0.486	0.083	HG85-3 ST8711D-10
BACB30DX10 BACB30DY10	NAS1080P10 (2024-T4)	0.492 0.404	0.268	0.473	0.110	HG85-8 ST8711F-10

STANDARD TENSION, PULL TYPE LOCKBOLT INSPECTION DIMENSION
TABLE II

Pin and Collar Limits for Installed Lockbolts and Hex-Drive Bolts
Figure 13 (Sheet 4)

L62337

BOEING PROPRIETARY - Copyright © - Unpublished Work - See title page for details.

LOCKBOLT PART NO.	COLLAR PART NO.	Y	Z	R	T	GAGE NO.
BACB30GX10 NAS1470 NAS1480 (STEEL)	NAS1080R10 (STEEL)	0.492 0.404	0.268	0.473	0.110	HG85-8 ST8711F-10
BACB30TY10 BACB30TZ10 (TITANIUM)	BACC30BE10 (2024-T73)	0.496 0.385	0.278	0.462	0.150	HG99-10 ST8728B-10
BACB30UA12 BACB308B12 (TITANIUM)	BACC30BF12 (2024-T42)	0.642 0.503	0.341	0.572	0.156	HG100-12 ST8707A-12
BACB30GP12 BACB30GQ12 NAS1532 NAS1542 (7075-T6)	NAS1080D12 (6061-T7)	0.549 0.411	0.339	0.602	0.062	HG85-4 ST8711D-12
BACB30DX12 BACB30DY12 BACB30GX12 NAS1472 NAS1482 (STEEL)	NAS1080P12 (2024-T4) NAS1080R12 (STEEL)	0.604 0.507	0.339	0.576	0.120	HG85-9 ST8711F-12
BACB30TY12 BACB30TZ12 (TITANIUM)	BACC30BE12 (2024-T73)	0.531 0.420	0.339	0.572	0.146	HG99-12 ST8728-B-12

STANDARD TENSION, PULL TYPE LOCKBOLT INSPECTION DIMENSION
TABLE II (CONT)

Pin and Collar Limits for Installed Lockbolts and Hex-Drive Bolts
Figure 13 (Sheet 5)

BOEING PROPRIETARY - Copyright © - Unpublished Work - See title page for details.

LOCKBOLT PART NO.	COLLAR PART NO.	Y	Z	R	T	GAGE NO.
BACB30GW6 BACB30GY6 BACB30LD6	BACC30K6 (2024-T4) NAS1080E06 (STEEL)	0.264 0.191	0.164	N/A	N/A	HG77-14A
BACB30GW8 BACB30GY8 BACB30LD8	BACC30K8 (2024-T4) NAS1080E08 (STEEL)	0.243 0.316	0.224	N/A	N/A	HG77-13A
BACB30GW10 BACB30GY10 BACB30LD10	BACC30K10 (2024-T4) NAS1080E10 (STEEL)	0.341 0.268	0.268	N/A	N/A	HG77-16A
BACB30GW12 BACB30GY12 BACB30LD12	BACC30K12 (2024-T4) NAS1080E12 (STEEL)	0.390 0.319	0.339	N/A	N/A	HG77-17A

STANDARD SHEAR, PULL TYPE LOCKBOLT INSPECTION DIMENSION
TABLE III

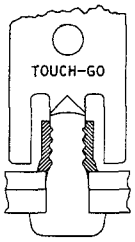

POINTS TOUCH PIN. LEGS OF GAGE CLEAR SHEET LINE. PIN IS ACCEPTABLE. GAGE PIN WITH TOUCH-NO GO END.

ACCEPT

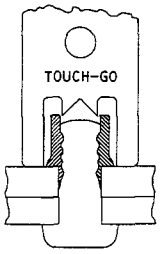

POINTS DO NOT TOUCH END OF PIN. LEGS OF GAGE TOUCH SHEET LINE. PIN GRIP LENGTH IS TOO SHORT.

REJECT

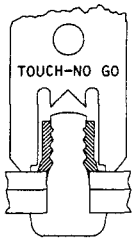

POINTS A DO NOT TOUCH PIN. LEGS OF GAGE TOUCH SHEET LINE. POINTS B DO NOT TOUCH COLLAR. PIN GRIP AND COLLAR SWAGE IS ACCEPTABLE.

ACCEPT

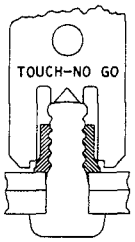

POINTS A TOUCH PIN. LEGS OF GAGE CLEAR SHEET LINE OR POINTS B TOUCH COLLAR. PIN GRIP IS TOO LONG, COLLAR NOT SWAGED ENOUGH.

REJECT

USE OF GAGE HG85-() D E
DETAIL III

Pin and Collar Limits for Installed Lockbolts and Hex-Drive Bolts
Figure 13 (Sheet 6)

BOEING PROPRIETARY - Copyright © - Unpublished Work - See title page for details.

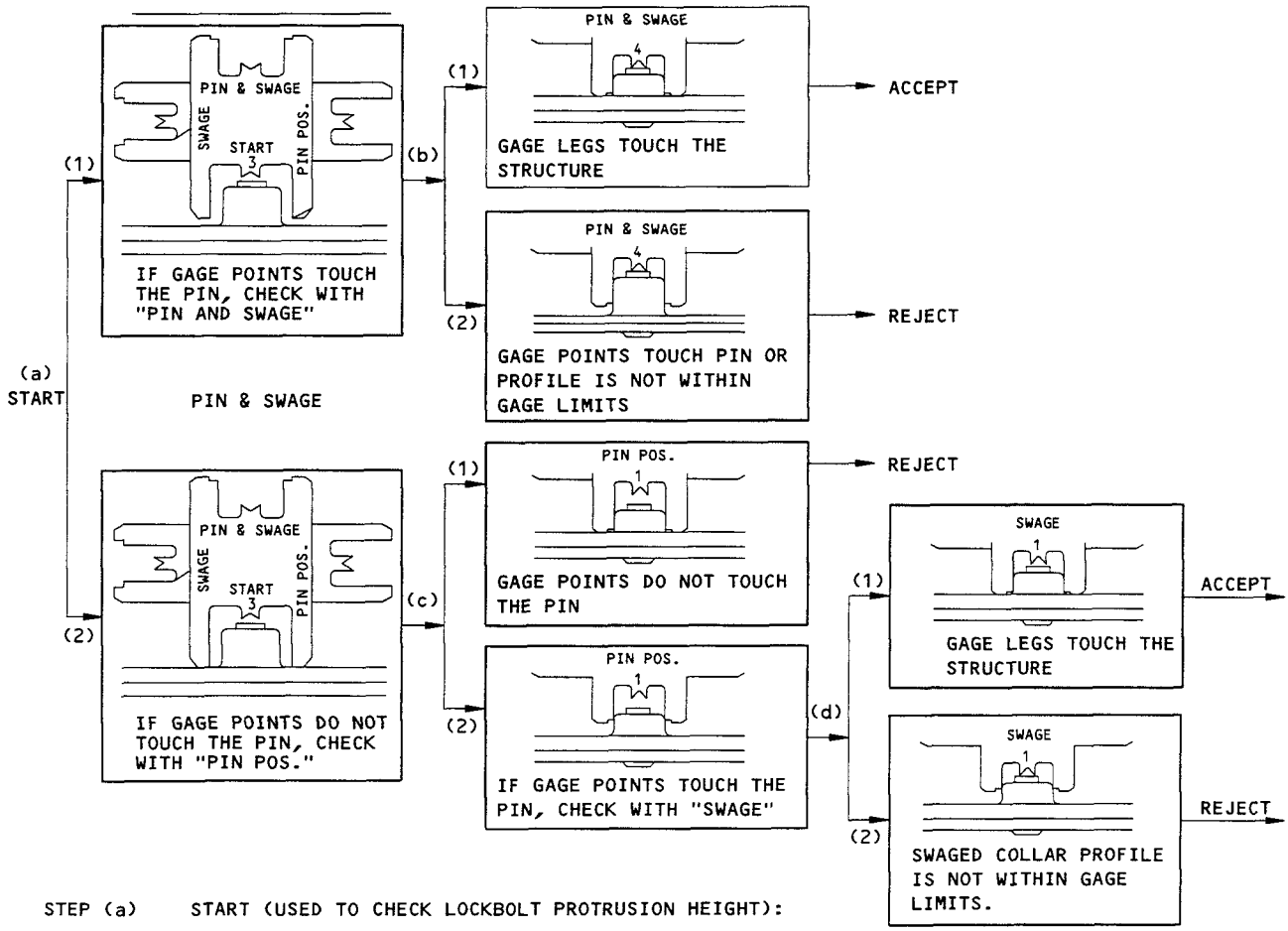

STEP (a) START (USED TO CHECK LOCKBOLT PROTRUSION HEIGHT):

1. If gage points touch the pin, the protrusion height is between nominal (0.225) and maximum (0.280). Check for acceptance with PIN AND SWAGE (Step (b)).
2. If gage points do not touch the pin, the protrusion height is between nominal (0.225) and minimum (0.208). Check for minimum height with PIN POS. (Step (c)).

STEP (b) PIN AND SWAGE, (USED TO CHECK MINIMUM PROTRUSION HEIGHT AND SWAGED COLLAR PROFILE FOR NOMINAL TO MAXIMUM PROTRUSION HEIGHT INSTALLATION):

1. Accept the installation if gage legs touch the structure.
2. Reject if gage points touch the pin (protrusion too high) or if profile is not within limits.

STEP (c) PIN POSITION, (USED TO CHECK MINIMUM PROTRUSION HEIGHT):

1. Reject if gage points do not touch the pin (protrusion height shorter than minimum).
2. If gage points touch the pin, check swage profile with Swage (Step (d)).

STEP (d) SWAGE, (USED TO CHECK SWAGED COLLAR PROFILE FOR PROTRUSION HEIGHT, NOMINAL TO MINIMUM INSTALLATION):

1. Accept the installation if gage legs touch the structure.
1. Reject if swaged collar profile is not within gage limits.

USE OF HG85-10, HG99-(), AND HG100-()
DETAIL IV

Pin and Collar Limits for Installed Lockbolts and Hex-Drive Bolts
Figure 13 (Sheet 7)

BOEING PROPRIETARY - Copyright © - Unpublished Work - See title page for details.

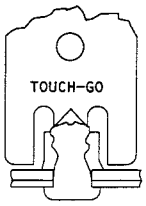

POINTS TOUCH PIN. LEGS OF GAGE CLEAR SHEET LINE. PIN IS ACCEPTABLE. GAGE PIN WITH TOUCH-NO GO END.

ACCEPT

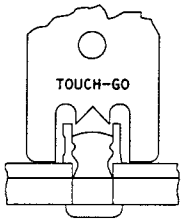

POINTS DO NOT TOUCH PIN. LEGS OF GAGE CLEAR SHEET LINE. PIN GRIP IS TOO SHORT.

REJECT

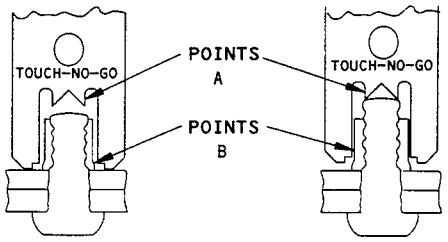

POINTS A DOES NOT TOUCH PIN. LEGS OF GAGE CLEAR SHEET LINE. POINTS B DO NOT TOUCH COLLAR. PIN GRIP AND COLLAR SWAGE IS ACCEPTABLE.

ACCEPT

POINTS A TOUCH PIN. LEGS OF GAGE CLEAR SHEET LINE. POINTS B TOUCH COLLAR. PIN GRIP IS TOO LONG, COLLAR IS NOT SWAGED ENOUGH

REJECT

USE OF HG77-()A [E]
DETAIL V

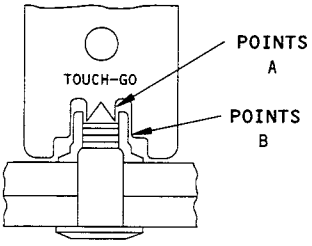

POINTS A TOUCH PIN. GRIP LENGTH IS NOT TOO SHORT. POINTS B DO NOT TOUCH COLLAR- COLLAR IS SWAGED ENOUGH

ACCEPT

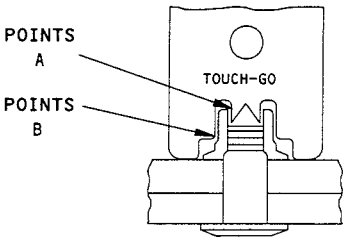

POINTS A DO NOT TOUCH PIN. GRIP LENGTH IS TOO SHORT AND/OR POINTS B TOUCH COLLAR - COLLAR IS NOT SWAGED ENOUGH

REJECT

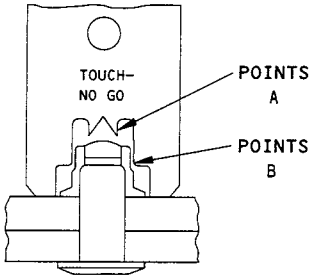

POINTS A DO NOT TOUCH PIN. GRIP LENGTH IS NOT TOO LONG. POINTS B DO NOT TOUCH COLLAR - COLLAR IS SWAGED ENOUGH

ACCEPT

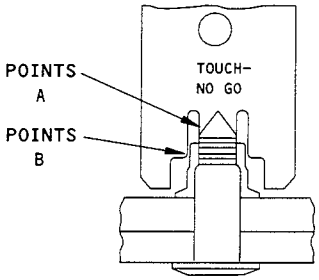

POINTS A TOUCH PIN. GRIP LENGTH IS TOO LONG AND/OR POINTS B TOUCH COLLAR - COLLAR IS NOT SWAGED ENOUGH

REJECT

USE OF HG110-() [E]
DETAIL VI

Pin and Collar Limits for Installed Lockbolts and Hex-Drive Bolts
Figure 13 (Sheet 8)

BOEING PROPRIETARY - Copyright © - Unpublished Work - See title page for details.

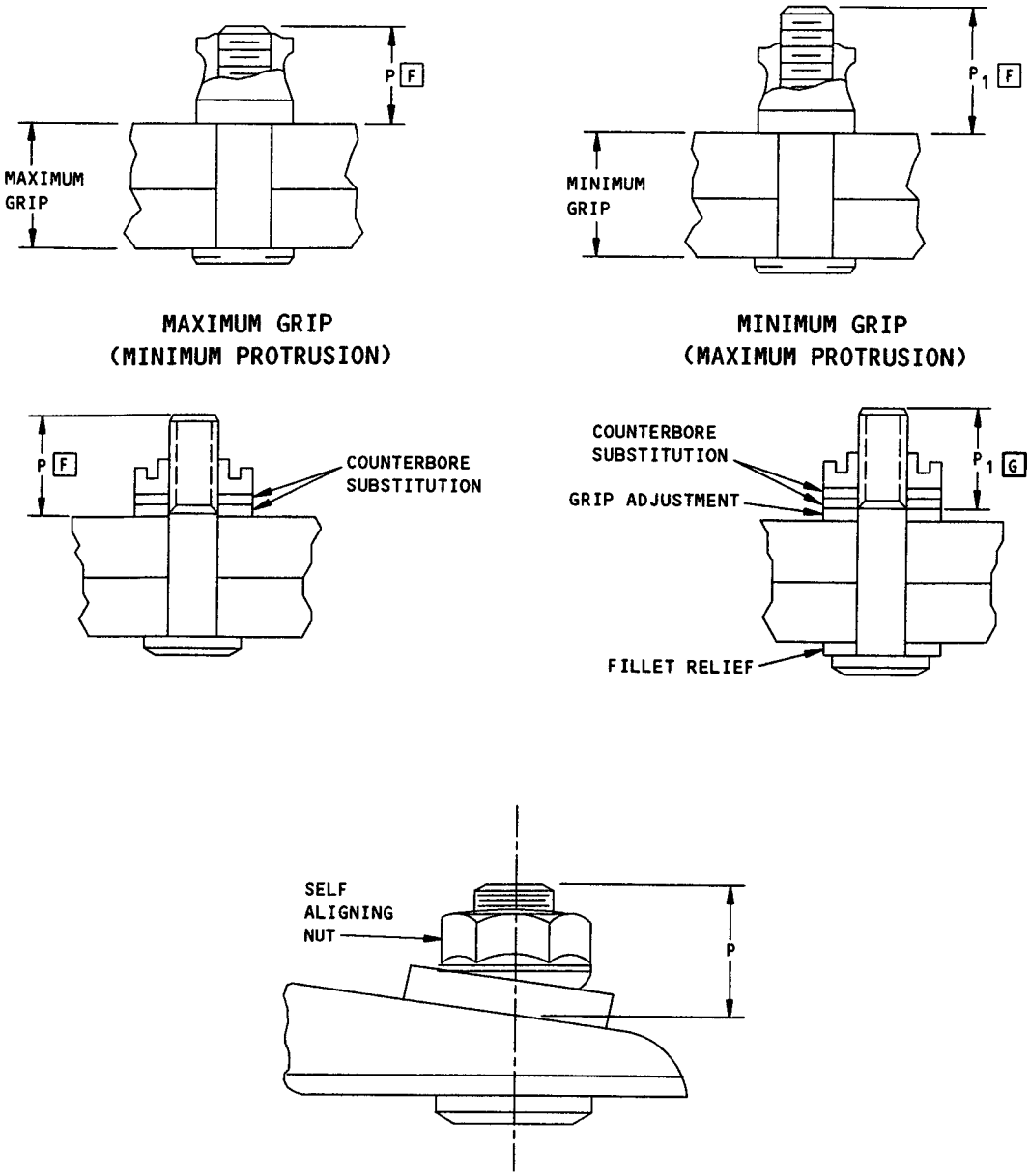

PIN PROTRUSION LIMITS FOR INSTALLED HEX-DRIVE BOLTS
DETAIL VII

Pin and Collar Limits for Installed Lockbolts and Hex-Drive Bolts
Figure 13 (Sheet 9)

BOEING PROPRIETARY - Copyright © - Unpublished Work - See title page for details.

FASTENER		STANDARD							LIGHTWEIGHT		
		NOMINAL, 0.0156 AND 0.0312 OVERSIZE, INCH			0.0468 OVERSIZE, INCH				NOMINAL, INCH		
		SHEAR AND TENSION		ST8712 PROT GAGE DASH NO. (2-1522) PROT GAGE SIZE NO.	SHEAR		TENSION		SHEAR		ST8712 PROT GAGE DASH NO. (2-1522) PROT GAGE SIZE NO.
DASH NO.	NOMINAL THREAD	P MIN (MINIMUM PROTRUSION)	P MIN (MAXIMUM PROTRUSION)		P		P		P		
					MIN.	MAX.	MIN.	MAX.	MIN.	MAX.	
-5	0.1640-32	0.302	0.384	-5 (5/32)	0.333	0.414	0.315	0.397	0.270	0.352	5/32
-6	0.1900-32	0.315	0.397	-6 (3/16)	0.346	0.427	0.350	0.432	0.280	0.362	3/16
-8	0.2500-28	0.385	0.467	-8 (1/4)	0.416	0.497	0.420	0.502	0.310	0.392	1/4
-10	0.3125-24	0.490	0.572	-10 (5/6)	0.521	0.602	0.520	0.602	0.370	0.452	5/16
-12	0.3750-24	0.535	0.617	-12 (3/8)	0.566	0.647	0.565	0.647	0.410	0.492	3/8
-14	0.4375-20	0.625	0.707	-14--	0.656	0.737	0.650	0.732	0.475	0.557	--
-16	0.5000-20	0.675	0.757	-16--	0.706	0.787	0.700	0.782	0.515	0.597	--
-18	0.5625-18	0.760	0.842	-18--	0.791	0.872	0.790	0.872	0.590	0.672	--
-20	0.6250-18	0.815	0.897	-20--	0.846	0.927	0.865	0.947	0.630	0.712	--
-24	0.7500-16	1.040	1.122	-24--	1.071	1.152	1.090	1.172	--	--	--
-28	0.8750-14	1.200	1.282	-28--	1.231	1.312	--	--	--	--	--
-32	1.0000-12	1.380	1.462	-32--	1.411	1.492	--	--	--	--	--

PIN PROTRUSION FOR HEX-DRIVE BOLTS
TABLE IV

Pin and Collar Limits for Installed Lockbolts and Hex-Drive Bolts
Figure 13 (Sheet 10)

L62349

BOEING PROPRIETARY - Copyright © - Unpublished Work - See title page for details.

NOTES

- THE SOURCE OF INFORMATION FOR THIS FIGURE CAN BE FOUND IN BOEING PROCESS SPECIFICATION BAC5060.
- SEE DETAIL I FOR BOLT ALIGNMENT AND DETAIL II FOR THREAD PROTRUSION.
- SEE TABLE I FOR NUT PART NUMBERS, TABLES II AND III FOR WASHERS, AND TABLES IV AND V FOR THREAD PROTRUSION LIMITS.
- SEE DETAILS II AND III FOR WASHER USE.

[A] DO NOT INSTALL BACN10TN, BACN10WN, BACN10HY, OR BACN10SZ NUTS ON SLOPE ANGLES GREATER THAN 2 DEGREES. USE BACN10MT SEALNUT AND BACW10AU SELF-ALIGNING WASHER ON SLOPES BETWEEN 2 AND 6 DEGREES.

[B] DO NOT USE BACN10WM OR BACN10TN SEALNUTS WITH OVERSIZE BOLTS. DO NOT USE WASHERS WITH BACN10WM AND BACN10TN SEALNUTS.

[C] FOR BACN10TN AND BACN10WM SEALNUTS, THE TEFLON SEAL MUST NOT EXTRUDE BEYOND THE PERIPHERY OF THE NUT BASE.

[D] FILLET RELIEF WASHER MUST BE A COUNTERSUNK WASHER AND MUST BE INSTALLED UNDER THE HEAD OF THE BACB30WR RADIUS LEAD-IN BOLT WITH COUNTERSINK DIRECTLY UNDER THE HEAD OF THE BOLT. SEE TABLE III.

[E] COUNTERBORE SUBSTITUTION WASHERS FOR OVERSIZE FASTENERS CAN ADD ONE ADDITIONAL 0.032 THICK WASHER TO THIS INSTALLATION. SEE TABLE I.

[F] COUNTERBORE SUBSTITUTION WASHERS ARE NECESSARY AS FOLLOWS: ONE 0.063 INCH NOMINAL THICKNESS PLAIN WASHER, EXCEPT FOR SIZE 7 NUTS WHERE ONE 0.063 INCH NOMINAL THICKNESS PLAIN WASHER PLUS ONE 0.032 INCH NOMINAL THICKNESS PLAIN WASHER IS NECESSARY. A MAXIMUM THICKNESS CORRESPONDING TO ONE ADDITIONAL 0.063 INCH NOMINAL THICKNESS PLAIN WASHER MAY BE USED FOR GRIP ADJUSTMENT. IN FUEL TANK AREAS, SEAL AS SHOWN IN SRM 51-10-06.

[G] COUNTERBORE SUBSTITUTION WASHERS ARE NECESSARY AS FOLLOWS: ONE 0.063 INCH NOMINAL THICKNESS PLAIN WASHER PLUS ONE 0.032 INCH THICKNESS PLAIN WASHER. A MAXIMUM THICKNESS CORRESPONDING TO ONE ADDITIONAL 0.063 INCH NOMINAL THICKNESS PLAIN WASHER CAN BE USED FOR GRIP ADJUSTMENT. IN FUEL TANK AREAS, SEAL AS SHOWN IN SRM 51-10-06.

[H] ONE 0.063 INCH NOMINAL THICKNESS PLAIN COUNTERBORE SUBSTITUTION WASHER IS NECESSARY.

[I] BACN10MT()X NUT USES THE NEXT FULL SIZE OVER BACW10AU SELF-ALIGNING WASHER (AS AN EXAMPLE, BACN10MT4X USES THE BACW10AU5 WASHER) AND USES ONE 0.063 INCH NOMINAL THICKNESS PLAIN WASHER PLUS ONE 0.032 INCH NOMINAL THICKNESS PLAIN WASHER. BACN10MT()X AND BACW10AU() SELF-ALIGNING NUT COMBINATIONS ARE NOT ALLOWED WITH NOMINAL OR OVERSIZE BACB30PT BOLTS.

[J] SEE TABLE III FOR CORRECT WASHER.

[K] IT IS NECESSARY THAT BACN10MT()X BE USED WITH THE NEXT FULL SIZE OF BACW10AU() WASHER, (FOR EXAMPLE, THE BACN10MX4X NUT USES THE BACW10AU5 WASHER).

DO NOT USE BACN10MT()X WITH BACB30PT NOMINAL OR OVERSIZES.

[L] WHEN OVERSIZE NUTS ARE USED WITH OVERSIZE BOLTS, PROTRUSION VALUES ARE NOT AFFECTED. SEE TABLE II FOR WASHER THICKNESS SELECTION. SEE TABLE III FOR GRIP ADJUSTMENT.

Installation of Radius Lead-In Bolts
Figure 14 (Sheet 1)

BOEING PROPRIETARY - Copyright © - Unpublished Work - See title page for details.

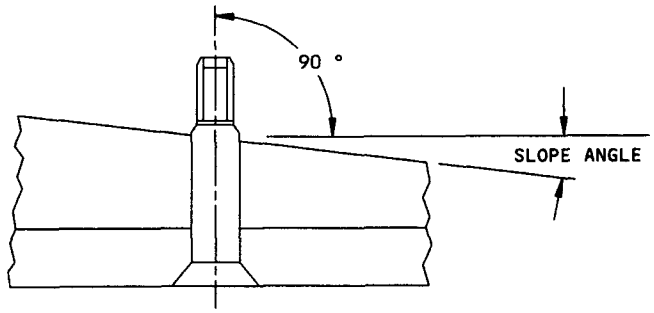

ANGULAR MEASUREMENT BETWEEN BOLT AND STRUCTURE MATERIAL
FOR PROPER NUT SELECTION
DETAIL I [A]

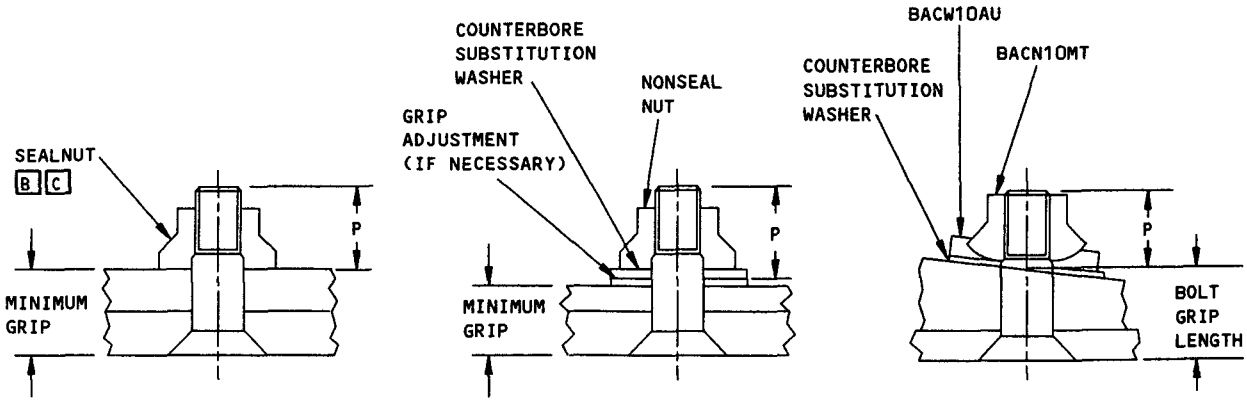

THREAD PROTRUSION AND WASHER USE
DETAIL II

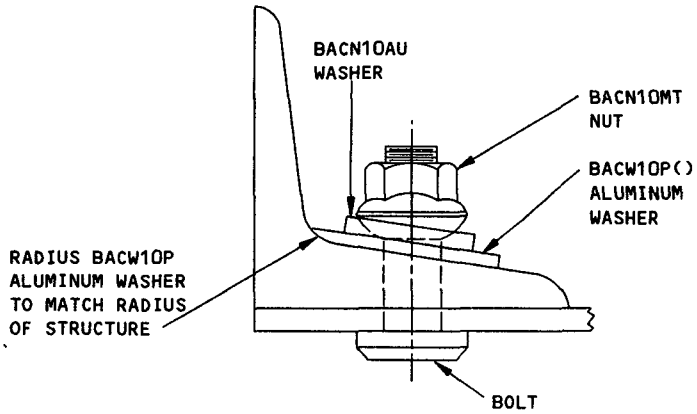

RADIUSED WASHER WITH THE SELF-ALIGNING NUT
DETAIL III

Installation of Radius Lead-In Bolts
Figure 14 (Sheet 2)

BOEING PROPRIETARY - Copyright © - Unpublished Work - See title page for details.

NUT ON STANDARD SIZE BOLT [J]	NUT ON FIRST OVERSIZE BOLT [J]	NUT ON SECOND OVERSIZE BOLT [J]
BACN10HY()M	BACN10HY()M [F]	BACN10HY()MX [G]
BACN10HY()AC	BACN10HY()AC [F]	BACN10HY()ACX [G]
BACN10MY() AND BACW10AU()	BACN10MT() AND BACW10AU() [H]	BACN10MY()X AND BACW10AU() [I]
BACN10TN()K [B]	BACN10SZ() [F] BACN10HY()M [F] BACN10HY()AC [F]	BACN10HY()MX [G] BACN10HY()ACX [G]
BACN10WM() [B]	BACN10HY()AC [F]	BACN10HY()MX [G] BACN10HY()ACX [G]

NOMINAL AND OVERSIZE NUT PART NUMBERS
TABLE I

Installation of Radius Lead-In Bolts
Figure 14 (Sheet 3)

BOEING PROPRIETARY - Copyright © - Unpublished Work - See title page for details.

NOMINAL DIA. NUT AND BOLT COMBINATIONS	WASHER TYPE			TOTAL QUANTITY OF WASHERS [E]
	FILLET RELIEF	COUNTERBORE SUBSTITUTION [E]	GRIP ADJUSTMENT	
BACB30PT()K()L WITH BACN10WM()	DO NOT USE	NOT NECESSARY	DO NOT USE	NONE
BACB3WQ()K()L WITH BACN10TN()K	DO NOT USE	NOT NECESSARY	DO NOT USE	NONE
BACB30PT()K()L, OR BACB30WQ()K()L WITH ALL NON-SEAL NUTS	DO NOT USE	ONE 0.063 THICK WASHER IS NECESSARY (SEE TABLE III)	ONE 0.032 OR 0.063 THICK WASHER IS PERMITTED (SEE TABLE III)	2 MAXIMUM
BACB30WR()K()L WITH BACN10TN()K	ONE 0.063 THICK WASHER IS PERMITTED [D]	NOT PERMITTED	ONE 0.032 OR 0.063 THICK WASHER IS PERMITTED (SEE TABLE III)	2 MAXIMUM
BACB30WR()K()L WITH ALL NON-SEAL NUTS	ONE 0.063 THICK WASHER IS PERMITTED [D]	ONE 0.063 THICK WASHER IS NECESSARY (SEE TABLE III)	ONE 0.032 OR 0.063 THICK WASHER IS PERMITTED (SEE TABLE III)	3 MAXIMUM

THE QUANTITY OF NECESSARY AND PERMITTED WASHERS ON A NOMINAL DIAMETER FASTENER

TABLE II

Installation of Radius Lead-In Bolts
Figure 14 (Sheet 4)

BOEING PROPRIETARY - Copyright © - Unpublished Work - See title page for details.

NOMINAL WASHER THICKNESS	COUNTERSUNK WASHER FOR FILLET RELIEF OR GRIP ADJUSTMENT FOR USE WITH NOMINAL AND OVERSIZE BACB30WR BOLTS	COUNTERBORE SUBSTITUTION AND GRIP ADJUSTMENT WASHERS FOR USE UNDER NUTS USED WITH NOMINAL AND OVERSIZE BACB30WR, BACB30WQ AND BACB30PT BOLTS	
		NUT PART NUMBER	
		BACN10HY() BACN10SZ() BACN10HY()X	BACN10MT() +BACW10AU() BACN10MT()X +BACW10AU() K
NOMINAL I.D. WASHERS			
0.032	----------	BACW10AT2()AS BACW10AW()AS	BACW10P410CG THRU BACW10P415CG
0.063	BACW10EG()J BACW10EG()C	BACW10AW()AST BACW10AT3()AS	BACW10P416CG THRU BACW10P421CG BACW10P416AN THRU BACW10P421AN
0.0156 OVERSIZE I.D. WASHERS			
0.032	----------	BACW10AW()AS BACW10AT2()AS	BACW10P422CG THRU BACW10P427CG
0.063	BACW10EG()1J BACW10EG()1C	BACW10AW()AST BACW10AT3()AS	BACW10P428CG THRU BACW10P433CG
0.0312 OVERSIZE I.D. WASHERS			
0.032		BACW10P446AN BACW10P451AN	BACW10P434CG THRU BACW10P439CG
0.063	BACW10EG()2J BACW10EG()2C	BACW10P452AN BACW10P457AN	BACW10P440CG THRU BACW10P445CG

WASHER SELECTION
TABLE III

Installation of Radius Lead-In Bolts
Figure 14 (Sheet 5)

BOEING PROPRIETARY - Copyright © - Unpublished Work - See title page for details.

BOLT PART NUMBERS	1st DASH NUMBER	NOMINAL THREAD SIZE	NUT PART NUMBERS	MINIMUM PROTRUSION (P MIN)	MAXIMUM PROTRUSION (P MIN)
BACB30PT()K()L	4	0.2500-28	BACN10TN	0.428	0.510
	5	0.3125-24	BACN10WM	0.503	0.585
	6	0.3750-24		0.528	0.610
	4	0.2500-28		0.381	0.454
BACB30WQ()K()L	5	0.3125-24	BACN10TN	0.435	0.508
BACB30WR()K()L	6	0.3750-24		0.493	0.566
	7	0.4375-20		0.590	0.663
	3	0.1900-32	BACN10HY	0.326	0.399
BACB30WQ()K()L	4	0.2500-28	BACN10SZ	0.381	0.454
BACB30WR()K()L	5	0.3125-24	BACN10MT	0.435	0.508
	6	0.3750-24	+BACW10AU	0.493	0.566
	7	0.4375-20		0.590	0.663

FASTENER THREAD PROTRUSION LIMITS
TABLE IV

BOLT PART NUMBERS	1st DASH NUMBER	NOMINAL THREAD SIZE	NUT PART NUMBERS L	MINIMUM PROTRUSION (P MIN)	MAXIMUM PROTRUSION (P MIN)
BACB30PT()K()LX	4	0.2500-28	--	0.428	0.510
BACB30PT()K()LY	5	0.3125-24	BACN10HY()()	0.503	0.585
	6	0.3750-24	BACN10HY()()X	0.528	0.610
BACB30WQ()K()LX	3	0.1900-32	BACN10HY()()	0.374	0.447
BACB30WQ()K()LY	4	0.2500-28	BACN10MT()	0.426	0.499
	5	0.3125-24	+BACW10AU()	0.460	0.533
BACB30WR()K()LX	6	0.3750-24	BACN10MT()()X	0.535	0.608
BACB30WR()K()LY	7	0.4375-20	+BACW10AU()	0.625	0.698
			BACN10HY()()X		

OVERSIZE FASTENER THREAD PROTRUSION LIMITS
TABLE V

Installation of Radius Lead-In Bolts
Figure 14 (Sheet 6)

BOEING PROPRIETARY - Copyright © - Unpublished Work - See title page for details.

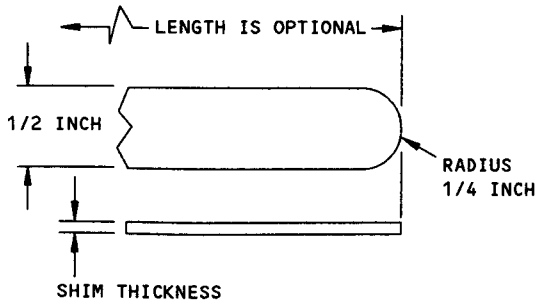

SHIM CONFIGURATION
DETAIL IV

NOMINAL THREAD SIZE	MAXIMUM SHIM THICKNESS
0.1900-32	0.005
0.2500-28	0.006
0.3125-24	0.007
0.3750-24	0.008
0.4375-20	0.008

SHIM THICKNESS UNDER INSTALLED NUTS
AND PROTRUDING HEADS OF RADIUS LEAD-BOLTS
TABLE VI

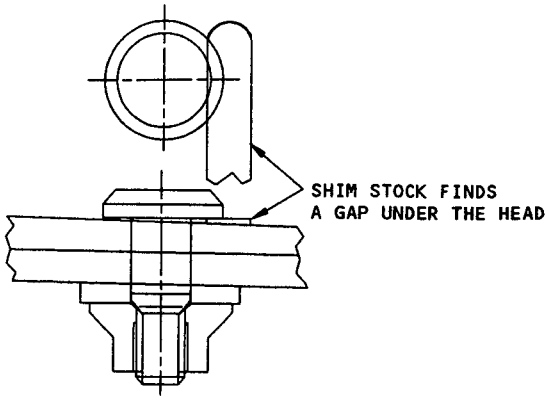

UNSATISFACTORY

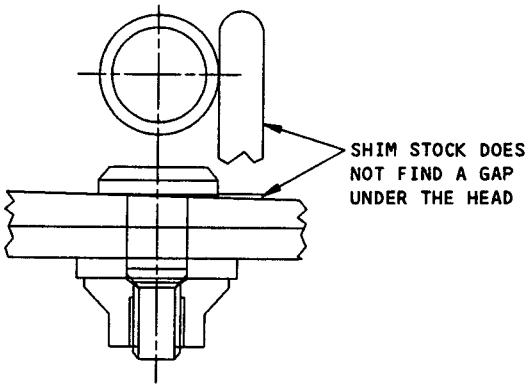

SATISFACTORY

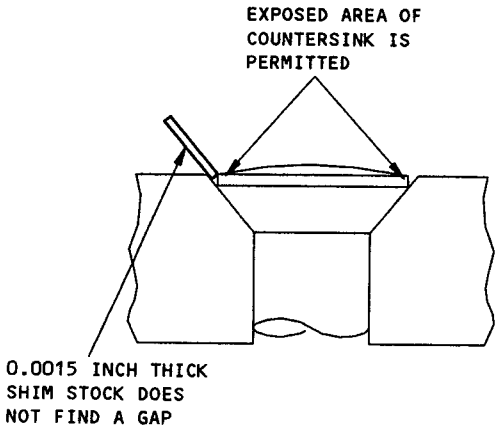

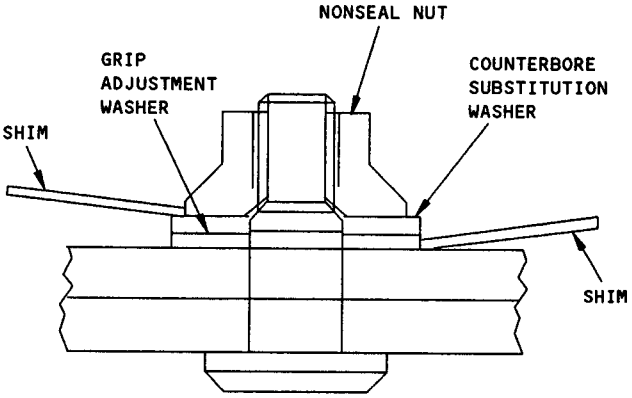

SHIM THICKNESS UNDER INSTALLED NUTS AND
HEADS OF RADIUS LEAD-IN BOLTS
DETAIL V

Installation of Radius Lead-In Bolts
Figure 14 (Sheet 7)

BOEING PROPRIETARY - Copyright © - Unpublished Work - See title page for details.

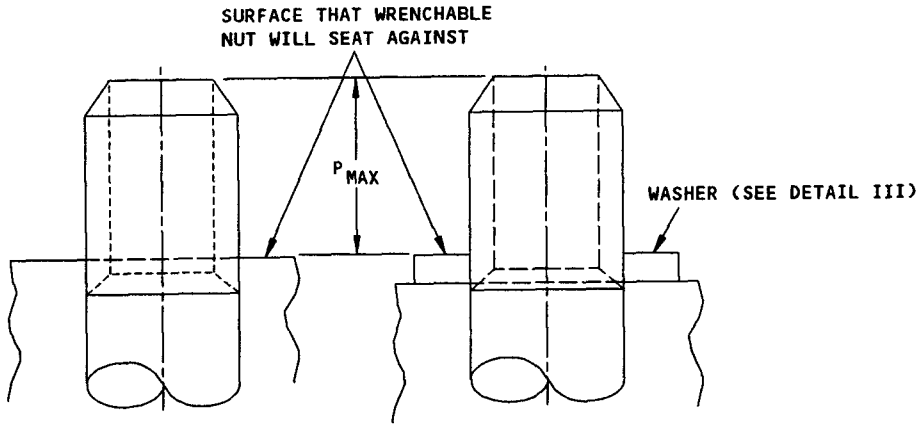

BOLT THREAD PROTRUSION ABOVE BASE OF HEX AND 12-POINT, NONCOUNTERBORED, NONCASTELLATED NUTS (SEE TABLE I)

DETAIL I

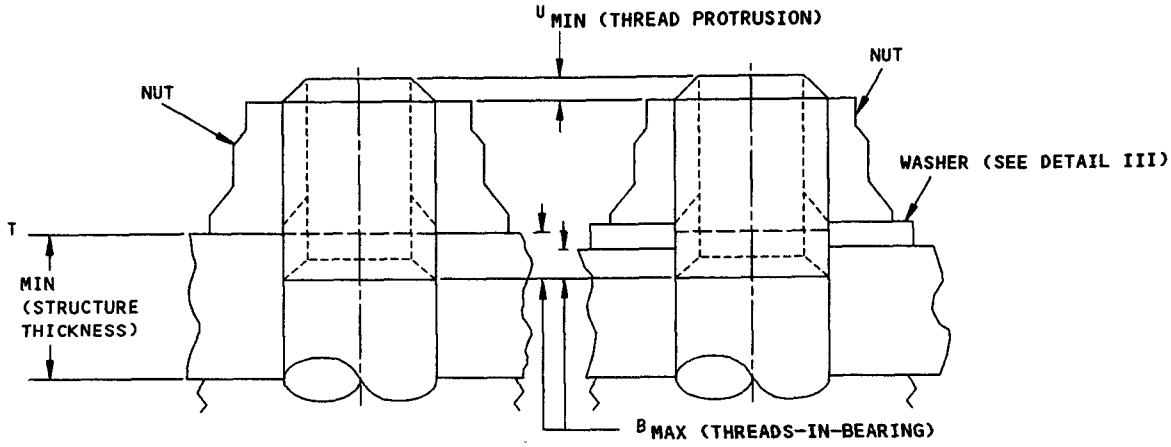

MINIMUM BOLT THREAD PROTRUSION THROUGH THE NUT AND FOR THREADS-IN-BEARING (SEE TABLE II)

DETAIL II

NOTES:

- THE SOURCE OF INFORMATION FOR THIS FIGURE CAN BE FOUND IN BOEING PROCESS SPECIFICATION BAC5009.
- SEE DETAILS I AND II FOR THREAD PROTRUSION
- SEE DETAIL III AND TABLE III FOR WASHER USEAGE
- SEE DETAILS IV AND V AND TABLE IV FOR GAP ANALYSIS

[A] PREFIX FOR 2 LETTER BOLT PART NUMBER CODES SHOWN IS BACB30. EXAMPLE: PN INDICATES BACB30PN SERIES. PREFIX FOR 4 DIGIT BOLT PART NUMBER CODES SHOWN IS NAS. EXAMPLE: 6603 INDICATES NAS6603 SERIES (NAS6603 THRU NAS6620).

[B] NOT APPLICABLE TO BOLTS WITH CASTELLATED NUTS. NOT APPLICABLE TO PLATE NUTS. NOT APPLICABLE TO BARREL NUTS. NOT APPLICABLE TO FULLY THREADED SCREWS.

[C] TO CALCULATE ACTUAL B MAX, MEASURE TOTAL STRUCTURE THICKNESS (STACKUP) AT HOLE, (ADD THICKNESS FOR ANY WASHERS), SUBTRACT NOMINAL GRIP LENGTH (GRIP LENGTH DASH NUMBER TIMES 0.0625) OF FASTENER AND SUBTRACT 0.010 INCH FOR FASTENER GRIP LENGTH TOLERANCE.

Installation of Bolts
Figure 15 (Sheet 1)

BOEING PROPRIETARY - Copyright © - Unpublished Work - See title page for details.

NOMINAL THREAD SIZE	THREAD PROTRUSION "P MAX" NOMINAL SIZE BOLTS [A]					THREAD PROTRUSION "P MAX" 0.0156 O.S. BOLTS [A]				
	PN, LE,US	LM, LP,LR, LU,MR, PC,MS XJ,NM, XK,XM, LN,NN, 6603, XL,WP, 6703, NE, 6803,NS	LH,LJ, LK,LL, LT,NF, NR,NT, NU,NJ, UU,NK, UW,XN, NL,RF	VF, 6203, 6303, 8702	PU,PF, PW	PN,LE, US	LM,LP, LR,LU, MR,PC, MS,XJ, NM,XK, NN,XL, XM,LN, 6603, WP, 6703, NE, 6803,NS	LH,LJ, LK,LL, LT,NF, NJ,NR, NK,NT, NL, NU,RF, UU, UW, XN	VF, 6203, 6303, 8703	PU,PF, PW
0.0860-56	--	--	--	--	--	--	--	--	--	--
0.1120-40	--	0.213	0.213	--	--	--	0.196	0.196	--	--
0.1380-32	--	0.252	0.252	--	0.262	--	0.235	0.235	--	0.246
0.1640-32	--	0.289	0.289	0.266	--	--	0.272	0.272	0.249	--
0.1900-32	0.334	0.289	0.289	0.277	0.299	0.317	0.272	0.272	0.260	0.282
0.2500-28	0.439	0.364	0.328	0.319	0.374	0.423	0.348	0.312	0.303	0.358
0.3125-24	0.526	0.402	0.387	0.381	0.412	0.510	0.386	0.371	0.365	0.396
0.3750-24	0.576	0.511	0.403	0.397	0.521	0.560	0.495	0.387	0.381	0.505
0.4375-20	0.658	0.619	0.466	0.463	0.629	0.641	0.602	0.449	0.446	0.612
0.5000-20	0.738	0.660	0.466	0.463	0.670	0.721	0.643	0.449	0.446	0.653
0.5625-18	0.829	0.759	0.524	0.523	--	0.813	0.743	0.508	0.507	--
0.6250-18	0.889	0.821	0.556	0.555	0.831	0.873	0.805	0.540	0.539	0.815
0.7500-16	1.064	0.954	0.586	0.588	--	1.047	0.937	0.569	0.572	--
0.8750-14	1.241	1.088	0.666	0.673	--	1.224	1.071	0.649	0.656	--
1.0000-12	1.415	1.201	0.783	0.797	--	1.398	1.184	0.766	0.780	--
1.2500-12	1.575	1.350	0.877	0.891	--	1.558	1.333	0.860	0.874	--
1.2500-12	1.715	1.538	0.971	0.985	--	1.698	1.521	0.954	0.968	--
1.3750-12	2.173	--	--	--	--	2.156	--	--	--	--
1.5000-12	2.360	--	--	--	--	2.343	--	--	--	--

BOLT THREAD PROTRUSION ABOVE BASE OF HEX AND 12-POINT, NONCOUNTERBORED, NONCASTELLATED NUTS [B]

TABLE I

Installation of Bolts
Figure 15 (Sheet 2)

BOEING PROPRIETARY - Copyright © - Unpublished Work - See title page for details.

NOMINAL THREAD SIZE	THREAD PROTRUSION "P MAX" 0.0312 O.S.BOLTS [A]				
	PN,LE,US	LM,LP,LR,LU MR,PC,MS,XJ, NM,XK,NN,XM, LN,6603,WP, 6703,NE,6803, NS,XL	LH,LJ,LK,LL, LT,NF,NR,NT, NU,NJ,UU,NK, UW,XN,NL,RF	VF,6203,6303, 8702	PU,PF,PW
0.0860-56	--	--	--	--	--
0.1120-40	--	0.180	0.180	--	--
0.1380-32	--	0.213	0.218	--	0.228
0.1640-32	--	0.255	0.255	0.232	--
0.1900-32	0.300	0.255	0.255	0.243	0.265
0.2500-28	0.406	0.331	0.295	0.286	0.341
0.3125-24	0.493	0.369	0.354	0.348	0.379
0.3750-24	0.543	0.478	0.370	0.364	0.488
0.4375-20	0.625	0.586	0.433	0.430	0.596
0.5000-20	0.705	0.627	0.433	0.430	0.637
0.5625-18	0.796	0.726	0.491	0.490	--
0.6250-18	0.856	0.788	0.523	0.522	0.798
0.7500-16	1.030	0.920	0.552	0.555	--
0.8750-14	1.207	1.054	0.632	0.639	--
1.0000-12	1.381	1.167	0.749	0.763	--
1.1250-12	1.541	1.316	0.843	0.857	--
1.2500-12	1.681	1.504	0.937	0.951	--
1.3750-12	2.139	--	--	--	--
1.5000-12	2.326	--	--	--	--

BOLT THREAD PROTRUSION ABOVE BASE OF HEX AND 12-POINT, NONCOUNTERBORED, NONCASTELLATED NUTS [B]

TABLE I (CONTD)

Installation of Bolts
Figure 15 (Sheet 3)

BOEING PROPRIETARY - Copyright © - Unpublished Work - See title page for details.

NOMINAL THREAD SIZE	MINIMUM THREAD PROTRUSION THROUGH THE NUT			THREADS IN BEARING FOR STRUCTURE THICKNESS UNDER THE NUT								THREADS-IN-BEARING [C]
				STRUCTURE THICKNESS T MIN								
	U MIN			EQUAL TO OR LESS THAN 0.093	0.100	0.200	0.300	0.400	0.500	0.600	EQUAL TO OR GREATER THAN	
	ALL BOLTS EXCEPT AS NOTED	[A] VF (ONLY)	[A] LK (ONLY)	THREADS-IN-BEARING								
				B MAX								B MAX
0.0860-56	--	--	--	0.000	0.025	0.036	0.036	0.036	0.036	0.036	0.143	0.036
0.1120-40	0.031	--	0.031	0.000	0.025	0.050	0.050	0.050	0.050	0.050	0.200	0.050
0.1380-32	0.039	--	0.039	0.000	0.025	0.050	0.063	0.063	0.063	0.063	0.250	0.063
0.1640-32	0.039	0.031	0.039	0.000	0.025	0.050	0.063	0.063	0.063	0.063	0.250	0.063
0.1900-32	0.039	0.031	0.045	0.000	0.025	0.050	0.063	0.063	0.063	0.063	0.250	0.063
0.2500-28	0.045	0.036	0.045	0.000	0.025	0.050	0.071	0.071	0.071	0.071	0.286	0.071
0.3125-24	0.052	0.042	0.052	0.000	0.025	0.050	0.075	0.083	0.083	0.083	0.333	0.083
0.3750-24	0.052	0.042	0.052	0.000	0.025	0.050	0.075	0.083	0.083	0.083	0.333	0.083
0.4375-20	0.062	0.050	--	0.000	0.025	0.050	0.075	0.100	0.100	0.100	0.400	0.100
0.5000-20	0.062	0.050	--	0.000	0.025	0.050	0.075	0.100	0.100	0.100	0.400	0.100
0.5625-18	0.068	--	--	0.000	0.025	0.050	0.075	0.100	0.111	0.111	0.444	0.111
0.6250-18	0.068	--	--	0.000	0.025	0.050	0.075	0.100	0.111	0.111	0.444	0.111
0.7500-16	0.078	--	--	0.000	0.025	0.050	0.075	0.100	0.125	0.125	0.500	0.125
0.8750-14	0.089	--	--	0.000	0.025	0.050	0.075	0.100	0.125	0.125	0.571	0.143
1.0000-12	0.104	--	--	0.000	0.025	0.050	0.075	0.100	0.125	0.150	0.667	0.167
1.1250-12	0.104	--	--	0.000	0.025	0.050	0.075	0.100	0.125	0.150	0.667	0.167
1.2500-12	0.104	--	--	0.000	0.025	0.050	0.075	0.100	0.125	0.150	0.667	0.167
1.3750-12	0.104	--	--	0.000	0.025	0.050	0.075	0.100	0.125	0.150	0.667	0.167
1.5000-12	0.104	--	--	0.000	0.025	0.050	0.075	0.100	0.125	0.150	0.667	0.167

BOLT THREAD PROTRUSION THROUGH THE NUT
AND FOR THREADS-IN-BEARING

TABLE II

Installation of Bolts
Figure 15 (Sheet 4)

BOEING PROPRIETARY - Copyright © - Unpublished Work - See title page for details.

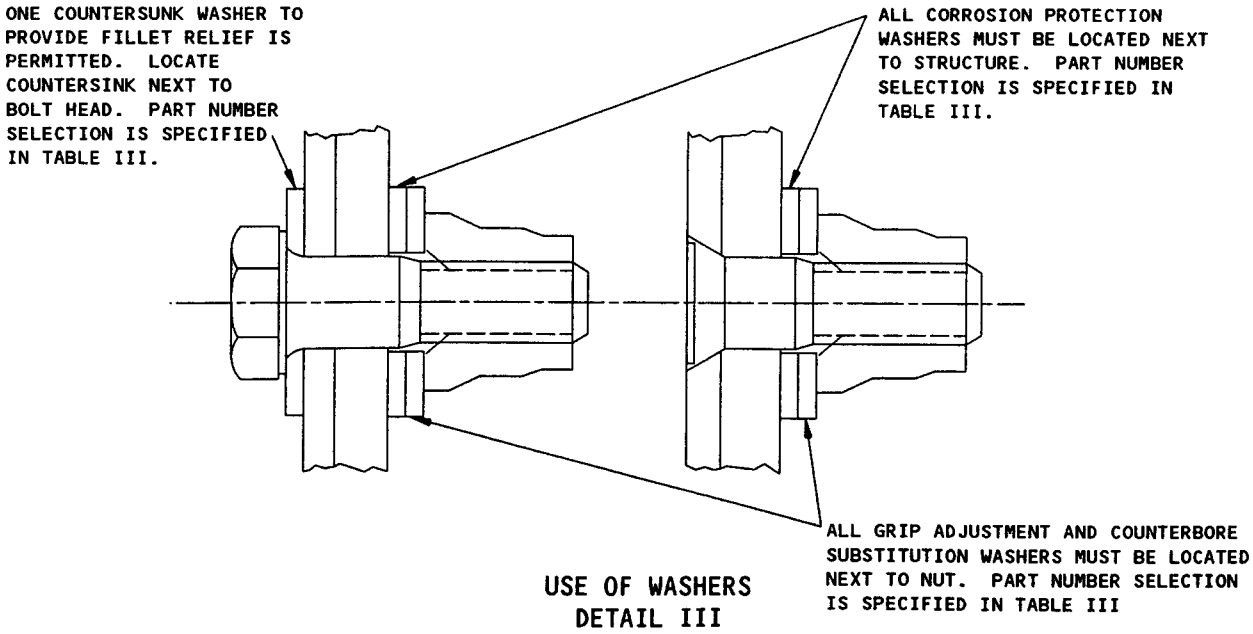

USE OF WASHERS
DETAIL III

EXAMPLE BOLT PART NUMBERS	STRUCTURE MATERIAL	PLAIN WASHER UNDER NUT	COUNTERSUNK WASHER UNDER BOLT HEAD
BACB30, TYPE GU, LE MR, PN, UG, US, VC, XL, MS21250	ALUMINUM	BACW10BP()DP, OR NAS1149E()P	BACW10BP()CD
	STEEL	BACW10BP()DP, OR NAS1149E()P	BACW10BP()CD
	CRES	BACW10BP()APU, OR NAS1149E()R	BACW10BP()ACU
	TITANIUM	BACW10BP()APU, OR NAS1149E()R	BACW10BP()ACU
ALL OTHER BOLTS AND SCREWS	ALUMINUM	BACW10BN()AP, OR NAS1149E()P	BACW10BN()AC
	STEEL	BACW10BP()DP, OR NAS1149E()P	BACW10BP()CD
	CRES	BACW10BP()APU, OR NAS1149C()R, OR NAS1149E()R	BACW10BP()ACU
	TITANIUM	BACW10BP()APU, OR NAS1149C()R, OR NAS1149E()R	BACW10BP()ACU

WASHER USAGE
TABLE III

Installation of Bolts
Figure 15 (Sheet 5)

L62364

BOEING PROPRIETARY - Copyright © - Unpublished Work - See title page for details.

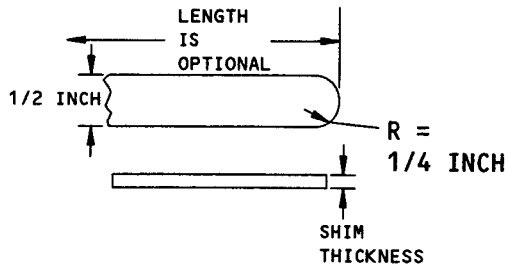

GAP INSPECTION SHIM
DETAIL IV

NOMINAL THREAD SIZE	SHIM THICKNESS +0.0000/ -0.0005
0.1640-32	0.004
0.1900-32	0.005
0.2500-28	0.006
0.3125-24	0.007
0.3750-24	0.008
0.4375-20	0.009
0.5000-20	0.010
0.5625-20	0.011
0.6250-18	0.012
0.7500-16	0.014
0.8750-14	0.016
1.0000-12	0.018
1.1250-12	0.020
1.2500-12	0.022
1.3750-12	0.024
1.5000-12	0.026
1.6250-12	0.028
1.7500-12	0.030
2.0000-12	0.034

NUT GAP SHIM THICKNESS

TABLE IV

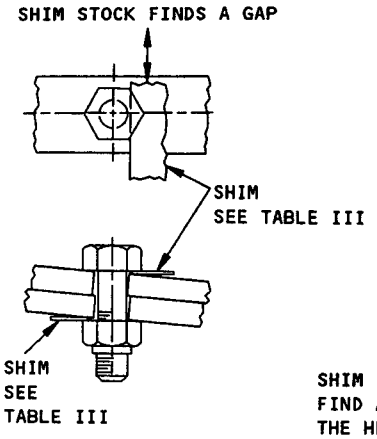

UNSATISFACTORY

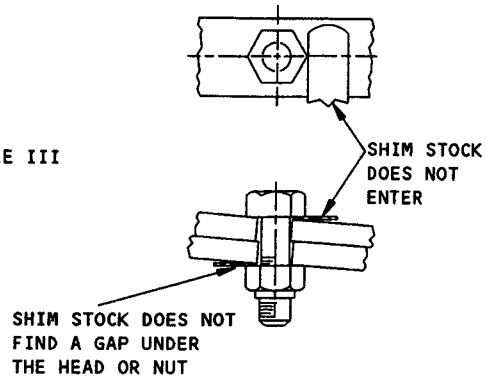

SATISFACTORY

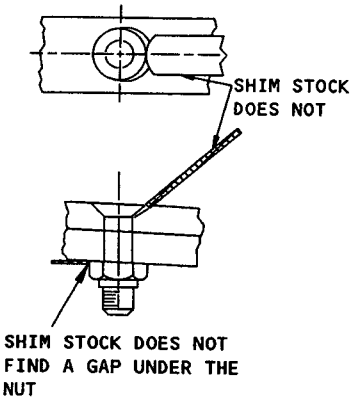

SATISFACTORY

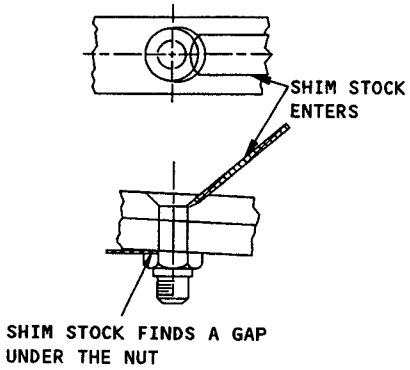

UNSATISFACTORY

GAP ANALYSIS FOR REMOVABLE FASTENERS (BOLTS)
DETAIL V

Installation of Bolts
Figure 15 (Sheet 6)

BOEING PROPRIETARY - Copyright © - Unpublished Work - See title page for details.

GENERAL - FASTENER SUBSTITUTION

1. Applicability

   A. Use this chapter-section-subject to find an equivalent fastener or an alternative fastener to replace the fastener that was initially installed in the airplane structure. You can also use this chapter-section-subject to find replacement fasteners for subsequent repairs on the airplane.

2. General

   A. When the repairs given in this manual are adapted for in-service repair, it is possible for the operator to use a different type of fastener as an alternative to the fastener specified in the repair procedure.

   B. The fastener selection for repairs specified in the Structural Repair Manual or by the Engineering drawings is based on the data that follows:

      - Strength
      - Corrosion protection
      - Weight
      - Temperature
      - Fatigue properties
      - Method of installation

   C. It can be necessary to install alternative fasteners because:

      - The specified fastener is not available
      - It is not easy to get access to a necessary location
      - The special repair is different from the general repair

   D. Paragraph 4. gives definitions and other fastener data that are related to the Fastener Substitution Tables given in Fig. 1, 2 and 3.

3. References

   A. SRM 51-30-6, General - Fastener Edge Margins

BOEING PROPRIETARY - Copyright © - Unpublished Work - See title page for details.

4. Fastener Substitution Tables

A. Table 1 gives an index for the Fastener Substitution Tables. Equivalent and alternative fasteners are shown by part numbers in different columns in the Fastener Substitution Tables. The flagnotes given near the fastener part numbers tell about the permitted use of the equivalent or alternative fasteners.

B. An EQUIVALENT fastener is a fastener which is directly interchangeable with the initial fastener. Usually the equivalent fasteners are given under a vendor part number and are not always the same as those supplied to The Boeing Company.

CAUTION: DO NOT USE THE FASTENER SUBSTITUTION TABLES TO FIND ALTERNATIVES FOR THE FASTENERS LISTED IN THE ALTERNATIVE COLUMN. IF YOU DO NOT OBEY, YOU WILL NOT HAVE AN APPROVED REPAIR.

C. An ALTERNATIVE fastener is a fastener with equal or greater strength properties than the initial fastener. However, an alternative fastener cannot be used when:

(1) They do not give the necessary pressure or fuel seal.

(2) Nonmagnetic fasteners are necessary and the alternative fastener is magnetic.

(3) Fastener thread length, grip length or diameter is not available.

(4) Access does not permit fastener installation.

(5) Fastener installation tools are not available.

D. When the equivalent or alternative fasteners are used, use the same fastener spacing shown on the applicable repair.

E. Do not use an equivalent or alternative flush head fastener if the necessary countersink is deeper than the initial flush head fastener.

F. If an alternative bolt is used, it must have the same locking feature as the initial bolt. Usual locking features include a drilled head, drilled shank, or a self-locking nut. For bolts used as an alternative for hex-drive bolts or lockbolts that are installed in non-interference holes, an applicable self-locking nut must be installed.

G. Do not use aluminum or alloy steel fasteners as alternatives for titanium or corrosion-resistant steel fasteners in graphite structures.

H. The equivalent and alternative fasteners given in the substitution tables can have a different electrical conductivity than the initial fasteners. If electrical bonding across the fastener is necessary, make sure that the equivalent or alternative fasteners have the necessary electrical conductivity.

BOEING PROPRIETARY - Copyright © - Unpublished Work - See title page for details.

5. Fasteners Inactive for Boeing Design (Supersessions)

A. It is possible to continue to use fasteners that are inactive for design in Boeing Airplanes. If you have a fastener in stock that a Boeing Fastener Specification shows is superseded, you are permitted to use it if the alternative fastener (or fasteners) is a Class I, Class II, IIA, III, or IV Supersession.

NOTE: A Class IV Supersession fastener and the fastener that it supersedes, are not interchangeable.

B. If a fastener has been superseded by a Class V Supersession, Boeing recommends that you use an alternative fastener.

BOEING PROPRIETARY - Copyright © - Unpublished Work - See title page for details.

INDEX TO FASTENER SUBSTITUTION TABLES	
Fastener Substitution - Rivets	Figure 1
Fastener Substitution - Bolts	Figure 2
Fastener Substitution - Lockbolts	Figure 3

TABLE 1

BOEING PROPRIETARY - Copyright © - Unpublished Work - See title page for details.

NOTES

- REFER TO TABLE I FOR THE FASTENER SUBSTITUTION INDEX.
- REFER TO SRM 51-30-2 FOR THE REMOVAL AND THE INSTALLATION OF FASTENERS.
- REFER TO SRM 51-10-2 FOR THE NECESSARY PROTECTIVE TREATMENT TO INSTALL FASTENERS.

A YOU MUST KEEP THE COUNTERSINK DEPTH CONSTANT FOR ALL BACR15CE AND BACR15GF RIVETS.

- IF SUBSTITUTE RIVETS ARE INSTALLED, YOU MUST MICRO-SHAVE THE ALTERNATIVE RIVET TO MAKE SURE THAT THE REPAIR SURFACE IS SMOOTH.

B THE NOMINAL DIAMETER OF THE BACR15FP, BACR15FR, NAS1738, AND THE NAS1739 BLIND RIVETS ARE APPROXIMATELY 1/64 INCH GREATER THAN THE NOMINAL DIAMETER OF NAS1398 AND NAS1399 BLIND RIVETS. REFER TO SRM 51-30-5.

C NAS1398 AND NAS1399 BLIND RIVETS ARE SUPPLIED WITH SPINDLES THAT HAVE A FULL SERRATION, OR A PARTIAL SERRATION.

- NAS1398-()-() AND NAS1399-()-() HAVE A PARTIAL SERRATION
- NAS1398-()A() AND NAS1399-()A() HAVE A FULL SERRATION.

NOTE: USE ONLY THE SPECIFIED TOOL FOR A GIVEN TYPE OF SPINDLE SERRATION.

D THESE FASTENERS ARE ONLY PERMITTED FOR THE ATTACHMENT OF NUTPLATES.

E THIS FASTENER IS NOT PERMITTED FOR USE IN MAGNESIUM STRUCTURES.

F ASK THE BOEING COMPANY FOR FASTENER ALTERNATIVES.

G THIS FASTENER IS PERMITTED WHEN THE DIAMETER IS ≤5/16 INCH.

H THE INITIAL FASTENER IS USED IN FUEL AREAS OF THE WING. IT IS POSSIBLE THAT THE REPLACEMENT FASTENER WILL HAVE SPECIAL INTERFERENCE REQUIREMENTS. ASK THE BOEING COMPANY FOR ALTERNATIVE FASTENER AND INSTALLATION INSTRUCTIONS.

I THE BLIND RIVET IS ONLY APPLICABLE TO THE ATTACHMENT OF NUTPLATES THAT HAVE A PRIMARY FASTENER HOLE DIAMETER UP TO A MAXIMUM OF 1/4 INCH.

- THIS IS NOT APPLICABLE TO THE ATTACHMENT OF DOME SEAL NUTS, RIGHT ANGLE NUTPLATES, OR STANDOFFS.
- THIS IS APPLICABLE TO NUTPLATE ATTACHMENT WHERE THE PRIMARY FASTENER IS INSTALLED IN A NON-COLD WORKED CLASS 2 OR CLASS 3 HOLE.

THE BLIND RIVET IS NOT PERMITTED IN AREAS NEAR THE ENGINE INLETS, FUSELAGE SKINS, FUSELAGE FRAMES, FLOOR BEAMS, WING LEADING OR TRAILING EDGE STRUCTURE.

THE BLIND RIVET CAN ONLY BE USED WHEN YOU DO NOT HAVE SUFFICIENT ACCESS TO INSTALL SOLID RIVETS.

- INSTALL THE BLIND RIVETS WET WITH THE APPLICABLE SEALANT.

J DO NOT USE THESE FASTENERS IN FUEL TANK AREAS.

K THIS FASTENER IS ALLOY STEEL AND IS ONLY PERMITTED FOR USE INSIDE THE PRESSURIZED FUSELAGE ABOVE THE FLOOR.

L REDUCED HEAD FASTENERS ARE NOT PERMITTED AS SUBSTITUTES FOR UNIVERSAL HEAD RIVETS IN FUSELAGE SKIN AND PRESSURE BULKHEAD STRUCTURES.

M THIS FASTENER IS NOT PERMITTED IN ALUMINUM STRUCTURE OR WHERE ELECTRICAL CONDUCTIVITY IS REQUIRED.

N SUBSTITUTION IS NOT PERMITTED IN AREAS WHERE THE ALTERNATIVE PART RIVET HEAD WOULD TOUCH A PART RADIUS ON THE STRUCTURE.

O SUBSTITUTION FOR REDUCED HEAD RIVET NOT PERMITTED IN ALUMINUM STRUCTURE. DO NOT MICROSHAVE MONEL RIVETS IN ALUMINUM STRUCTURE.

P INSTALL TO THE SAME BUTTON DIMENSIONS AS THE BACR15GF RIVET.

Fastener Substitution - Rivets
Figure 1 (Sheet 1)

BOEING PROPRIETARY - Copyright © - Unpublished Work - See title page for details.

TYPE OF RIVET FASTENER	LOCATION OF FASTENER	
	TABLE NUMBER	SHEET NUMBER
RIVET - SOLID SHANK - PROTRUDING HEAD	II	3 THROUGH 5
RIVET - SOLID SHANK - FLUSH HEAD	III	6 THROUGH 9
RIVET - BLIND - PROTRUDING HEAD	IV	10 THROUGH 12
RIVET - BLIND - FLUSH HEAD	V	13 THROUGH 15
RIVET - SLUG	VI	16

RIVET FASTENER SUBSTITUTION INDEX
TABLE I

Fastener Substitution - Rivets
Figure 1 (Sheet 2)

BOEING PROPRIETARY - Copyright © - Unpublished Work - See title page for details.

INITIAL FASTENER OR SPECIFIED REPAIR FASTENER		FASTENER SUBSTITUTION	
PART NUMBER	DESCRIPTION	EQUIVALENT	ALTERNATIVE
BACR15AY()-()	ALLOY STEEL HI SHEAR FLAT HEAD INTERFERENCE F17 160 KSI	NO EQUIVALENT	F
BACR15BB()A()	1100F AL, ANODIZED, CLOSE TOLERANCE SHANK	MS20470A	BACR15DR()P() E I J K
			BACR15DR()PAC() E I J
BACR15BB()A()C	1100-F AL, CONVERSION COATED, CLOSE TOLERANCE SHANK	NO EQUIVALENT	BACR15DR()P() E I J K
			BACR15DR()PAC() E I J
BACR15BB()AD()	2117-T4 AL, ANODIZED OR CONVERSION COATED, CLOSE TOLERANCE SHANK	MS20470AD	BACR15BB()AD()C
			BACR15DR()P() E I J K
			BACR15DR()PAC() E I J
			BACR15FT()AD L
BACR15BB()AD()C	2117-T4 AL, CONVERSION COATED, CLOSE TOLERANCE SHANK	NO EQUIVALENT	BACR15DR()P() E I J K
			BACR15DR()PAC() E I J
BACR15BB()B()	5056-H32 AL, ANODIZED OR CONVERION COATED, CLOSE TOLERANCE SHANK	NO EQUIVALENT	BACR15BB()B()C
			BACR15DR()P() E I J K
			BACR15DR()PAC() E I J
BACR15BB()B()C	5056-H32 AL, CONVERSION COATED, CLOSE TOLERANCE SHANK	NO EQUIVALENT	BACR15DR()P() E I J K
			BACR15DR()PAC() E I J
BACR15BB()D()	2017-T4 AL, ANODIZED OR CONVERSION COATED, CLOSE TOLERANCE SHANK	MS20470D	BACR15BB()D()C
			BACR15BB()DD()
			BACR15DR()P() E I J K
			BACR15DR()PAC() E I J
			BACR15FT()D() G L
			BACR15FT()KE()C G L
			MS20470DD
BACR15BB()D()C	2017-T4 AL, CONVERSION COATED, CLOSE TOLERANCE SHANK	NO EQUIVALENT	BACR15DR()P() E I J K
			BACR15DR()PAC() E I J
			BACR15FT()KE()C G L

RIVET - SOLID SHANK - PROTRUDING HEAD
TABLE II

Fastener Substitution - Rivets
Figure 1 (Sheet 3)

BOEING PROPRIETARY - Copyright © - Unpublished Work - See title page for details.

INITIAL FASTENER OR SPECIFIED REPAIR FASTENER		FASTENER SUBSTITUTION	
PART NUMBER	DESCRIPTION	EQUIVALENT	ALTERNATIVE
BACR15BB()DD()	2024-T4 AL, ANODIZED, CLOSE TOLERANCE SHANK	MS20470DD	BACR15DR()P() [E] [I] [J] [K]
			BACR15DR()PAC() [E] [I] [J]
			BACR15FT()DD() [L]
			BACR15FT()KE()C [G] [J] [L]
BACR15DX()M()	MONEL, CLOSE TOLERANCE SHANK	NO EQUIVALENT	NASM20615-()M()
BACR15DX()-()	A286 CRES UNIVERSAL HEAD CLOSE TOLERANCE SHANK	NO EQUIVALENT	NAS1198()-()
BACR15ET()AD()	2117-T4 AL, ANODIZED, UNIVERSAL HEAD, CLOSE TOLERANCE SHANK, 0.031 OVERSIZE	NO EQUIVALENT	NAS1242AD
BACR15ET()B()	5056-H32 AL, ANODIZED, UNIVERSAL HEAD, CLOSE TOLERANCE SHANK, 0.031 OVERSIZE	NO EQUIVALENT	NAS1242B
BACR15ET()D()	2017-T4 AL, ANODIZED, UNIVERSAL HEAD, CLOSE TOLERANCE SHANK, 0.031 OVERSIZE	NO EQUIVALENT	NAS1242D
			NAS1242DD
BACR15ET()DD()	2024-T4 AL, ANODIZED, UNIVERSAL HEAD, CLOSE TOLERANCE SHANK, 0.031 OVERSIZE	NO EQUIVALENT	NAS1242DD
BACR15FT()AD()	2117-T4 AL, ANODIZED, MODIFIED UNIVERSAL HEAD, CLOSE TOLERANCE SHANK	NO EQUIVALENT	BACR15BB()AD() [N]
			BACR15BB()AD()C [N]
			MS20470AD [N]
BACR15FT()D()	2017-T4 AL, ANODIZED, MODIFIED UNIVERSAL HEAD, CLOSE TOLERANCE SHANK	NO EQUIVALENT	BACR15BB()D() [N]
			BACR15BB()DD() [N]
			BACR15FT()KE()C
			MS20470D [N]
			MS20470DD [N]

RIVET - SOLID SHANK - PROTRUDING HEAD
TABLE II

Fastener Substitution - Rivets
Figure 1 (Sheet 4)

BOEING PROPRIETARY - Copyright © - Unpublished Work - See title page for details.

INITIAL FASTENER OR SPECIFIED REPAIR FASTENER		FASTENER SUBSTITUTION	
PART NUMBER	DESCRIPTION	EQUIVALENT	ALTERNATIVE
BACR15FT()DD()	2024-T4 AL, ANODIZED, MODIFIED UNIVERSAL HEAD, CLOSE TOLERANCE SHANK	NO EQUIVALENT	BACR15BB()DD() [N]
			BACR15DR()P() [E] [I] [J] [K]
			BACR15DR()PAC() [E] [I] [J]
			BACR15FT()KE()C [G] [J] [L]
			MS20470DD [N]
BACR15FT()KE()C	7050-T73 AL, CONVERSION COATED, MODIFIED UNIVERSAL HEAD, CLOSE TOLERANCE SHANK	NO EQUIVALENT	BACR15BB()DD() [N]
			BACR15FT()DD()
			MS20470DD [N]
MS20470A	1100-F AL, UNIVERSAL HEAD	BACR15BB()A()	BACR15FT()A()C
MS20470AD()-()	2117-T4 AL, ANODIZED, UNIVERSAL HEAD	BACR15BB()AD()	BACR15BB()AD()C
			BACR15FT()AD() [L]
MS20470B()-()	5056-H32 AL, ANODIZED, UNIVERSAL HEAD	BACR15BB()B()	BACR15FT()B()C
MS20470D()-()	2017-T4 AL, ANODIZED, UNIVERSAL HEAD	BACR15BB()D()	BACR15BB()D()C
			BACR15BB()DD()
			BACR15FT()D() [G] [L]
			BACR15FT()DD() [L]
			BACR15FT()KE()C [G] [L]
			MS20470DD
MS20470DD	2024-T4 AL, ANODIZED, UNIVERSAL HEAD	BACR15BB()DD()	BACR15FT()DD() [L]
MS20470E	7050-T73 AL, UNIVERSAL HEAD	NO EQUIVALENT	BACR15BB()DD()
			BACR15FT()KE()C [L]
			MS20470DD
MS20615()M	MONEL	BACR15DX()M()	NO ALTERNATIVE
NAS1198	A286 CRES	BACR15DX()-()	NO ALTERNATIVE

RIVET - SOLID SHANK - PROTRUDING HEAD
TABLE II

Fastener Substitution - Rivets
Figure 1 (Sheet 5)

BOEING PROPRIETARY - Copyright © - Unpublished Work - See title page for details.

INITIAL FASTENER OR SPECIFIED REPAIR FASTENER		FASTENER SUBSTITUTION	
PART NUMBER	DESCRIPTION	EQUIVALENT	ALTERNATIVE
BACR15AD()AD()	2117-T4 AL, ANODIZED, 100° HEAD, 0.031 OVERSIZE	NO EQUIVALENT	NAS1241AD
BACR15AD()DD()	2024-T4 AL, ANODIZED, 100° HEAD, 0.031 OVERSIZE	NO EQUIVALENT	NAS1241DD
BACR15AD()D()	2017-T4 AL, ANODIZED, 100° HEAD, 0.031 OVERSIZE	NO EQUIVALENT	NAS1241DD NAS1241D
BACR15AD()B()	5056-H32 AL, ANODIZED, 100° HEAD, 0.031 OVERSIZE	NO EQUIVALENT	NAS1241B
BACR15AZ()-()	ALLOY STEEL HI SHEAR 100° HEAD INTERFERENCE FIT 160 KSI	NO EQUIVALENT	F
BACR15BA()A()	1100F AL, ANODIZED, 100° HEAD, CLOSE TOLERANCE SHANK	MS20426A	BACR15DR()-() E I J K BACR15DR()AC() E I J
BACR15BA()A()C	1100-F AL, CONVERSION COATED, 100° PRECISION HEAD, CLOSE TOLERANCE SHANK	NO EQUIVALENT	BACR15DR()-() E I J K BACR15DR()AC() E I J
BACR15BA()AD()	2117-T4 AL, ANODIZED OR CONVERSION COATED, 100° PRECISION HEAD, CLOSE TOLERANCE SHANK	MS20426AD	BACR15BA()AD()C BACR15DR()AC() E I J BACR15DR()-() E I J K BACR15GE()CW() E I J
BACR15BA()AD()C	2117-T4 AL, CONVERSION COATED, 100° PRECISION HEAD, CLOSE TOLERANCE SHANK	NO EQUIVALENT	BACR15DR()-() E I J K BACR15DR()AC() E I J BACR15GE()CW() E I J

RIVET - SOLID SHANK - FLUSH HEAD
TABLE III

Fastener Substitution - Rivets
Figure 1 (Sheet 6)

BOEING PROPRIETARY - Copyright © - Unpublished Work - See title page for details.

INITIAL FASTENER OR SPECIFIED REPAIR FASTENER		FASTENER SUBSTITUTION	
PART NUMBER	DESCRIPTION	EQUIVALENT	ALTERNATIVE
BACR15BA()B()	5056F AL, ANODIZED, 100° HEAD, CLOSE TOLERANCE SHANK	NO EQUIVALENT	BACR15BA()AD() [E] BACR15BA()D() [E] MS20426AD [E] MS20426B [E] MS20426D [E]
BACR15BA()B()C	5056-H32 AL, CONVERSION COATED, 100° PRECISION HEAD, CLOSE TOLERANCE SHANK	NO EQUIVALENT	BACR15DR()-() [E] [I] [J] [K] BACR15DR()AC() [E] [I] [J]
BACR15BA()D()	2017-T3 AL, CONVERSION COATED, 100° PRECISION HEAD, CLOSE TOLERANCE SHANK	MS20426D	BACR15BA()D()C BACR15BA()DD() BACR15DR()-() [E] [I] [J] [K] BACR15DR()AC() [E] [I] [J] MS20426DD
BACR15BA()DD()	2024-T4 AL, ANODIZED, 100° PRECISION HEAD, CLOSE TOLERANCE SHANK	MS20426DD	BACR15DR()-() [E] [I] [J] [K] BACR15DR()AC() [E] [I] [J]
BACR15CE()AD()	2117-T4 AL, ANODIZED, 100° SHEAR HEAD	NO EQUIVALENT	BACR15BA()AD [A] MS20426AD [A] NAS1097AD
BACR15CE()B()	5056-H32 AL, ANODIZED, 100° SHEAR HEAD	NO EQUIVALENT	BACR15BA()B [A] MS20426B [A] NAS1097B
BACR15CE()D()	2017-T4 AL, CONVERSION COATED, 100° SHEAR HEAD	NO EQUIVALENT	BACR15BA()D() [A] BACR15BA()DD() [A] BACR15GF()D() MS20426D [A] MS20426DD [A] NAS1097D
BACR15CE()M()	MONEL, 100° SHEAR HEAD	NO EQUIVALENT	NAS1200M MS20427M [A] [O]

RIVET - SOLID SHANK - FLUSH HEAD
TABLE III

Fastener Substitution - Rivets
Figure 1 (Sheet 7)

BOEING PROPRIETARY - Copyright © - Unpublished Work - See title page for details.

INITIAL FASTENER OR SPECIFIED REPAIR FASTENER		FASTENER SUBSTITUTION	
PART NUMBER	DESCRIPTION	EQUIVALENT	ALTERNATIVE
BACR15DY()-()	A286 CRES 100° SHEAR HEAD CLOSE TOLERANCE SHANK	NO EQUIVALENT	NAS1200()-()
BACR15DY()M()	MONEL 100° SHEAR HEAD CLOSE TOLERANCE SHANK	NO EQUIVALENT	NAS1200M()-()
BACR15FH()AD()	2117-T4 AL, ANODIZED, MODIFIED, 82° HEAD (INDEX HEAD)	NO EQUIVALENT	[H]
BACR15FH()DD()	2024-T4 AL, ANODIZED, MODIFIED, 82° HEAD (INDEX HEAD)	NO EQUIVALENT	[H]
BACR15FH()KE()	7050-T73 AL, ANODIZED, MODIFIED 82° HEAD (INDEX HEAD)	NO EQUIVALENT	[H]
BACR15GF()D()	2017-T4 AL, CONVERSION COATED, 100° PRECISION SHEAR HEAD	NO EQUIVALENT	BACR15CE()D() [P]
BACR15GH()KE()	7050-T73 AL, ANODIZED, INDEX HEAD	NO EQUIVALENT	[H]
MS20427M()	MONEL, 100° HEAD	NO EQUIVALENT	BACR15GE()C() [E] [I] [J]
MS20427M()C()	MONEL, CADMIUM PLATED, 100° HEAD	NO EQUIVALENT	BACR15GE()CW() [E] [I] [J]
MS20426AD	2117-T4 AL, ANODIZED, 100° HEAD	BACR15BA()AD()	BACR15BA()AD()C
			MS20426AD
MS20426DD	2024-T4 AL, ANODIZED, 100° HEAD	BACR15BA()DD()	BACR15DR()-() [E] [I] [J] [K] BACR15DR()AC() [E] [I] [J]
MS20426D()-()	2017-T4 AL, ANODIZED, 100° HEAD	BACR15BA()D()	BACR15BA()D()C
			BACR15BA()DD
			MS20426DD

RIVET - SOLID SHANK - FLUSH HEAD
TABLE III

Fastener Substitution - Rivets
Figure 1 (Sheet 8)

BOEING PROPRIETARY - Copyright © - Unpublished Work - See title page for details.

INITIAL FASTENER OR SPECIFIED REPAIR FASTENER		FASTENER SUBSTITUTION	
PART NUMBER	DESCRIPTION	EQUIVALENT	ALTERNATIVE
MS20426A	1100-F, 100° HEAD	BACR15BA()A()	BACR15DR()-() E I J K
MS20426B	5056-H32 AL, ANODIZED, 100° HEAD	BACR15BA()B()	BACR15DR()AC() E I J
BACR15FV()KE()	7050-T73 AL, ANODIZED OR CONVERSION COATED, 120° MODIFIED SHEAR HEAD	MS14218E()-()	NO ALTERNATIVE
MS14218E()-()	7050-T73 AL, ANODIZED OR CONVERSION COATED, 120° FLUSH INTERFERENCE SHEAR HEAD	BACR15FV()KE()	NO ALTERNATIVE

RIVET - SOLID SHANK - FLUSH HEAD
TABLE III

Fastener Substitution - Rivets
Figure 1 (Sheet 9)

BOEING PROPRIETARY - Copyright © - Unpublished Work - See title page for details.

INITIAL FASTENER OR SPECIFIED REPAIR FASTENER		FASTENER SUBSTITUTION	
PART NUMBER	DESCRIPTION	EQUIVALENT	ALTERNATIVE
BACR15DA()-()	5056-F AL BLIND SELF PLUGGING	NO EQUIVALENT	BACR15FR()E()R
			NAS1398B()-()
			NAS1738B()-()
			NAS1738E()-()
BACR15DA()H()	5056-F AL BLIND-PULL THRU	NO EQUIVALENT	BACR15FR()E()R
			MS20604B()T()
			MS20604B()W()
			NAS1398B()-()
			NAS1738B()-()
			NAS1738E()-()
BACR15DR()P()	NONSTRUCTURAL (PULL THRU TYPE), C1018 STEEL SLEEVE, CAD PLATED, MAX TEMP 450°F (232°C), UNIVERSAL HEAD	NO EQUIVALENT	BACR15BB()D [D]
			BACR15DR()PAC()
			BACR15FT()D() [D]
			MS20470D [D]
BACR15EB-P()-()	BULBED CHERRYLOCK, SELF-PLUGGING, 5056 AL SLEEVE. MAX TEMP 250°F (121°C)	NO EQUIVALENT	BACR15FR()E()R
			NAS1738E
			NAS1738MW
BACR15FR()E()R	CHERRY-MAX SYSTEM, CRES STEM, 5056 AL SLEEVE, LOCKED SPINDLE-BULBED, MAX TEMP 250°F	ALLFAST AF3253-()-()B CHERRY CR3253-()-() HUCK HR3253-()-()	NO ALTERNATIVE
CHERRY CR6253-()-()	CHERRY SST, 5056 AL SLEEVE, A-286 CRES STEM, A-286 CRES LOCK COLLAR, UNIVERSAL HEAD, OVERSIZED DIAMETER, MAX TEMP 250°F	NO EQUIVALENT	NO ALTERNATIVE
NAS1398B()-() [C]	5056 AL SLEEVE, LOCKED SPINDLE, PARTIAL SERRATED STEM, MAX TEMP 250°F, UNIVERSAL HEAD	CHERRY CR2263-()-() ALLFAST AF2050-()-()	NAS1398D()-() [C] [E]
			NAS398D()A() [C] [E]
			NAS1738E [B]
			BACR15FR()E() [B]
			BACR15FR()E()R [B]
			NAS1738B [B]

RIVET - BLIND - PROTRUDING HEAD
TABLE IV

Fastener Substitution - Rivets
Figure 1 (Sheet 10)

BOEING PROPRIETARY - Copyright © - Unpublished Work - See title page for details.

INITIAL FASTENER OR SPECIFIED REPAIR FASTENER		FASTENER SUBSTITUTION	
PART NUMBER	DESCRIPTION	EQUIVALENT	ALTERNATIVE
NAS1398B()A() [C]	5056 AL SLEEVE, LOCKED SPINDLE, FULL SERRATED STEM, MAX TEMP 250°F	CHERRY CR2273-()-() ALLFAST RV1250-()-()	BACR15FR()E() [B] BACR15FR()E()R [B] NAS1398B()-() [C] NAS1398D()-() [C] [E] NAS1398D()A() [C] [E] NAS1738B [B] NAS1738E [B]
NAS1398C()-() [C]	A-286 CRES SLEEVE, LOCKED SPINDLE, PARTIAL SERRATED STEM, MAX TEMP 1200°F	CHERRY CR2663-()-() ALLFAST AF2040-()-()	NAS1398C()A() [C]
NAS1398C()A() [C]	A-286 CRES SLEEVE, LOCKED SPINDLE, FULL SERRATED STEM, MAX TEMP 1200°F (649°C)	CHERRY CR2673-()-() ALLFAST RV1240-()-()	NAS1398C()-() [C]
NAS1398CW()-() [C]	A-286 CRES SLEEVE, CADMIUM PLATED, LOCKED SPINDLE, PARTIAL SERRATED STEM, MAX TEMP 450°F (232°C)	ALLFAST AF2040W-()-() CHERRY CR2663CW-()-()	NAS1398CW()A() [C]
NAS1398CW()A() [C]	A-286 CRES SLEEVE, CADMIUM PLATED, LOCKED SPINDLE, FULL SERRATED STEM, MAX TEMP 450°F (232°C)	CHERRY CR2673CW-()-() ALLFAST RV1240W-()-()	NAS1398CW()-() [C]
NAS1398D()-() [C]	2017 AL SLEEVE, LOCKED SPINDLE, PARTIAL SERRATED STEM, MAX TEMP 250°F (121°C)	ALLFAST AF2000-()-() CHERRY CR2163-()-()	BACR15FR()E() [B] BACR15FR()E()R [B] NAS1398D()A() [C] NAS1738B [B] NAS1738E [B]
NAS1398D()A() [C]	2017 AL SLEEVE, LOCKED SPINDLE, FULL SERRATED STEM, MAX TEMP 250°F (121°C)	ALLFAST RV1200-()-() CHERRY CR2173-()-()	BACR15FR()E() [B] BACR15FR()E()R [B] NAS1398D()-() [C] NAS1738B [B] NAS1738E [B]

RIVET - BLIND - PROTRUDING HEAD
TABLE IV

Fastener Substitution - Rivets
Figure 1 (Sheet 11)

BOEING PROPRIETARY - Copyright © - Unpublished Work - See title page for details.

INITIAL FASTENER OR SPECIFIED REPAIR FASTENER		FASTENER SUBSTITUTION	
PART NUMBER	DESCRIPTION	EQUIVALENT	ALTERNATIVE
NAS1398M()-() C	MONEL SLEEVE, LOCKED SPINDLE, PARTIAL SERRATED STEM, MAX TEMP 900°F (482°C)	ALLFAST AF2090M-()-() CHERRY CR2563M-()-()	BACR15FR()M() B BACR15FR()M()R B NAS1398M()A() C NAS1738M B
NAS1398M()A() C	MONEL SLEEVE, LOCKED SPINDLE, FULL SERRATED STEM, MAX TEMP 900°F (482°C)	ALLFAST RV1290M-()-() CHERRY CR2573-()-()	BACR15FR()M() B BACR15FR()M()R B NAS1398M()-() C NAS1738M B
NAS1398MW()-() C	MONEL SLEEVE, CADMIUM PLATED, LOCKED SPINDLE, PARTIAL SERRATED STEM, MAX TEMP 450°F (232°C)	ALLFAST AF2090W-()-() CHERRY CR2563-()-()	NAS1398MW()A() C NAS1738MW B
NAS1398MW()A() C	MONEL SLEEVE, CADMIUM PLATED, LOCKED SPINDLE, FULL SERRATED STEM, MAX TEMP 450°F (232°C)	ALLFAST RV1290-()-() CHERRY CR2573P-()-()	NAS1398MW()-() C NAS1738MW B
NAS1738B()-()	5056 AL SLEEVE, MECHANICALLY LOCKED SPINDLE, BULBED, MAX TEMP 250°F, UNIVERSAL HEAD	CHERRY CR2249-()-()	NAS1738E BACR15FR()E BACR15FR()E()R
NAS1738C	INCONEL 600 SLEEVE, MECHANICALLY LOCKED SPINDLE, BULBED, MAX TEMP 250°F (121°C), UNIVERSAL HEAD	CHERRY CR2839-()-()	NO ALTERNATIVE
NAS1738E()-()	5056 AL SLEEVE, MECHANICALLY LOCKED SPINDLE, BULBED, MAX TEMP 250°F (121°C)	CHERRY CR2239-()-() ALLFAST AF2550-()-()	BACR15FR()E() BACR15FR()E()R
NAS1738M()-()	MONEL SLEEVE, MECHANICALLY LOCKED SPINDLE, BULBED, MAX TEMP 900°F (482°C)	CHERRY CR2539-()-() ALLFAST AF2290-()-()	BACR15FR()M() BACR15FR()M()R
NAS1738MW()-()	MONEL SLEEVE, MECHANICALLY LOCKED SPINDLE, BULBED, MAX TEMP 450°F (232°C)	CHERRY CR2539P-()-() ALLFAST AF2290W-()-()	BACR15FR()MP() M

RIVET - BLIND - PROTRUDING HEAD
TABLE IV

Fastener Substitution - Rivets
Figure 1 (Sheet 12)

BOEING PROPRIETARY - Copyright © - Unpublished Work - See title page for details.

INITIAL FASTENER OR SPECIFIED REPAIR FASTENER		FASTENER SUBSTITUTION	
PART NUMBER	DESCRIPTION	EQUIVALENT	ALTERNATIVE
BACR15DA()C()	5056-F BLIND 100° HEAD SELF PLUGGING	NO EQUIVALENT	BACR15FP()E()R
			NAS1399B()-()
			NAS1739B()-()
			NAS1739E()-()
BACR15DA()CH()	5056-F BLIND 100° HEAD PULL THRU	NO EQUIVALENT	BACR15FP()E()R
			NAS1399B()-()
			NAS1739B()-()
			NAS1739E()-()
			MS20605B()T()
			MS20605B()W()
BACR15DR()-()	NON-STRUCTURAL (PULL THRU TYPE), C1018 STEEL SLEEVE, CADMIUM PLATED, 100° HEAD, MAX TEMP 450°F (232°C)	CHERRY CCR264SS-()-() ALLFAST AF5171-()-()	BACR15BA()AD()C [D]
			BACR15BA()D()C [D]
			BACR15DR()AC()
			BACR15GE()CW()
BACR15EB()-()	BULBED CHERRYLOCK, SELF-PLUGGING, 5056 AL SLEEVE. MAX TEMP 250°F (121°C)	NO EQUIVALENT	BACR15FP()E()R
			NAS1739E
			NAS1739MW
			NAS1739B
BACR15FP()E()R	CHERRY-MAX SYSTEM, 5056 AL SLEEVE, CADMIUM PLATED, 100° HEAD, MAX TEMP 250°F (121°C)	ALLFAST AF3252-()-()B CHERRY CR3252-()-() HUCK HR3252-()-()	NO ALTERNATIVE
NAS1399B()A() [C]	5056 AL SLEEVE, LOCKED SPINDLE, 100° HEAD, FULL SERRATED STEM, MAX TEMP 250°F (121°C)	CHERRY CR2272-()-() ALLFAST RV1251-()-() CHERRY CR2262-()-()	BACR15FP()E() [B]
			BACR15FP()E()R [B]
			NAS1399B()-() [C]
			NAS1399D()-() [C] [E]
			NAS1399D()A() [C] [E]
			NAS1739B [B]
			NAS1739E [B]
NAS1399B()-() [C]	5056 AL SLEEVE, LOCKED SPINDLE, 100° HEAD, PARTIAL SERRATED STEM, MAX TEMP 250°F (121°C)	CHERRY CR2262-()-() ALLFAST AF2051-()-() VOI-SHAN CR9262-()A()	BACR15FP()E() [B]
			BACR15FP()E()R [B]
			NAS1399B()A() [C]
			NAS1399D()-() [C] [E]
			NAS1399D()A() [C] [E]
			NAS1739B [B]
			NAS1739E [B]

RIVET - BLIND - FLUSH HEAD
TABLE V

Fastener Substitution - Rivets
Figure 1 (Sheet 13)

BOEING PROPRIETARY - Copyright © - Unpublished Work - See title page for details.

INITIAL FASTENER OR SPECIFIED REPAIR FASTENER		FASTENER SUBSTITUTION	
PART NUMBER	DESCRIPTION	EQUIVALENT	ALTERNATIVE
NAS1399C()-()	A-286 CRES SLEEVE, LOCKED SPINDLE, 100° HEAD, PARTIAL SERRATED STEM, MAX TEMP 250°F	CHERRY CR2662-()-() ALLFAST AF2041-()-()	NAS1399C()A()
NAS1399C()A() C	A-286 CRES SLEEVE, LOCKED SPINDLE, 100° HEAD, FULL SERRATED STEM, MAX TEMP 1200°F	CHERRY CR2672-()-() ALLFAST RV1241-()-() CHERRY CR2662-()-()	NAS1399C()-() C
NAS1399CW()-() C	A-286 CRES SLEEVE, CAD PLATED, LOCKED SPINDLE, 100° HEAD, PARTIAL SERRATED STEM, MAX TEMP 450°F	ALLFAST AF2041W-()-() CHERRY CR2662CW-()-()	NAS1399CW()A() C
NAS1399CW()A() C	A-286 CRES SLEEVE, CADMIUM PLATED, LOCKED SPINDLE, 100° HEAD, FULL SERRATED STEM, MAX TEMP 450°F	CHERRY CR2672CW-()-() ALLFAST RV1241W-()-() CHERRY CR2662W-()-()	NAS1399CW()-() C
NAS1399D()-() C	2017 AL SLEEVE, LOCKED SPINDLE, 100° HEAD, PARTIAL SERRATED STEM, MAX TEMP 250°F	CHERRY CR2162-()-() ALLFAST AF2001W-()-() VOI-SHAN CR9162-()A()	BACR15FP()E() B BACR15FP()E()R B NAS1399D()A() C NAS1739B B NAS1739E B
NAS1399D()A() C	2017 AL SLEEVE, LOCKED SPINDLE, 100° HEAD, FULL SERRATED STEM, MAX TEMP 250°F	CHERRY CR2172-()-() ALLFAST RV1201-()-() CHERRY CR2162-()-() VOI-SHAN CR9162-()A()	BACR15FP()E() B BACR15FP()E()R B NAS1739B()-() B NAS1399D()-() C NAS1739E()-() B
NAS1399M()-() C	MONEL SLEEVE, LOCKED SPINDLE, 100° HEAD, PARTIAL SERRATED STEM, MAX TEMP 900°F	CHERRY CR2562M-()() ALLFAST AF2091-()-()	BACR15FP()M() B BACR15FP()M()R B NAS1399M()A() C NAS1739M B

RIVET - BLIND - FLUSH HEAD
TABLE V

Fastener Substitution - Rivets
Figure 1 (Sheet 14)

BOEING PROPRIETARY - Copyright © - Unpublished Work - See title page for details.

INITIAL FASTENER OR SPECIFIED REPAIR FASTENER		FASTENER SUBSTITUTION	
PART NUMBER	DESCRIPTION	EQUIVALENT	ALTERNATIVE
NAS1399M()A() [C]	MONEL SLEEVE, LOCKED SPINDLE, 100° HEAD, FULL SERRATED STEM, MAX TEMP 900°F	CHERRY CR2572-()-() ALLFAST RV1291M-()-() CHERRY CR2562M-()-()	BACR15FP()M() [B] BACR15FP()M()R [B] NAS1399M()-() [C] NAS1739M [B]
NAS1399MW()-() [C]	MONEL SLEEVE, CADMIUM PLATED, LOCKED SPINDLE, 100° HEAD, PARTIAL SERRATED STEM, MAX TEMP 450°F	CHERRY CR2562-()-() ALLFAST AF2091W-()-()	NAS1739MW [B] NAS1399MW()A() [C]
NAS1399MW()A() [C]	MONEL SLEEVE, CADMIUM PLATED, LOCKED SPINDLE, 100° HEAD, FULL SERRATED STEM, MAX TEMP 450°F	ALLFAST RV1291-()-() CHERRY CR2572P-()-() CHERRY CR2562-()-()	NAS1399MW()-() [C] NAS1739MW [B]
NAS1739B	5056 AL SLEEVE, 100° HEAD, MECHANICALLY LOCKED SPINDLE, BULBED, MAX TEMP 250°F	CHERRY CR2248-()-()	BACR15FP()E() BACR15FP()E()R NAS1739E
NAS1739C	INCONEL 600 SLEEVE, 100° HEAD, MECHANICALLY LOCKED SPINDLE, BULBED	CHERRY CR2838-()-()	NO ALTERNATIVE
NAS1739E()-()	5056 AL SLEEVE, 100° HEAD, MECHANICALLY LOCKED SPINDLE, BULBED, MAX TEMP 250°F	ALLFAST AF2551()-() CHERRY CR2238()-() CHERRY CR3252-()-() BACR15FP()E()	BACR15FP()E() BACR15FP()E()R
NAS1739M	MONEL SLEEVE, 100° HEAD, MECHANICALLY LOCKED SPINDLE, BULBED, MAX TEMP 900°F	ALLFAST AF2291-()-() CHERRY CR2538-()-()	BACR15FP()M() BACR15FP()M()R
NAS1739MW	MONEL SLEEVE, CADMIUM PLATED, 100° HEAD, MECHANICALLY LOCKED SPINDLE, BULBED, MAX TEMP 450°F	ALLFAST AF2291W-()-() CHERRY CR2538P-()-()	BACR15FP()MP() [M]

RIVET - BLIND - FLUSH HEAD
TABLE V

Fastener Substitution - Rivets
Figure 1 (Sheet 15)

BOEING PROPRIETARY - Copyright © - Unpublished Work - See title page for details.

INITIAL FASTENER OR SPECIFIED REPAIR FASTENER		FASTENER SUBSTITUTION	
PART NUMBER	DESCRIPTION	EQUIVALENT	ALTERNATIVE
BACR15BD()AD()	2117-T4 AL, ANODIZED	NO EQUIVALENT	H
BACR15BD()DD()	2024-T4 AL, ANODIZED	NO EQUIVALENT	H
BACR15GG()KE()	7050-T73 AL, ANODIZED	NO EQUIVALENT	H

RIVETS - SLUG
TABLE VI

Fastener Substitution - Rivets
Figure 1 (Sheet 16)

BOEING PROPRIETARY - Copyright © - Unpublished Work - See title page for details.

NOTES

- REFER TO TABLE I FOR THE FASTENER SUBSTITUTION INDEX.
- REFER TO SRM 51-30-2 FOR THE REMOVAL AND THE INSTALLATION OF FASTENERS.
- THE SHEAR AND TENSION TYPE FASTENERS USE DIFFERENT TORQUE VALUES AND INSTALLATION TOOLS. REFER TO SRM 51-30-4.
- REFER TO SRM 51-10-2 FOR THE NECESSARY PROTECTIVE TREATMENT FOR FASTENER INSTALLATION.
- DO NOT USE CADMIUM PLATED FASTENERS IN TITANIUM OR GRAPHITE (CARBON FIBER) STRUCTURE.

[A] DO NOT USE ALLOY STEEL FASTENERS AS AN ALTERNATIVE FOR THE CORROSION RESISTANT STEEL (CRES) OR TITANIUM FASTENERS IN:

- AREAS WHERE ANTI-MAGNETIC FASTENERS ARE NECESSARY
- GRAPHITE (CARBON FIBER) STRUCTURE
- CRES STRUCTURE.

[B] THESE BOLTS MUST HAVE A HOLE WITH A LARGER FILLET RELIEF UNDER THE BOLT HEAD. REFER TO SRM 51-30-5.

USE THESE FASTENERS ONLY IF THERE IS NOT A HEIGHT LIMIT ON THE FASTENER HEAD.

[C] ASK THE BOEING COMPANY FOR FASTENER ALTERNATIVES.

[D] A WASHER WITH A COUNTERBORE THAT IS EQUIVALENT TO THE COUNTERBORE OF THE COLLAR MUST BE USED ON THE NUT SIDE IF NUTS ARE USED. NUTS CAN BE USED AS AN ALTERNATIVE FOR THE HEX-DRIVE BOLT COLLARS.

[E] WHEN A H-11 STEEL BOLT IS REMOVED FOR ANY REASON, ALWAYS REPLACE THE BOLT WITH AN ALTERNATIVE FASTENER.

[F] THESE FASTENERS ARE PERMITTED ONLY IN CLOSE REAM OR LARGER HOLES (NON-INTERFERENCE HOLES).

[G] WHEN A PH13-8Mo CRES BOLT IS REMOVED FOR ANY REASON, ALWAYS REPLACE THE BOLT WITH AN ALTERNATIVE FASTENER.

[H] WHEN A CADMIUM PLATED TITANIUM BOLT IS REMOVED FOR ANY REASON, ALWAYS REPLACE THE BOLT WITH AN ALTERNATIVE FASTENER.

[I] THIS FASTENER IS NOT PERMITTED IN AREAS WHERE THE TEMPERATURE IS MORE THAN 350°F (177°C).

THIS FASTENER IS NOT PERMITTED IN AREAS WHERE ELECTRICAL CONDUCTIVITY IS REQUIRED AS GIVEN IN BAC5117.

[J] THIS FASTENER IS ONLY PERMITTED IN METAL-TO-METAL ASSEMBLIES. DO NOT USE THESE FASTENERS IN COMPOSITE-TO-COMPOSITE OR COMPOSITE-TO-METAL ASSEMBLIES.

[K] THIS FASTENER IS NOT PERMITTED IN AREAS WHERE THE TEMPERATURE IS MORE THAN 450°F (232°C).

[L] THE RECOMMEND FASTENERS IN ALUMINUM STRUCTURE ARE ALUMINUM PIGMENT (BMS 10-85) COATED TITANIUM, ALUMINUM PIGMENT (BMS 10-85) COATED A286, OR CADMIUM PLATED A286.

NOTE: THE CADMIUM-PLATED ALLOY STEEL FASTENERS ARE PERMITTED AS A STRUCTURAL ALTERNATIVE.

HOWEVER, AN ALLOY-STEEL FASTENER, AND THE ADJACENT ALUMINUM STRUCTURE TOGETHER CAN CAUSE CORROSION.

THEREFORE, THESE FASTENERS, THE EQUIVALENT, AND THE ALTERNATIVE MUST BE INSTALLED WET WITH THE CORRECT SEALANT.

BOEING RECOMMENDS THAT YOU APPLY TWO COATS OF BMS 10-79 TYPE III PRIMER ON THE FASTENER HEAD.

[M] DO NOT USE CADMIUM PLATED FASTENERS AS AN ALTERNATIVE FOR BARE OR ALUMINUM COATED FASTENERS WHEN YOU INSTALL FASTENERS THROUGH THE MATERIALS THAT FOLLOW:

- TITANIUM STRUCTURE
- GRAPHITE (CARBON FIBER) STRUCTURE.

[N] THIS FASTENER IS PERMITTED FOR FASTENERS THAT ARE 0.625 INCH OR LESS IN DIAMETER.

[O] THESE COLLARS CAN BE USED ON SURFACES THAT HAVE A SLOPE OF 7 DEGREES (OR LESS) ANGLE.

[P] THE PART WITH D-CODE (DRIVE NUT) IS RECOMMENDED.

[Q] ALLOY STEEL FASTENERS MUST BE REPLACED WITH ALLOY STEEL FASTENERS WHEN YOU ATTACH A SENSOR TARGET TO THE TARGET MOUNTING BRACKET AT CYLINDRICAL PROXIMITY SENSOR INSTALLATIONS.

[R] A WASHER IS NECESSARY FOR THIS TYPE OF INSTALLATION. REFER TO SRM 51-30-2.

[S] SUBSTITUTION IS PERMITTED FOR 0.3125 AND 0.375 DIAMETER FASTENERS ONLY.

[T] THE FASTENER MUST BE INSTALLED WITH TORQUE CONTROLLED TOOLING. REFER TO SRM 51-30-4.

[U] THIS FASTENER IS NOT PERMITTED IN AREAS WHERE THE TEMPERATURE IS MORE THAN 600°F (316°C).

Fastener Substitution - Bolts
Figure 2 (Sheet 1)

BOEING PROPRIETARY - Copyright © - Unpublished Work - See title page for details.

NOTES (CONTINUED)

[V] THIS SUBSTITUTION IS PERMITTED ONLY IF THE DIAMETER OF THE FASTENER IS 4 THRU 10.

[W] SUBSTITUTION IS NOT PERMITTED WHERE RE-TORQUING OF THE FASTENER IS NECESSARY.

[X] USE THE SAME NUT OR COLLAR THAT WAS USED ON THE INITIAL OR SPECIFIED REPAIR FASTENER.

[Y] APPLICABLE ONLY FOR DIAMETERS THAT ARE 0.250 INCH AND LARGER.

[Z] WHEN YOU REMOVE ALLOY STEEL BOLTS THAT HAVE A LAYER OF BMS 10-85 (NOT CAD PLATED) APPLIED, ALWAYS REPLACE THEM WITH AN ALTERNATIVE FASTENER.

[AA] THE MAXIMUM TEMPERATURE GIVEN IN THE DESCRIPTION IS FOR THE BOLT ONLY. THE MAXIMUM TEMPERATURE APPLICATION FOR THE BOLT/COLLAR COMBINATION MAY BE LESS, IF THERE ARE LIMITS PUT ON THE COLLAR.

THE FOLLOWING GUIDELINES ARE APPLICABLE TO THE COLLARS:

- ALUMINUM COLLARS HAVE A MAXIMUM TEMPERATURE OF 250°F (171°C)
- CADMIUM PLATED CRES COLLARS HAVE A MAXIMUM TEMPERATURE OF 450°F (232°C)
- UNPLATED CRES COLLARS HAVE A MAXIMUM TEMPERATURE OF 900°F (482°C)
- MONEL COLLARS HAVE A MAXIMUM TEMPERATURE OF 900°F (482°C).

Fastener Substitution - Bolts
Figure 2 (Sheet 2)

BOEING PROPRIETARY - Copyright © - Unpublished Work - See title page for details.

TYPE OF FASTENER	LOCATION OF FASTENER	
	TABLE NUMBER	SHEET NUMBERS
BOLT - HEX DRIVE - PROTRUDING HEAD (SHEAR)	TABLE II	4 THRU 12
BOLT - HEX DRIVE - FLUSH HEAD (SHEAR)	TABLE III	13 THRU 24
BOLT - HEX DRIVE - PROTRUDING HEAD (TENSION)	TABLE IV	25 THRU 29
BOLT - HEX DRIVE - FLUSH HEAD (TENSION)	TABLE V	30 THRU 34
BOLT - EXTERNAL WRENCHING - PROTRUDING HEAD	TABLE VI	35 THRU 48
BOLT - RECESS DRIVE - FLUSH HEAD	TABLE VII	49 THRU 56
BOLT - RECESS DRIVE - PROTRUDING HEAD	TABLE VIII	57 THRU 59
BOLT - BLIND - PROTRUDING HEAD	TABLE IX	60 THRU 61
BOLT - BLIND - FLUSH HEAD	TABLE X	62 THRU 64
BOLT - TAPER SHANK - PROTRUDING HEAD	TABLE XI	65 THRU 67

BOLT FASTENER SUBSTITUTION INDEX
TABLE I

Fastener Substitution - Bolts
Figure 2 (Sheet 3)

BOEING PROPRIETARY - Copyright © - Unpublished Work - See title page for details.

INITIAL FASTENER OR SPECIFIED REPAIR FASTENER			FASTENER SUBSTITUTION		
PART NUMBER	DESCRIPTION	MATING PART	EQUIVALENT	ALTERNATIVE	MATING PART
BACB30FM()-() [Q] [AA]	ALLOY STEEL, CADMIUM PLATED, 95 KSI SHEAR, CETYL ALCOHOL LUBRICATED, MAX TEMP 450°F (232°C)	BACC30AG()	HI-SHEAR HL18PB	BACB30FM()A()	BACC30AG()
			SPS HL18PB	BACB30MY()K() [I]	BACC30AG()
			HUCK HL18PB	BACB30VN()K() [I]	BACC30BK()
			FAIRCHILD HL18PB	BACB30VT()K() [I]	BACC30BQ()
		BACC30M()	DEUTSCH HL18PB	BACB30FM()A() [I]	BACC30M()
			AIC HL18PB	BACB30MY()K() [I]	BACC30M()
			WEST COAST HL18PB	BACB30VT()K() [I]	BACC30BL()
					BACN10YZ() [T]
					BACN10ZV() [T]
BACB30FM()A() [AA]	A-286 CRES, CADMIUM PLATED, 95 KSI SHEAR, CETYL ALCOHOL LUBRICATED, MAX TEMP 450°F (232°C)	BACC30AB()C	HI-SHEAR HL440UC	BACB30MY()K() [I]	BACC30AB()C
			SPS HL440UC	BACB30VT()K() [I]	BACC30BS()
		BACC30AB()S	HUCK HL440UC	BACB30MY()K() [I]	BACC30AB()S
			FAIRCHILD HL440UC	BACB30VT()K() [I]	BACC30BS()S
		BACC30AG()	DEUTSCH HL440UC	BACB30MY()K() [I]	BACC30AG()
			AIC HL440UC	BACB30VT()K() [I]	BACC30BQ()
		BACC30M()	WEST COAST HL440UC	BACB30MY()K() [I]	BACC30M()
				BACB30VT()K() [I]	BACC30BL()
BACB30FM()A()SU [AA]	A286 CRES, PASSIVATED, 95 KSI SHEAR, DRY FILM LUBRICATED, MAX TEMP 450°F (232°C)	BACC30AB()S	HI-SHEAR HL40DU	BACB30FM()A()U	BACC30AB()S
			SPS HL40DU	BACB30MB()A()SU	BACC30AB()S
			HUCK HL40DU	BACB30MB()A()U	BACC30AB()S
			DEUTSCH HL40DU		
			FAIRCHILD HL40DU		
			AIC HL40DU		
			WEST COAST HL40DU		

BOLT - HEX DRIVE - PROTRUDING HEAD (SHEAR)
TABLE II

Fastener Substitution - Bolts
Figure 2 (Sheet 4)

BOEING PROPRIETARY - Copyright © - Unpublished Work - See title page for details.

INITIAL FASTENER OR SPECIFIED REPAIR FASTENER			FASTENER SUBSTITUTION		
PART NUMBER	DESCRIPTION	MATING PART	EQUIVALENT	ALTERNATIVE	MATING PART
BACB30FM()A()U [AA]	A286 CRES, PASSIVATED, 95 KSI SHEAR, CETYL ALCOHOL LUBRICATED, MAX TEMP 900°F (482°C)	BACC30AB()P	HI-SHEAR HL40 SPS HL40 HUCK HL40 FAIRCHILD HL40 DEUTSCH HL40 AIC HL40 WEST COAST HL40	BACB30MB()A()U	BACC30AB()P
		BACC30AB()S		BACC30MB()A()U	BACC30AB()S
BACB30FM()AK() [AA]	A-286 CRES, ALUMINUM PIGMENTED COATING, 95 KSI SHEAR, CETYL ALCOHOL LUBRICATED, MAX TEMP 350°F (177°C)	BACC30AB()S	HI-SHEAR HL440AZ SPS HL440AZ HUCK HL440AZ FAIRCHILD HL440AZ DEUTSCH HL440AZ AIC HL440AZ WEST COAST HL440AZ	BACB30MY()K()	BACC30AB()S
		BACC30M()		BACB30MY()K()	BACC30M() BACN10XJ() [T]
BACB30FM()K() [Q] [Z] [AA]	ALLOY STEEL, ALUMINUM PIGMENTED COATING, 95 KSI SHEAR, CETYL ALCOHOL LUBRICATED, MAX TEMP 350°F (177°C)	BACC30M()	NO EQUIVALENT	BACB30FM()-() [L] [M]	BACC30M() BACN10XJ() [T]
				BACB30MY()K()	BACC30M() BACN10XJ() [T]
				BACB30VT()K()	BACC30BL() BACN10YZ() [T]
				BACB30FM()AK()	BACC30M() BACN10XJ() [T]
		BACC30AG()	NO EQUIVALENT	BACB30FM()-() [L] [M]	BACC30AG() BACN10ZZ()D [T]
				BACB30MY()K()	BACC30AG() BACN10ZZ()D [T]
				BACB30VT()K()	BACC30BQ()
				BACB30FM()AK()	BACC30AG() BACN10ZZ()D [T]

BOLT - HEX DRIVE - PROTRUDING HEAD (SHEAR)
TABLE II

Fastener Substitution - Bolts
Figure 2 (Sheet 5)

BOEING PROPRIETARY - Copyright © - Unpublished Work - See title page for details.

INITIAL FASTENER OR SPECIFIED REPAIR FASTENER			FASTENER SUBSTITUTION		
PART NUMBER	DESCRIPTION	MATING PART	EQUIVALENT	ALTERNATIVE	MATING PART
BACB30GZ()-() [AA]	7075-T6 AL, ANODIZED, 44.5 KSI SHEAR, CETYL ALCOHOL LUBRICATED, MAX TEMP 250°F (121°C)	BACC30P	HI-SHEAR HL22 FAIRCHILD HL22 WEST COAST HL22	NO ALTERNATIVE	
BACB30MY()C() [H] [AA]	6AL-4V TITANIUM CADMIUM PLATED, 95 KSI SHEAR, CETYL ALCOHOL LUBRICATED, MAX TEMP 450°F (232°C)	BACC30AB()C	NO EQUIVALENT	BACB30FM()AK() [I]	BACB30AB()C
					BACN10YT()CD [T]
				BACB30MB()AK() [I]	BACC30X()
					BACN10BH()
					BACN10YT()CD [T]
				BACB30MY()K() [I]	BACC30AB()C
					BACN10YT()CD [T]
				BACB30NX()K() [I]	BACC30BH()
					BACC30X()
					BACN10YT()CD [T]
				BACB30VT()K() [I]	BACC30BS()
		BACC30AG()		BACB30FM()-() [A] [L]	BACC30AG()
					BACN10ZZ()D [T]
				BACB30FM()A()	BACC30AG()
					BACN10ZZ()D [T]
				BACB30FM()AK() [I]	BACC30AG()
					BACN10ZZ()D [T]
				BACB30MY()K() [I]	BACC30AG()
					BACN10ZZ()D [T]
				BACB30VN()K() [I] [J]	BACC30BK()
				BACB30VT()K() [I]	BACC30BQ()

BOLT - HEX DRIVE - PROTRUDING HEAD (SHEAR)
TABLE II

Fastener Substitution - Bolts
Figure 2 (Sheet 6)

BOEING PROPRIETARY - Copyright © - Unpublished Work - See title page for details.

INITIAL FASTENER OR SPECIFIED REPAIR FASTENER			FASTENER SUBSTITUTION		
PART NUMBER	DESCRIPTION	MATING PART	EQUIVALENT	ALTERNATIVE	MATING PART
BACB30MY()C() [H] [AA]	6AL-4V TITANIUM, CADMIUM PLATED, 95 KSI SHEAR, CETYL ALCOHOL LUBRICATED, MAX TEMP 450°F (232°C)	BACC30M()	NO EQUIVALENT	BACB30FM()-() [A] [L]	BACC30AB()C
					BACC30AG()
					BACC30M()
					BACN10XJ() [T]
					BACN10YT()CD [T]
					BACN10ZZ()D [T]
				BACB30FM()A()	BACC30AB()C
					BACC30AG()
					BACC30M()
					BACN10XJ() [T]
					BACN10ZZ()D [T]
				BACB30FM()AK() [I]	BACC30AB()C
					BACC30AG()
					BACC30M()
					BACN10XJ() [T]
					BACN10YT()CD [T]
					BACN10ZZ()D [T]
				BACB30GW()A()	BACC30K()
					NAS1080E
				BACB30MB()-()	BACC30BH()
					BACC30X()
					BACN10YT()CD
				BACB30MB()A()	BACC30BH()
					BACC30X()
					BACN10YT()CD

BOLT - HEX DRIVE - PROTRUDING HEAD (SHEAR)
TABLE II

Fastener Substitution - Bolts
Figure 2 (Sheet 7)

BOEING PROPRIETARY - Copyright © - Unpublished Work - See title page for details.

INITIAL FASTENER OR SPECIFIED REPAIR FASTENER			FASTENER SUBSTITUTION		
PART NUMBER	DESCRIPTION	MATING PART	EQUIVALENT	ALTERNATIVE	MATING PART
BACB30MY()C() [H] [AA]	6AL-4V TITANIUM, CADMIUM PLATED, CETYL ALCOHOL LUBRICATED, MAX TEMP 450°F (232°C)	BACC30M()	NO EQUIVALENT	BACB30MY()K() [I]	BACC30AB()C
					BACC30AG()
					BACC30M()
					BACN10XJ() [T]
					BACN10YT()CD [T]
					BACN10ZZ()D [T]
				BACB30NX()K() [I]	BACC30BH() BACC30X() BACN10YT()CD [T]
				BACB30VN()K() [I] [J]	BACC30BK()
				BACB30VT()K() [I]	BACC30BL() BACC30BQ() BACN10YZ()
BACB30MY()K() [AA]	6AL-4V TITANIUM, ALUMINUM PIGMENTED COATING, 95 KSI SHEAR, CETYL ALCOHOL LUBRICATED, MAX TEMP 350°F (177°C)	BACC30AB()C	HI-SHEAR HL10VAZ	BACB30VT()K()	BACC30BS()
		BACC30AB()S	SPS HL10VAZ	BACB30FM()AK()	BACC30AB()S
			HUCK HL10VAZ		BACN10YT()CS [T]
			FAIRCHILD HL10VAZ		BACN10YT()CSA [T]
			DEUTSCH HL10VAZ		
			AIC HL10VAZ	BACB30MB()AK()	BACC30X()S
			WEST COAST HL10VAZ		BACN10BH()S
				BACB30NM()K() [F]	BACN10GW()AS
					NAS1805-() [R]
				BACB30NX()K()	BACC30BH()S [R]
					BACC30X()S
		BACC30AG()	NO EQUIVALENT	BACB30FM()-() [A] [L] [M]	BACC30AG()
					BACN10ZZ()D [T]
				BACB30FM()A() [M]	BACC30AG()
					BACN10ZZ()D [T]
				BACB30FM()AK()	BACC30AG()
					BACN10ZZ()D [T]
				BACB30VN()K() [J]	BACC30BK()
				BACB30VT()K()	BACC30BQ()

BOLT - HEX DRIVE - PROTRUDING HEAD (SHEAR)
TABLE II

Fastener Substitution - Bolts
Figure 2 (Sheet 8)

BOEING PROPRIETARY - Copyright © - Unpublished Work - See title page for details.

INITIAL FASTENER OR SPECIFIED REPAIR FASTENER			FASTENER SUBSTITUTION		
PART NUMBER	DESCRIPTION	MATING PART	EQUIVALENT	ALTERNATIVE	MATING PART
BACB30MY()K() [AA]	6AL-4V TITANIUM, ALUMINUM PIGMENTED COATING, 95 KSI SHEAR, CETYL ALCOHOL LUBRICATED, MAX TEMP 350°F (177°C)	BACC30M()	HI-SHEAR HL10VAZ SPS HL10VAZ HUCK HL10VAZ FAIRCHILD HL10VAZ DEUTSCH HL10VAZ AIC HL10VAZ WEST COAST HL10VAZ	BACB30FM()-() [A] [L] [M]	BACC30AB()C
					BACC30AG()
					BACC30M()
					BACN10XJ() [T]
					BACN10YT()CD [T]
					BACN10ZZ()D [T]
				BACB30FM()A() [M]	BACC30AB()C
					BACC30AG()
					BACC30M()
					BACCN10XJ() [T]
					BACN10YT()CD [T]
					BACN10ZZ()D [T]
				BACB30FM()AK()	BACC30AB()C
					BACC30AG()
					BACC30M()
					BACN10XJ() [T]
					BACN10YT()CD [T]
					BACN10ZZ()D [T]
				BACB30GW()A() [J] [M]	BACC30K()
					NAS1080E
				BACB30MB()-() [A] [L] [M]	BACC30BH()
					BACC30X()
					BACN10YT()CD [T]
				BACB30MB()A() [M]	BACC30BH()
					BACC30X()
					BACN10YT()CD [T]
				BACB30NX()K()	BACC30BH()
					BACC30X()
					BACN10YT()CD [T]
				BACB30VN()K() [J]	BACC30BK()
				BACB30VT()K()	BACC30BL()
					BACN10YZ() [T]

BOLT - HEX DRIVE - PROTRUDING HEAD (SHEAR)
TABLE II

Fastener Substitution - Bolts
Figure 2 (Sheet 9)

BOEING PROPRIETARY - Copyright © - Unpublished Work - See title page for details.

INITIAL FASTENER OR SPECIFIED REPAIR FASTENER			FASTENER SUBSTITUTION		
PART NUMBER	DESCRIPTION	MATING PART	EQUIVALENT	ALTERNATIVE	MATING PART
BACB30MY()R() [AA]	6AL-4V TITANIUM, PHOSPHATE FLUORIDE COATED, 95 KSI SHEAR, CETYL ALCOHOL LUBRICATED, MAX TEMP 600°F (316°C)	BACC30AG()	HI-SHEAR HL10VRA	BACB30MY()K() [I]	BACC30AG()
		BACC30M()	SPS HL10VRA	BACB30MY()K() [I]	BACC30M()
			HUCK HL10VRA		BACN10XJ() [T]
			FAIRCHILD HL10VRA		
			DEUTSCH HL10VRA		
			AIC HL10VRA		
			WEST COAST HL10VRA		
BACB30VT5HK() [AA]	6AL-4V TITANIUM, ALUMINUM PIGMENTED COATING, 95 KSI SHEAR, LIGHTWEIGHT, CETYL ALCOHOL LUBRICATED, MAX TEMP 350°F (177°C) (ENLARGED V HEX)		HI-SHEAR HST108AG	BACB30VT5K()	
			SPS HST108AG		
			AIC HST108AG		
			FAIRCHILD VL310AG		
			HUCK VL310AG		
BACB30VT()K() [AA]	6AL-4V TITANIUM, ALUMINUM PIGMENTED COATING, 95 KSI SHEAR, LIGHTWEIGHT, CETYL ALCOHOL LUBRICATED, MAX TEMP 350°F (177°C)	BACC30BL()	HI-SHEAR HST10AG	BACB30MY()K()	BACC30AB()C
			SPS HST10AG		BACC30AG()
			AIC HST10AG		BACC30M()
			FAIRCHILD VL10AG	BACB30VN()K() [J]	BACC30BK() [0]
		BACC30BP()	HUCK VL10AG	BACB30VN()K() [J]	BACC30BK() [0]
		BACC30BQ()		BACB30MY()K()	BACC30AG()
				BACB30VN()K() [J]	BACC30BK() [0]
		BACC30BS()S		BACB30MY()K()	BACC30AB()S
		BACN10YZ()		BACB30MY()K()	BACN10XJ() [T]
		BACN10ZV()		BACB30MY()K()	BACN10XJ() [T]
BACB30XE()K()	6AL-4V TITANIUM AL COATED, 95 KSI SHEAR, LIGHTWEIGHT, CETYL ALCOHOL LUBRICATED, SWAGE LOCKING	BACC30CG()	NO EQUIVALENT	BACB30VT()K()	BACC30BS()S
		BACC30CH()		BACB30VT()K()	BACC30BS()S WITH BACW10CA()CCU AND BACW10CA()PVU
		BACC30CK()		BACB30VT()K()	BACC30BL()

BOLT - HEX DRIVE - PROTRUDING HEAD (SHEAR)
TABLE II

Fastener Substitution - Bolts
Figure 2 (Sheet 10)

BOEING PROPRIETARY - Copyright © - Unpublished Work - See title page for details.

INITIAL FASTENER OR SPECIFIED REPAIR FASTENER			FASTENER SUBSTITUTION		
PART NUMBER	DESCRIPTION	MATING PART	EQUIVALENT	ALTERNATIVE	MATING PART
BACB30YL()K()	NICKEL ALLOY 718, 125 KSI SHEAR, ALUMINUM PIGMENTED COATING, CETYL ALCOHOL LUBRICATED, MAX TEMP 350°F (177°C)	BACC30CQ()C	HI-SHEAR HLT420AP AIC HLT420AP SPS HLT420AP	HLT420AP	HL791RD
		BACC30CQ()S		HLT420AP	HL791BF
HLT420-()-()	NICKEL ALLOY 718, 125 KSI SHEAR, PASSIVATED, CETYL ALCOHOL LUBRICATED		BACB30YL()U()		
HLT420AP-()-()	NICKEL ALLOY 718, 125 KSI SHEAR, ALUMINUM PIGMENTED COATING, CETYL ALCOHOL LUBRICATED		BACB30YL()K()		
HLT420PB-()-()	NICKEL ALLOY 718, 125 KSI SHEAR, CADMIUM PLATED, CETYL ALCOHOL LUBRICATED		NO EQUIVALENT	BACB30YL()K() I	
HLT620-()-()	NICKEL ALLOY 718, 1/64 OVERSIZE, 125 KSI SHEAR, PASSIVATED, CETYL ALCOHOL LUBRICATED		BACB30YL()U()X		
HLT620AP-()-()	NICKEL ALLOY 718, 1/64 OVERSIZE, 125 KSI SHEAR, ALUMINUM PIGMENTED COATING, CETYL ALCOHOL LUBRICATED		BACB30YL()K()X		

BOLT - HEX DRIVE - PROTRUDING HEAD (SHEAR)
TABLE II

Fastener Substitution - Bolts
Figure 2 (Sheet 11)

BOEING PROPRIETARY - Copyright © - Unpublished Work - See title page for details.

INITIAL FASTENER OR SPECIFIED REPAIR FASTENER			FASTENER SUBSTITUTION		
PART NUMBER	DESCRIPTION	MATING PART	EQUIVALENT	ALTERNATIVE	MATING PART
HLT620PB-()-()	NICKEL ALLOY 718, 1/64 OVERSIZE, 125 KSI SHEAR, CADMIUM PLATED, CETYL ALCOHOL LUBRICATED		NO EQUIVALENT	BACB30YL()K()X [I]	
HLT714-()-()	NICKEL ALLOY 718, 1/32 OVERSIZE, 125 KSI SHEAR, PASSIVATED CETYL ALCOHOL LUBRICATED		BACB30YL()U()Y		
HLT714AP-()-()	NICKEL ALLOY 718, 1/32 OVERSIZE, 125 KSI SHEAR, ALUMINUM PIGMENTED COATING, CETYL ALCOHOL LUBRICATED		BACB30YL()K()Y		
HLT714PB-()-()	NICKEL ALLOY 718, 1/32 OVERSIZE, 125 KSI SHEAR, CADMIUM PLATED, CETYL ALCOHOL LUBRICATED		NO EQUIVALENT	BACB30YL()K()Y [I]	
HL644AP-()-() [G]	PH13-8 Mo STAINLESS STEEL, ALUMINUM PIGMENTED COATING, CETYL ALCOHOL LUBRICATED		NO EQUIVALENT	HLT420AP-()-()	
HL860AP-()-()	6AL-4V TITANIUM, TITANIUM COMPOSITE APPLICATIONS, ALUMINUM PIGMENTED COATING, CETYL ETHYL LUBRICATED		BACB30VG()K()		

BOLT - HEX DRIVE - PROTRUDING HEAD (SHEAR)
TABLE II

Fastener Substitution - Bolts
Figure 2 (Sheet 12)

BOEING PROPRIETARY - Copyright © - Unpublished Work - See title page for details.

INITIAL FASTENER OR SPECIFIED REPAIR FASTENER			FASTENER SUBSTITUTION		
PART NUMBER	DESCRIPTION	MATING PART	EQUIVALENT	ALTERNATIVE	MATING PART
BACB30FN()-() [Q] [AA]	ALLOY STEEL, 100° HEAD, CADMIUM PLATED, 95 KSI SHEAR, CETYL ALCOHOL LUBRICATED MAX TEMP 450°F (232°C)	BACC30AG()	HI-SHEAR HL19PB	BACB30FN()A()	BACC30AG()
			SPS HL19PB	BACB30NW()K() [I]	BACC30AG()
			HUCK HL19PB	BACB30VU()K() [I]	BACC30BQ()
			DEUTSCH HL19PB	BACB30YP()K() [I]	BACC30BQ()
		BACC30M()	FAIRCHILD HL19PB	BACB30FN()A()	BACC30M()
			AIC HL19PB	BACB30NW()K() [I]	BACC30M()
			WEST COAST HL19PB	BACB30VU()K() [I]	BACC30BL()
					BACN10YZ() [T]
					BACN10ZV() [T]
				BACB30YP()K() [I]	BACC30BL()
					BACN10YZ() [T]
					BACN10ZV() [T]
BACB30FN()A() [AA]	A286 CRES, 100° HEAD, CADMIUM PLATED, 95 KSI SHEAR, CETYL ALCOHOL LUBRICATED MAX TEMP 450°F (232°C)	BACC30AB()C	HI-SHEAR HL441UC	BACB30NW()K() [I]	BACC30AB()C
			SPS HL441UC	BACB30VU()K() [I]	BACC30BS()
			HUCK HL441UC	BACB30YP()K() [I]	BACC30BS()
		BACC30AB()S	DEUTSCH HL441UC	BACB30NW()K() [I]	BACC30AB()S
			FAIRCHILD HL441UC	BACB30YP()K() [I]	BACC30BS()S
			AIC HL441UC	BACB30VU()K() [I]	BACC30BS()S
		BACC30AG()	WEST COAST HL441UC	BACB30NW()K() [I]	BACC30AG()
				BACB30YP()K() [I]	BACC30BQ()
				BACB30VU()K() [I]	BACC30BQ()
		BACC30M()		BACB30NW()K() [I]	BACC30M()
				BACB30VU()K() [I]	BACC30BL()
					BACN10YZ() [T]
				BACB30YP()K() [I]	BACC30BL()
					BACN10YZ() [T]

BOLT - HEX DRIVE - FLUSH HEAD (SHEAR)
TABLE III

Fastener Substitution - Bolts
Figure 2 (Sheet 13)

BOEING PROPRIETARY - Copyright © - Unpublished Work - See title page for details.

INITIAL FASTENER OR SPECIFIED REPAIR FASTENER			FASTENER SUBSTITUTION		
PART NUMBER	DESCRIPTION	MATING PART	EQUIVALENT	ALTERNATIVE	MATING PART
BACB30FN()AK() AA	A286 CRES, 100° HEAD, ALUMINUM PIGMENTED COATING, 95 KSI SHEAR, CETYL ALCOHOL LUBRICATED MAX TEMP 350°F (177°C)	BACC30AB()C	HI-SHEAR HL441AZ	BACB30NW()K()	BACC30AB()C
			SPS HL441AZ	BACB30VU()K()	BACC30BS()
			HUCK HL441AZ	BACB30YP()K()	BACC30BS()
		BACC30AB()S	DEUTSCH HL441AZ	BACB30NW()K()	BACC30AB()S
			FAIRCHILD HL441AZ	BACB30VU()K()	BACC30BS()S
			AIC HL441AZ	BACB30YP()K()	BACC30BS()S
			WEST COAST HL441AZ		
			WEST COAST WC131		
			AIC L-839C		
BACB30FN()A()SU	A286 CRES, PASSIVATED, 95 KSI SHEAR, DRY FILM LUBRICATED, 100° HEAD MAX TEMP 450°F (232°C)	BACC30AB()S	HI-SHEAR HL41DU	BACB30FN()A()U	BACC30AB()S
			SPS HL41DU		
			HUCK HL41DU		
			DEUTSCH HL41DU		
			FAIRCHILD HL41DU		
			AIC HL41DU		
			WEST COAST HL41DU		
BACB30FN()A()U AA	A286 CRES, PASSIVATED, 95 KSI SHEAR, CETYL ALCOHOL LUBRICATED, 100° HEAD MAX TEMP 900°F (482°C)	BACC30AB()P	HI-SHEAR HL41	NO ALTERNATIVE	
		BACC30AB()S	SPS HL41		
			HUCK HL41		
			DEUTSCH HL41		
			FAIRCHILD HL41		
			AIC HL41		
			WEST COAST HL41		

BOLT - HEX DRIVE - FLUSH HEAD (SHEAR)
TABLE III

Fastener Substitution - Bolts
Figure 2 (Sheet 14)

BOEING PROPRIETARY - Copyright © - Unpublished Work - See title page for details.

INITIAL FASTENER OR SPECIFIED REPAIR FASTENER			FASTENER SUBSTITUTION		
PART NUMBER	DESCRIPTION	MATING PART	EQUIVALENT	ALTERNATIVE	MATING PART
BACB30FN()K() [Q] [Z]	ALLOY STEEL, AL COATED, 95 KSI SHEAR, CETYL ALCOHOL LUBRICATED, MAX TEMP 350°F (177°C)	BACC30AG()	NO EQUIVALENT	BACB30FN()A() [M]	BACC30AG()
				BACB30NW()K()	BACC30AG()
				BACB30VU()K()	BACC30BQ()
				BACB30YP()K()	BACC30BQ()
		BACC30M()		BACB30FN()A() [M]	BACC30M()
				BACB30NW()K()	BACC30M()
				BACB30VU()K()	BACC30BL()
					BACN10YZ() [T]
					BACN10ZV() [T]
				BACB30YP()K()	BACC30BL()
					BACN10YZ() [T]
					BACN10ZV() [T]
BACB30HA()-() [AA]	7075-T6 AL, ANODIZED, 44.5 KSI SHEAR, CETYL ALCOHOL LUBRICATED, 100° HEAD, MAX TEMP 250°F (121°C)	BACC30P()	HI-SHEAR HL23 FAIRCHILD HL23 WESTCOAST HL23	NO ALTERNATIVE	
BACB30HA()R() [AA]	7075-T6 AL, ANODIZED, 44.5 KSI SHEAR, CETYL ALCOHOL LUBRICATED, 100° REDUCED SHEAR HEAD, MAX TEMP 250°F (121°C)	BACC30P()R	HI-SHEAR HL505 FAIRCHILD HL505 WESTCOAST HL505	NO ALTERNATIVE	
BACB30ND()-() [Q] [AA]	ALLOY STEEL, CADMIUM PLATED 95 KSI SHEAR, CETYL ALCOHOL LUBRICATED, 100° (MS20426) HEAD, MAX TEMP 450°F (232°C)	BACC30AG()	HI-SHEAR HL525 SPS HL525 HUCK HL525 DEUTSCH HL525 FAIRCHILD HL525 WEST COAST HL525	BACB30ND()A()	BACC30AG()
					BACN10ZZ()D [T]
				BACB30NZ()K() [I]	BACC30AG()
					BACN10ZZ()D [T]
		BACC30M()		BACB30ND()A()	BACC30M()
				BACB30NZ()K() [I]	BACC30M()

BOLT - HEX DRIVE - FLUSH HEAD (SHEAR)
TABLE III

Fastener Substitution - Bolts
Figure 2 (Sheet 15)

BOEING PROPRIETARY - Copyright © - Unpublished Work - See title page for details.

INITIAL FASTENER OR SPECIFIED REPAIR FASTENER			FASTENER SUBSTITUTION		
PART NUMBER	DESCRIPTION	MATING PART	EQUIVALENT	ALTERNATIVE	MATING PART
BACB30ND()A() [AA]	A286 CRES, CADMIUM PLATED, 95 KSI SHEAR, CETYL ALCOHOL LUBRICATED, 100° (MS20426) HEAD, MAX TEMP 450°F (232°C)	BACC30AG()	HI-SHEAR HL445PB SPS HL445PB HUCK HL445PB DEUTSCH HL445PB FAIRCHILD HL445PB WEST COAST HL445PB	BACB30ND()-() [A] [L]	BACC30AG() BACN10ZZ()D [T]
				BACB30NZ()K() [I]	BACC30AG() BACN10ZZ()D [T]
		BACC30M()		BACB30ND()-() [A] [L]	BACC30M()
				BACB30NZ()K() [I]	BACC30M()
BACB30ND()A()U [AA]	A286 CRES, PASSIVATED, 95 KSI SHEAR, CETYL ALCOHOL LUBRICATED, 100° (MS20426) HEAD, MAX TEMP 900°F (482°C)	BACC30AB()P	HI-SHEAR HL445 SPS HL445 HUCK HL445 DEUTSCH HL445 FAIRCHILD HL445 WEST COAST HL445	NO ALTERNATIVE	
BACB30NW()C() [H] [AA]	6AL-4V TITANIUM, 100° REDUCED HEAD, CADMIUM PLATED, 95 KSI SHEAR, CETYL ALCOHOL LUBRICATED, MAX TEMP 450°F (232°C)	BACC30AB()C	NO EQUIVALENT	BACB30FN()-() [A] [L]	BACC30AB()C BACN10YT()CD [T]
				BACB30FN()A()	BACC30AB()C BACN10YT()CD [T]
				BACB30FN()AK() [I]	BACC30AB()C BACN10YT()CD [T]
				BACB30VU()K() [I]	BACC30BS()
				BACB30YP()K() [I]	BACC30BS()
		BACC30AG()		BACB30FN()-() [A] [L]	BACC30AG() BACN10ZZ()D [T]
				BACB30FN()A()	BACC30AG() BACN10ZZ()D [T]
				BACB30FN()AK() [I]	BACC30AG() BACN10ZZ()D [T]
				BACB30NW()K() [I]	BACC30AG() BACN10ZZ()D [T]
				BACB30TY()K() [I] [J]	BACC30BE()
				BACB30VM()K() [I] [J]	BACC30BK()
				BACB30VU()K() [I]	BACC30BQ()
				BACB30YP()K() [I]	BACC30BQ()

BOLT - HEX DRIVE - FLUSH HEAD (SHEAR)
TABLE III

Fastener Substitution - Bolts
Figure 2 (Sheet 16)

BOEING PROPRIETARY - Copyright © - Unpublished Work - See title page for details.

INITIAL FASTENER OR SPECIFIED REPAIR FASTENER			FASTENER SUBSTITUTION		
PART NUMBER	DESCRIPTION	MATING PART	EQUIVALENT	ALTERNATIVE	MATING PART
BACB30NW()C() [H] [AA]	6AL-4V TITANIUM, 100° REDUCED HEAD, CADMIUM PLATED, 95 KSI SHEAR, CETYL ALCOHOL LUBRICATED, MAX TEMP 450°F (232°C)	BACC30M()	NO EQUIVALENT	BACB30FN()-() [A] [L]	BACC30AG()
					BACC30M()
				BACB30FN()A()	BACC30AB()C
					BACC30AG()
					BACC30M()
					BACN10XJ() [T]
					BACN10YT()CD [T]
					BACN10ZZ()D [T]
				BACB30FN()AK() [I]	BACC30AB()C
					BACC30AG()
					BACC30M()
					BACN10XJ() [T]
					BACN10YT()CD [T]
					BACN10ZZ()D [T]
				BACB30NW()K() [I]	BACC30AG()
					BACN10ZZ()D [T]
				BACB30TY()K() [I] [J]	BACC30BE()
				BACB30VM()K() [I] [J]	BACC30BK()
				BACB30VU()K() [I]	BACC30BL()
					BACN10YZ() [T]
				BACB30YP()K() [I]	BACC30BL()
					BACN10YZ() [T]

BOLT - HEX DRIVE - FLUSH HEAD (SHEAR)
TABLE III

Fastener Substitution - Bolts
Figure 2 (Sheet 17)

BOEING PROPRIETARY - Copyright © - Unpublished Work - See title page for details.

INITIAL FASTENER OR SPECIFIED REPAIR FASTENER			FASTENER SUBSTITUTION		
PART NUMBER	DESCRIPTION	MATING PART	EQUIVALENT	ALTERNATIVE	MATING PART
BACB30NW()K() [AA]	6AL-4V TITANIUM, 100° REDUCED HEAD, ALUMINUM PIGMENTED COATING, 95 KSI SHEAR, CETYL ALCOHOL LUBRICATED	BACC30AB()C	HI-SHEAR HL11VAZ SPS HL11VAZ HUCK HL11VAZ DEUTSCH HL11VAZ FAIRCHILD HL11VAZ AIC HL11VAZ WEST COAST HL11VAZ	BACB30FN()-() [A] [L] [M]	BACC30AB()C
					BACN10YT()CD [T]
				BACB30FN()A() [M]	BACC30AB()C
					BACN10YT()CD [T]
				BACB30FN()AK()	BACC30AB()C
					BACN10YT()CD [T]
				BACB30VU()K()	BACC30BS()
				BACB30YP()K()	BACC30BS()
		BACC30AB()S		BACB30VU()K()	BACC30BS()S
				BACB30YP()K()	BACC30BS()S
		BACC30AG()		BACB30FN()-() [A] [L] [M]	BACC30AG()
					BACN10ZZ()D [T]
				BACB30FN()A() [M]	BACC30AG()
					BACN10ZZ()D [T]
				BACB30FN()AK()	BACC30AG()
					BACN10ZZ()D [T]
				BACB30TY()K() [J]	BACC30BE()
				BACB30VM()K() [J]	BACC30BK()
				BACB30VU()K()	BACC30BQ()
				BACB30YP()K()	BACC30BQ()
		BACC30M()		BACB30FN()-() [A] [L] [M]	BACC30AG()
					BACC30M()
				BACB30FN()A() [M]	BACC30AB()C
					BACC30AG()
					BACC30M()
					BACN10XJ() [T]
					BACN10YT()CD [T]
					BACN10ZZ()D [T]
				BACB30FN()AK()	BACC30AB()C
					BACC30AG()
					BACC30M()
					BACN10XJ() [T]
					BACN10YT()CD [T]
					BACN10ZZ()D [T]

BOLT - HEX DRIVE - FLUSH HEAD (SHEAR)
TABLE III

Fastener Substitution - Bolts
Figure 2 (Sheet 18)

BOEING PROPRIETARY - Copyright © - Unpublished Work - See title page for details.

INITIAL FASTENER OR SPECIFIED REPAIR FASTENER			FASTENER SUBSTITUTION		
PART NUMBER	DESCRIPTION	MATING PART	EQUIVALENT	ALTERNATIVE	MATING PART
BACB30NW()K() [AA]	6AL-4V TITANIUM, 100° REDUCED HEAD, ALUMINUM PIGMENTED COATING, 95 KSI SHEAR, CETYL ALCOHOL LUBRICATED	BACC30M()	HI-SHEAR HL11VAZ SPS HL11VAZ HUCK HL11VAZ DEUTSCH HL11VAZ FAIRCHILD HL11VAZ AIC HL11VAZ WEST COAST HL11VAZ	BACB30TY()K() [J]	BACC30BE()
				BACB30VM()K() [J]	BACC30BK()
				BACB30VU()K()	BACC30BL()
					BACN10YZ() [T]
		BACN10YT()CS		BACB30VU()K()	BACC30BS()S [W]
				BACB30YP()K()	BACC30BS()S [W]
		BACN10YT()CD		BACB30VU()K()	BACC30BS() [W]
				BACB30YP()K()	BACC30BS() [W]
BACB30NW()R() [AA]	6AL-4V TITANIUM, 100° REDUCED HEAD, PHOSPHATE FLUORIDE COATED, 95 KSI SHEAR, CETYL ALCOHOL LUBRICATED	BACC30AG()	HI-SHEAR HL11VRA SPS HL11VRA HUCK HL11VRA DEUTSCH HL11VRA FAIRCHILD HL11VRA AIC HL11VRA WEST COAST HL11VRA	BACB30VU()K() [I]	BACC30BQ()
				BACB30YP()K() [I]	BACC30BQ()
		BACC30M()		BACB30VU()K() [I]	BACC30BL()
					BACN10YZ() [T]
				BACB30YP()K() [I]	BACC30BL()
					BACN10YZ() [T]
BACB30NW()S() [AA]	6AL-4V TITANIUM, 100° REDUCED HEAD, PHOSPHATE FLUORIDE COATED, 95 KSI SHEAR, SOLID FILM LUBRICATED	BACC30AB()S	HI-SHEAR HL11VSY SPS HL11VSY HUCK HL11VSY DEUTSCH HL11VSY FAIRCHILD HL11VSY AIC HL11VSY WEST COAST HL11VSY	BACB30VU()S()	BACC30BS()S
BACB30NZ()C() [H] [AA]	6AL-4V TITANIUM, CAD PLATED 95 KSI SHEAR, CETYL ALCOHOL LUBRICATED, 100° (MS20426) HEAD, MAX TEMP 450°F (232°C)	BACC30M()	NO EQUIVALENT	BACB30ND()-() [A] [L]	BACC30M()
				BACB30ND()A()	BACC30M()
				BACB30NZ()K() [I]	BACC30M()
		BACC30AG()		BACB30ND()-() [A] [L]	BACC30AG()
					BACN10ZZ()D [T]
				BACB30ND()A()	BACC30AG()
					BACN10ZZ()D [T]
				BACB30NZ()K() [I]	BACC30AG()
					BACN10ZZ()D [T]
		BACC30AB()C		BACB30ND()A()	BACC30AB()C
				BACB30NZ()K() [I]	BACC30AB()C

BOLT - HEX DRIVE - FLUSH HEAD (SHEAR)

TABLE III

Fastener Substitution - Bolts
Figure 2 (Sheet 19)

BOEING PROPRIETARY - Copyright © - Unpublished Work - See title page for details.

INITIAL FASTENER OR SPECIFIED REPAIR FASTENER			FASTENER SUBSTITUTION		
PART NUMBER	DESCRIPTION	MATING PART	EQUIVALENT	ALTERNATIVE	MATING PART
BACB30NZ()K() [AA]	6AL-4V TITANIUM, ALUMINUM PIGMENTED COATING 95 KSI SHEAR, CETYL ALCOHOL LUBRICATED, 100° (MS20426) HEAD, MAX TEMP 350°F (177°C)	BACC30M()	HI-SHEAR HL523AZ SPS HL523AZ HUCK HL523AZ DEUTSCH HL523AZ FAIRCHILD HL523AZ WEST COAST HL523AZ AIC HL523AZ	BACB30ND()A() [M]	BACC30M()
				BACB30ND()-() [A] [L] [M]	BACC30M()
		BACC30AG()		BACB30ND()A() [M]	BACC30AG()
					BACN10ZZ()D [T]
				BACB30ND()-() [A] [L] [M]	BACC30AG()
					BACN10ZZ()D [T]
		BACC30AB()C		BACB30ND()A() [M]	BACC30AB()C
BACB30VU5HK() [AA]	6AL-4V TITANIUM, 100° REDUCED HEAD, ALUMINUM PIGMENTED COATING, 95 KSI SHEAR, LIGHTWEIGHT, CETYL ALCOHOL LUBRICATED, (ENLARGED INTERNAL HEX)		HI-SHEAR HST109AG SPS HST109AG AIC HST109AG	BACB30VU5K()	
BACB30VU()K() [AA]	6AL-4V TITANIUM, 100° REDUCED HEAD, ALUMINUM PIGMENTED COATING, 95 KSI SHEAR, LIGHTWEIGHT, CETYL ALCOHOL LUBRICATED	BACC30BL()	HI-SHEAR HST11AG SPS HST11AG AIC HST11AG FAIRCHILD VL11AG HUCK VL11AG	BACB30NW()K()	BACC30M()
				BACB30VM()K() [J]	BACC30BK() [0]
				BACB30XT()K() [J]	BACC30BK() [0]
				BACB30YP()K()	BACC30BL()
		BACC30BP()		BACB30VM()K() [J]	BACC30BK() [0]
				BACB30XT()K() [J]	BACC30BK() [0]
				BACB30YP()K()	BACC30BP()
		BACC30BQ()		BACB30NW()K()	BACN10ZZ()D [T]
					BACC30AG()
				BACB30VM()K()	BACC30BK()
				BACB30XT()K()	BACC30BK()
				BACB30YP()K()	BACC30BQ()
		BACC30BS()		BACB30YP()K()	BACC30BS()
		BACC30BS()S		BACB30YP()K()	BACC30BS()S
		BACN10YZ()		BACC30NW()K()	BACN10YT()CD [T]
		BACN10ZV()		BACB30NW()K()	BACN10YT()CD [T]

BOLT - HEX DRIVE - FLUSH HEAD (SHEAR)
TABLE III

Fastener Substitution - Bolts
Figure 2 (Sheet 20)

C26292

BOEING PROPRIETARY - Copyright © - Unpublished Work - See title page for details.

INITIAL FASTENER OR SPECIFIED REPAIR FASTENER			FASTENER SUBSTITUTION		
PART NUMBER	DESCRIPTION	MATING PART	EQUIVALENT	ALTERNATIVE	MATING PART
BACB30XG()K()	6AL-4V TITANIUM, 100 DEGREES (MS20426) HEAD, AL COATED 95 KSI SHEAR LIGHTWEIGHT, CETYL ALCOHOL LUBRICATED, SWAGE LOCKING	BACC30CG()	NO EQUIVALENT	BACB30NZ()K()	BACC30AB()S
					BACN10YR()CM [D] [S]
		BACC30CH()		BACB30NZ()K()	BACC30AB()S WITH BACW10CA()CCU AND BACW10CA()PVU
		BACC30CK()		BACB30NZ()K()	BACC30M()
					BACN10YR()CD [D]
BACB30XR()K()	6AL-4V TITANIUM, 130 DEGREES SHEAR HEAD, AL COATED LIGHTWEIGHT, CETYL ALCOHOL LUBRICATED, SWAGE LOCKING	BACC30CG()	NO EQUIVALENT	BACB30WM()K()	BACC30BS()S
					BACN10YR()CM [D]
		BACC30CH()		BACB30WM()K()	BACC30BU()PW
					BACN10YR()CM WITH BACW10CA()CCU AND BACW10CA()PVU
BACB30YN()K()	NICKEL ALLOY 718, 125 KSI SHEAR, 100° REDUCED SHEAR HEAD	BACC30CQ()C	HI-SHEAR HLT421AP	HLT421AP	HL791RD
		BACC30CQ()S	AIC HLT421AP	HLT421AP	HL791BF
BACB30YP()K() [AA]	6AL-4V TITANIUM, 100° REDUCED SHEAR DOME HEAD, ALUMINUM PIGMENTED COATING, 95 KSI SHEAR, LIGHTWEIGHT, CETYL ALCOHOL LUBRICATED	BACC30BL()	AIR INDUSTRIES HST331 FAIRCHILD VL331 HI-SHEAR HST331 HUCK VL18	BACB30NW()K()	BACC30M()
					BACN10XJ() [T]
				BACB30VM()K() [J]	BACC30BK() [O]
				BACB30XT()K() [J]	BACC30BK() [O]
				BACB30VU()K()	BACC30BL()
					BACN10YZ() [T]
		BACC30BP()		BACB30VM()K() [J]	BACC30BK() [O]
				BACB30XT()K() [J]	BACC30BK() [O]
				BACB30VU()K()	BACC30BP()

BOLT - HEX DRIVE - FLUSH HEAD (SHEAR)
TABLE III

Fastener Substitution - Bolts
Figure 2 (Sheet 21)

BOEING PROPRIETARY - Copyright © - Unpublished Work - See title page for details.

INITIAL FASTENER OR SPECIFIED REPAIR FASTENER			FASTENER SUBSTITUTION		
PART NUMBER	DESCRIPTION	MATING PART	EQUIVALENT	ALTERNATIVE	MATING PART
BACB30YP()K() [AA]	6AL-4V TITANIUM, 100° REDUCED SHEAR DOME HEAD, ALUMINUM PIGMENTED COATING, 95 KSI SHEAR, LIGHTWEIGHT, CETYL ALCOHOL LUBRICATED	BACC30BQ()	NO EQUIVALENT	BACB30NW()K()	BACC30AG()
					BACN10ZZ()D [T]
				BACB30VM()K() [J]	BACC30BK()
				BACB30XT()K() [J]	BACC30BK()
				BACB30VU()K()	BACC30BQ()
		BACC30BS()		BACB30VU()K()	BACC30BS()
		BACC30BS()S		BACB30VU()K()	BACC30BS()S
		BACN10YZ()		BACC30NW()K()	BACN10YT()CD
		BACN10ZV()		BACB30NW()K()	BACN10YT()CD [T]
HLT421-()-() [AA]	NICKEL ALLOY 718, 125 KSI SHEAR, 100° HEAD, GRIT BLAST TOP OF HEAD, PASSIVATED, CETYL ALCOHOL LUBRICATED		BACB30YN()U()	NO ALTERNATIVE	
HLT421AP-()-() [AA]	NICKEL ALLOY 718, 125 KSI SHEAR, 100° HEAD, ALUMINUM PIGMENTED COATING, CETYL ALCOHOL LUBRICATED		BACB30YN()K()	NO ALTERNATIVE	
HLT421PB-()-() [AA]	NICKEL ALLOY 718, 125 KSI SHEAR, 100° HEAD, CADMIUM PLATED, CETYL ALCOHOL LUBRICATED		NO EQUIVALENT	BACB30YN()K() [I]	

BOLT - HEX DRIVE - FLUSH HEAD (SHEAR)
TABLE III

Fastener Substitution - Bolts
Figure 2 (Sheet 22)

BOEING PROPRIETARY - Copyright © - Unpublished Work - See title page for details.

INITIAL FASTENER OR SPECIFIED REPAIR FASTENER			FASTENER SUBSTITUTION		
PART NUMBER	DESCRIPTION	MATING PART	EQUIVALENT	ALTERNATIVE	MATING PART
HLT621-()-()	NICKEL ALLOY 718, 125 KSI SHEAR, 1/64 OVERSIZE, 100° HEAD, PASSIVATED CETYL ALCOHOL LUBRICATED		BACB30YN()U()X	NO ALTERNATIVE	
HLT621AP-()-()	NICKEL ALLOY 718, 125 KSI SHEAR, 1/64 OVERSIZE, 100° HEAD, ALUMINUM PIGMENTED COATING, CETYL ALCOHOL LUBRICATED		BACB30YN()K()X	NO ALTERNATIVE	
HLT621PB-()-()	NICKEL ALLOY 718, 125 KSI SHEAR, 1/64 OVERSIZE, 100° HEAD, CADMIUM PLATED, CETYL ALCOHOL LUBRICATED		NO EQUIVALENT	BACB30YN()K()X I	
HLT715-()-()	NICKEL ALLOY 718, 125 KSI SHEAR, 1/32 OVERSIZE, 100° HEAD, PASSIVATED, CETYL ALCOHOL LUBRICATED		BACB30YN()U()Y		
HLT715AP-()-()	NICKEL ALLOY 718, 125 KSI SHEAR, 1/32 OVERSIZE, 100° HEAD, ALUMINUM PIGMENTED COATING, CETYL ALCOHOL LUBRICATED		BACB30YN()K()Y		

BOLT - HEX DRIVE - FLUSH HEAD (SHEAR)
TABLE III

Fastener Substitution - Bolts
Figure 2 (Sheet 23)

BOEING PROPRIETARY - Copyright © - Unpublished Work - See title page for details.

INITIAL FASTENER OR SPECIFIED REPAIR FASTENER			FASTENER SUBSTITUTION		
PART NUMBER	DESCRIPTION	MATING PART	EQUIVALENT	ALTERNATIVE	MATING PART
HLT715PB-()-()	NICKEL ALLOY 718, 125 KSI SHEAR, 1/32 OVERSIZE, 100° HEAD, CADMIUM PLATED, CETYL ALCOHOL LUBRICATED		NO EQUIVALENT	BACB30YN()K()Y [I]	
HL645AP-()-() [G]	PH13-8 Mo STAINLESS STEEL, 100° FLUSH HEAD, ALUMINUM PIGMENTED COATING, CETYL ALCOHOL LUBRICATED		NO EQUIVALENT	BACB30YN()K() HLT421AP-()-()	
HL645PB-()-() [G]	PH13-8 Mo STAINLESS STEEL, 100° FLUSH HEAD, CADMIUM PLATED, CETYL ALCOHOL LUBRICATED		NO EQUIVALENT	BACB30YN()K() [I] HLT421AP-()-() [I]	
HL645TB-()-() [G]	PH13-8 Mo STAINLESS STEEL, 100° FLUSH HEAD, SOLID FILM, CETYL ALCOHOL LUBRICATED		NO EQUIVALENT	BACB30YN()K() [I] HLT421AP-()-() [I]	
HL859AP-()-()	6AL-4V TITANIUM, 156° FLUSH 3.5D HEAD, TITANIUM COMPOSITE APPLICATIONS, ALUMINUM PIGMENTED COATING, CETYL ALCOHOL LUBRICATED	HL97	NO EQUIVALENT	HL859AZ-()-()	HL97

BOLT - HEX DRIVE - FLUSH HEAD (SHEAR)
TABLE III

Fastener Substitution - Bolts
Figure 2 (Sheet 24)

BOEING PROPRIETARY - Copyright © - Unpublished Work - See title page for details.

INITIAL FASTENER OR SPECIFIED REPAIR FASTENER			FASTENER SUBSTITUTION		
PART NUMBER	DESCRIPTION	MATING PART	EQUIVALENT	ALTERNATIVE	MATING PART
BACB30MB()-() [Q] [AA]	ALLOY STEEL, 160 KSI TENSION, 95 KSI SHEAR, CADMIUM PLATED, CETYL ALCOHOL LUBRICATED, MAX TEMP 450°F (232°C)	BACC30M()	HI-SHEAR HL1050PB SPS HL1050PB HUCK HL1050PB FAIRCHILD HL1050PB AIC HL1050PB WEST COAST HL1050PB	BACB30MB()A()	BACC30M() BACN10XJ() [T]
				BACB30NX()K() [I]	BACC30M() BACN10XJ() [T]
		BACC30BH() OR BACC30X()		BACB30MB()A()	BACC30BH() BACC30X() BACN10YT()CD [T]
				BACB30NX()K() [I]	BACC30BH() BACC30X() BACN10YT()CD [T]
BACB30MB()A() [AA]	A286 CRES, 160 KSI TENSION, 95 KSI SHEAR, CADMIUM PLATED, CETYL ALCOHOL LUBRICATED, MAX TEMP 450°F (232°C)	BACC30BH() OR BACC30X()	HI-SHEAR HL448UC SPS HL448UC HUCK HL448UC FAIRCHILD HL448UC AIC HL448UC WEST COAST HL448UC	BACB30NX()K() [I]	BACC30BH() BACC30X() BACN10YT()CD [T]
BACB30MB()A()U [AA]	A286 CRES, 160 KSI TENSION, 95 KSI SHEAR, PASSIVATED CETYL ALCOHOL LUBRICATED, MAX TEMP 900°F (482°C)	BACC30BH()P OR BACC30X()P	HI-SHEAR HL448 SPS HL448 HUCK HL448 FAIRCHILD HL448 AIC HL448 WEST COAST HL448	BACB30NX()-()	BACC30BH()P BACC30X()P BACN10YT()CSA [T]
		BACC30BH()S OR BACC30X()S		BACB30NX()-()	BACC30BH()S BACC30X()S BACN10YT()CSA [T]

BOLT - HEX DRIVE - PROTRUDING HEAD (TENSION)
TABLE IV

Fastener Substitution - Bolts
Figure 2 (Sheet 25)

BOEING PROPRIETARY - Copyright © - Unpublished Work - See title page for details.

INITIAL FASTENER OR SPECIFIED REPAIR FASTENER			FASTENER SUBSTITUTION		
PART NUMBER	DESCRIPTION	MATING PART	EQUIVALENT	ALTERNATIVE	MATING PART
BACB30MB()AK() [AA]	A286 CRES, 160 KSI TENSION, 95 KSI SHEAR, ALUMINUM PIGMENTED COATING, CETYL ALCOHOL LUBRICATED, MAX TEMP 350°F (177°C)	BACC30BH() OR BACC30X()	HI-SHEAR HL448AZ SPS HL448AZ HUCK HL448AZ FAIRCHILD HL448AZ AIC HL448AZ WEST COAST HL448AZ WEST COAST WC133	BACB30NX()K()	BACC30BH() BACC30X()
		BACC30BH()S OR BACC30X()S		BACB30NX()K()	BACC30BH()S BACC30X()S
BACB30MB()K() [Q] [Z] [AA]	ALLOY STEEL, AL COATED, 95 KSI SHEAR, CETYL ALCOHOL LUBRICATED, MAX TEMP 350°F (177°C)	BACC30BH() OR BACC30X()	NO EQUIVALENT	BACB30NX()K()	BACC30BH() BACC30X()
		BACC30BH()S OR BACC30X()S		BACB30NX()K()	BACC30BH()S BACC30X()S
BACB30NX()K()	6AL-4V TITANIUM, 95 KSI SHEAR, ALUMINUM PIGMENTED COATING, CETYL ALCOHOL LUBRICATED, MAX TEMP 350°F (177°C)	BACC30BH() OR BACC30X()	HI-SHEAR HL1012AZ SPS HL1012AZ HUCK HL1012AZ FAIRCHILD HL1012AZ AIC HL1012AZ WEST COAST HL1012AZ	BACB30MB()-() [A] [L] [M]	BACC30BH() BACC30X() BACN10YT()CD [T]
				BACB30MB()A() [M]	BACC30BH() BACC30X() BACN10YT()CD [T]
				BACB30MB()AK()	BACC30BH() BACC30X() BACN10YT()CD [T]
				BACB30NX()K()	BACN10YT()CD [T]
		BACC30BH()S OR BACC30X()S		BACB30LE()K() [B] [F]	BACN10HR()CS [R] [T]
				BACB30MB()AK()	BACC30BH()S BACC30X()S
		BACC30BH()SW OR BACC30X()SW		BACB30LE()K() [B] [F]	BACN10HR()CS [R] [T]
				BACB30MB()AK()	BACC30BH()S BACC30X()S

BOLT - HEX DRIVE - PROTRUDING HEAD (TENSION)
TABLE IV

Fastener Substitution - Bolts
Figure 2 (Sheet 26)

BOEING PROPRIETARY - Copyright © - Unpublished Work - See title page for details.

INITIAL FASTENER OR SPECIFIED REPAIR FASTENER			FASTENER SUBSTITUTION		
PART NUMBER	DESCRIPTION	MATING PART	EQUIVALENT	ALTERNATIVE	MATING PART
BACB30NX()C()	6AL-4V TITANIUM, 95 KSI SHEAR, CADMIUM PLATED, CETYL ALCOHOL LUBRICATED MAX TEMP 450°F (232°C)	BACC30X() OR BACC30BH()	NO EQUIVALENT	BACB30MB()-() [A] [L]	BACC30BH()
					BACC30X()
					BACN10YT()CD [T]
				BACB30MB()A()	BACC30BH()
					BACC30X()
					BACN30YT()CD [T]
				BACB30MB()AK() [I]	BACC30BH()
					BACC30X()
					BACN30YT()CD [T]
				BACB30NX()K() [I]	BACC30BH()
					BACC30X()
					BACN30YT()CD [T]
BACB30XH()K()	6AL-4V TITANIUM, LIGHTWEIGHT, AL COATED, CETYL ALCOHOL LUBRICATED, SWAGE LOCKING	BACC30CG()	NO EQUIVALENT	BACB30NX()K()	BACC30AB()S
					BACN10YR()CM [D] [S]
				BACB30VT()K() [J]	BACC30BS()S
		BACC30CH()		BACB30NX()K()	BACC30AB()S WITH BACW10CA()CCU AND BACW10CA()PVU
		BACC30CJ()		BACB30NX()K()	BACC30BH()S
		BACC30CK()		BACB30NX()K()	BACC30M()
					BACN10YR()CD [D]
				BACB30VT()K() [J]	BACC30BL()
					BACC30BZ()
BACB30XZ()K()	NICKEL ALLOY 718, LIGHTWEIGHT, PASSIVATED, AL COATED, CETYL ALCOHOL LUBRICATED, SWAGE LOCKING	BACC30CG()	NO EQUIVALENT	BACB30YK()K()	BACC30AB()S
					BAC10YR()CM [D] [S]
		BACC30CJ()		BACB30YK()K()	BACC30CP()S

BOLT - HEX DRIVE - PROTRUDING HEAD (TENSION)
TABLE IV

Fastener Substitution - Bolts
Figure 2 (Sheet 27)

BOEING PROPRIETARY - Copyright © - Unpublished Work - See title page for details.

INITIAL FASTENER OR SPECIFIED REPAIR FASTENER			FASTENER SUBSTITUTION		
PART NUMBER	DESCRIPTION	MATING PART	EQUIVALENT	ALTERNATIVE	MATING PART
BACB30YK()K()	NICKEL ALLOY 718, 125 KSI SHEAR, ALUMINUM PIGMENTED COATING, CETYL ALCOHOL LUBRICATED	BACC30CP()C	HI-SHEAR HLT422AP AIC HLT422AP	HLT422AP	HLT792KK
		BACC30CP()S		HLT422AP	HL792BT
HLT422-()-()	NICKEL ALLOY 718, GRIT BLAST TOP HEAD, PASSIVATED, CETYL ALCOHOL LUBRICATED		BACB30YK()U()		
HLT422AP-()-()	NICKEL ALLOY 718, ALLUMINUM PIGMENTED COATING, CETYL ALCOHOL LUBRICATED		BACB30YK()K()		
HLT422PB-()-()	NICKEL ALLOY 718, CADMIUM PLATED, CETYL ALCOHOL LUBRICATED		NO EQUIVALENT	BACB30YK()K() I	
HLT622-()-()	NICKEL ALLOY 718, 1/64 OVERSIZE, PASSIVATED, CETYL ALCOHOL LUBRICATED		BACB30YK()U()X		
HLT622AP-()-()	NICKEL ALLOY 718, ALUMINUM PIGMENTED COATING, 1/64 OVERSIZE, CETYL ALCOHOL LUBRICATED		BACB30YK()K()X		
HLT622PB-()-()	NICKEL ALLOY 718, CADMIUM PLATED, 1/64 OVERSIZE, CETYL ALCOHOL LUBRICATED		NO EQUIVALENT	BACB30YK()K()X I	

BOLT - HEX DRIVE - PROTRUDING HEAD (TENSION)
TABLE IV

Fastener Substitution - Bolts
Figure 2 (Sheet 28)

BOEING PROPRIETARY - Copyright © - Unpublished Work - See title page for details.

INITIAL FASTENER OR SPECIFIED REPAIR FASTENER			FASTENER SUBSTITUTION		
PART NUMBER	DESCRIPTION	MATING PART	EQUIVALENT	ALTERNATIVE	MATING PART
HL646PB-()-() [G]	PH13-8Mo STAINLESS STEEL, CADMIUM PLATED, CETYL ALCOHOL LUBRICATED		NO EQUIVALENT	HLT422AP()-() [I] BACB30YK()K() [I]	
HL646TB-()-() [G]	PH13-8Mo STAINLESS STEEL, SOLID FILM, CETYL ALCOHOL LUBRICATED		NO EQUIVALENT	HLT422AP()-() [I] BACB30YK()K() [I]	
HLT716-()-()	NICKEL ALLOY 718, PASSIVATED, 1/32 OVERSIZE, CETYL ALCOHOL LUBRICATED		BACB30YK()U()Y		
HLT716AP-()-()	NICKEL ALLOY 718, ALUMINUM PIGMENTED COATING, 1/32 OVERSIZE, CETYL ALCOHOL LUBRICATED		BACB30YK()K()Y		
HLT716PB-()-()	NICKEL ALLOY 718, CADMIUM PLATED, 1/32 OVERSIZE, CETYL ALCOHOL LUBRICATED		NO EQUIVALENT	BACB30YK()K()Y [I]	

BOLT - HEX DRIVE - PROTRUDING HEAD (TENSION)
TABLE IV

Fastener Substitution - Bolts
Figure 2 (Sheet 29)

BOEING PROPRIETARY - Copyright © - Unpublished Work - See title page for details.

INITIAL FASTENER OR SPECIFIED REPAIR FASTENER			FASTENER SUBSTITUTION		
PART NUMBER	DESCRIPTION	MATING PART	EQUIVALENT	ALTERNATIVE	MATING PART
BACB30JC()-() [Q] [AA]	ALLOY STEEL, 100° (AN509) HEAD,160 KSI TENSION, CADMIUM PLATED, CETYL ALCOHOL LUBRICATED 450°F (232°C)	BACC30X() OR BACC30BH()	HI-SHEAR HL21PB SPS HL21PB HUCK HL21PB FAIRCHILD HL21PB AIC HL21PB WEST COAST HL21PB	BACB30NY()K() [I]	BACC30BH() BACC30X() BACNYT()CD [T]
		BACC30Z()		BACB30NY()K() [I]	BACC30BH()P BACC30X()P
BACB30JC()A() [AA]	A286 CRES, 100° (AN509) HEAD, 160 KSI TENSION, CADMIUM PLATED, CETYL ALCOHOL LUBRICATED, MAX TEMP 450°F (232°C)	BACC30X() OR BACC30BH()	HI-SHEAR HL449UC SPS HL449UC HUCK HL449UC FAIRCHILD HL449UC AIC HL449UC WEST COAST HL449UC	BACB30NY()K() [I]	BACC30BH() BACC30X() BACN10YT()CD [T]
BACB30JC()AK() [AA]	A286 CRES, 100° (AN509) HEAD, 160 KSI TENSION, ALUMINUM COATED, CETYL ALCOHOL LUBRICATED, MAX TEMP 350°F (177°C)	BACC30X() OR BACC30BH()	HI-SHEAR HL449AZ DEUTSCH HL449AZ SPS HL449AZ FAIRCHILD HL449AZ WEST COAST HL449AZ	BACB30JC()-() [A] [L] [M]	BACC30BH() BACC30X() BACN10YT()CD [T]
				BACB30JC()A() [M]	BACC30BH() BACC30X() BACN10YT()CD [T]
				BACB30JC()AK()	BACN10YT()CD [T]
				BACB30NY()K()	BACC30BH() BACC30X() BACN10YT()CD [T]
BACB30JC()A()U	A286 CRES, PASSIVATED, 160 KSI TENSION, CETYL ALCOHOL LUBRICATED, 100° (AN509) HEAD, MAX TEMP 900°F (482°C)	BACC30X()P	AIC HL49 HI-SHEAR HL49 SPS HL49 FAIRCHILD HL49 DEUTSCH HL49 WEST COAST HL49	BACB30LP()U() [F]	NAS1805-()P [R] [T]
				BACB30LR()U() [F]	NAS1805-()P [R] [T]

BOLT - HEX DRIVE - FLUSH HEAD (TENSION)
TABLE V

Fastener Substitution - Bolts
Figure 2 (Sheet 30)

BOEING PROPRIETARY - Copyright © - Unpublished Work - See title page for details.

INITIAL FASTENER OR SPECIFIED REPAIR FASTENER			FASTENER SUBSTITUTION		
PART NUMBER	DESCRIPTION	MATING PART	EQUIVALENT	ALTERNATIVE	MATING PART
BACB30NY()C() [H] [AA]	6AL-4V TITANIUM, 160 KSI TENSION, CADMIUM PLATED, CETYL ALCOHOL, LUBRICATED MAX TEMP 450°F (232°C)	BACC30X() OR BACC30BH()	NO EQUIVALENT	BACB30JC()-() [A] [L]	BACC30BH()
					BACC30X()
					BACN10YT()CD [T]
				BACB30JC()A()	BACC30BH()
					BACC30X()
					BACN10YT()CD [T]
				BACB30JC()AK() [I]	BACC30BH()
					BACC30X()
					BACN10YT()CD [T]
				BACB30NY()K() [I]	BACC30BH()
					BACC30X()
					BACN10YT()CD [T]
BACB30NY()K() [AA]	6AL-4V TITANIUM, 160 KSI TENSION, ALUMINUM PIGMENTED COATING, CETYL ALCOHOL LUBRICATED, MAX TEMP 350°F (177°C)	BACC30X() OR BACC30BH()	HI-SHEAR HL1013VAZ SPS HL1013VAZ HUCK HL1013VAZ FAIRCHILD HL1013VAZ AIC HL1013VAZ WEST COAST HL1013VAZ	BACB30JC()-() [A] [L] [M]	BACC30BH()
					BACC30X()
					BACN10YT()CD [T]
				BACB30JC()A() [M]	BACC30BH()
					BACC30X()
					BACN10YT()CD [T]
				BACB30JC()AK()	BACC30BH()
					BACC30X()
					BACN10YT()CD [T]
				BACB30NY()K()	BACN10YT()CD [T]
BACB30XF()K()	6AL-4V TITANIUM, 100° HEAD, LIGHTWEIGHT, 95 KSI SHEAR, AL COATED, CETYL ALCOHOL LUBRICATED, SWAGE LOCKING	BACC30CG()	NO EQUIVALENT	BACB30NY()K()	BACC30AB()S
		BACC30CH()		BACB30NY()K()	NAS1805-() WITH BACW10CA()CCU AND BACW10CA()PVU
		BACC30CJ()		BACB30NY()K()	BACC30BH()S
		BACC30CK()		BACB30NY()K()	BACC30M()

BOLT - HEX DRIVE - FLUSH HEAD (TENSION)
TABLE V

Fastener Substitution - Bolts
Figure 2 (Sheet 31)

BOEING PROPRIETARY - Copyright © - Unpublished Work - See title page for details.

INITIAL FASTENER OR SPECIFIED REPAIR FASTENER			FASTENER SUBSTITUTION		
PART NUMBER	DESCRIPTION	MATING PART	EQUIVALENT	ALTERNATIVE	MATING PART
BACB30XY()K()	NICKEL ALLOY 718, 100° HEAD, LIGHTWEIGHT, PASSIVATED, AL COATED, CETYL ALCOHOL LUBRICATED, SWAGE LOCKING	BACC30CJ()	NO EQUIVALENT	BACB30YM()K()	BACC30CP()S
BACB30YM()K()	NICKEL ALLOY 718, 125 KSI SHEAR, 100° HEAD, ALUMINUM PIGMENTED COATING, CETYL ALCOHOL LUBRICATED	BACC30CP()C	HI-SHEAR HLT423AP	HLT423AP	HL792KK
		BACC30CP()S	AIC HLT423AP	HLT423AP	HL792BT
HLT423-()-()	NICKEL ALLOY 718, 100° FLUSH (MS24694) HEAD, GRIT BLAST TOP OF HEAD, PASSIVATED, CETYL ALCOHOL LUBRICATED		BACB30YM()U()		
HLT423AP-()-()	NICKEL ALLOY 718, 100° FLUSH (MS24694) HEAD, ALUMINUM PIGMENTED COATING, CETYL ALCOHOL LUBRICATED		BACB30YM()K()		
HLT423PB-()-()	NICKEL ALLOY 718, 100° FLUSH (MS24694) HEAD, CADMIUM PLATED, CETYL ALCOHOL LUBRICATED		NO EQUIVALENT	BACB30YM()K() [I]	

BOLT - HEX DRIVE - FLUSH HEAD (TENSION)
TABLE V

Fastener Substitution - Bolts
Figure 2 (Sheet 32)

BOEING PROPRIETARY - Copyright © - Unpublished Work - See title page for details.

INITIAL FASTENER OR SPECIFIED REPAIR FASTENER			FASTENER SUBSTITUTION		
PART NUMBER	DESCRIPTION	MATING PART	EQUIVALENT	ALTERNATIVE	MATING PART
HLT623-()-()	NICKEL ALLOY 718, 100° FLUSH (MS24694) HEAD, 1/64 OVERSIZE, PASSIVATED, CETYL ALCOHOL LUBRICATED		BACB30YM()U()X		
HLT623AP-()-()	NICKEL ALLOY 718, 100° FLUSH (MS24694) HEAD, 1/64 OVERSIZE, ALUMINUM PIGMENTED COATING, CETYL ALCOHOL LUBRICATED		BACB30YM()K()X		
HLT623PB-()-()	NICKEL ALLOY 718, 100° FLUSH (MS24694) HEAD, 1/64 OVERSIZE, CADMIUM PLATED, CETYL ALCOHOL LUBRICATED		NO EQUIVALENT	BACB30YM()K()X [I]	

BOLT - HEX DRIVE - FLUSH HEAD (TENSION)
TABLE V

Fastener Substitution - Bolts
Figure 2 (Sheet 33)

BOEING PROPRIETARY - Copyright © - Unpublished Work - See title page for details.

INITIAL FASTENER OR SPECIFIED REPAIR FASTENER			FASTENER SUBSTITUTION		
PART NUMBER	DESCRIPTION	MATING PART	EQUIVALENT	ALTERNATIVE	MATING PART
HLT717-()-()	NICKEL ALLOY 718, 100° FLUSH (MS24649) HEAD, 1/32 OVERSIZE, PASSIVATED, CETYL ALCOHOL LUBRICATED		BACB30YM()U()Y		
HLT717AP-()-()	NICKEL ALLOY 718, 100° FLUSH (MS24694) HEAD, 1/32 OVERSIZE, ALUMINUM PIGMENTED CETYL ALCOHOL LUBRICATED		BACB30YM()K()Y		
HLT717PB-()-()	NICKEL ALLOY 718, 100° FLUSH (MS24649) HEAD, 1/32 OVER-SIZE, CADMIUM PLATED, CETYL ALCOHOL LUBRICATED		NO EQUIVALENT	BACB30YM()K()Y [I]	

BOLT - HEX DRIVE - FLUSH HEAD (TENSION)
TABLE V

Fastener Substitution - Bolts
Figure 2 (Sheet 34)

BOEING PROPRIETARY - Copyright © - Unpublished Work - See title page for details.

INITIAL FASTENER OR SPECIFIED REPAIR FASTENER			FASTENER SUBSTITUTION		
PART NUMBER	DESCRIPTION	MATING PART	EQUIVALENT	ALTERNATIVE	MATING PART
BACB30FD()-()	ALLOY STEEL, CADMIUM FLUOBORATE PLATED, 12 POINT HEAD, 180 KSI TENSION, MAX TEMP 450°F (232°C)		NO EQUIVALENT	BACB30LE()-()	
				BACB30LE()K() [I]	
				BACB30US()P()	
				BACB30US()K() [I]	
BACB30GE()-()	HEX CLOSE TOL 160,000 PSI SHORT THREAD		NO EQUIVALENT	BACB30LE()-() [B]	
				BACB30LE()K() [B] [I]	
				BACB30LJ()-()	
				BACB30LM()-()	
				BACB30LT()-()	
				BACB30MR()K() [B] [I]	
				BACB30NE()-() [A] [L]	
				BACB30NF()-()	
				BACB30NM()K() [I]	
				BACB30NR()K() [I] [V]	
				BACB30US()K() [B] [I]	
				BACB30US()P() [B]	
				NAS6703 THRU NAS6720	
BACB30LE()-()	A286 CRES, CADMIUM PLATED, 12 POINT HEAD, LONG THREAD, 200 KSI TENSION, MAX TEMP 450°F (232°C)		NO EQUIVALENT	BACB30LE()K() [I]	
				BACB30US()K() [I]	
				BACB30US()P()	

BOLT - EXTERNAL WRENCHING - PROTRUDING HEAD
TABLE VI

Fastener Substitution - Bolts
Figure 2 (Sheet 35)

BOEING PROPRIETARY - Copyright © - Unpublished Work - See title page for details.

INITIAL FASTENER OR SPECIFIED REPAIR FASTENER			FASTENER SUBSTITUTION		
PART NUMBER	DESCRIPTION	MATING PART	EQUIVALENT	ALTERNATIVE	MATING PART
BACB30LE()DK()	A286 CRES, 12 POINT HEAD, 200 KSI TENSILE 110 KSI SHEAR, LONG THREAD ALUMINUM PIGMENTED COATING, MAX TEMP 350°F (177°C)	BACN10JD() OR BACN11N() OR MS14144	NO EQUIVALENT	BACB30US()K()D	X
BACB30LE()K()		BACN10HR()CD		BACB30LE()-() M	BACN10HR()CD R
				BACB30US()K()	BACN10HR()CD R
				BACB30US()P() M	BACN10HR()CD R
BACB30LE()U()	A286 CRES, PASSIVATED, 12 POINT HEAD, LONG THREAD, 200 KSI TENSION, MAX TEMP 900°F (482°C)		NO EQUIVALENT	BACB30US()-() U	
BACB30LJ()-()	A286 CRES, HEX HEAD, 95 KSI SHEAR, SHORT THREAD, CADMIUM PLATED, MAX TEMP 450°F (232°C)		NO EQUIVALENT	BACB30LE()-() B	
				BACB30LE()K() B I	
				BACB30LM()-()	
				BACB30LT()-()	
				BACB30MR()K() B I	
				BACB30NM()K() I	
				BACB30NR()K() I	
				BACB30US()K() B I	
				BACB30US()P() B	
				NAS6703 THRU NAS6720	
BACB30LJ()D()	A286 CRES, HEX HEAD, 95 KSI SHEAR, SHORT THREAD, CADMIUM PLATED, DRILLED SHANK, MAX TEMP 450°F (232°C)	BACN10JD() OR BACN11N() OR MS14145	NO EQUIVALENT	BACB30LE()DK() B I	X
				BACB30LM()D()	X
				BACB30LT()D()	X
				BACB30NE()D() A	X
				BACB30US()K()D B I	X
				NAS6703D THRU NAS6720D	X

BOLT - EXTERNAL WRENCHING - PROTRUDING HEAD
TABLE VI

Fastener Substitution - Bolts
Figure 2 (Sheet 36)

BOEING PROPRIETARY - Copyright © - Unpublished Work - See title page for details.

INITIAL FASTENER OR SPECIFIED REPAIR FASTENER			FASTENER SUBSTITUTION		
PART NUMBER	DESCRIPTION	MATING PART	EQUIVALENT	ALTERNATIVE	MATING PART
BACB30LJ()U()	A286 CRES, PASSIVATED, HEX HEAD, SHORT THREAD, 95 KSI SHEAR, MAX TEMP 900°F (482°C)		NO EQUIVALENT	BACB30LM()U()	
				BACB30LT()U()	
				BACB30LE()U() [B]	
				BACB30PN()-() [B]	
				BACB30US()-() [B] [U]	
				NAS6703U THRU NAS6720U	
BACB30LJ()SU()	A286 CRES, PASSIVATED, HEX HEAD, SHORT THREAD, 95 KSI SHEAR, DRY FILM LUBRICATED, MAX TEMP 450°F (232°C)		NO EQUIVALENT	BACB30LJ()U()	
				BACB30LM()U()	
				BACB30LM()SU()	
				BACB30LT()U()	
				BACB30LE()U() [B]	
				BACB30PN()-() [B]	
				BACB30US()-() [B]	
				NAS6703U THRU NAS6720U	
BACB30LM()-()	A286 CRES, CADMIUM PLATED, HEX HEAD, LONG THREAD, 160 KSI TENSION, MAX TEMP 450°F (232°C)		NAS6703 THRU NAS6720	BACB30LE()-() [B]	
				BACB30LE()K() [B] [I]	
				BACB30MR()K() [B] [I]	
				BACB30NM()K() [I]	
				BACB30US()K() [B] [I]	
BACB30LM()SU()	A286 CRES, PASSIVATED, HEX HEAD, LONG THREAD, 160 KSI TENSION, DRY FILM LUBRICATED, MAX TEMP 450°F (232°C)		NO EQUIVALENT	BACB30LE()U() [B]	
				BACB30LM()U()	
				BACB30PN()-() [B]	
				BACB30US()-() [B]	
				NAS6703U THRU NAS6720U	
BACB30LM()U()	A286 CRES, PASSIVATED, HEX HEAD, LONG THREAD, 160 KSI TENSION, MAX TEMP 900°F (482°C)		NAS6703U THRU NAS6720U	BACB30LE()U() [B]	
				BACB30PN()-() [B]	
				BACB30US()-() [B] [U]	
BACB30LT()-()	A286 CRES, CADMIUM PLATED, 12 POINT HEAD, SHORT THREAD, 110 KSI SHEAR, MAX TEMP 450°F (232°C)		NO EQUIVALENT	BACB30LE()-() [B]	
				BACB30LE()K() [B] [I]	
				BACB30US()K() [B] [I]	
				BACB30US()P() [B]	
				BACB30LT()K() [I]	

BOLT - EXTERNAL WRENCHING - PROTRUDING HEAD
TABLE VI

Fastener Substitution - Bolts
Figure 2 (Sheet 37)

BOEING PROPRIETARY - Copyright © - Unpublished Work - See title page for details.

INITIAL FASTENER OR SPECIFIED REPAIR FASTENER			FASTENER SUBSTITUTION		
PART NUMBER	DESCRIPTION	MATING PART	EQUIVALENT	ALTERNATIVE	MATING PART
BACB30LT()DK()	A286 CRES, 12 POINT HEAD, 110 KSI SHEAR, SHORT THREAD, CLOSE TOLERANCE, DRILLED SHANK, ALUMINUM PIGMENTED COATING, MAX TEMP 350°F (177°C)	BACN10JD OR BACN11N() OR MS14145	NO EQUIVALENT	BACB30LT()D() [M]	[X]
				BACB30US()K()D [B]	[X]
BACB30LT()K()	A286 CRES, 12 POINT HEAD, 110 KSI SHEAR, SHORT THREAD, CLOSE TOLERANCE, ALUMINUM PIGMENTED COATING, MAX TEMP 350°F (177°C)		NO EQUIVALENT	BACB30LT()-() [M]	
				BACB30US()K() [B]	
				BACB30US()P() [B] [M]	
BACB30LT()U()	A286 CRES, 12 POINT HEAD, 110 KSI SHEAR, SHORT THREAD, CLOSE TOLERANCE, PASSIVATED, MAX TEMP 1200°F (649°C)	BACN10JC()CM OR BACN10YR()CM	NO EQUIVALENT	NO ALTERNATIVE	
BACB30LT()DU()		BACN10JD() OR BACN11N()			
BACB30MR()C() [H]	6AL-4V TITANIUM, CAD PLATED, 12 POINT, HEAD LONG THREADED. 95 KSI MAX TEMP 450°F (232°C)		NO EQUIVALENT	BACB30LE()K() [I]	
				BACB30MR()K() [I]	
				BACB30US()K() [I]	
				BACB30US()P()	
BACB30MR()K()	6AL-4V TITANIUM, 12 POINT HEAD, 95 KSI SHEAR, LONG THREAD, ALUMINUM PIGMENTED COATING, MAX TEMP 350°F (177°C)		NO EQUIVALENT	BACB30LE()-() [M]	
				BACB30LE()K()	
				BACB30US()K()	
				BACB30US()P() [M]	

BOLT - EXTERNAL WRENCHING - PROTRUDING HEAD
TABLE VI

Fastener Substitution - Bolts
Figure 2 (Sheet 38)

BOEING PROPRIETARY - Copyright © - Unpublished Work - See title page for details.

INITIAL FASTENER OR SPECIFIED REPAIR FASTENER			FASTENER SUBSTITUTION		
PART NUMBER	DESCRIPTION	MATING PART	EQUIVALENT	ALTERNATIVE	MATING PART
BACB30MR()DK()	6AL-4V TITANIUM, 12 POINT HEAD, 95 KSI SHEAR, LONG THREAD, ALUMINUM PIGMENTED COATING, DRILLED SHANK, MAX TEMP 350°F (177°C)	BACN10JD() OR BACN11N() OR MS14144	NO EQUIVALENT	BACB30LE()DK()	X
				BACB30US()K()D	X
BACB30MT()-() E	H-11 STEEL BOLT, 12 POINT HEAD, 220 KSI TENSION, 125 KSI SHEAR		NO EQUIVALENT	BACB30US()K()	
BACB30MT()H() E BACB30MT()HK() E BACB30MT()HL() E BACB30MT()HT() E	H-11 STEEL BOLT, 12 POINT HEAD, 220 KSI TENSION, 125 KSI SHEAR DRILLED HEAD		NO EQUIVALENT	BACB30US()K()H	
BACB30MT()K() E	H-11 STEEL, ALUMINUM PIGMENTED COATING, 12 POINT HEAD, LONG THREAD, 220 KSI TENSION, MAX TEMP 350°F (177°C)		NO EQUIVALENT	BACB30US()K()	
				BACB30US()P() M	
BACB30MT()L() E	H-11 STEEL, ALUMINUM PIGMENTED COATING, 12 POINT HEAD, LONG THREAD, 220 KSI TENSION, MAX TEMP 600°F (316°C)		NO EQUIVALENT	BACB30US()K() I K	
				BACB30US()P()	
BACB30MT()T() E	H-11 STEEL, DIFFUSED NICKEL-CADMIUM PLATED, 12 POINT HEAD, LONG THREAD, 220 KSI TENSION, MAX TEMP 600°F (316°C)		NO EQUIVALENT	BACB30US()K() I K	
				BACB30US()P()	

BOLT - EXTERNAL WRENCHING - PROTRUDING HEAD
TABLE VI

Fastener Substitution - Bolts
Figure 2 (Sheet 39)

BOEING PROPRIETARY - Copyright © - Unpublished Work - See title page for details.

INITIAL FASTENER OR SPECIFIED REPAIR FASTENER			FASTENER SUBSTITUTION		
PART NUMBER	DESCRIPTION	MATING PART	EQUIVALENT	ALTERNATIVE	MATING PART
BACB30NE()-()	ALLOY STEEL, CADMIUM PLATED, HEX HEAD, LONG THREAD, 160 KSI TENSION, MAX TEMP 450°F (232°C)		NAS6603 THRU NAS6620	BACB30LE()-() [B]	
				BACB30LE()K() [B] [I]	
				BACB30LM()-()	
				BACB30MR()K() [B] [I]	
				BACB30NM()K() [I]	
				BACB30US()K() [B] [I]	
				BACB30US()P() [B]	
				NAS6703 THRU NAS6720	
BACB30NF()-()	ALLOY STEEL, HEX HEAD, SHORT THREAD, 95 KSI SHEAR, CADMIUM PLATED, MAX TEMP 450°F (232°C)		NO EQUIVALENT	BACB30LE()-() [B]	
				BACB30LE()K() [B] [I]	
				BACB30LJ()-()	
				BACB30LM()-()	
				BACB30LT()-()	
				BACB30MR()K() [B] [I]	
				BACB30NE()-() [A] [L]	
				BACB30NM()K() [I]	
				BACB30NR()K() [I] [V]	
				BACB30US()K() [B] [I]	
				BACB30US()P() [B]	
				NAS6603 THRU NAS6620	
				NAS6703 THRU NAS6720	
BACB30NH()-() [G]	PH13-8Mo CRES, CADMIUM PLATE, 12 POINT HEAD, LONG THREAD, 220 KSI TENSION, MAX TEMP 450°F (232°C)		NO EQUIVALENT	BACB30US()K() [I]	
BACB30NH()U() [G]	PH13-8Mo CRES, PASSIVATED, 12 POINT HEAD, LONG THREAD, 220 KSI TENSION, MAX TEMP 600°F (316°C)		NO EQUIVALENT	BACB30US()-()	
				BACB30US()K() [I]	

BOLT - EXTERNAL WRENCHING - PROTRUDING HEAD
TABLE VI

Fastener Substitution - Bolts
Figure 2 (Sheet 40)

BOEING PROPRIETARY - Copyright © - Unpublished Work - See title page for details.

INITIAL FASTENER OR SPECIFIED REPAIR FASTENER			FASTENER SUBSTITUTION		
PART NUMBER	DESCRIPTION	MATING PART	EQUIVALENT	ALTERNATIVE	MATING PART
BACB30NH()SU() G	PH13-8Mo CRES, PASSIVATED, 12 POINT HEAD, LONG THREAD, 220 KSI TENSION, DRY FILM LUBRICATED, MAX TEMP 450°F (232°C)		NO EQUIVALENT	BACB30US()-() BACB30US()K() I	
BACB30NJ()-() E	H-11 STEEL, DIFFUSED NICKEL-CADMIUM PLATED, 12 POINT HEAD, SHORT THREAD, 125 KSI SHEAR, MAX TEMP 600°F (316°C)		NO EQUIVALENT	BACB30US()K() B I BACB30US()P() B K	
BACB30NJ()K() E	H-11 STEEL, ALUMINUM PIGMENTED COATING, 12 POINT HEAD, SHORT THREAD, 125 KSI SHEAR, MAX TEMP 350°F (177°C)		NO EQUIVALENT	BACB30US()K() B BACB30US()P() B M	
BACB30NJ()L() E	H-11 STEEL, ALUMINUM PIGMENTED COATING, 12 POINT HEAD, SHORT THREAD, 125 KSI SHEAR MAX TEMP 600°F (316°C)		NO EQUIVALENT	BACB30US()K() B I BACB30US()P() B K	
BACB30NL()-() G	PH13-8Mo CRES, CADMIUM PLATED, 12 POINT HEAD, SHORT THREAD, 125 KSI SHEAR, MAX TEMP 450°F (232°C)		NO EQUIVALENT	BACB30US()K() B I BACB30US()P() B	

BOLT - EXTERNAL WRENCHING - PROTRUDING HEAD
TABLE VI

Fastener Substitution - Bolts
Figure 2 (Sheet 41)

BOEING PROPRIETARY - Copyright © - Unpublished Work - See title page for details.

INITIAL FASTENER OR SPECIFIED REPAIR FASTENER			FASTENER SUBSTITUTION		
PART NUMBER	DESCRIPTION	MATING PART	EQUIVALENT	ALTERNATIVE	MATING PART
BACB30NL()SU() G	PH13-8Mo CRES, PASSIVATED, 12 POINT HEAD, SHORT THREAD, 125 KSI SHEAR, DRY FILM LUBRICATED, MAX TEMP 450°F (232°C)		NO EQUIVALENT	BACB30US()-() B	
BACB30NL()U() G	PH13-8Mo CRES, PASSIVATED, 12 POINT HEAD, SHORT THREAD, 125 KSI SHEAR, MAX TEMP 600°F (316°C)		NO EQUIVALENT	BACB30US()-() B	
BACB30NM()C() H	6AL-4V TITANIUM, CADMIUM PLATED, HEX HEAD, LONG THREAD, 160 KSI TENSION, MAX TEMP 450°F (232°C)		NO EQUIVALENT	BACB30LE()K() B I BACB30MR()K() B I BACB30NM()K() I BACB30US()K() B I BACB30US()P() B	
BACB30NM()K()	6AL-4V TITANIUM, ALUMINUM PIGMENTED COATING, HEX HEAD, LONG THREAD, 160 KSI TENSION, MAX TEMP 350°F (177°C)		NO EQUIVALENT	BACB30LE()-() B M BACB30LE()K() B BACB30MR()K() B BACB30US()K() B BACB30US()P() B M	
BACB30NR()C() H	6AL-4V TITANIUM, CADMIUM PLATED, HEX HEAD, SHORT THREAD, 95 KSI SHEAR, MAX TEMP 450°F (232°C)		NO EQUIVALENT	BACB30LE()K() B I BACB30MR()K() B I BACB30NM()K() I BACB30NR()K() I BACB30US()K() B I BACB30US()P() B	

BOLT - EXTERNAL WRENCHING - PROTRUDING HEAD
TABLE VI

Fastener Substitution - Bolts
Figure 2 (Sheet 42)

BOEING PROPRIETARY - Copyright © - Unpublished Work - See title page for details.

INITIAL FASTENER OR SPECIFIED REPAIR FASTENER			FASTENER SUBSTITUTION		
PART NUMBER	DESCRIPTION	MATING PART	EQUIVALENT	ALTERNATIVE	MATING PART
BACB30NR()K()	6AL-4V TITANIUM, ALUMINUM PIGMENTED COATING, HEX HEAD, SHORT THREAD, 95 KSI SHEAR, MAX TEMP 350°F (177°C)		NO EQUIVALENT	BACB30LE()-() B M	
				BACB30LE()K() B	
				BACB30LT()-() M	
				BACB30MR()K() B	
				BACB30NM()K()	
				BACB30US()K() B	
				BACB30US()P() B M	
BACB30PN()-()	INCONEL 718, 12 POINT HEAD, LONG THREAD, MAX TEMP 1200°F (649°C)		NO EQUIVALENT	BACB30LE()U()	
				BACB30US()K() I	
				BACB30US()-() U	
BACB30TR()HT() E	H-11STEEL, DIFFUSED NICKEL-CADMIUM PLATED, 220 KSI MIN TENSILE 125 KSI MIN SHEAR 12 POINT LOW PROFILE, DRILLED HEAD 600°F (316°C)		NO EQUIVALENT	BACB30US()K()H I	
				BACB30US()P()H K	
BACB30TR()K() E	H-11 STEEL, ALUMINUM PIGMENTED COATING, 12 POINT LOW PROFILE HEAD, 220 KSI TENSION, 125 KSI SHEAR, MAX TEMP 350°F (177°C)		NO EQUIVALENT	BACB30US()K()	

BOLT - EXTERNAL WRENCHING - PROTRUDING HEAD
TABLE VI

Fastener Substitution - Bolts
Figure 2 (Sheet 43)

BOEING PROPRIETARY - Copyright © - Unpublished Work - See title page for details.

INITIAL FASTENER OR SPECIFIED REPAIR FASTENER			FASTENER SUBSTITUTION		
PART NUMBER	DESCRIPTION	MATING PART	EQUIVALENT	ALTERNATIVE	MATING PART
BACB30TR()L() E	H-11 STEEL, ALUMINUM PIGMENTED COATING, 12 POINT LOW PROFILE HEAD, 220 KSI TENSION, 125 KSI SHEAR, MAX TEMP 600°F (316°C)		NO EQUIVALENT	BACB30US()K() I	
BACB30TR()T() E	H-11 STEEL, DIFFUSED NICKEL CADMIUM PLATED, 12 POINT LOW PROFILE HEAD, 220 KSI TENSION, 125 KSI SHEAR, MAX TEMP 600°F (316°C)		NO EQUIVALENT	BACB30US()K() I	
BACB30US()K()	INCONEL 718, 12 POINT HEAD, LONG THREAD, 125 KSI SHEAR, BMS 10-85 COATED, MAX TEMP 350°F (177°C)		NO EQUIVALENT	BACB30US()P() M	
BACB30US()P()	NICKEL ALLOY 718, 12 POINT HEAD, 220 KSI TENSILE, 125 KSI SHEAR, LONG THREAD, CADMIUM PLATED, MAX TEMP 450°F (232°C)	BACN10HR OR BACN10HR()CD	NO EQUIVALENT	BACB30US()K() I	BACN10HR()CD R

BOLT - EXTERNAL WRENCHING - PROTRUDING HEAD
TABLE VI

Fastener Substitution - Bolts
Figure 2 (Sheet 44)

BOEING PROPRIETARY - Copyright © - Unpublished Work - See title page for details.

INITIAL FASTENER OR SPECIFIED REPAIR FASTENER			FASTENER SUBSTITUTION		
PART NUMBER	DESCRIPTION	MATING PART	EQUIVALENT	ALTERNATIVE	MATING PART
BACB30UU()-()	INCONEL 718, PASSIVATED, 12 POINT HEAD, SHORT THREAD, 125 KSI SHEAR, MAX TEMP 1200°F (649°C)		NO EQUIVALENT	BACB30US()-() B	
BACB30UU()K()	INCONEL 718, ALUMINUM PIGMENTD COATING, 12 POINT HEAD, SHORT THREAD, 125 KSI SHEAR, MAX TEMP 350°F (177°C)		NO EQUIVALENT	BACB30US()K() B BACB30US()P() B M BACB30UU()P() M	
BACB30UU()P()	NICKEL ALLOY 718, 12 POINT HEAD, 125 KSI SHEAR, SHORT THREAD, CLOSE TOLERANCE, CADMIUM PLATED, MAX TEMP 450°F (232°C)		NO EQUIVALENT	BACB30US()P() B BACB30US()K() B I BACB30UU()K() I	
BACB30XJ()K()	6AL-4V TITANIUM, HEX HEAD, 150 KSI TENSILE, LONG THREAD, ALUMINUM PIGMENTED COATING	NAS1805-()L	NO EQUIVALENT	BACB30XL()K() B	NAS1805-()L R

BOLT - EXTERNAL WRENCHING - PROTRUDING HEAD
TABLE VI

Fastener Substitution - Bolts
Figure 2 (Sheet 45)

BOEING PROPRIETARY - Copyright © - Unpublished Work - See title page for details.

INITIAL FASTENER OR SPECIFIED REPAIR FASTENER			FASTENER SUBSTITUTION		
PART NUMBER	DESCRIPTION	MATING PART	EQUIVALENT	ALTERNATIVE	MATING PART
BACB30XL()K()	6AL-4V TITANIUM, 12 POINT HEAD, 150 KSI TENSILE, 90 KSI SHEAR, ALUMINUM PIGMENTED COATING, MAX TEMP 350°F (177°C)	NAS1805-()L	NO EQUIVALENT	NO ALTERNATIVE	
BACB30XN()K()	6AL-4V TITANIUM, HEX HEAD, 90 KSI SHEAR, SHORT THREAD, ALUMINUM PIGMENTED COATING		NO EQUIVALENT	BACB30XJ()K()	
				BACB30XL()K() [B]	
BACB30ZB()-()	ALLOY STEEL, HEX HEAD, SHORT THREAD, CLOSE TOLERANCE CADMIUM PLATED, MAX TEMP 450°F (232°C)		NO EQUIVALENT	BACB30LE()-() [B]	
				BACB30LE()K() [B] [I]	
				BACB30LJ()-()	
				BACB30LM()-()	
				BACB30LT()-()	
				BACB30NE()-() [A] [L]	
				BACB30NF()-()	
				BACB30NR()K() [I] [V]	
				BACB30US()K() [B] [I]	
				BACB30US()P() [B]	
				NAS6603 THRU NAS6620	
				NAS6703 THRU NAS6720	

BOLT - EXTERNAL WRENCHING - PROTRUDING HEAD
TABLE VI

Fastener Substitution - Bolts
Figure 2 (Sheet 46)

BOEING PROPRIETARY - Copyright © - Unpublished Work - See title page for details.

INITIAL FASTENER OR SPECIFIED REPAIR FASTENER			FASTENER SUBSTITUTION		
PART NUMBER	DESCRIPTION	MATING PART	EQUIVALENT	ALTERNATIVE	MATING PART
NAS1103 THRU NAS1120	ALLOY STEEL, HEX HEAD, SHORT THREAD, CADMIUM PLATED, MAX TEMP 450°F (232°C)		NO EQUIVALENT	BACB30LE()-() [B]	
				BACB30LE()K() [B] [I]	
				BACB30LJ()-()	
				BACB30LM()-()	
				BACB30LT()-()	
				BACB30NE()-() [A] [L]	
				BACB30NF()-()	
				BACB30NR()K() [I] [V]	
				BACB30US()K() [B] [I]	
				BACB30US()P() [B]	
				BACB30ZB()-()	
				NAS6603 THRU NAS6620	
				NAS6703 THRU NAS6720	
NAS6603 THRU NAS6620	ALLOY STEEL, CADMIUM PLATED, HEX HEAD, LONG THREAD, 160 KSI TENSION MAX TEMP 450°F (232°C)		BACB30NE()-()	BACB30LE()-() [B]	
				BACB30LE()K() [B] [I]	
				BACB30LM()-()	
				BACB30MR()K() [B] [I]	
				BACB30NF()-()	
				BACB30NM()K() [I]	
				BACB30US()K() [B] [I]	
				BACB30US()P() [B]	
				NAS6703 THRU NAS6720	
NAS6703 THRU NAS6720	A286 CRES, CADMIUM PLATED, HEX HEAD, LONG THREAD, 160 KSI TENSION, MAX TEMP 450°F (232°C)		BACB30LM()-()	BACB30US()P() [B]	

BOLT - EXTERNAL WRENCHING - PROTRUDING HEAD
TABLE VI

Fastener Substitution - Bolts
Figure 2 (Sheet 47)

BOEING PROPRIETARY - Copyright © - Unpublished Work - See title page for details.

INITIAL FASTENER OR SPECIFIED REPAIR FASTENER			FASTENER SUBSTITUTION		
PART NUMBER	DESCRIPTION	MATING PART	EQUIVALENT	ALTERNATIVE	MATING PART
NAS6703A() THRU NAS6720A()	A-286 CRES, HEX HEAD, CLOSE TOLERANCE, 160 KSI TENSILE, 95 KSI SHEAR, LONG THREAD, UNDRILLED, ALUMINUM PIGMENTED COATING, NON-LOCKING		NO EQUIVALENT	BACB30LE()-() [B] [M]	
				BACB30LE()K() [B]	
				BACB30LM()-() [M]	
				BACB30MR()K() [B]	
				BACB30NM()K()	
				BACB30US()K() [B]	
				BACB30US()P() [B] [M]	
				NAS6703-() THRU NAS6720-() [M]	
NAS6703AD() THRU NAS6720AD()	A-286 CRES, HEX HEAD, CLOSE TOLERANCE, 160 KSI TENSILE, 95 KSI SHEAR, LONG THREAD, DRILLED, ALUMINUM PIGMENTED COATING, NON-LOCKING	BACN10JD() OR BACN11N() OR MS14144	NO EQUIVALENT	BACB30NM()DK()	[X]
				NAS6703D() THRU NAS6720D() [M] [N]	
NAS6703U THRU NAS6720U	A286 CRES, PASSIVATED, HEX HEAD, LONG THREAD, 160 KSI TENSION, MAX TEMP 900°F (482°C)		BACB30LM()U()	BACB30LE()U() [B]	
				BACB30PN()-() [B]	
				BACB30US()-() [B] [U]	

BOLT - EXTERNAL WRENCHING - PROTRUDING HEAD
TABLE VI

Fastener Substitution - Bolts
Figure 2 (Sheet 48)

BOEING PROPRIETARY - Copyright © - Unpublished Work - See title page for details.

INITIAL FASTENER OR SPECIFIED REPAIR FASTENER			FASTENER SUBSTITUTION		
PART NUMBER	DESCRIPTION	MATING PART	EQUIVALENT	ALTERNATIVE	MATING PART
BACB30AB-P()-()	ALLOY STEEL 100° CLOSE TOLERANCE 160 KSI PHILLIPS RECESS, SHORT THREAD, DRILLED, CADMIUM PLATED, MAX TEMP 450°F (232°C)		NO EQUIVALENT	BACB30LH()D() BACB30LR()D() BACB30LU()D()	X
BACB30AB-P()-()A	ALLOY STEEL 100° CLOSE TOLERANCE 160 KSI PHILLIPS RECESS, SHORT THREAD, UNDRILLED, CADMIUM PLATED, MAX TEMP 450°F (232°C)		NO EQUIVALENT	BACB30LH()-() BACB30LP()-() BACB30LR()-() BACB30LU()-() BACB30MS()K() I BACB30NN()K() I	
BACB30EL()-()	ALLOY STEEL, CADMIUM PLATED, HI-TORQUE RECESS, 100° REDUCED HEAD, SHORT THREAD, 95 KSI SHEAR, MAX TEMP 450°F (232°C)		NO EQUIVALENT	BACB30EL()C() BACB30EL()CN() BACB30NU()K() I BACB30VF()K() I NAS8703 THRU NAS8712	
BACB30EL()CN()	ALLOY STEEL, DIFFUSED-NICKEL CADMIUM PLATED, HI-TORQUE, SHORT THREAD, REDUCED HEAD, 95 KSI SHEAR, MAX TEMP 600°F (316°C)		NO EQUIVALENT	BACB30NU()K() I BACB30VF()K() I NAS8703 THRU NAS8712 K	
BACB30FA()-()P	ALLOY STEEL, CADMIUM PLATED, HI-TORQUE RECESS, SELF-LOCKING, 100° HEAD, MAX TEMP 450°F (232°C)		NO EQUIVALENT	BACB30FA()R()P	

BOLT - RECESS DRIVE - FLUSH HEAD
TABLE VII

Fastener Substitution - Bolts
Figure 2 (Sheet 49)

BOEING PROPRIETARY - Copyright © - Unpublished Work - See title page for details.

INITIAL FASTENER OR SPECIFIED REPAIR FASTENER			FASTENER SUBSTITUTION		
PART NUMBER	DESCRIPTION	MATING PART	EQUIVALENT	ALTERNATIVE	MATING PART
BACB30FB()-()	ALLOY STEEL CADMIUM PLATED, HI-TORQUE RECESS, 100° REDUCED HEAD LONG THREAD, 160 KSI TENSION MAX TEMP 450°F (232°C)		NO EQUIVALENT	NO ALTERNATIVE	
BACS12GP3K()	SCREW, 6AL-4V TITANIUM, ALUMINUM PIGMENTED COATING, CROSS RECESS, 100° HEAD, POINTED, FULL THREADED, MAX TEMP 350°F (177°C)		NO EQUIVALENT	BACS12GM3-() [A] [L] [M] BACS12GP3L() BACS12GR3L()	
BACB30LH()-()	A286 CRES, CADMIUM PLATED, CROSS RECESS, 100° HEAD, SHORT THREAD, 95 KSI SHEAR, MAX TEMP 450°F (232°C)		NO EQUIVALENT	BACB30LP()-() BACB30LR()-() BACB30LU()-() [A] [L] BACB30MS()K() [I] BACB30NN()K() [I]	
BACB30LH()U()	A286 CRES, PASSIVATED, CROSS RECESS, 100° HEAD, SHORT THREAD, 95 KSI SHEAR, MAX TEMP 900°F (482°C)		NO EQUIVALENT	BACB30LP()U() BACB30LR()U()	

BOLT - RECESS DRIVE - FLUSH HEAD
TABLE VII

Fastener Substitution - Bolts
Figure 2 (Sheet 50)

BOEING PROPRIETARY - Copyright © - Unpublished Work - See title page for details.

INITIAL FASTENER OR SPECIFIED REPAIR FASTENER			FASTENER SUBSTITUTION		
PART NUMBER	DESCRIPTION	MATING PART	EQUIVALENT	ALTERNATIVE	MATING PART
BACB30LL()-()	A286 CRES, CADMIUM PLATED, DOVETAIL RECESS, 100° REDUCED HEAD, SHORT THREAD, 95 KSI SHEAR, MAX TEMP 450°F (232°C)		NO EQUIVALENT	BACB30EL()-() [A] [L] BACB30EL()CN() [A] [L] BACB30NU()K() [I] BACB30UW()K() [I] BACB30UW()P() BACB30VF()K() [I]	
BACB30LL()U()	A286 CRES, PASSIVATED, DOVETAIL RECESS, 100° REDUCED HEAD, SHORT THREAD, 95 KSI SHEAR, MAX TEMP 900°F (482°C)		NO EQUIVALENT	BACB30UW()-()	
BACB30LP()-()	A286 CRES, CAD CADMIUM PLATED, HI-TORQUE RECESS, 100° HEAD, LONG THREAD, 160 KSI TENSION, MAX TEMP 450°F (232°C)		NO EQUIVALENT	BACB30LR()-() [N] BACB30LU()-() [A] [L] [N] BACB30NN()K() [I] [N]	
BACB30LP()U()	A286 CRES, PASSIVATED, HI-TORQUE RECESS, 100° HEAD, LONG THREAD, 160 KSI TENSION, MAX TEMP 900°F (482°C)		NO EQUIVALENT	BACB30LR()U() [N]	

BOLT - RECESS DRIVE - FLUSH HEAD
TABLE VII

Fastener Substitution - Bolts
Figure 2 (Sheet 51)

BOEING PROPRIETARY - Copyright © - Unpublished Work - See title page for details.

INITIAL FASTENER OR SPECIFIED REPAIR FASTENER			FASTENER SUBSTITUTION		
PART NUMBER	DESCRIPTION	MATING PART	EQUIVALENT	ALTERNATIVE	MATING PART
BACB30LR()-()	A286 CRES, 100° HEAD, CROSS RECESS, LONG THREAD, CLOSE TOLERANCE, CADMIUM PLATED, 160 KSI TENSION, MAX TEMP 450°F (232°C)		NO EQUIVALENT	BACB30LP()-() BACB30LU()-() [A] [L] BACB30NN()K() [I]	
BACB30LR()K()	A286 CRES, 100° HEAD, CROSS RECESS, LONG THREAD, CLOSE TOLERANCE, ALUMINUM PIGMENTED COATING, 160 KSI TENSION, MAX TEMP 350°F (177°C)		NO EQUIVALENT	BACB30LP()-() [M] BACB30LR()-() [M] BACB30LU()-() [A] [L] [M] BACB30MS()K() [V] BACB30NN()K()	
BACB30LR()DK()		BACN10JD() OR BACN11N() OR MS14144		BACB30LR()D() [M]	[X]
BACB30LR()U()	A286 CRES, 100° HEAD, CROSS RECESS, LONG THREAD, CLOSE TOLERANCE, PASSIVATED, 160 KSI TENSION, MAX TEMP 900°F (482°C)		NO EQUIVALENT	BACB30LP()U()	
BACB30LU()-()	ALLOY STEEL, 100° HEAD, CROSS RECESS, LONG THREAD, 95 KSI SHEAR, CLOSE TOLERANCE, ALUMINUM PIGMENTED COATING, MAX TEMP 450°F (232°C)		NO EQUIVALENT	BACB30LP()-() BACB30LR()-() BACB30NN()K() [I]	

BOLT - RECESS DRIVE - FLUSH HEAD
TABLE VII

Fastener Substitution - Bolts
Figure 2 (Sheet 52)

BOEING PROPRIETARY - Copyright © - Unpublished Work - See title page for details.

INITIAL FASTENER OR SPECIFIED REPAIR FASTENER			FASTENER SUBSTITUTION		
PART NUMBER	DESCRIPTION	MATING PART	EQUIVALENT	ALTERNATIVE	MATING PART
BACB30MS()C() [H]	6AL-4V TITANIUM, 100° HEAD, DOVETAIL RECESS, LONG THREAD, CADMIUM PLATED, 160 KSI TENSION, MAX TEMP 350°F (177°C)		NO EQUIVALENT	BACB30MS()K() [I] BACB30NN()K() [I] BACB30WP()K()R [I]	
BACB30MS()K()	6AL-4V TITANIUM, 100° HEAD, DOVETAIL RECESS, LONG THREAD, ALUMINUM PIGMENTED COATING, 160 KSI TENSION, MAX TEMP 350°F (177°C)		NO EQUIVALENT	BACB30NN()K() BACB30WP()K()R	
BACB30NN()C() [H]	6AL-4V TITANIUM, 100° HEAD, CROSS RECESS, LONG THREAD, CADMIUM PLATED, 160 KSI, TENSION, MAX TEMP 450°F (232°C)		NO EQUIVALENT	BACB30MS()K() [I] [Y] BACB30NN()K() [I] BACB30WP()K()R [I]	
BACB30NN()K()	6AL-4V TITANIUM, 100° HEAD, CROSS RECESS, LONG THREAD, ALUMINUM PIGMENTED COATING, 160 KSI TENSION, MAX TEMP 350°F (177°C)		NO EQUIVALENT	BACB30MS()K() [Y] BACB30WP()K()R	

BOLT - RECESS DRIVE - FLUSH HEAD
TABLE VII

Fastener Substitution - Bolts
Figure 2 (Sheet 53)

BOEING PROPRIETARY - Copyright © - Unpublished Work - See title page for details.

INITIAL FASTENER OR SPECIFIED REPAIR FASTENER			FASTENER SUBSTITUTION		
PART NUMBER	DESCRIPTION	MATING PART	EQUIVALENT	ALTERNATIVE	MATING PART
BACB30NU()C() [H]	6AL-4V TITANIUM, 100° REDUCED HEAD, DOVETAIL RECESS, SHORT THREAD, 95 KSI SHEAR, CADMIUM PLATED, MAX TEMP 450°F (232°C)		NO EQUIVALENT	BACB30NU()K() [I] BACB30VF()K() [I]	
BACB30NU()K()	6AL-4V TITANIUM, 100° REDUCED HEAD, DOVETAIL RECESS, SHORT THREAD, 95 KSI SHEAR, ALUMINUM PIGMENTED COATING, MAX TEMP 350°F (177°C)		NO EQUIVALENT	BACB30VF()K()	
BACB30NU()R()	6AL-4V TITANIUM, 100° REDUCED HEAD, DOVETAIL RECESS, SHORT THREAD, 95 KSI SHEAR, PHOSPHATE FLUORIDE COATED, CETYL ALCOHOL LUBRICATED		NO EQUIVALENT	BACB30NU()K() [I] BACB30VF()K() [I] BACB30VF()R()	
BACB30SW()-() [E]	H-11 STEEL, DIFFUSED NICKEL CADMIUM PLATED,100° HEAD, HI-TORQUE, 125 KSI SHEAR, LONG THREAD		NO EQUIVALENT	[C]	
BACB30SW()K() [E]	H-11 STEEL, ALUMINUM PIGMENTED COATING, 100° HEAD, HI-TORQUE, 125 KSI SHEAR, LONG THREAD		NO EQUIVALENT	[C]	

BOLT - RECESS DRIVE - FLUSH HEAD
TABLE VII

Fastener Substitution - Bolts
Figure 2 (Sheet 54)

BOEING PROPRIETARY - Copyright © - Unpublished Work - See title page for details.

INITIAL FASTENER OR SPECIFIED REPAIR FASTENER			FASTENER SUBSTITUTION		
PART NUMBER	DESCRIPTION	MATING PART	EQUIVALENT	ALTERNATIVE	MATING PART
BACB30TP3-()	ALLOY STEEL, CADMIUM PLATED, CROSS RECESS, 100° HEAD, POINTED, MAX TEMP 450°F (232°C)		NO EQUIVALENT	BACB30LH3-() BACB30LP3-() BACB30LU3-() [A] [L] BACB30NN3K() [I]	
BACB30UR()K()	6AL-4V TITANIUM, ALUMINUM PIGMENTED COATING, 100° REDUCED HEAD, SHORT THREAD, OFFSET CRUCIFORM 95 KSI SHEAR		NO EQUIVALENT	BACB30VF()K()	
BACB30UR()R()	6AL-4V TITANIUM, PHOSPHATE FLOURIDE COATED, CETYL ALCOHOL LUBRICATED, 100° REDUCED HEAD, SHORT THREAD, OFFSET CRUCIFORM 95 KSI SHEAR		NO EQUIVALENT	BACB30VF()K() [I] BACB30VF()R()	
BACB30UW()P()	NICKEL ALLOY 718, 100° REDUCED HEAD, DOVETAIL RECESS, 125 KSI SHEAR, SHORT THREAD, CADMIUM PLATED, MAX TEMP 450°F (232°C)		NO EQUIVALENT	BACB30UW()K() [I]	

BOLT - RECESS DRIVE - FLUSH HEAD
TABLE VII

Fastener Substitution - Bolts
Figure 2 (Sheet 55)

BOEING PROPRIETARY - Copyright © - Unpublished Work - See title page for details.

INITIAL FASTENER OR SPECIFIED REPAIR FASTENER			FASTENER SUBSTITUTION		
PART NUMBER	DESCRIPTION	MATING PART	EQUIVALENT	ALTERNATIVE	MATING PART
BACB30VF()K()	6AL-4V TITANIUM, ALUMINUM PIGMENTED COATING, CROSS RECESS, 100° REDUCED HEAD, SHORT THREAD, 95 KSI SHEAR, MAX TEMP 350°F (177°C)		NO EQUIVALENT	NO ALTERNATIVE	
BACB30VF()R()	6AL-4V TITANIUM, 100° REDUCED HEAD, CROSS RECESS, 95 KSI SHEAR, SHORT THREAD, PHOSPHATE FLUORIDE COATED, CETYL, ALCOHOL LUBRICATED		NO EQUIVALENT	BACB30VF()K() I	
BACB30WP()P()R	NICKEL ALLOY 718, 100° HEAD, DOVETAIL RECESS, 125 KSI SHEAR, LONG THREAD, CADMIUM PLATED, MAX TEMP 450°F (232°C)		NO EQUIVALENT	BACB30WP()K()R I	
BACB30XM()K()	6AL-4V TITANIUM, 100° HEAD, CROSS RECESS, 150 KSI TENSILE, LONG THREAD, ALUMINUM PIGMENTED COATING, MAX TEMP 350°F (177°C)	NAS1805-()L	NO EQUIVALENT	NO ALTERNATIVE	

BOLT - RECESS DRIVE - FLUSH HEAD
TABLE VII

Fastener Substitution - Bolts
Figure 2 (Sheet 56)

BOEING PROPRIETARY - Copyright © - Unpublished Work - See title page for details.

INITIAL FASTENER OR SPECIFIED REPAIR FASTENER			FASTENER SUBSTITUTION		
PART NUMBER	DESCRIPTION	MATING PART	EQUIVALENT	ALTERNATIVE	MATING PART
BACB30EM-P()-()	ALLOY STEEL, DIFFUSED NICKEL-CADMIUM PLATED, DOVETAIL RECESS, CLOSE TOLERANCE, PAN HEAD, SHORT THREAD, 160 KSI TENSION, MAX TEMP 600°F (316°C)		NO EQUIVALENT	BACB30EM-P()L() [A] [L]	
				BACB30LK()-()	
				BACB30NT()K() [I]	
				NAS623-()-() [A] [L]	
BACB30EM-P()L()	ALLOY STEEL, DIFFUSED NICKEL-CADMIUM PLATED, DOVETAIL RECESS, CLOSE TOLERANCE, PAN HEAD, LONG THREAD, 160 KSI TENSION, MAX TEMP 600°F (316°C)		NO EQUIVALENT	BACB30LE()K() [B] [I]	
				BACB30LM()-()	
				BACB30MR()K() [B] [I]	
				BACB30NM()K() [I]	
				BACB30US()K() [B] [I]	
				NAS6603 THRU NAS6620 [L]	
				NAS6703 THRU NAS6720	
BACB30LK()-()	A286 CRES, CADMIUM PLATED, CROSS RECESS, PAN HEAD, SHORT THREAD, 95 KSI SHEAR, MAX TEMP 450°F (232°C)		NO EQUIVALENT	BACB30LE()-() [B]	
				BACB30LE()K() [B] [I]	
				BACB30LJ()-()	
				BACB30LM()-()	
				BACB30LT()-()	
				BACB30MR()K() [B] [I]	
				BACB30NE()-() [A] [L]	
				BACB30NM()K() [I]	
				BACB30US()K() [B] [I]	
				BACB30US()P() [B]	
				NAS6603 THRU NAS6620 [A] [L]	
				NAS6703 THRU NAS6720	

BOLT - RECESS DRIVE - PROTRUDING HEAD
TABLE VIII

Fastener Substitution - Bolts
Figure 2 (Sheet 57)

BOEING PROPRIETARY - Copyright © - Unpublished Work - See title page for details.

INITIAL FASTENER OR SPECIFIED REPAIR FASTENER			FASTENER SUBSTITUTION		
PART NUMBER	DESCRIPTION	MATING PART	EQUIVALENT	ALTERNATIVE	MATING PART
BACB30LK()U()	A286 CRES, PASSIVATED, CROSS RECESS, PAN HEAD, SHORT THREAD, 95 KSI SHEAR, MAX TEMP 900°F (482°C)		NO EQUIVALENT	BACB30LE()U() [B]	
				BACB30LJ()U()	
				BACB30LM()U()	
				BACB30LT()U()	
				BACB30US()-() [B]	
				NAS6703U THRU NAS6720U	
BACB30NT()C() [H]	6AL-4V TITANIUM, CAD PLATED, PHILLIPS RECESS SHORT THREADED. 95 KSI MAX TEMP 450°F (232°C)		NO EQUIVALENT	BACB30LE()K() [B] [I]	
				BACB30LK()-()	
				BACB30MR()K() [B] [I]	
				BACB30NJ()K() [I]	
				BACB30NM()K() [I]	
				BACB30NR()K() [I]	
				BACB30NT()K() [I]	
BACB30NT()K()	6AL-4V TITANIUM, ALUMINUM PIGMENTED COATING, CROSS RECESS, PAN HEAD, SHORT THREAD 95 KSI SHEAR, MAX TEMP 350°F (177°C)		NO EQUIVALENT	BACB30LE()-() [B] [M]	
				BACB30LE()K() [B]	
				BACB30LJ()-() [M]	
				BACB30LK()-() [M]	
				BACB30LM()-() [M]	
				BACB30LT()-() [M]	
				BACB30MR()K() [B]	
				BACB30NE()-() [A] [L] [M]	
				BACB30NF()-() [A] [L] [M]	
				BACB30NM()K()	
				BACB30NR()K()	
				BACB30US()K() [B]	
				BACB30US()P() [B] [M]	
				NAS6603 THRU NAS6620 [A] [L] [M]	
				NAS6703 THRU NAS6720 [M]	

BOLT - RECESS DRIVE - PROTRUDING HEAD
TABLE VIII

Fastener Substitution - Bolts
Figure 2 (Sheet 58)

BOEING PROPRIETARY - Copyright © - Unpublished Work - See title page for details.

INITIAL FASTENER OR SPECIFIED REPAIR FASTENER			FASTENER SUBSTITUTION		
PART NUMBER	DESCRIPTION	MATING PART	EQUIVALENT	ALTERNATIVE	MATING PART
NAS623-()-()	SCREW, ALLOY STEEL, CADMIUM PLATED, PHILLIPS RECESS, PAN HEAD, SHORT THREAD, 95 KSI SHEAR, MAX TEMP 450°F (232°C)		NO EQUIVALENT	BACB30LE()-() [B]	
				BACB30LE()K() [B] [I]	
				BACB30LJ()-()	
				BACB30LK()-()	
				BACB30LM()-()	
				BACB30LT()-()	
				BACB30MR()K() [B] [I]	
				BACB30NM()K() [I]	
				BACB30NR()K() [I]	
				BACB30NT()K() [I]	
NAS623-()-()W	SCREW, ALLOY STEEL, CADMIUM PLATED, PHILLIPS RECESS, PAN HEAD, SHORT THREAD, 95 KSI SHEAR, MAX TEMP 450°F (232°C)		NO EQUIVALENT	BACB30LE()-() [B]	
				BACB30LE()K() [B] [I]	
				BACB30LJ()-()	
				BACB30LK()-()	
				BACB30LM()-()	
				BACB30LT()-()	
				BACB30MR()K() [B] [I]	
				BACB30NM()K() [I]	
				BACB30NR()K() [I]	
				BACB30NT()T() [I]	
				NAS623-()-() [L]	

BOLT - RECESS DRIVE - PROTRUDING HEAD
TABLE VIII

Fastener Substitution - Bolts
Figure 2 (Sheet 59)

BOEING PROPRIETARY - Copyright © - Unpublished Work - See title page for details.

INITIAL FASTENER OR SPECIFIED REPAIR FASTENER			FASTENER SUBSTITUTION		
PART NUMBER	DESCRIPTION	MATING PART	EQUIVALENT	ALTERNATIVE	MATING PART
BACB30LB()C()	A286 CRES SLEEVE, PASSIVATED, POSITIVE MECHANICAL LOCK, PULL TYPE, MAX TEMP 450°F (232°C)		NO EQUIVALENT	MS21141-()()	
BACB30LB()C()CD	A286 CRES SLEEVE, CADMIUM PLATED, POSITIVE MECHANICAL LOCK, PULL TYPE, MAX TEMP 450°F (232°C)		NO EQUIVALENT	MS21141-()()P	
BACB30LB()-()	ALLOY STEEL SLEEVE, CADMIUM PLATED, POSITIVE MECHANICAL LOCK, PULL TYPE, MAX TEMP 450°F (232°C)		NO EQUIVALENT	MS90354-()()	
BACB30UY()-()	6AL-4V TITANIUM, PHOSPHATE FLUORIDE COATED		NO EQUIVALENT	BACB30VL()-() P BACB30VL()-()D BACB30VL()C()D	

BOLT - BLIND - PROTRUDING HEAD
TABLE IX

Fastener Substitution - Bolts
Figure 2 (Sheet 60)

BOEING PROPRIETARY - Copyright © - Unpublished Work - See title page for details.

INITIAL FASTENER OR SPECIFIED REPAIR FASTENER			FASTENER SUBSTITUTION		
PART NUMBER	DESCRIPTION	MATING PART	EQUIVALENT	ALTERNATIVE	MATING PART
BAC30VL()-()	LOW PROFILE HEAD, SHEAR, LIGHTWEIGHT, 304 CRES SLEEVE, TITANIUM ALLOY NUT		NO EQUIVALENT	BACB30VL()-()D BACB30VL()C()D	
BACB30VL()-()D	LOW PROFILE HEAD, SHEAR, LIGHTWEIGHT, 304 CRES SLEEVE, TITANIUM ALLOY NUT, DISPOSABLE DRIVE NUT		NO EQUIVALENT	BACB30VL()-() P BACB30VL()C()D	
BACB30VL()C()D	LOW PROFILE HEAD, SHEAR, LIGHTWEIGHT, 304 CRES SLEEVE, A-286 SS NUT, DISPOSABLE DRIVE NUT		NO EQUIVALENT	BACB30VL()-() P BACB30VL()-()D	
MS21141-()()	A286 CRES SLEEVE, PASSIVATED, POSITIVE MECHANICAL LOCK, PULL TYPE, MAX MAX TEMP 1200°F (649°C)		NO EQUIVALENT	BACB30LB()C()	
MS21141-()()P	A286 CRES SLEEVE, CADMIUM PLATED, POSITIVE MECHANICAL LOCK, PULL TYPE, MAX TEMP 450°F (232°C)		NO EQUIVALENT	BACB30LB()C()CD	
MS90354-()()	ALLOY STEEL SLEEVE, CADMIUM PLATED, POSITIVE MECHANICAL LOCK, PULL TYPE, MAX TEMP 450°F (232°C)		NO EQUIVALENT	BACB30LB()-()	

BOLT - BLIND - PROTRUDING HEAD
TABLE IX

Fastener Substitution - Bolts
Figure 2 (Sheet 61)

BOEING PROPRIETARY - Copyright © - Unpublished Work - See title page for details.

INITIAL FASTENER OR SPECIFIED REPAIR FASTENER			FASTENER SUBSTITUTION		
PART NUMBER	DESCRIPTION	MATING PART	EQUIVALENT	ALTERNATIVE	MATING PART
BACB30LA()C()	A286 CRES SLEEVE, PASSIVATED, 100° HEAD, POSITIVE MECHANICAL LOCK, PULL TYPE, MAX TEMP 1200°F (649°C)		NO EQUIVALENT	MS21140-()()	
BACB30LA()C()CD	A286 CRES SLEEVE, CADMIUM PLATED, 100° HEAD, POSITIVE MECHANICAL LOCK, PULL TYPE, MAX TEMP 450°F (232°C)		NO EQUIVALENT	MS21140-()()P	
BACB30LA()-()	ALLOY STEEL SLEEVE, CADMIUM PLATED, 100° HEAD, POSITIVE MECHANICAL LOCK, PULL TYPE, MAX TEMP 450°F (232°C)		NO EQUIVALENT	MS90353-()()	
BACB30UZ()-()	6AL-4V TITANIUM, PHOSPHATE FLUORIDE COATED, 130° HEAD		NO EQUIVALENT	BACB30VK()-() P BACB30VK()-()D BACB30VK()C()D	
BACB30VK()-()	CRES SLEEVE, 6AL-4V TITANIUM NUT, 130° HEAD, REDUCED SHEAR, LIGHTWEIGHT, PHOSPHATE FLUORIDE TREATED, PASSIVATED SLEEVE, MAX TEMP 350°F (177°C)		NO EQUIVALENT	BACB30VK()-()D BACB30VK()C()D	

BOLT - BLIND - FLUSH HEAD
TABLE X
Fastener Substitution - Bolts
Figure 2 (Sheet 62)

BOEING PROPRIETARY - Copyright © - Unpublished Work - See title page for details.

INITIAL FASTENER OR SPECIFIED REPAIR FASTENER			FASTENER SUBSTITUTION		
PART NUMBER	DESCRIPTION	MATING PART	EQUIVALENT	ALTERNATIVE	MATING PART
BACB30VK()-()D	CRES SLEEVE, 130° HEAD, REDUCED SHEAR, LIGHTWEIGHT, PHOSPHATE FLUORIDE TREATED, PASSIVATED SLEEVE, DISPOSABLE DRIVE NUT, MAX TEMP 350°F (177°C)		NO EQUIVALENT	BACB30VK()-() P BACB30VK()C()D	
BACB30VK()C()D	CRES SLEEVE, A-286 CRES NUT, 130° HEAD, REDUCED SHEAR, LIGHTWEIGHT, PASSIVATED NUT AND SLEEVE, DISPOSABLE DRIVE NUT, MAX TEMP 350°F (177°C)		NO EQUIVALENT	BACB30VK()-() P BACB30VK()-()D	
MS21140-()()	A286 CRES SLEEVE, PASSIVATED, 100° HEAD, POSITIVE MECHANICAL LOCK, PULL TYPE, MAX TEMP 1200°F (649°C)		NO EQUIVALENT	BACB30LA()C()	
MS21140-()()P	A286 CRES SLEEVE, CADMIUM PLATED, 100° HEAD, POSITIVE MECHANICAL LOCK, PULL TYPE, MAX TEMP 450°F (232°C)		NO EQUIVALENT	BACB30LA()C()CD	

BOLT - BLIND - FLUSH HEAD
TABLE X

Fastener Substitution - Bolts
Figure 2 (Sheet 63)

BOEING PROPRIETARY - Copyright © - Unpublished Work - See title page for details.

INITIAL FASTENER OR SPECIFIED REPAIR FASTENER			FASTENER SUBSTITUTION		
PART NUMBER	DESCRIPTION	MATING PART	EQUIVALENT	ALTERNATIVE	MATING PART
MS90353-()()	ALLOY STEEL SLEEVE, CADMIUM PLATED, 100° HEAD, POSITIVE MECHANICAL LOCK, PULL TYPE, MAX TEMP 450°F (232°C)		NO EQUIVALENT	BACB30LA()-()	

BOLT - BLIND - FLUSH HEAD
TABLE X

Fastener Substitution - Bolts
Figure 2 (Sheet 64)

BOEING PROPRIETARY - Copyright © - Unpublished Work - See title page for details.

INITIAL FASTENER OR SPECIFIED REPAIR FASTENER			FASTENER SUBSTITUTION		
PART NUMBER	DESCRIPTION	MATING PART	EQUIVALENT	ALTERNATIVE	MATING PART
BACB30MW()C() [H]	6AL-4V TITANIUM, CADMIUM PLATED, CETYL ALCOHOL LUBRICATED, SHEAR HEAD, 95 KSI SHEAR, MAX TEMP 450°F (232°C)		NO EQUIVALENT	BACB30MW()K() [I]	
				BACB30PB()-() [A] [L]	
				BACB30PB()A()	
				BACB30PB()AK() [I]	
				BACB30PE()-() [A] [L]	
				BACB30PE()A()	
				BACB30PE()AK() [I]	
BACB30MW()K()	6AL-4V TITANIUM, BMS 10-85 COATED, CETYL ALCOHOL LUBRICATED, SHEAR HEAD, 95 KSI SHEAR, MAX TEMP 350°F (177°C)		NO EQUIVALENT	BACB30PB()-() [A] [L] [M]	
				BACB30PB()A() [M]	
				BACB30PB()AK()	
				BACB30PE()-() [A] [L] [M]	
				BACB30PE()A() [M]	
				BACB30PE()AK()	
BACB30PB()-()	ALLOY STEEL, CADMIUM PLATED, CETYL ALCOHOL LUBRICATED, SHEAR HEAD, 108 KSI SHEAR, MAX TEMP 450°F (232°C)		NO EQUIVALENT	BACB30BP()A()	
				BACB30PE()-() [L]	
				BACB30PE()A()	
				BACB30PE()AK() [I]	
				BACB30PB()AK() [I]	
BACB30PB()A()	A286 CRES, CADMIUM PLATED, CETYL ALCOHOL LUBRICATED, SHEAR HEAD, 110 KSI SHEAR, MAX TEMP 450°F (232°C)		NO EQUIVALENT	BACB30PE()A()	
				BACB30PE()AK() [I]	
				BACB30PB()AK() [I]	
BACB30PB()AK()	A286 CRES, BMS 10-85 COATED, CETYL ALCOHOL LUBRICATED, SHEAR HEAD, 110 KSI SHEAR, MAX TEMP 350°F (177°C)		NO EQUIVALENT	BACB30PB()A() [M]	
				BACB30PE()A() [M]	
				BACB30PE()AK()	

BOLT - TAPER SHANK - PROTRUDING HEAD
TABLE XI

Fastener Substitution - Bolts
Figure 2 (Sheet 65)

BOEING PROPRIETARY - Copyright © - Unpublished Work - See title page for details.

INITIAL FASTENER OR SPECIFIED REPAIR FASTENER			FASTENER SUBSTITUTION		
PART NUMBER	DESCRIPTION	MATING PART	EQUIVALENT	ALTERNATIVE	MATING PART
BACB30PB()K() [Z]	ALLOY STEEL, BMS 10-85 COATED, CETYL ALCOHOL LUBRICATED, SHEAR HEAD, 108 KSI SHEAR MAX TEMP 600° (316°)		NO EQUIVALENT	BACB30PB()-() [K] [M] BACB30PB()A() [K] [M] BACB30PB()AK() [I] BACB30PE()-() [K] [M] BACB30PE()A() [K] [M] BACB30PE()AK() [I]	
BACB30PE()-()	ALLOY STEEL, CADMIUM PLATED, CETYL ALCOHOL LUBRICATED, TENSION HEAD, 180 KSI TENSION, MAX TEMP 450°F (232°C)		NO EQUIVALENT	BACB30PE()A() BACB30PE()AK() [I]	
BACB30PE()A()	A286 CRES, CAD PLATED, CETYL ALCOHOL LUBRICATED, TENSION HEAD, 200 KSI TENSION, MAX TEMP 450°F (232°C)		NO EQUIVALENT	BACB30PE()AK() [I]	
BACB30PE()AK()	A286 CRES, BMS 10-85 COATED, CETYL ALCOHOL LUBRICATED, TENSION HEAD, 200 KSI TENSION, MAX TEMP 350°F (177°C)		NO EQUIVALENT	BACB30PE()A() [M]	
BACB30PE()K() [Z]	ALLOY STEEL, BMS 10-85 COATED, CETYL ALCOHOL LUBRICATED, TENSION HEAD, 180 KSI TENSION, MAX TEMP 600°F (316°C)		NO EQUIVALENT	BACB30PE()-() [K] [M] BACB30PE()A() [K] [M] BACB30PE()AK() [I]	

BOLT - TAPER SHANK - PROTRUDING HEAD

TABLE XI

Fastener Substitution - Bolts
Figure 2 (Sheet 66)

BOEING PROPRIETARY - Copyright © - Unpublished Work - See title page for details.

INITIAL FASTENER OR SPECIFIED REPAIR FASTENER			FASTENER SUBSTITUTION		
PART NUMBER	DESCRIPTION	MATING PART	EQUIVALENT	ALTERNATIVE	MATING PART
BACB30KD()-()	ALLOY STEEL, CAD PLATED, CETYL ALCOHOL LUBRICATED, SHEAR HEAD, 108 KSI SHEAR, MAX TEMP 450°F (232°C)		NO EQUIVALENT	BACB30KD()A()	
BACB30KD()A()	A286 CRES, CAD PLATED,CETYL ALCOHOL LUBRICATED, SHEAR HEAD, 110 KSI SHEAR, MAX TEMP 450°F (232°C)		NO EQUIVALENT	NO ALTERNATIVE	
BACB30MU()C() [H]	6AL-4V TITANIUM, CAD PLATED, CETYL ALCOHOL LUBRICATED, SHEAR HEAD, 95 KSI SHEAR, MAX TEMP 450° (232°C)		NO EQUIVALENT	BACB30KD()-() [A] [L] BACB30KD()A() BACB30MU()K() [I]	
BACB30MU()K()	6AL-4V TITANIUM, BMS, 10-85 COATED,CETYL ALCOHOL LUBRICATED, SHEAR HEAD, 95 KSI SHEAR, MAX TEMP 350° (177°C)		NO EQUIVALENT	BACB30KD()A() [M] BACB30KD()-() [A] [L] [M]	
BACB30PD()A()	A286 CRES, CAD PLATED,CETYL ALCOHOL LUBRICATED, TENSION HEAD, 200 KSI TENSION, MAX TEMP 450°F (232°C)		NO EQUIVALENT	NO ALTERNATIVE	
BACB30PD()-()	ALLOY STEEL, CAD PLATED, CETYL ALCOHOL LUBRICATED, TENSION HEAD, 180 KSI TENSION, MAX TEMP 450°F (232°C)		NO EQUIVALENT	BACB30PD()A()	

BOLT - TAPER SHANK - FLUSH HEAD
TABLE XI

Fastener Substitution - Bolts
Figure 2 (Sheet 67)

BOEING PROPRIETARY - Copyright © - Unpublished Work - See title page for details.

NOTES

- REFER TO TABLE I FOR THE FASTENER SUBSTITUTION INDEX.
- REFER TO SRM 51-30-2 FOR THE REMOVAL AND THE INSTALLATION OF FASTENERS.
- THE SHEAR AND TENSION TYPE FASTENERS USE DIFFERENT TORQUE VALUES AND INSTALLATION TOOLS. REFER TO SRM 51-30-4.
- REFER TO SRM 51-10-2 FOR THE NECESSARY PROTECTIVE TREATMENT FOR FASTENER INSTALLATION.
- DO NOT USE CADMIUM PLATED FASTENERS IN TITANIUM OR GRAPHITE (CARBON FIBER) STRUCTURE.

[A] APPLY A FILLET SEAL TO THE WET SIDE OF THE FASTENER INSIDE THE FUEL TANK. REFER TO SRM 51-20-4.

[B] DO NOT INSTALL THIS COLLAR OR NUT ON A SLOPED SURFACE.

[C] THIS FASTENER IS NOT PERMITTED IN AREAS WHERE THE TEMPERATURE IS MORE THAN 350°F (177°C)

THIS FASTENER IS NOT PERMITTED IN AREAS WHERE ELECTRICAL CONDUCTIVITY IS REQUIRED. REFER TO BAC5117.

[D] USE A SELF-ALIGNING COLLAR BACC30CH() WHEN THE COLLAR SIDE SLOPE IS MORE THAN 0.5 DEGREES.

[E] THIS FASTENER IS PERMITTED ONLY IN CLOSE REAM OR LARGER HOLES (NON-INTERFERENCE).

[F] DO NOT USE CADMIUM PLATED FASTENERS AS AN ALTERNATIVE FOR BARE OR ALUMINUM COATED FASTENERS WHEN YOU INSTALL FASTENERS THROUGH THE MATERIALS THAT FOLLOW:

- TITANIUM STRUCTURE
- GRAPHITE (CARBON FIBER) STRUCTURE

[G] THESE FASTENERS MUST BE INSTALLED WITH TORQUE-CONTROLLED TOOLING. REFER TO SRM 51-30-4.

[H] THE RECOMMENDED FASTENERS IN ALUMINUM STRUCTURE ARE TITANIUM WITH BMS 10-85 APPLIED, A-286 WITH BMS 10-85 APPLIED, OR CADMIUM-PLATED A-286.

- CADMIUM-PLATED ALLOY-STEEL FASTENERS ARE A STRUCTURALLY ACCEPTABLE ALTERNATIVE.
- HOWEVER, IN A CORROSIVE ENVIRONMENT THE CADMIUM PLATING, WHICH IS A SACRIFICIAL COATING, MAY DISAPPEAR ALLOWING THE ALLOY-STEEL FASTENER TO CORRODE.
- THIS MAY RESULT IN THE RUST-STREAKING OF THE SURROUNDING STRUCTURE AND THE INITIATION OF CORROSION OF ANY ADJACENT ALUMINUM STRUCTURE.

NOTE: ALL THESE FASTENERS, BOTH THE RECOMMENDED AND THE ALTERNATIVES, SHOULD BE INSTALLED WET WITH THE NECESSARY SEALANT MATERIAL.

[I] DO NOT USE ALLOY STEEL FASTENERS AS AN ALTERNATIVE FOR THE CORROSION RESISTANT STEEL (CRES) OR TITANIUM FASTENERS IN:

- AREAS WHERE ANTI-MAGNETIC FASTENERS ARE NECESSARY
- GRAPHITE (CARBON FIBER) STRUCTURE
- CRES STRUCTURE.

[J] SPEAK TO THE BOEING COMPANY FOR FASTENER ALTERNATIVES

Fastener Substitution - Lockbolts
Figure 3 (Sheet 1)

BOEING PROPRIETARY - Copyright © - Unpublished Work - See title page for details.

TYPE OF LOCKBOLT FASTENER	LOCATION OF FASTENER	
	TABLE NUMBER	SHEET NUMBER
LOCKBOLT - PROTRUDING HEAD (SHEAR)	II	3 THROUGH 8
LOCKBOLT - FLUSH HEAD (SHEAR)	III	9 THROUGH 15
LOCKBOLT - PROTRUDING HEAD (TENSION)	IV	16 THROUGH 18
LOCKBOLT - FLUSH HEAD (TENSION)	V	19 THROUGH 21

LOCKBOLT FASTENER SUBSTITUTION INDEX
TABLE I

Fastener Substitution - Lockbolts
Figure 3 (Sheet 2)

BOEING PROPRIETARY - Copyright © - Unpublished Work - See title page for details.

INITIAL FASTENER OR SPECIFIED REPAIR FASTENER			FASTENER SUBSTITUTION		
PART NUMBER	DESCRIPTION	MATING PART	EQUIVALENT	ALTERNATIVE	MATING PART
BACB30AR()-()	ALLOY STEEL, CADMIUM PLATED, 95 KSI SHEAR, LUBRICATED FLAT HEAD, STUMP TYPE, MAX TEMP 250°F (121°C)	BACC30K() OR NAS1080C()	NO EQUIVALENT	BACB30FM()-() [H]	BACC30AG() [A]
					BACC30M() [A] [B]
					BACN10XJ() [A] [B] [G]
				BACB30FM()A()	BACC30AG() [A]
					BACC30M() [A] [B]
					BACN10XJ() [A] [B] [G]
				BACB30GW()-()	BACC30K()
					NAS1080C()
				BACB30GW()A() [H]	BACC30K()
					NAS1080C()
				BACB30VN()K() [C]	BACC30BK()
				BACB30VT()K() [C]	BACC30BL() [A] [B]
					BACC30BQ() [A]
					BACN10YZ() [A] [B] [G]
BACB30CU()-()	ALLOY STEEL CAD PLATED 0.0156 OVERSIZE PULL TYPE GUN DRIVEN	BACC30K() OR NAS1080C()	NO EQUIVALENT	BACB30FP()-()	BACC30AG() [A]
					BACC30M() [A] [B]
					BACN10XJ() [A] [B] [G]
				BACB30MY()K()X [C]	BACC30AG() [A]
					BACC30M() [A] [B]
					BACN10XJ() [A] [B] [G]
				BACB30NX()K()X [C]	BACC30AG() [A]
					BACC30M() [A] [B]
					BACN10XJ() [A] [B] [G]

LOCKBOLT - PROTRUDING HEAD (SHEAR)
TABLE II

Fastener Substitution - Lockbolts
Figure 3 (Sheet 3)

BOEING PROPRIETARY - Copyright © - Unpublished Work - See title page for details.

INITIAL FASTENER OR SPECIFIED REPAIR FASTENER			FASTENER SUBSTITUTION		
PART NUMBER	DESCRIPTION	MATING PART	EQUIVALENT	ALTERNATIVE	MATING PART
BACB30GW()-()	ALLOY STEEL, C.T. SHANK, 1.0 PINTAIL, (PULL TYPE, GUN DRIVEN), CADMIUM PLATED	BACC30K() OR NAS1080C()	NO EQUIVALENT	BACB30FM()-() [H]	BACC30AG() [A]
					BACC30M() [A] [B]
				BACB30FM()A()	BACC30AG() [A]
					BACC30M() [A] [B]
				BACB30MY()K() [C]	BACC30AG() [A]
					BACC30M() [A] [B]
				BACB30VN()K() [C]	BACC30BK()
				BACB30VT()K() [C]	BACC30BL() [A] [B]
					BACC30BQ() [A]
					BACN10YZ() [A] [B] [G]
					BACC30BP() [B]
BACB30GW()A()	A-286 CRES, C.T. SHANK, 1.0 PINTAIL, (PULL TYPE, GUN DRIVEN), CADMIUM PLATED	BACC30K()	NO EQUIVALENT	BACB30VN()K() [C]	BACC30BK()
				BACB30VT()K() [C]	BACC30BL() [A] [B]
					BACC30BP() [B]
					BACN10YZ() [A] [B] [G]
					BACC30BQ() [A]
		NAS1080E()		BACB30FM()A()	BACC30AB()C [A] [B]
					BACC30AG() [A] [E]
				BACB30VN()K() [C]	BACC30BK() [E]
				BACB30VT()K() [C]	BACC30BL() [A] [B] [E]
					BACC30BP() [B] [E]
					BACC30BQ() [A] [E]
					BACC30BS() [A] [B]
					BACN10YZ() [A] [B] [G] [E]

LOCKBOLT - PROTRUDING HEAD (SHEAR)
TABLE II

Fastener Substitution - Lockbolts
Figure 3 (Sheet 4)

BOEING PROPRIETARY - Copyright © - Unpublished Work - See title page for details.

INITIAL FASTENER OR SPECIFIED REPAIR FASTENER			FASTENER SUBSTITUTION		
PART NUMBER	DESCRIPTION	MATING PART	EQUIVALENT	ALTERNATIVE	MATING PART
BACB30GW()A()U	A286 CRES, PASSIVATED, 95 KSI SHEAR, LUBRICATED, PULLTYPE, MAX TEMP 900°F (482°C)	BACC30L()	NO EQUIVALENT	BACB30FM()A()U	BACC30AB()S [A] [B]
				BACB30MB()A()U	BACC30AB()S [A] [B]
BACB30GW()D()	ALLOY STEEL CAD PLATED LUBRICATED 95 KSI SHEAR MAX TEMP 450°F (232°C)	BACC30K() OR NAS1080C()	NO EQUIVALENT	BACB30FM()-() [H] [I]	BACC30AG() [A]
					BACC30M() [A] [B]
				BACB30FM()A()	BACC30AG() [A]
					BACC30M() [A] [B]
				BACB30MY()K() [C]	BACC30AG() [A]
					BACC30M() [A] [B]
				BACB30VN()K() [C]	BACC30BK()
				BACB30VT()K() [C]	BACC30BL() [A] [B]
					BACC30BQ() [A]
					BACN10YZ() [A] [B] [G]
					BACC30BP() [B]
BACB30GW()D()N	ALLOY STEEL, DIFFUSED NICKEL-CADMIUM PLATED, 95 KSI SHEAR, LUBRICATED, PULL TYPE, MAX TEMP 600°F (316°C)	NAS1080E	NO EQUIVALENT	[J]	

LOCKBOLT - PROTRUDING HEAD (SHEAR)
TABLE II

Fastener Substitution - Lockbolts
Figure 3 (Sheet 5)

BOEING PROPRIETARY - Copyright © - Unpublished Work - See title page for details.

INITIAL FASTENER OR SPECIFIED REPAIR FASTENER			FASTENER SUBSTITUTION		
PART NUMBER	DESCRIPTION	MATING PART	EQUIVALENT	ALTERNATIVE	MATING PART
BACB30TZ()K()	6AL-4V TITANIUM, ALUMINUM PIGMENTED COATING, 95 KSI SHEAR, CETYL ALCOHOL LUBRICATED, PULL TYPE, MAX TEMP 250°F (121°C)	BACC30BE	NO EQUIVALENT	BACB30FM()-() F H I	BACC30AG() A B
					BACC30M() A B
					BACN10XJ() A B G
				BACB30FM()A() F	BACC30AG() A
					BACC30M() A B
					BACN10XJ() A B G
				BACB30MY()K()	BACC30AG() A
					BACC30M() A
					BACN10XJ() A B G
				BACB30VN()K()	BACC30BK()
				BACB30VT()K()	BACC30BL() A B
					BACC30BP() B
					BACC30BQ() A
					BACN10YZ() A B G
BACB30UD()K()	6AL-4V TITANIUM, ALUMINUM PIGMENTED COATING, 95 KSI SHEAR, CETYL ALCOHOL LUBRICATED, STUMP TYPE, MAX TEMP 250°F (121°C)	BACC30K() OR BACC30BE()	NO EQUIVALENT	BACB30FM()-() F H I	BACC30AG() A
					BACC30M() A B
					BACN10XJ() A B G
				BACB30FM()A() F	BACC30AG() A
					BACC30M() A B
					BACN10XJ() A B G
				BACB30MY()K()	BACC30AG() A
					BACC30M() A B
					BACN10XJ() A B G
				BACB30VN()K()	BACC30BK()
				BACB30VT()K()	BACC30BP() B
					BACC30BQ() A
					BACC30BL() A B
					BACN10YZ() A B G

LOCKBOLT - PROTRUDING HEAD (SHEAR)
TABLE II

Fastener Substitution - Lockbolts
Figure 3 (Sheet 6)

BOEING PROPRIETARY - Copyright © - Unpublished Work - See title page for details.

INITIAL FASTENER OR SPECIFIED REPAIR FASTENER			FASTENER SUBSTITUTION		
PART NUMBER	DESCRIPTION	MATING PART	EQUIVALENT	ALTERNATIVE	MATING PART
BACB30VN()K()	6AL-4V TITANIUM, 95 KSI SHEAR, LIGHTWEIGHT, ALUMINUM PIGMENTED COATING, CETYL ALCOHOL LUBRICATED, MAX TEMP 250°F (121°C)	BACC30BK()	NO EQUIVALENT	BACB30FM()-() [F] [H] [I]	BACC30AG() [A]
					BACC30M() [A] [B]
					BACN10XJ() [A] [B] [G]
				BACB30FM()A() [F]	BACC30AG() [A]
					BACC30M() [A] [B]
					BACN10XJ() [A] [B] [G]
				BACB30MY()K()	BACC30AG() [A]
					BACC30M() [A] [B]
					BACN10XJ() [A] [B] [G]
				BACB30VT()K()	BACC30BL() [A] [B]
					BACC30BP() [B]
					BACC30BQ() [A]
					BACN10YZ() [A] [B] [G]

LOCKBOLT - PROTRUDING HEAD (SHEAR)
TABLE II

Fastener Substitution - Lockbolts
Figure 3 (Sheet 7)

BOEING PROPRIETARY - Copyright © - Unpublished Work - See title page for details.

INITIAL FASTENER OR SPECIFIED REPAIR FASTENER			FASTENER SUBSTITUTION		
PART NUMBER	DESCRIPTION	MATING PART	EQUIVALENT	ALTERNATIVE	MATING PART
BACB30VR()K()	6AL-4V TITANIUM, 95 KSI SHEAR, STUMP TYPE, LIGHTWEIGHT, ALUMINUM PIGMENTED COATING, CETYL ALCOHOL LUBRICATED MAX TEMP 250°F (121°C)	BACC30BK()	NO EQUIVALENT	BACB30FM()-() [F] [H] [I]	BACC30AG() [A]
					BACC30M() [A] [B]
					BACN10XJ() [A] [B] [G]
				BACB30FM()A() [F]	BACC30AG() [A]
					BACC30M() [A] [B]
					BACN10XJ() [A] [B] [G]
				BACB30MY()K()	BACC30AG() [A]
					BACC30M() [A] [B]
					BACN10XJ() [A] [B] [G]
				BACB30VN()K()	BACC30BK()
				BACB30VT()K()	BACC30BL() [A] [B]
					BACC30BP() [B]
					BACC30BQ() [A]
					BACN10YZ() [A] [B] [G]
BACB30XC()HK()	6AL-4V TITANIUM, 95 KSI SHEAR, AL COATED, CETYL ALCOHOL LUBRICATED, WITH SEALANT ESCAPE GROOVE, FOR USE IN COMPOSITES, MAX TEMP 250°F	BACC30BN()L	NO EQUIVALENT	BACB30XH()K()	BACC30CG() [D]
				BACB30NX()K()	BACC30AB()S [B]
BACB30XC()K()	6AL-4V TITANIUM, 95 KSI SHEAR, AL COATED, CETYL ALCOHOL LUBRICATED, FOR USE IN COMPOSITES, MAX TEMP 250°F	BACC30BN()L	NO EQUIVALENT	BACB30XH()K()	BACC30CG() [D]
				BACB30NX()K()	BACC30AB()S [B]

LOCKBOLT - PROTRUDING HEAD (SHEAR)
TABLE II

Fastener Substitution - Lockbolts
Figure 3 (Sheet 8)

BOEING PROPRIETARY - Copyright © - Unpublished Work - See title page for details.

INITIAL FASTENER OR SPECIFIED REPAIR FASTENER			FASTENER SUBSTITUTION		
PART NUMBER	DESCRIPTION	MATING PART	EQUIVALENT	ALTERNATIVE	MATING PART
BACB30CT()-()	ALLOY STEEL, CAD PLATED, 0.0156 OVERSIZE PULL TYPE GUN DRIVEN	NAS1080D()	NO EQUIVALENT	BACB30FQ()-()	BACC30M() [A] [B]
				BACB30FQ()A()	BACC30M() [A] [B]
				BACB30NW()K()X [C]	BACC30M() [A] [B]
BACB30GQ()-()	7075-T6 AL PULL TYPE 100° HEAD GUN DRIVEN	NAS1080D()	NO EQUIVALENT	NAS1535 THRU 1542	NAS1080K()
BACB30GS()-()	7075-T6 AL STUMP TYPE 100° HEAD HAMMER DRIVEN	NAS1080D()	NO EQUIVALENT	NAS1535 THRU 1542	NAS1080K()
BACB30GY()-()	ALLOY STEEL, 100° HEAD, STEEL C.T. SHANK, 1.0 PINTAIL, (PULL TYPE, GUN DRIVEN), CADMIUM PLATED, CETYL ALCOHOL LUBRICATED	BACC30K() OR NAS1080C()	NO EQUIVALENT	BACB30VU()K() [C] [D]	BACC30BL() [A] [B]
					BACC30BP() [B]
					BACC30BQ() [A]
					BACN10YZ() [A] [B] [G]
				BACB30XT()K() [C] [D]	BACC30BK()
		NAS1080E		BACB30VU()K() [C] [D]	BACC30BL() [A] [B] [E]
					BACC30BP() [B] [E]
					BACC30BQ() [A] [E]
					BACC30BS() [A] [B]
					BACN10YZ() [A] [B] [E] [G]
				BACB30XT()K() [C] [D]	BACC30BK() [E]

LOCKBOLT - FLUSH HEAD (SHEAR)
TABLE III

Fastener Substitution - Lockbolts
Figure 3 (Sheet 9)

BOEING PROPRIETARY - Copyright © - Unpublished Work - See title page for details.

INITIAL FASTENER OR SPECIFIED REPAIR FASTENER			FASTENER SUBSTITUTION		
PART NUMBER	DESCRIPTION	MATING PART	EQUIVALENT	ALTERNATIVE	MATING PART
BACB30GY()A()	A-286 CRES, 100° HEAD, STEEL C.T. SHANK, 1.0 PINTAIL, (PULL TYPE, GUN DRIVEN), CADMIUM PLATED, CETYL ALCOHOL LUBRICATED	BACC30K() OR NAS1080C()	NO EQUIVALENT	BACB30VU()K() [C] [D]	BACC30BL() [A] [B]
					BACC30BP() [B]
					BACC30BQ() [A]
					BACN10YZ() [A] [B] [G]
				BACB30XT()K() [C] [D]	BACC30BK()
		NAS1080E		BACB30VU()K() [C] [D]	BACC30BL() [A] [B] [E]
					BACC30BP() [B] [E]
					BACC30BQ() [A] [E]
					BACC30BS() [A] [B]
					BACN10YZ() [A] [B] [E] [G]
				BACB30XT()K() [C] [D]	BACC30BK() [E]
BACB30GY()A()U	A286 CRES, PASSIVATED, 95 KSI SHEAR, CETYL ALCOHOL LUBRICATED, 100° HEAD, PULL TYPE, MAX TEMP 900°F (482°C)	BACC30L()	NO EQUIVALENT	BACB30FN()A()U	BACC30AB()S [A] [B]
BACB30GY()D()N	ALLOY STEEL, NICKEL-CADMIUM PLATED, 95 KSI SHEAR, LUBRICATED, PULL TYPE, MAX TEMP 600°F (316°C)	NAS1080E	NO EQUIVALENT	[J]	

LOCKBOLT - FLUSH HEAD (SHEAR)
TABLE III

Fastener Substitution - Lockbolts
Figure 3 (Sheet 10)

BOEING PROPRIETARY - Copyright © - Unpublished Work - See title page for details.

INITIAL FASTENER OR SPECIFIED REPAIR FASTENER			FASTENER SUBSTITUTION		
PART NUMBER	DESCRIPTION	MATING PART	EQUIVALENT	ALTERNATIVE	MATING PART
BACB30TY()K()	6AL-4V TITANIUM, ALUMINUM PIGMENTED COATING, 95 KSI SHEAR, CETYL ALCOHOL LUBRICATED, 100° HEAD, PULL TYPE, MAX TEMP 250°F (121°C)	BACC30BE()	NO EQUIVALENT	BACB30NW()K()	BACC30AG()
					BACC30M() [A] [B]
					BACN10XJ() [A] [B] [G]
				BACB30VU()K()	BACC30BL() [A] [B]
					BACC30BP() [B]
					BACC30BQ() [A]
					BACN10YZ() [A] [B] [G]
				BACB30XT()K()	BACC30BK()
BACB30UC()K()	6AL-4V TITANIUM, 100° REDUCED HEAD, STUMP TYPE, 95 KSI SHEAR, ALUMINUM PIGMENTED COATING, CETYL ALCOHOL LUBRICATED	NAS1080K()	NO EQUIVALENT	BACB30NW()K()	BACC30M() [A] [B]
				BACB30VU()K()	BACC30BP() [B]
					BACC30BL() [A] [B]
					BACC30BQ() [A]
					BACB10YZ() [A] [B] [G]
BACB30UC()K()A	6AL-4V TITANIUM, 100° REDUCED HEAD, STUMP TYPE, CHAMFERED STUMP END, 95 KSI SHEAR, ALUMINUM PIGMENTED COATING, CETYL ALCOHOL LUBRICATED	BACC30BE()	NO EQUIVALENT	BACB30NW()K()	BACC30M() [A] [B]
				BACB30VU()K()	BACC30BL() [A] [B]
					BACC30BP() [B]
					BACC30BQ() [A]
					BACN10YZ() [A] [B] [G]

LOCKBOLT - FLUSH HEAD (SHEAR)
TABLE III

Fastener Substitution - Lockbolts
Figure 3 (Sheet 11)

BOEING PROPRIETARY - Copyright © - Unpublished Work - See title page for details.

INITIAL FASTENER OR SPECIFIED REPAIR FASTENER			FASTENER SUBSTITUTION		
PART NUMBER	DESCRIPTION	MATING PART	EQUIVALENT	ALTERNATIVE	MATING PART
BACB30VM()K()	6AL-4V TITANIUM, 100° HEAD, LIGHTWEIGHT, 95 KSI SHEAR, ALUMINUM PIGMENTED COATING, CETYL ALCOHOL LUBRICATED, MAX TEMP 250°F (121°C)	BACC30BK()	NO EQUIVALENT	BACB30NW()K()	BACC30M() [A] [B]
				BACB30VM()K()	BACC30BK()
				BACB30VU()K()	BACC30BL() [A] [B]
					BACC30BP() [B]
					BACC30BQ() [A]
					BACN10YZ() [A] [B] [G]
				BACB30XT()K()	BACC30BK()
BACB30VP()K()	6AL-4V TITANIUM, 100° HEAD, STUMP TYPE, LIGHTWEIGHT, 95 KSI SHEAR, ALUMINUM PIGMENTED COATING, CETYL ALCOHOL LUBRICATED, MAX TEMP 250°F (121°C)	BACC30BK()	NO EQUIVALENT	BACB30NW()K()	BACC30M() [A] [B]
				BACB30VM()K()	BACC30BK()
				BACB30VU()K()	BACC30BL() [A] [B]
					BACC30BP() [B]
					BACC30BQ() [A]
					BACN10YZ() [A] [B] [G]
				BACB30XT()K()	BACC30BK()
BACB30WB()HK()	6AL-4V TITANIUM, 130° HEAD, LIGHTWEIGHT, 95 KSI SHEAR, ALUMINUM PIGMENTED COATING, CETYL ALCOHOL LUBRICATED, MAX TEMP 250°F (121°C), WITH SEALANT ESCAPE GROOVE, FOR USE IN COMPOSITES	BACC30BN()L	NO EQUIVALENT	NO ALTERNATIVE	

LOCKBOLT - FLUSH HEAD (SHEAR)
TABLE III

Fastener Substitution - Lockbolts
Figure 3 (Sheet 12)

BOEING PROPRIETARY - Copyright © - Unpublished Work - See title page for details.

INITIAL FASTENER OR SPECIFIED REPAIR FASTENER			FASTENER SUBSTITUTION		
PART NUMBER	DESCRIPTION	MATING PART	EQUIVALENT	ALTERNATIVE	MATING PART
BACB30WB()K()	6AL-4V TITANIUM, 130° HEAD, LIGHTWEIGHT, 95 KSI SHEAR, ALUMINUM PIGMENTED COATING, CETYL ALCOHOL LUBRICATED, MAX TEMP 250°F (121°C), FOR USE IN COMPOSITES	BACC30BN()L	NO EQUIVALENT	BACB30XR()K()	BACC30CG() D
BACB30WD()HK()	6AL-4V TITANIUM, 100° (MS24694) HEAD, LIGHTWEIGHT, 95 KSI SHEAR, ALUMINUM PIGMENTED COATING, CETYL ALCOHOL LUBRICATED, MAX TEMP 250°F (121°C), WITH SEALANT ESCAPE GROOVE, FOR USE IN COMPOSITES	BACC30BN()L	NO EQUIVALENT	BACB30NY()K()	BACC30AB()S B
BACB30WD()K()	6AL-4V TITANIUM, 100° (MS24694) HEAD, LIGHTWEIGHT, 95 KSI SHEAR, AL COATED, CETYL ALCOHOL LUBRICATED, MAX TEMP 250°F, FOR USE IN COMPOSITES	BACC30BN()L	NO EQUIVALENT	BACB30XF()K()	BACC30CG() D
				BACB30NY()K()	BACC30AB()S B

LOCKBOLT - FLUSH HEAD (SHEAR)
TABLE III

Fastener Substitution - Lockbolts
Figure 3 (Sheet 13)

BOEING PROPRIETARY - Copyright © - Unpublished Work - See title page for details.

INITIAL FASTENER OR SPECIFIED REPAIR FASTENER			FASTENER SUBSTITUTION		
PART NUMBER	DESCRIPTION	MATING PART	EQUIVALENT	ALTERNATIVE	MATING PART
BACB30WE()HK()	6AL-4V TITANIUM, 100° (MS24694) HEAD, LIGHTWEIGHT, 95 KSI SHEAR, STUMP TYPE, ALUMINUM PIGMENTED COATING, CETYL ALCOHOL LUBRICATED, MAX TEMP 250°F (121°C), WITH SEALANT ESCAPE GROOVE, FOR USE IN COMPOSITES	BACC30BN()L	NO EQUIVALENT	BACB30WD()HK()	BACC30BN()L
BACB30XB()HK()	6AL-4V TITANIUM, 100° HEAD, LIGHTWEIGHT, 95 KSI SHEAR, ALUMINUM PIGMENTED COATING, CETYL ALCOHOL LUBRICATED, MAX TEMP 250°F (121°C), WITH SEALANT ESCAPE GROOVE, FOR USE IN COMPOSITES	BACC30BN()L	NO EQUIVALENT	BACB30NZ()K()	BACC30AB()S B

LOCKBOLT - FLUSH HEAD (SHEAR)
TABLE III

Fastener Substitution - Lockbolts
Figure 3 (Sheet 14)

BOEING PROPRIETARY - Copyright © - Unpublished Work - See title page for details.

INITIAL FASTENER OR SPECIFIED REPAIR FASTENER			FASTENER SUBSTITUTION		
PART NUMBER	DESCRIPTION	MATING PART	EQUIVALENT	ALTERNATIVE	MATING PART
BACB30XB()K()	6AL-4V TITANIUM, 100° HEAD, LIGHTWEIGHT, 95 KSI SHEAR, AL COATED, CETYL ALCOHOL LUBRICATED, MAX TEMP 250°F (121°C), FOR USE IN COMPOSITES	BACC30BN()	NO EQUIVALENT	BACB30XG()K()	BACC30CG() D
				BACB30NZ()K()	BACC30AB()S B
BACB30XT()K()	6AL-4V TITANIUM, 100° HEAD, LIGHTWEIGHT, 95 KSI SHEAR, ALUMINUM PIGMENTED COATING, CETYL ALCOHOL LUBRICATED, MAX TEMP 250° (121°C)	BACC30BK()	NO EQUIVALENT	BACB30YP()K()	BACC30BL() A B
					BACC30BP() B
					BACC30BQ A
					BACN10YZ() A B G
BACB30YC()HK()	6AL-4V TITANIUM, 100° HEAD, LIGHTWEIGHT, STUMP TYPE, 95 KSI SHEAR, ALUMINUM PIGMENTED COATING, CETYL ALCOHOL LUBRICATED, MAX TEMP 250°F (121°C), WITH SEALANT ESCAPE GROOVE, FOR USE IN COMPOSITES	BACC30BN()L	NO EQUIVALENT	BACB30XB()HK()	BACC30BN()L

LOCKBOLT - FLUSH HEAD (SHEAR)
TABLE III

Fastener Substitution - Lockbolts
Figure 3 (Sheet 15)

BOEING PROPRIETARY - Copyright © - Unpublished Work - See title page for details.

INITIAL FASTENER OR SPECIFIED REPAIR FASTENER			FASTENER SUBSTITUTION		
PART NUMBER	DESCRIPTION	MATING PART	EQUIVALENT	ALTERNATIVE	MATING PART
BACB30DX()-()	8740 ALLOY STEEL, C.T. SHANK, 1.0 PINTAIL, (PULL TYPE, GUN DRIVEN), CADMIUM PLATED	NAS1080-() OR NAS1080P()	NO EQUIVALENT	BACB30NX()K() [C]	BACC30X() [A] [B]
				BACB30UB()K() [C]	BACC30BF()
		NAS1080R()		BACB30NX()K() [C]	BACC30X() [A] [B]
				BACB30UB()K() [C] [E]	BACC30BF()
BACB30DX()A()	A-286 CRES C.T. SHANK, 1.0 PINTAIL, (PULL TYPE, GUN DRIVEN), CADMIUM PLATED	NAS1080-() OR NAS1080P()	NO EQUIVALENT	BACB30NX()K() [C]	BACC30X() [A] [B]
				BACB30UB()K() [C]	BACC30BF()
		NAS1080R()		BACB30NX()K() [C]	BACC30X() [A] [B]
				BACB30UB()K() [C] [E]	BACC30BF()
BACB30DX()A()U	A-286 CRES C.T. SHANK, 1.0 PINTAIL, (PULL TYPE, GUN DRIVEN), PASSIVATED	BACC30Q()	NO EQUIVALENT	BACC30MB()A()U	BACC30X()S [A] [B]
BACB30DX()D()N	ALLOY STEEL, NICKEL-CADMIUM PLATED, 160 KSI TENSION, LUBRICATED, PULL TYPE, MAX TEMP 900°F (482°C)		NO EQUIVALENT	[J]	
BACB30GP()-()	7075-T6 AL, ANODIZED, 77 KSI TENSION, LUBRICATED, PULL TYPE, MAX TEMP 250°F (121°C)	NAS1080D	NO EQUIVALENT	NAS1515 THRU NAS1532	NAS1080D
BACB30GR()-()	7075-T6 AL, CLOSE TOLERANCE SHANK, STUMP TYPE, MAX TEMP 250°F (121°C)	NAS1080D	NO EQUIVALENT	BACB30GP()-()	NAS1080D
				NAS1525 THRU NAS1532	NAS1080D

LOCKBOLT - PROTRUDING HEAD (TENSION)
TABLE IV

Fastener Substitution - Lockbolts
Figure 3 (Sheet 16)

BOEING PROPRIETARY - Copyright © - Unpublished Work - See title page for details.

INITIAL FASTENER OR SPECIFIED REPAIR FASTENER			FASTENER SUBSTITUTION		
PART NUMBER	DESCRIPTION	MATING PART	EQUIVALENT	ALTERNATIVE	MATING PART
BACB30HC()-()	8740 ALLOY STEEL, CLOSE TOLERANCE SHANK, (STUMP TYPE, HAMMER DRIVEN), CADMIUM PLATED	NAS1080	NO EQUIVALENT	BACB30NX()K() [C]	BACC30X() [A] [B]
				BACB30UB()K() [C]	BACC30BF()
		NAS1080R		BACB30NX()K() [C]	BACC30X() [A] [B]
				BACB30UB()K() [C] [E]	BACC30BF()
BACB30HC()A()	A286 CRES, CADMIUM PLATED, 160 KSI TENSION, LUBRICATED, CLOSE TOLERANCE SHANK, (STUMP TYPE, HAMMER DRIVEN), MAX TEMP 250°F (121°C)	NAS1080	NO EQUIVALENT	BACB30MB()A()	BACC30X() [A] [B]
				BACB30NX()K() [C]	BACC30X() [A] [B]
				BACB30UB()K() [C]	BACC30BF()
		NAS1080R		BACB30MB()A()	BACC30X() [A] [B]
				BACB30NX()K() [C]	BACC30X() [A] [B]
				BACB30UB()K() [C] [E]	BACC30BF()
BACB30HC()A()U	A286 CRES, CADMIUM PASSIVATED, 160 KSI TENSION, LUBRICATED, CLOSE TOLERANCE SHANK, (STUMP TYPE, HAMMER DRIVEN), MAX TEMP 900°F (482°C)	BACC30Q()	NO EQUIVALENT	BACB30MB()A()U	BACC30X()P [A] [B]

LOCKBOLT - PROTRUDING HEAD (TENSION)
TABLE IV

Fastener Substitution - Lockbolts
Figure 3 (Sheet 17)

BOEING PROPRIETARY - Copyright © - Unpublished Work - See title page for details.

INITIAL FASTENER OR SPECIFIED REPAIR FASTENER			FASTENER SUBSTITUTION		
PART NUMBER	DESCRIPTION	MATING PART	EQUIVALENT	ALTERNATIVE	MATING PART
BACB30HC()D()N	ALLOY STEEL, NICKEL-CADIMUM PLATED, 160 KSI TENSION, LUBRICATED, CLOSE TOLERANCE SHANK, (STUMP TYPE, HAMMER DRIVEN), MAX TEMP 600°F (316°C)		NO EQUIVALENT	[J]	
BACB30UB()K()	6AL-4V TITANIUM, 160 KSI TENSION, 95 KSI SHEAR, ALUMINUM PIGMENTED COATING, CETYL ALCOHOL LUBRICATED, MAX TEMP 250°F (121°C)	BACC30BF()	NO EQUIVALENT	BACB30NX()K()	BACC30BH() [A] [B] BACC30X() [A] [B] BACN10YT()CD [A] [B] [G]
BACB30YD()HK()	6AL-4V TITANIUM, 95 KSI SHEAR, STUMP TYPE, LIGHTWEIGHT, ALUMINUM PIGMENTED COATING, CETYL ALCOHOL LUBRICATED, MAX TEMP 250°F (121°C), WITH SEALANT ESCAPE GROOVE, FOR USE IN COMPOSITES	BACC30BN()L	NO EQUIVALENT	BACB30XC()HK()	BACC30BN()L

LOCKBOLT - PROTRUDING HEAD (TENSION)
TABLE IV

Fastener Substitution - Lockbolts
Figure 3 (Sheet 18)

BOEING PROPRIETARY - Copyright © - Unpublished Work - See title page for details.

INITIAL FASTENER OR SPECIFIED REPAIR FASTENER			FASTENER SUBSTITUTION		
PART NUMBER	DESCRIPTION	MATING PART	EQUIVALENT	ALTERNATIVE	MATING PART
BACB30DY()-()	ALLOY STEEL, CADMIUM PLATED, 160 KSI TENSION, LUBRICATED, 100° (MS20426) HEAD, PULL TYPE, MAX TEMP 250°F (121°C)	NAS1080	NO EQUIVALENT	BACB30DY()A()	NAS1080
		NAS1080P		BACB30DY()A()	NAS1080P
		NAS1080R		BACB30DY()A()	NAS1080R
BACB30DY()A()	A286 CRES, CADMIUM PLATED, 160 KSI TENSION, LUBRICATED, 100° (MS20426) HEAD, PULL TYPE, MAX TEMP 250°F (121°C)		NO EQUIVALENT	NO ALTERNATIVE	
BACB30GQ()-()	7075-T6 AL, ANODIZED, 77 KSI TENSION, LUBRICATED, 100° (MS20426) HEAD, PULL TYPE, MAX TEMP 250°F (121°C)	NAS1080D	NO EQUIVALENT	NAS1535 THRU NAS1542	NAS1080D
BACB30GS()-()	7075-T6 AL, CLOSE TOLERANCE SHANK, STUMP TYPE, MAX TEMP 250°F (121°C)	NAS1080D	NO EQUIVALENT	BACB30GQ()-()	NAS1080D
				NAS1535 THRU NAS1542	NAS1080D

LOCKBOLT - FLUSH HEAD (TENSION)
TABLE V

Fastener Substitution - Lockbolts
Figure 3 (Sheet 19)

BOEING PROPRIETARY - Copyright © - Unpublished Work - See title page for details.

INITIAL FASTENER OR SPECIFIED REPAIR FASTENER			FASTENER SUBSTITUTION		
PART NUMBER	DESCRIPTION	MATING PART	EQUIVALENT	ALTERNATIVE	MATING PART
BACB30GX()-()	ALLOY STEEL, CADMIUM PLATED, 160 KSI TENSION, LUBRICATED, 100° (AN509) HEAD, PULL TYPE, MAX TEMP 250°F (121°C)	NAS1080 OR NAS1080P OR NAS1080R	NO EQUIVALENT	BACB30JC()-() [H]	BACC30BH() [A] [B] BACC30X() [A] [B] BACN10YT()CD [A] [B] [G]
				BACB30JC()A()	BACC30BH() [A] [B] BACC30X() [A] [B] BACN10YT()CD [A] [B] [G]
BACB30GX()-()X	ALLOY STEEL, CAD PLATED, UNLUBRICATED 95 KSI SHEAR MAX TEMP 450°F (232°C)	NAS1080 OR NAS1080P OR NAS1080R	NO EQUIVALENT	[J]	
BACB30GX()D()N	ALLOY STEEL, DIFFUSED NICKEL-CADIUM PLATED, 160 KSI TENSION, LUBRICATED, 100° (AN509) HEAD, PULL TYPE, MAX TEMP 600°F (316°C)		NO EQUIVALENT	[J]	
BACB30HD()-()	ALLOY STEEL, CADMIUM PLATED, 160 KSI TENSION, LUBRICATED, 100° (MS20426) HEAD, STUMP TYPE, MAX TEMP 250°F (121°C)	NAS1080	NO EQUIVALENT	BACB30DY()-()	NAS1080
				BACB30DY()A()	NAS1080
		NAS1080R		BACB30DY()-()	NAS1080R
				BACB30DY()A()	NAS1080R
BACB30HD()A()	A286 CRES, CADMIUM PLATED, 160 KSI TENSION, LUBRICATED, 100° (AN509) HEAD, STUMP TYPE, MAX TEMP 250°F (121°C)	NAS1080	NO EQUIVALENT	BACB30DY()A()	NAS1080
		NAS1080R		BACB30DY()A()	NAS1080R
		BACC30Q()		BACB30DY()A()	BACC30Q()

LOCKBOLT - FLUSH HEAD (TENSION)
TABLE V

Fastener Substitution - Lockbolts
Figure 3 (Sheet 20)

BOEING PROPRIETARY - Copyright © - Unpublished Work - See title page for details.

INITIAL FASTENER OR SPECIFIED REPAIR FASTENER			FASTENER SUBSTITUTION		
PART NUMBER	DESCRIPTION	MATING PART	EQUIVALENT	ALTERNATIVE	MATING PART
BACB30HG()-()	ALLOY STEEL, CADMIUM PLATED, 160 KSI TENSION, LUBRICATED, 100° (AN509) HEAD, STUMP TYPE, MAX TEMP 250°F (121°C)	NAS1080	NO EQUIVALENT	BACB30JC()-() [H]	BACC30X() [A] [B]
				BACB30NY()K() [C]	BACC30X() [A] [B]
				BACB30UA()K() [C]	BACC30BF()
		NAS1080R		BACB30JC()-() [H]	BACC30X() [A] [B]
				BACB30NY()K() [C]	BACC30X() [A] [B]
BACB30UA()K()	6AL-4V TITANIUM, 100° HEAD, 160 KSI TENSION, ALUMINUM PIGMENTED COATING, CETYL ALCOHOL LUBRICATED	BACC30BF()	NO EQUIVALENT	BACB30NY()K()	BACC30BH() [A] [B]
					BACC30X() [A] [B]
					BACN10YT()CD [A] [B] [G]

LOCKBOLT - FLUSH HEAD (TENSION)
TABLE V

Fastener Substitution - Lockbolts
Figure 3 (Sheet 21)

BOEING PROPRIETARY - Copyright © - Unpublished Work - See title page for details.

TORQUE VALUES

1. Applicability

   A. The torque values given in this section can be used for fasteners in structural repairs, (unless a Service Bulletin or Engineer Drawing shows a different torque value for the same fasteners in the same structure).

   B. Refer to the Airplane Maintenance Manual for torque values on other fasteners.

2. General

   A. The torque values for external wrenching bolts in metallic materials are given in Fig. 1.

   B. The torque values for hex-drive bolts in metallic materials are given in Fig. 2.

   C. The torque values for radius lead-in bolts in metallic materials are given in Fig. 3.

   D. The torque values for fasteners in composite materials are given in Fig. 4.

   E. Refer to SRM 51-30-2 for procedures on how to install bolts, washers, nuts, and locknuts.

3. References

   A. SRM 51-30-2 Fastener Installation and Removal

4. Torque Wrench Adapters and Extensions

   A. Torque wrench adapters and/or extensions are used when it is difficult to apply the torque wrench directly.

   B. When you use adapters and/or extensions, a corrected torque wrench reading is necessary. Follow the examples in Fig. 5 to find the corrected torque wrench reading.

   C. Only use adapters on rigid frame torque wrenches.

   D. Apply force to the torque wrench handle or handle extension, perpendicular to the handle and in its plane of rotation.

BOEING PROPRIETARY - Copyright © - Unpublished Work - See title page for details.

NUT PART NUMBER AND STYLE	BACN10JC (THREAD SIZES 1/2 THRU 1-1/2), BACN10JD, BACN11N AND MS14145 (CASTELLATED-THIN STYLE, ALL SIZES) MS21245 (HEX, SELF-LOCKING, THIN)	BACN10YJ (NYLON NUT)
BOLT HEAD STYLE	ALL	ALL
BOLT PART NUMBER	ALL	METAL BOLTS ONLY
THREAD SIZE AND BASIC MAJOR DIAMETER	TORQUE RANGE IN-LBS [A]	TORQUE RANGE IN-LBS [A]
	DRY OR LUBRICATED BOLT	DRY OR LUBRICATED BOLT
0.0860 2-56 OR 2-64	2.5 TO 4.5	--
0.1120 4-40 OR 4-48	6 TO 8	--
0.1380 6-32 OR 6-40	12 TO 15	--
0.1640 8-32 OR 8-36	15 TO 17	5 TO 6
0.1900 10-32	18 TO 25	6 TO 8
0.2500 1/4-28	30 TO 50	--
0.3125 5/16-24	60 TO 95	--
0.3750 3/8-24	95 TO 160	--
0.4375 7/16-20	220 TO 280	--
0.5000 1/2-20	290 TO 510	--
0.5625 9/16-18	480 TO 850	--
0.6250 5/8-18	660 TO 980	--
0.7500 3/4-16	1300 TO 2000	--
0.8750 7/8-14	1500 TO 3300	--
1.0000 1-12 OR 1-14	2200 TO 5300	--
1.1250 1-1/8-12	3000 TO 6200	--
1.2500 1-1/4-12	5400 TO 8600	--
1.3750 1-3/8-12	7000 TO 9000	--
1.5000 1-1/2-12	10,000 TO 12,000	--

NUT INSTALLATION TORQUE RANGE [E]
TABLE I [D]

NOTES

- THE SOURCE OF INFORMATION FOR THIS FIGURE CAN BE FOUND IN BOEING PROCESS SPECIFICATION BAC5009.

[A] WHEN ANY BOLT IS TO BE INSTALLED BY WRENCHING THE HEAD, SUCH AS WHEN INSTALLING BOLT INTO PLATENUTS, CLIP-NUTS, BARREL-NUTS, INSERTS OR TAPPED HOLES, THE INSTALLATION TORQUE SHALL BE THE MAXIMUM OF THE SPECIFIED RANGE.

[B] WHEN AN UNLUBRICATED BOLT IS USED, USE THE DRY BOLT COLUMN FOR TORQUE VALUES. (THIS INCLUDES IF WET SEALANT IS ON THE BOLT THREADS).

[C] LUBRICATED BOLTS INCLUDE DRYFILM LUBRICATED (MIL-L-8937) BOLTS AND BOLTS WITH ANTI-FRICTION COMPOUNDS SUCH AS EASE-OFF 990, MIL-C-11796 AND MIL-G-23827 APPLIED TO THE THREADS.

[D] SEE TABLE II FOR REDUCED SHEAR HEAD BOLTS.

[E] WHEN THE BOLT PART NUMBER AND THE NUT PART NUMBER SPECIFIED IN THE DRAWING OR REPAIR ARE IN DIFFERENT COLUMNS, USE THE INSTALLATION TORQUE FROM THE COLUMN WITH THE LESSER TORQUE VALUE.

[F] INSTALLATION TORQUE FOR 3/4-16 BACB30MR, BACB30XL, BACB30NM, BACB30XJ, BACB30MS, BACB30NN, BACB30XK, AND BACB30XM IS 1000 TO 2200IN-LB FOR DRY BOLTS AND 1000 TO 2150 IN-LB FOR LUBED BOLTS. THE INSTALLATION TORQUE FOR ALL OTHER 3/4-16 BOLTS LISTED IN THE COLUMN IS 2400 TO 3500 IN-LB FOR DRY BOLTS AND 1700 TO 2150 IN-LB FOR LUBED BOLTS.

Torque Values for External Wrenching Bolts in Metallic Materials
Figure 1 (Sheet 1)

BOEING PROPRIETARY - Copyright © - Unpublished Work - See title page for details.

NUT PART NUMBER AND STYLE	BACN10HR (12 POINT) BACN10JG (12 POINT) BACN10HC (BARREL NUT) BACN10YN (12 POINT, VESPEL)	NAS1804 (12 POINT), NAS1805 (12 POINT), BACN10B (12 POINT), BACN10GW (12 POINT), BACN10JA (PLATE NUT), BACN10JB (PLATE NUT), BACN10RM (PLATE NUT), NAS577 (BARREL NUT), BACN10JD (CASTELLATED-THICK STYLE)			
BOLT HEAD STYLE	12 POINT	12 POINT	HEX	PAN	100 DEG
BOLT PART NUMBER	BACB30NH BACB30US BACB30MT BACB30TR -- -- -- -- -- -- -- -- --	BACB30FD BACB30LE BACB30MR BACB30XL BACB30PN MS21250 -- -- -- -- -- -- --	BACB30NM BACB30XJ BACB30NE BACB30LM NAS6603 THRU NAS6620 NAS6703 THRU NAS6720 NAS6803 THRU NAS6820	BACB20LN BACB30NS BACB30EM NAS1216 -- -- -- -- -- -- -- -- --	BACB30LP BACB30EM BACB30LU BACB30LR BACB30MS BACB30NN BACB30XK BACB30XM BACB30SW BACB30XA -- -- --

THREAD SIZE AND BASIC MAJOR DIAMETER	TORQUE RANGE IN-LBS [A]		TORQUE RANGE IN-LBS [A]	
	DRY BOLT [B]	LUBED BOLT [C]	DRY BOLT [B]	LUBED BOLT [C]
0.0860 2-56 OR 2-64	--	--	--	--
0.1120 4-40 OR 4-48	--	--	--	--
0.1380 6-32 OR 6-40	--	--	--	--
0.1640 8-32 OR 8-36	--	--	--	--
0.1900 10-32	70 TO 100	50 TO 60	30 TO 35	20 TO 25
0.2500 1/4-28	90 TO 125	70 TO 80	60 TO 100	50 TO 75
0.3125 5/16-24	180 TO 250	145 TO 180	130 TO 200	90 TO 125
0.3750 3/8-24	300 TO 500	275 TO 330	220 TO 410	150 TO 250
0.4375 7/16-20	510 TO 840	370 TO 440	370 TO 690	260 TO 425
0.5000 1/2-20	870 TO 1300	500 TO 650	630 TO 1070	440 TO 650
0.5625 9/16-18	1300 TO 1800	800 TO 1000	1000 TO 1470	700 TO 920
0.6250 5/8-18	1900 TO 2300	1350 TO 1650	1400 TO 1900	1000 TO 1200
0.7500 3/4-16	3300 TO 4300	2800 TO 3300	[F]	[F]
0.8750 7/8-14	5100 TO 6700	3900 TO 4500	3700 TO 5500	2600 TO 3400
1.0000 1-12 OR 1-14	7000 TO 10900	6200 TO 7000	5100 TO 8900	3600 TO 5500
1.1250 1-1/8-12	9500 TO 13000	8300 TO 9400	6900 TO 10700	4900 TO 6700
1.2500 1-1/4-12	15800 TO 19200	11000 TO 12000	11500 TO 15700	7500 TO 9700
1.3750 1-3/8-12	20000 TO 24000	16000 TO 17000	--	--
1.5000 1-1/2-12	--	--	--	--

NUT INSTALLATION TORQUE RANGE [E]
TABLE I [D] (CONT)

Torque Values for External Wrenching Bolts in Metallic Materials
Figure 1 (Sheet 2)

BOEING PROPRIETARY - Copyright © - Unpublished Work - See title page for details.

NUT PART NUMBER AND STYLE	ALL PLATE-NUTS EXCEPT BACN10JA, BACN10JB, AND BACN10RM; ALL CLIP-NUTS, INSERTS, AND TAPPED HOLES; BACN10YR, NAS679, MS21042, MS21043 (HEX SELF LOCKING), BACN10JC (THREAD SIZES NO. 4 THRU 7/16 ONLY), BACN10JD (CASTELLATED - THICK STYLE SIZES 3/16 THRU 3/8 INCH), BACN11N AND MS14144 (CASTELLATED - THICK STYLE)				
BOLT HEAD STYLE	12 PT	HEX	PAN	100 DEG	SOCKET
BOLT PART NUMBER	BACB30LT, BACB30NL, BACB30UU, BACB30NJ	BACB30LJ, BACB30NR, BACB30NF, BACS12BG, BACB30PU, BACB30PW, BACB30XN, NAS563, NAS572, NAS1801, NAS1802, NAS6203 THRU NAS6220, NAS428, BACS12CB, BACS12GU	BACB30LK, BACB30NT, BACB30BE, BACS12BG, NAS1217, NAS1218, NAS600 THRU NAS623, BACS12CK, NAS8200 THRU NAS8206, BACS12FA	BACB30PC, BACB30LH, BACB30RF, BACB30SW, BACB30WP, BACS12BP, BACS12ER, BACS12GM, BACS12GR, NAS514, NAS517, BACS12GP, BACB30TP, BACS12BF, BACS12GX	MS21262 MS24678 NAS1351 NAS1352

THREAD SIZE AND BASIC MAJOR DIA.	TORQUE RANGE IN-LBS [A]	
	DRY BOLT [B]	LUBED BOLT [C]
0.0860 2-56 OR 2-64	3.4 TO 4.5	3.4 TO 4.5
0.1120 4-40 OR 4-48	6 TO 8	6 TO 8
0.1380 6-32 OR 6-40	12 TO 15	12 TO 15
0.1640 8-32 OR 8-36	15 TO 20	15 TO 17
0.1900 10-32	25 TO 35	20 TO 25
0.2500 1/4-28	50 TO 80	50 TO 75
0.3125 5/16-24	100 TO 150	90 TO 125
0.3750 3/8-24	160 TO 240	150 TO 200
0.4375 7/16-20	250 TO 350	240 TO 300
0.5000 1/2-20	480 TO 790	440 TO 650
0.5625 9/16-18	800 TO 1150	700 TO 920
0.6250 5/8-18	1100 TO 1500	1000 TO 1200
0.7500 3/4-16	2300 TO 3000	1700 TO 2150
0.8750 7/8-14	2500 TO 4500	2600 TO 3400
1.0000 1-12 OR 1-14	3700 TO 7500	3600 TO 5500
1.1250 1-1/8-12	5000 TO 9000	4900 TO 6700
1.2500 1-1/4-12	9000 TO 13000	7500 TO 9700
1.3750 1-3/8-12	—	—
1.5000 1-1/2-12	—	—

NUT INSTALLATION TORQUE RANGE [E]
TABLE I [D] (CONT)

Torque Values for External Wrenching Bolts in Metallic Materials
Figure 1 (Sheet 3)

BOEING PROPRIETARY - Copyright © - Unpublished Work - See title page for details.

NUT PART NUMBER AND STYLE		ALL
BOLT STYLE		100 DEGREE REDUCED SHEAR HEAD
PART NUMBER-BOLT		BACB30EL BACB30DP BACB30FB BACB30LL BACB30NU BACB30RF BACB30UW BACB30VF BACB30UR NAS1581 NAS1992 THRU NAS2000 NAS8703 THRU NAS8716 BACB30XD
THREAD SIZE AND BASIC MAJOR DIA.		TORQUE-RANGE IN-LBS [A] DRY BOLT [B]
0.0860	2-56 OR 2-64	--
0.1120	4-40 OR 4-48	--
0.1380	6-32 OR 6-40	--
0.1640	8-32 OR 8-36	10 TO 18
0.1900	10-32	18 TO 25
0.2500	1/4-28	30 TO 40
0.3125	5/16-24	90 TO 100
0.3750	3/8-24	95 TO 105
0.4375	7/16-20	150 TO 170
0.5000	1/2-20	220 TO 245
0.5625	9/16-18	290 TO 325
0.6250	5/8-18	395 TO 435
0.7500	3/4-16	645 TO 720
0.8750	7/8-14	1040 TO 1150
1.0000	1-12 OR 1-14	1560 TO 1730
1.1250	1-1/8-12	--
1.2500	1-1/4-12	--
1.3750	1-3/8-12	--
1.5000	1-1/2-12	--

REDUCED SHEAR HEAD BOLTS
TABLE II

Torque Values for External Wrenching Bolts in Metallic Materials
Figure 1 (Sheet 4)

BOEING PROPRIETARY - Copyright © - Unpublished Work - See title page for details.

FASTENER DIAMETER AND THREAD SIZE (INCH)	TORQUE RANGE (POUND-INCH)					
	SHEAR-TYPE HEX DRIVE BOLTS:					TENSION-TYPE HEX DRIVE BOLTS:
	BOLT	BACB30YP BACB30VT BACB30VU		BACB30FM BACB30FN BACB30MY BACB30NW BACB30ND BACB30NZ BACB30YL BACB30YN HL360 HL834 HL420 HL421			BACB30JC BACB30MB BACB30NX BACB30NY BACB30YK BACB30YM HLT422 HLT423
	NUT	BACN10YZ BACN10ZV	MS21043 BACN10JC MS21042 NAS1291 NAS679 BACN10YR	MS21043 BACN10JC BACN10XJ MS21042 NAS1291 KFN305 KFN600 H600 NAS679 KFN511 BACN10YR BACN10YT BACN10TN BACN11E	BACN10WM	KFN609 BACN10ZZ	NAS1804 NAS1805 BACN10GW KFN305 BACN10MT KFN511 MS21042 BACN10YT BACN11E
	TORQUE INCH-POUNDS						
5/32-32	15-25		15-25			15-25	25-35
3/16-32	25-35		25-35			23-28	30-40
1/4-28	60-80		60-80		60-80	60-75	80-95
5/16-24	110-140		130-160		125-145	120-150	150-200
3/8-24	160-200		200-240		200-210	180-210	260-360
7/16-20			270-330			270-330	390-480
1/2-20			370-430			370-430	640-800
9/16-18			500-575				740-900
5/8-18			625-700				800-1000
3/4-16			900-1000				1300-1650

TORQUE VALUES FOR LOCKNUTS ON HEX DRIVE BOLTS
TABLE I

Torque Values for Hex-Drive Bolts in Metallic Materials
Figure 2

BOEING PROPRIETARY - Copyright © - Unpublished Work - See title page for details.

NOMINAL THREAD SIZE	INSTALLATION TORQUE (INCH-POUNDS)				NUTS ON BACB30WQ AND BACB30WR BOLTS	
	NUTS ON BACB30PT BOLTS					
	EXCEPT BACN10WM		BACN10WM			
	NOMINAL	RANGE	NOMINAL	RANGE	NOMINAL	RANGE
0.1900-32	N/A	N/A	N/A	N/A	30	25-35
0.2500-28	70	60-80	80	60-100	90	75-105
0.3125-24	135	125-145	145	125-165	155	135-175
0.3750-24	218	200-235	230	200-260	245	220-270
0.4375-20	N/A	N/A	N/A	N/A	340	310-370

TABLE I

NOTES

- THE SOURCE OF INFORMATION FOR THIS FIGURE CAN BE FOUND IN BOEING PROCESS SPECIFICATION BAC5060.
- TORQUE VALUES IN THIS FIGURE CAN BE USED UNLESS AN APPLICABLE ENGINEER DRAWING SHOWS DIFFERENTLY.

Torque Values for Radius Lead-In Bolts in Metallic Materials
Figure 3

BOEING PROPRIETARY - Copyright © - Unpublished Work - See title page for details.

NOMINAL FASTENER DIAMETER (INCH)	PIN	TORQUE, INCH-POUNDS				
		SHEAR-TYPE HEX DRIVE PINS:				TENSION-TYPE HEX DRIVE PINS:
		BACB30VT BACB30VU BACB30YP	BACB30FM BACB30FN BACB30MY BACB30NW BACB30NZ	BACB30ND BACB30YL BACB30YN		BACB30JC BACB30MB BACB30NX BACB30NY BACB30YK BACB30YM
	NUT	MS21043 BACN10JC MS21042 NAS1291 KFN305 NAS679 BACN10YR BACN10YZ BACN10ZV	MS21043 BACN10JC BACN10XJ MS21042 NAS1291 KFN305 KFN600 H600 NAS679 KFN511 BACN10YR BACN11E	BACN10WM	KFN609 BACN10ZZ	NAS1804 NAS1805 BACN10GW KFN305 BACN10MT KFN511 MS21042 BACN10YT
5/32 3/16		15 TO 25 25 TO 36		--- ---	--- 23 TO 28	25 TO 35 30 TO 40
1/4 5/16		60 TO 80 130 TO 160		60 TO 80 125 TO 145	60 TO 75 120 TO 150	80 TO 95 150 TO 200
3/8 7/16		200 TO 240 270 TO 330		200 TO 300 ---	180 TO 210 ---	260 TO 360 390 TO 480
1/2 9/16		370 TO 430 500 TO 575		--- ---	--- ---	640 TO 800 740 TO 900
5/8 3/4		625 TO 700 900 TO 1000		--- ---	--- ---	800 TO 1000 1300 TO 1650

LOCKNUT TORQUE VALUES
TABLE I

NOTES:

- THE SOURCE OF INFORMATION FOR THIS FIGURE CAN BE FOUND IN BOEING PROCESS SPECIFICATION BAC5063.

[A] WHEN PIN PART NUMBER AND NUT PART NUMBER SPECIFIED ON THE DRAWING APPEAR IN DIFFERENT COLUMNS, USE THE INSTALLATION TORQUE FROM THE COLUMN WITH THE LOWER TORQUE VALUE.

[B] INSTALLATION TORQUE FOR 3/4-16 BACB30MR, BACB30XL, BACB30NM, BACB30XJ, BACB30MS, BACB30NN, BACB30XK AND BACB30XM IS 1000-2200 IN-LB. THE INSTALLATION TORQUE FOR ALL OTHER 3/4-16 BOLTS LISTED IN THIS COLUMN IS 2400 TO 3500 IN-LB.

[C] THIS TABLE DOES NOT APPLY TO INSTALLATIONS WHERE A NUT, BOLT HEAD, OR WASHER BEARS DIRECTLY ON UNREINFORCED (EXAMPLE: NYLON) THERMOPLASTIC MATERIALS.

Torque Values for Fasteners in Composite Materials
Figure 4 (Sheet 1)

BOEING PROPRIETARY - Copyright © - Unpublished Work - See title page for details.

NUT NUMBER AND STYLE		BACN10HR (12 POINT) BACN10HC (BARREL NUT)	NAS1804 (12 POINT) NAS1805 (12 POINT) BACN10JA (PLATE NUT) BACN10JB (PLATE NUT) NAS577 (BARREL NUT) BACN10JD (CASTELLATED-THICK STYLE 0.4375 THRU 1.250)			
BOLT HEAD STYLE		12 POINT	12 POINT	HEX	PAN	100 DEG
BOLT PART NUMBER		BACB30US	BACB30LE BACB30MR BACB30XL BACB30PN MS21250	BACB30NM BACB30XJ BACB30LM NAS6603 THRU NAS6620 NAS6703 THRU NAS6720 NAS6803 THRU NAS6820	NAS1216	BACB30LP BACB30LU BACB30LR BACB30MS BACB30NN BACB30XK BACB30XM S12GP
THREAD SIZE AND BASIC MAJOR DIAMETER		IN-LBS	IN-LBS			
0.1900	10-32	50 TO 70	30 TO 35			
0.2500	1/4-28	90 TO 125	65 TO 100			
0.3125	5/16-24	180 TO 250	130 TO 200			
0.3750	3/8-24	300 TO 500	220 TO 410			
0.4375	7/16-20	510 TO 840	370 TO 690			
0.5000	1/2-20	870 TO 1300	630 TO 1070			
0.5625	9/16-18	1300 TO 1800	1000 TO 1470			
0.6250	5/8-18	1900 TO 2300	1400 TO 1900			
0.7500	3/4-16	3300 TO 4300	[B]			
0.8750	7/8-14	5100 TO 6700	3700 TO 5500			
1.0000	1-12 OR 1-14	7000 TO 10900	5100 TO 8900			
1.1250	1-1/8-12	9500 TO 13000	6900 TO 10700			
1.2500	1-1/4-12	15800 TO 19200	11500 TO 15700			
1.3750	1-3/8-12	20000 TO 24000	---			

INSTALLATION TORQUE RANGE - TENSION BOLTS
TABLE II

Torque Values for Fasteners in Composite Materials
Figure 4 (Sheet 2)

BOEING PROPRIETARY - Copyright © - Unpublished Work - See title page for details.

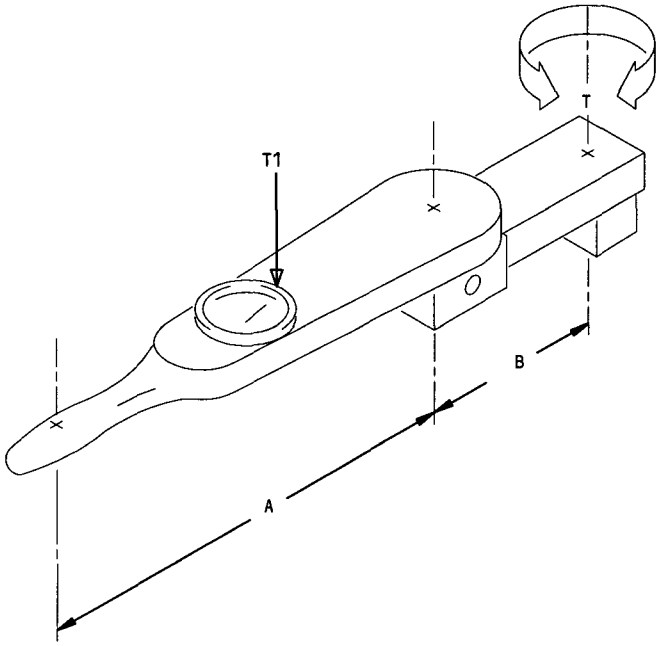

A = LENGTH OF TORQUE WRENCH

B = LENGTH OF ADAPTER, AND EXTENSION BETWEEN ADAPTER AND TORQUE WRENCH IF USED.

T = ACTUAL TORQUE ON NUT

T1 = INDICATED TORQUE ON WRENCH (CORRECTED TORQUE WRENCH READING)

FOR THE FOLLOWING EXAMPLES ASSUME THAT:

A = 10 IN.
B = 10 IN.
C = 10 IN.
T = 150 POUND-INCHES

USING HANDLE EXTENSION ONLY
NO CORRECTION IS NECESSARY

T1 = T

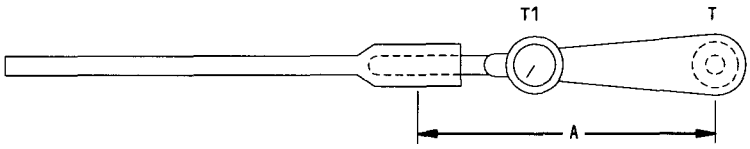

METHOD I

USING ADAPTER WITH EXTENSION BETWEEN ADAPTER AND WRENCH BOTH IN LINE WITH WRENCH. A CORRECTION IS NECESSARY

$$T1 = \frac{T \times A}{A + B}$$

$$T1 = \frac{150 \times 10}{10 + 10}$$

T1 = 75 POUND-INCHES

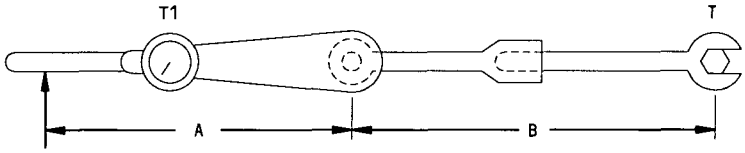

METHOD II

USING BOTH HANDLE EXTENSION AND ADAPTER.
A CORRECTION IS NECESSARY

$$T1 = \frac{T \times (A + C)}{(A + B + C)}$$

$$T1 = \frac{150 \times (10 + 10)}{(10 + 10 + 10)}$$

T1 = 100 POUND-INCHES

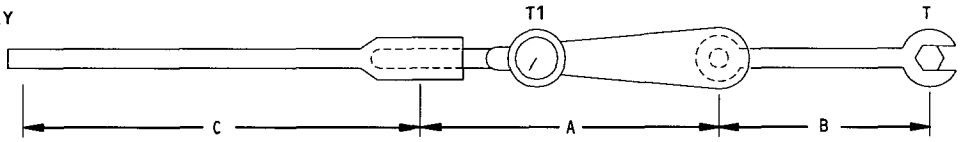

METHOD III

Torque Wrench Adapters and Extensions
Figure 5 (Sheet 1)

BOEING PROPRIETARY - Copyright © - Unpublished Work - See title page for details.

USING ADAPTER AT ANGLE OTHER THAN 90°.
A CORRECTION IS NECESSARY

$$T1 = \frac{T \times A}{A + B}$$

$$T1 = \frac{150 \times 10}{10 + 10}$$

T1 = 75 POUND-INCHES

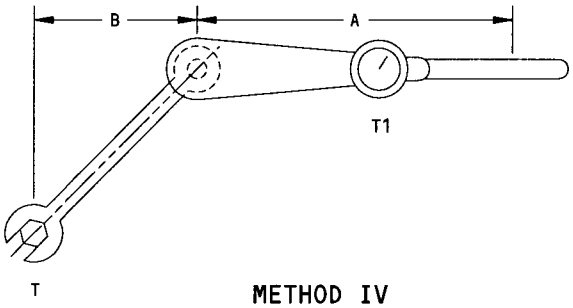

METHOD IV

USING ADAPTER AT RIGHT ANGLE TO THE
WRENCH. NO CORRECTION IS NECESSARY.

T1 = T

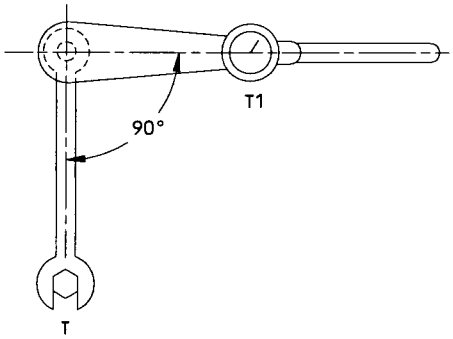

METHOD V

Torque Wrench Adapters and Extensions
Figure 5 (Sheet 2)

BOEING PROPRIETARY - Copyright © - Unpublished Work - See title page for details.

FASTENER HOLE SIZES

1. Applicability

A. This subject gives the hole size data for repair fasteners used in metallic and composite structures.

2. General

A. Refer to Figure 1 for an index of fastener hole data and cross references to Boeing Process Specifications.

B. Bolts, lockbolts, hex-drive bolts, and radius lead-in bolts can be installed in different types of holes. Some of the tables in this subject give hole sizes for the different types of holes. Refer to Paragraph 4 for hole definitions.

3. References

A. SRM 51-30-2, Fastener Installation

B. SRM 51-30-8, Countersinking

C. SRM 51-30-9, Cold Working of Holes for Fatigue Improvement

D. SRM 51-10-7, Hole Drilling and Machining of Composite Structures.

4. Hole Definitions

A. Clearance Fit - A hole with size limits larger than the shank diameter of the fastener to be installed. The installed fastener will always have a clearance between the shank and the mating structure. These types of holes are used with removable fasteners.

(1) Close Ream - A hole that permits a minimum clearance between the fastener shank and the mating structure. This type of hole has the tightest tolerance of all holes used for removable fasteners.

(2) Class I - A hole that has sufficient clearance to permit easy removal of the fastener, but will also permit sufficient shear load transfer in the joint. This is the most used type of hole for removable fastener installations.

BOEING PROPRIETARY - Copyright © - Unpublished Work - See title page for details.

4. A. (3) Class II - A hole that is larger than a Class I hole. This is the most used type of hole for nutplate installations.

(4) Class III - A hole that is larger than a Class II hole. This hole is not used frequently in structural repairs.

B. Interference Fit - A hole with size limits that are smaller than the shank diameter of the fastener to be installed. The installed fastener will always have an interference between the shank and the mating structure. An Interference Fit hole will always have a permanent fastener installed in it.

C. Transition Fit - A hole with size limits that are very close to the shank diameter of the fastener to be installed. The installed fastener can have an interference, or it can have a clearance between the shank and the mating structure. A Transition fit hole will always have a permanent fastener installed in it.

BOEING PROPRIETARY - Copyright © - Unpublished Work - See title page for details.

TYPE OF FASTENER HOLE	FIGURE	PROCESS SPECIFICATION
GENERAL INFORMATION	2	BAC5004
SOLID RIVETS	3	BAC5004-1
PERMANENT STRAIGHT SHANK FASTENERS	4	BAC5004-2
BLIND RIVETS AND BOLTS	5	BAC5004-3
BOLTS	6	BAC5009
FLUID-TIGHT FASTENERS	7	BAC5047
RADIUS LEAD-IN BOLTS	8	BAC5060
HOLES IN COMPOSITES	9	BAC5063

INDEX FOR 51-30-5 AND CROSS REFERENCE TO BOEING PROCESS SPECIFICATIONS

NOTES

- REFER TO SRM 51-30-8 FOR BACR15FV AND MS14218 RIVET HOLE SIZES.
- REFER TO SRM 51-30-9 FOR REAMED AND FINISHED HOLE SIZES IN COLD WORKED HOLES.

Boeing Process Specification References
Figure 1

BOEING PROPRIETARY - Copyright © - Unpublished Work - See title page for details.

ACCEPTABLE	NOT ACCEPTABLE
1. Circumferential scratches which are a minimum of 1/16 inch or 10% of the part thickness from the surface of the part, whichever is smaller. 2. Spiral scratches which are a minimum of 1/16 inch or 25% of the part thickness from the surface of the part, whichever is smaller. 3. Longitudinal scratches not more than 50% of length of hole in any one part and which neither starts nor ends within 1/16 inch or 25% of the part thickness from the surface of the part, whichever is smaller. 4. Surface roughness which does not exceed 125 microinches Ra.	1. Scratches, nicks or cuts intersecting a part surface or exceeding limits specified as acceptable.

SURFACE DEFECT CRITERIA FOR FASTENER HOLES
TABLE I

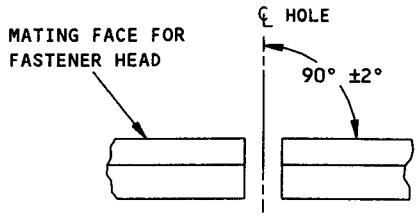

HOLES FOR ALL PROTRUDING AND FLUSH HEAD FASTENERS MUST BE WITHIN 2° OF PERPENDICULAR TO THE FACE ON WHICH THE FASTENER HEAD BEARS

HOLE ALIGN CHECK
DETAIL I

NOTES

- THE SOURCE OF INFORMATION FOR THIS FIGURE CAN BE FOUND IN BOEING PROCESS SPECIFICATIONS BAC5004, BAC5009, BAC5047, AND BAC5060.
- THE DATA IN THIS FIGURE APPLIES TO FIGURES 3 THRU 8. REFER TO SRM 51-10-7 FOR SIMILAR INFORMATION FOR HOLES IN COMPOSITE STRUCTURE.

General Information for Fastener Holes in Metal Structure
Figure 2

BOEING PROPRIETARY - Copyright © - Unpublished Work - See title page for details.

NOMINAL RIVET DIAMETER	RECOMMENDED PILOT DRILL SIZE	STANDARD RIVETS				BACR15GF, NAS1097, BACR15CE RIVETS			
		RECOMMENDED DRILL		HOLE DIAMETER LIMITS		RECOMMENDED DRILL		HOLE DIAMETER LIMITS	
		NO.	SIZE	MIN	MAX	NO.	SIZE	MIN	MAX
1/16	—	51	(0.067)	0.066	0.072	—	—	—	—
3/32	—	40	(0.098)	0.098	0.103	40	(0.098)	0.098	0.103
1/8	3/32	30	(0.128)	0.128	0.135	30	(0.128)	0.128	0.134
5/32	1/8	20	(0.161)	0.159	0.171	21	(0.159)	0.159	0.165
3/16	1/8	10	(0.194)	0.191	0.202	11	(0.191)	0.190	0.196
1/4	1/8	F	(0.257)	0.254	0.265	F	(0.257)	0.255	0.261
5/16	1/8	O	(0.316)	0.316	0.327	O	(0.316)	0.316	0.323
3/8	1/8	V	(0.377)	0.377	0.390	V	(0.377)	0.377	0.385

STANDARD HOLE SIZES FOR SOLID RIVETS
(EXCEPT FOR BACR15FV, MS14218 AND NASM-83459 RIVETS)
TABLE I

ORIGINAL RIVET DIAMETER	(-6) 3/16		(-8) 1/4		(-10) 5/16		(-12) 3/8	
OVERSIZE RIVET DIAMETER	(-7) 7/32		(-9) 9/32		(-11) 11/32		(-13) 13/32	
	MIN	MAX	MIN	MAX	MIN	MAX	MIN	MAX
MS20426 BACR15FT MS20470 NAS1242 BACR15BA BACR15BB	0.221	0.233	0.284	0.296	0.346	0.358	0.407	0.421
NAS1097 BACR15GF BACR15CE	0.223	0.229	0.286	0.293	—	—	—	—

OVERSIZE HOLE DIMENSIONS FOR SOLID RIVETS
(EXCEPT FOR BACR15FV, MS14218 AND NASM-83459 RIVETS)
TABLE II

NOTES

- THE SOURCE OF INFORMATION FOR THIS FIGURE CAN BE FOUND IN BOEING PROCESS SPECIFICATION BAC5004-1.
- THIS DATA APPLIES TO NON FLUID-TIGHT RIVETS.
- HOLE DIAMETERS IN THIS FIGURE CAN BE USED UNLESS AN APPLICABLE ENGINEER DRAWING SHOWS DIFFERENTLY.

Solid Rivet Fastener Holes
Figure 3

BOEING PROPRIETARY - Copyright © - Unpublished Work - See title page for details.

NOTES

- THE SOURCE OF INFORMATION FOR THIS FIGURE CAN BE FOUND IN BOEING PROCESS SPECIFICATION BAC5004-2.
- THIS DATA APPLIES TO PERMANENT TYPE, NONFLUID TIGHT, STRAIGHT SHANK FASTENERS (LOCKBOLTS AND HEX-DRIVE BOLTS).
- HOLE DIAMETERS IN THIS FIGURE CAN BE USED UNLESS AN APPLICABLE ENGINEER DRAWING SHOWS DIFFERENTLY.
- SEE TABLE I FOR INITIAL HOLE SIZES. SEE TABLES II AND III FOR OVERSIZE FASTENERS.
- CLOSE REAM HOLE DIAMETERS ARE APPLICABLE TO THE FOLLOWING STRUCTURES:
  - TITANIUM
  - STEEL
  - ALUMINUM AND TITANIUM
  - ALUMINUM AND STEEL.
- SEE DETAIL I AND TABLE IV FOR FINISHED HOLE SPECIFICATIONS FOR PROTRUDING HEAD FASTENERS. REFER TO SRM 51-30-8 FOR EQUIVALENT COUNTERSINK FASTENER SPECIFICATIONS.

[A] FOR 5/32 (0.164) INCH DIAMETER BACB30DX, BACB30DY, BACB30GP, AND BACB30GQ FASTENERS, THE HOLE DIAMETER LIMITS ARE 0.162 TO 0.165 INCH.

[B] IF THE EDGE MARGIN IS LESS THAN TWO DIAMETERS, TELL AN ENGINEER WHO HAS THE AUTHORITY TO DO AN ANALYSIS AND MAKE A DECISION.

[C] OVERSIZE FASTENER IS NOT AVAILABLE

[D] USE A 3/16 FASTENER IN A STANDARD SIZE HOLE.

[E] FOR PROPER INSTALLATION HOLE DIAMETER, REFER TO THE ENGINEERING DRAWING OR SERVICE BULLETIN TO FIND THE INITIAL HOLE SIZE.

[F] IF THE EDGE MARGIN IS LESS THAN 2.5 DIAMETERS, TELL AN ENGINEER WHO HAS THE AUTHORITY TO DO AN ANALYSIS AND MAKE A DECISION.

[G] TELL AN ENGINEER WHO HAS THE AUTHORITY TO DO AN ANALYSIS AND MAKE A DECISION.

[H] MAKE THE RADIUS BLEND SMOOTHLY WITH THE SHANK DIAMETER.

[I] FOR 1/64 OVERSIZE, ADD 0.016 INCH TO EACH OF THE MIN AND MAX DIAMETERS.

FOR 1/32 OVERSIZE, ADD 0.031 INCH TO EACH OF THE MIN AND MAX DIAMETERS.

[J] THE CHAMFER IS NOT NECESSARY FOR 5/32 THRU 3/8 INCH DIAMETER FASTENERS IF THEY ARE INSTALLED IN HOLES THAT ARE NOT COLDWORKED.

Permanent Straight Shank Fastener Holes
Figure 4 (Sheet 1)

BOEING PROPRIETARY - Copyright © - Unpublished Work - See title page for details.

NOMINAL FASTENER DIAMETER	HOLE DIAMETER LIMITS FOR ALUMINUM STRUCTURES (INCH) (TRANSITION FIT)	HOLE DIAMETER LIMITS FOR TITANIUM AND STEEL STRUCTURES, AND COMBINATIONS WITH ALUMINUM (INCH) (CLOSE REAM)
5/32 (0.164) -5	0.161 TO 0.164 [A]	0.1635 TO 0.1645
3/16 (0.190) -6	0.187 TO 0.190	0.1895 TO 0.1905
1/4 (0.250) -8	0.247 TO 0.250	0.2495 TO 0.2505
5/16 (0.313) -10	0.309 TO 0.313	0.3120 TO 0.3130
3/8 (0.375) -12	0.371 TO 0.375	0.3745 TO 0.3755
7/16 (0.438) -14	0.434 TO 0.438	0.4370 TO 0.4380
1/2 (0.500) -16	0.496 TO 0.500	0.4995 TO 0.5005
9/16 (0.563) -18	0.559 TO 0.563	0.5620 TO 0.5630
5/8 (0.625) -20	0.621 TO 0.625	0.6245 TO 0.6255
3/4 (0.750) -24	0.746 TO 0.750	0.7495 TO 0.7505
7/8 (0.875) -28	0.871 TO 0.875	0.8745 TO 0.8755
1 (1.000) -32	0.996 TO 1.000	0.9995 TO 1.0005

INITIAL FASTENER HOLE DIAMETER LIMITS
TABLE I

Permanent Straight Shank Fastener Holes
Figure 4 (Sheet 2)

BOEING PROPRIETARY - Copyright © - Unpublished Work - See title page for details.

		INITIAL FASTENER NOMINAL DIAMETER								
		(-5)	(-6)	(-8)	(-10)	(-12)	(-14)	(-16)	(-18)	(-20)
		0.164	0.190	0.250	0.313	0.375	0.438	0.500	0.563	0.625
		INITIAL HOLE SIZE								
	TRANSITION FIT	0.164	0.190	0.250	0.313	0.375	0.438	0.500	0.563	0.625
		0.161	0.187	0.247	0.309	0.371	0.434	0.496	0.559	0.621
	CLOSE REAM	0.1645	0.1905	0.2505	0.3130	0.3755	0.4380	0.5005	0.5630	0.6255
		0.1635	0.1895	0.2495	0.3120	0.3745	0.4370	0.4995	0.5620	0.6245
NOMINAL OVERSIZE		HOLE SIZES FOR OVERSIZE REPLACEMENT FASTENERS								
1/64	TRANSITION FIT	C	0.203	0.266	0.328	0.391	0.453	0.516	0.579	0.641
			0.200	0.263	0.325	0.388	0.450	0.513	0.575	0.637
	CLOSE REAM	C	0.2036	0.2661	0.3286	0.3911	0.4536	0.5161	0.5786	0.6411
			0.2026	0.2651	0.3276	0.3901	0.4526	0.5151	0.5776	0.6401
1/32 B	TRANSITION FIT	D	0.219	0.281	0.344	0.406	0.469	0.531	0.595	0.657
			0.216	0.278	0.341	0.403	0.466	0.528	0.591	0.653
	CLOSE REAM	D	0.2192	0.2817	0.3442	0.4067	0.4692	0.5317	0.5942	0.6567
			0.2182	0.2807	0.3432	0.4057	0.4682	0.5307	0.5932	0.6557
3/64 B	TRANSITION FIT	C	0.235	0.297	0.360	0.422	0.486	0.547	0.609	0.672
			0.232	0.294	0.357	0.419	0.482	0.544	0.606	0.669
	CLOSE REAM	C	0.2349	0.2973	0.3599	0.4224	0.4848	0.5474	0.6099	0.6724
			0.2339	0.2963	0.3589	0.4214	0.4838	0.5464	0.6089	0.6714

OVERSIZE FASTENER HOLE DIAMETER LIMITS (TRANSITION FIT AND CLOSE REAM)
TABLE II

Permanent Straight Shank Fastener Holes
Figure 4 (Sheet 3)

BOEING PROPRIETARY - Copyright © - Unpublished Work - See title page for details.

NOMINAL AND OVERSIZE FASTENER	HOLE SIZE-INITIAL AND OVERSIZE INTERFERENCE FIT [E]				NOMINAL AND OVERSIZE	HOLE SIZE-INITIAL AND OVERSIZE INTERFERENCE FIT [E]			
	0.0000 TO 0.0030	0.0005 TO 0.0035	0.0005 TO 0.0045	0.0010 TO 0.0040		0.0000 TO 0.0030	0.0005 TO 0.0035	0.0005 TO 0.0045	0.0010 TO 0.0040
5/32 (-5)	0.1605 0.1625	0.1600 0.1620	0.1590 0.1620	0.1595 0.1615	7/16 (-14)	0.4340 0.4360	0.4335 0.4355	0.4325 0.4355	0.4330 0.4350
1/64	[C]	[C]	[C]	[C]	1/64 [F]	0.4496 0.4516	0.4491 0.4511	0.4481 0.4511	0.4486 0.4506
1/32 [G]	[D]	[D]	[D]	[D]	1/32 [G]	0.4652 0.4672	0.4647 0.4667	0.4637 0.4667	0.4642 0.4662
3/16 (-6)	0.1865 0.1885	0.1860 0.1880	0.1850 0.1880	0.1855 0.1875	1/2 (-16)	0.4965 0.4985	0.4960 0.4980	0.4950 0.4980	0.4955 0.4975
1/64 [F]	0.1996 0.2016	0.1991 0.2011	0.1981 0.2011	0.1986 0.2006	1/64 [F]	0.5121 0.5141	0.5116 0.5136	0.5106 0.5136	0.5111 0.5131
1/32 [G]	0.2152 0.2172	0.2147 0.2167	0.2137 0.2167	0.2142 0.2162	1/32 [G]	0.5277 0.5297	0.5272 0.5292	0.5262 0.5292	0.5267 0.5287
1/4 (-8)	0.2465 0.2485	0.2460 0.2480	0.2450 0.2480	0.2455 0.2475	9/16 (-18)	0.5585 0.5605	0.5580 0.5600	0.5570 0.5600	0.5575 0.5595
1/64 [F]	0.2621 0.2641	0.2616 0.2636	0.2606 0.2636	0.2611 0.2631	1/64 [F]	0.5741 0.5761	0.5736 0.5766	0.5726 0.5756	0.5731 0.5751
1/32 [G]	0.2777 0.2797	0.2772 0.2792	0.2762 0.2792	0.2767 0.2787	1/32 [G]	0.5897 0.5917	0.5892 0.5912	0.5882 0.5912	0.5887 0.5907
5/16 (-10)	0.3090 0.3110	0.3085 0.3105	0.3075 0.3105	0.3080 0.3100	5/8 (-20)	0.6210 0.6230	0.6205 0.6225	0.6195 0.6225	0.6200 0.6220
1/64 [F]	0.3246 0.3266	0.3241 0.3261	0.3231 0.3261	0.3236 0.3256	1/64 [F]	0.6366 0.6386	0.6361 0.6381	0.6351 0.6381	0.6356 0.6376
1/32 [G]	0.3402 0.3422	0.3397 0.3417	0.3387 0.3417	0.3392 0.3412	1/32 [G]	0.6522 0.6542	0.6517 0.6537	0.6507 0.6537	0.6512 0.6532
3/8 (-12)	0.3715 0.3735	0.3710 0.3730	0.3700 0.3730	0.3705 0.3725	3/4 (-24)	0.7460 0.7480	0.7455 0.7475	0.7445 0.7475	0.7450 0.7470
1/64 [F]	0.3871 0.3891	0.3866 0.3886	0.3856 0.3886	0.3861 0.3881	1/64 [F]	0.7616 0.7636	0.7611 0.7631	0.7601 0.7631	0.7606 0.7626
1/32 [G]	0.4027 0.4047	0.4012 0.4042	0.4012 0.4042	0.4017 0.4037	1/32 [G]	0.7772 0.7792	0.7767 0.7787	0.7757 0.7787	0.7762 0.7782

OVERSIZE FASTENER HOLE DIAMETER LIMITS (INTERFERENCE FIT)
TABLE III

Permanent Straight Shank Fastener Holes
Figure 4 (Sheet 4)

BOEING PROPRIETARY - Copyright © - Unpublished Work - See title page for details.

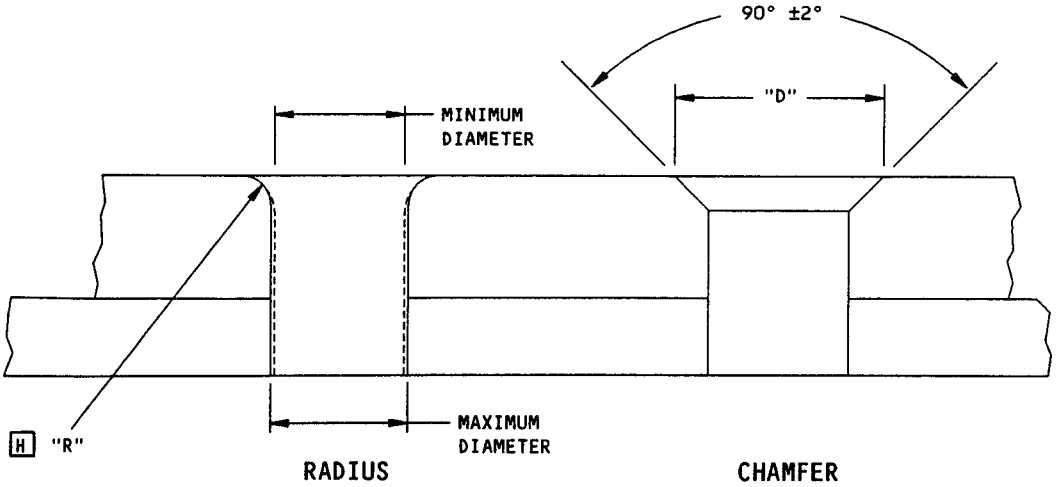

DETAIL I

NOMINAL FASTENER DIAMETER	IN ALL METAL STRUCTURE "R" RADIUS		IN ALUMINUM AND MAGNESIUM STRUCTURE "D" I J CHAMFER DIA		MIN SHEET THICKNESS TO BE CHAMFERED OR RADIUSED	IN ALL OTHER METAL STRUCTURE "D" CHAMFER DIA I		MIN SHEET THICKNESS TO BE CHAMFERED OR RADIUSED
	MIN	MAX	MIN	MAX		MIN	MAX	
5/32	0.025	0.035	0.188	0.208	0.060	0.218	0.233	0.107
3/16			0.214	0.234	0.060	0.242	0.257	0.127
1/4			0.274	0.294	0.060	0.300	0.320	0.150
5/16	0.030	0.040	0.343	0.363	0.060	0.372	0.392	0.183
3/8			0.406	0.426	0.060	0.435	0.455	0.209
7/16			0.468	0.488	0.060	0.497	0.517	0.236
1/2			0.531	0.551	0.060	0.560	0.580	0.253
9/16	0.040	0.050	0.606	0.626	0.075	0.657	0.677	0.320
5/8			0.668	0.688	0.075	0.719	0.739	0.320
3/4	0.045	0.055	0.800	0.820	0.085	0.856	0.876	0.353
7/8	0.050	0.060	0.931	0.951	0.090	0.993	1.013	0.387
1	0.060	0.070	1.069	1.089	0.105	1.142	1.162	0.453

FILLET RELIEF LIMITS FOR PROTRUDING HEAD
HEX-DRIVE BOLT AND LOCKBOLT HOLES

TABLE IV

Permanent Straight Shank Fastener Holes
Figure 4 (Sheet 5)

BOEING PROPRIETARY - Copyright © - Unpublished Work - See title page for details.

HOLE DIAMETERS FOR NAS 1738, NAS 1739, BACR15FP AND BACR15FR		
NOMINAL FASTENER DIAMETER	MINIMUM HOLE SIZE (INCH)	MAXIMUM HOLE SIZE (INCH)
1/8	0.143	0.146
5/32	0.176	0.180
3/16	0.205	0.209
ALL OTHER BLIND RIVETS		
NOMINAL FASTENER DIAMETER	MINIMUM HOLE SIZE (INCH)	MAXIMUM HOLE SIZE (INCH)
3/32	0.097	0.101
1/8	0.129	0.132
5/32	0.160	0.164
3/16	0.192	0.196
1/4	0.256	0.261

HOLE SIZES FOR BLIND RIVETS
TABLE I

NOMINAL FASTENER DIAMETER	HOLE SIZE (INCH)	
	MINIMUM	MAXIMUM
5/32	0.165	0.168
3/16	0.199	0.202
1/4	0.260	0.263
5/16	0.312	0.315
3/8	0.375	0.378
7/16	0.437	0.441

HOLE SIZES FOR BLIND BOLTS BACB30AY,
BACB30CC, AND BACB30JG
TABLE II

NOTES

- THE SOURCE OF INFORMATION FOR THIS FIGURE CAN BE FOUND IN BOEING SPECIFICATION BAC5004-3.
- REFER TO TABLE I FOR BLIND RIVETS AND TABLES II THRU IV FOR BLIND BOLTS.

Holes for Blind Rivets and Bolts
Figure 5 (Sheet 1)

BOEING PROPRIETARY - Copyright © - Unpublished Work - See title page for details.

NOMINAL FASTENER DIAMETER	HOLE SIZE (INCH)	
	MINIMUM	MAXIMUM
5/32	0.164	0.167
3/16	0.199	0.202
1/4	0.260	0.263
5/16	0.312	0.315
3/8	0.374	0.377
7/16	0.437	0.441
1/2	0.500	0.504

HOLE SIZES FOR BLIND BOLTS MS90353, MS90354, MS21140, AND MS21141
TABLE III

INITIAL FASTENER	1/64 OVERSIZE FASTENER		LIMITS	NOMINAL FASTENER DIAMETER				
				5/32	3/16	1/4	5/16	3/8
			LIMITS	INITIAL HOLE SIZE				
			MIN	0.164	0.199	0.260	0.312	0.374
			MAX	0.167	0.202	0.263	0.315	0.377
MS21140-()() MS21140-()()P	BACB30VJ()C() BACB30VJ()CD()	OB100-EU()() OB100-EU()()CD	LIMITS	1/64 OVERSIZE				
MS21141-()() MS21141-()()P	BACB30VH()C() BACB30VH()CD()	OBP-EU()() OBP-EU()()CD	MIN	0.180	0.215	0.276	0.328	0.390
MS90353-()() MS90354-()()	BACB30VJ()-() BACB30VH()-()	OB100-T()() OBP-T()()	MAX	0.183	0.218	0.279	0.331	0.393

OVERSIZE FASTENERS AND HOLE SIZES FOR OVERSIZE BLIND BOLTS
TABLE IV

Holes for Blind Rivets and Bolts
Figure 5 (Sheet 2)

BOEING PROPRIETARY - Copyright © - Unpublished Work - See title page for details.

TYPE OF FASTENER HOLE	TABLE
CLOSE REAM HOLES	I
CLASS I HOLES	II
CLASS II HOLES	III
CLASS III HOLES	IV

INDEX FOR FIGURE 6

NOTES

- THE SOURCE OF INFORMATION FOR THIS FIGURE CAN BE FOUND IN BOEING PROCESS SPECIFICATION BAC5009.
- REFER TO THE ENGINEER DRAWING OR SERVICE BULLETIN. USE THE SAME HOLE TYPE (CLOSE REAM, CLASS I, CLASS II, OR CLASS III) AS SPECIFIED IN THE ENGINEER DRAWING, SERVICE BULLETIN, OR SRM REPAIR. REFER TO TABLES I THRU IV FOR OVERSIZE HOLE DIMENSIONS.
- SEE DETAIL I AND TABLE V FOR FILLET RELIEF SPECIFICATIONS FOR PROTRUDING HEAD FASTENERS. REFER TO SRM 51-30-8 FOR EQUIVALENT COUNTER-SINK FASTENER SPECIFICATIONS.

[A] MAKE THE RADIUS BLEND SMOOTHLY WITH THE SHANK DIAMETER.

[B] FOR OVERSIZE BOLTS, ADD 0.010 INCH TO EACH VALUE.

EXAMPLE: IF INITIAL "R" IS 0.041 TO 0.051 INCH, THEN THE "R" VALUES FOR OVER-SIZE FASTENERS ARE 0.051 TO 0.061 INCH.

[C] FOR OVERSIZE BOLTS, MULTIPLY THE MAXIMUM RADIUS FROM THE INITIAL BOLT TIMES TWO AND ADD THE MAXIMUM SHANK DIAMETER OF THE OVERSIZE BOLT. THE SPECIFIED TOLERANCE IS -0.000/+0.020 INCH.

EXAMPLE: IF THE INITIAL "R" IS 0.041 TO 0.051 INCH AND THE OVERSIZE SHANK DIAMETER IS 0.2804 TO 0.2814 INCH, THEN THE CALCULATION IS (0.051 X 2) + 0.2814 - 0.000/+0.020 = 0.3834 TO 0.3854 INCH.

[D] IF THE EDGE MARGIN IS LESS THAN TWO DIAMETERS, TELL AN ENGINEER WHO HAS THE AUTHORITY TO DO AN ANALYSIS AND MAKE A DECISION.

Holes for Bolts
Figure 6 (Sheet 1)

BOEING PROPRIETARY - Copyright © - Unpublished Work - See title page for details.

OVERSIZE FASTENER	NOMINAL OVERSIZE	LIMIT	3/16 (0.1900)	1/4 (0.2500)	5/16 (0.3125)	3/8 (0.3750)	7/16 (0.4375)
CLOSE REAM HOLE							
--	INITIAL HOLE SIZE	MAX	0.1905	0.2505	0.3130	0.3755	0.4380
		MIN	0.1895	0.2495	0.3120	0.3745	0.4370
BACB30G	1/64 (0.0156)	MAX	--	--	--	--	--
		MIN	--	--	--	--	--
BACB30AC	1/64 (0.0156)	MAX	--	--	--	--	--
		MIN	--	--	--	--	--
BACB30J	1/32 (0.0312)	MAX	--	--	--	--	--
		MIN	--	--	--	--	--
BACB30AJ	1/32 (0.0312)	MAX	--	0.2814	0.3439	0.4064	0.4689
		MIN	--	0.2804	0.3429	0.4054	0.4679
BACB30DK	1/32 (0.0312)	MAX	--	--	--	--	--
		MIN	--	--	--	--	--
BACB30EG NAS2903 THRU 2920 NAS1243 THRU 1250 NAS1703 THRU 1710	1/64 (0.0156)	MAX	0.2036	0.2661	0.3286	0.3911	0.4536
		MIN	0.2026	0.2651	0.3276	0.3901	0.4526
BACB30EH NAS3003 THRU 3020 NAS1253 THRU 1260 NAS1603 THRU 1620	1/32 (0.0312)	MAX	0.2192	0.2817	0.3442	0.4067	0.4692
		MIN	0.2182	0.2807	0.3432	0.4057	0.4682
X CODE	1/64 (0.0156)	MAX	0.2036	0.2661	0.3286	0.3911	0.4536
		MIN	0.2026	0.2651	0.3276	0.3901	0.4526
Y CODE	1/32 (0.0312)	MAX	0.2192	0.2817	0.3442	0.4067	0.4692
		MIN	0.2182	0.2807	0.3432	0.4057	0.4682
BACB30TL	4/64 (0.0625)	MAX	--	--	--	--	--
		MIN	--	--	--	--	--
	5/64 (0.0781)	MAX	--	--	--	--	--
		MIN	--	--	--	--	--

HOLE SIZES FOR OVERSIZE REPLACEMENT BOLTS - CLOSE REAM HOLE (INCHES)
TABLE I D

Holes for Bolts
Figure 6 (Sheet 2)

BOEING PROPRIETARY - Copyright © - Unpublished Work - See title page for details.

OVERSIZE FASTENER	NOMINAL OVERSIZE	LIMIT	1/2 (0.5000)	9/16 (0.5625)	5/8 (0.6250)	3/4 (0.7500)	7/8 (0.8750)
CLOSE REAM HOLE							
--	INITIAL HOLE SIZE	MAX	0.5005	0.5630	0.6255	0.7505	0.8755
		MIN	0.4995	0.5620	0.6245	0.7495	0.8745
BACB30G	1/64 (0.0156)	MAX	--	--	--	--	--
		MIN	--	--	--	--	--
BACB30AC	1/64 (0.0156)	MAX	--	--	--	0.7673	--
		MIN	--	--	--	0.7663	--
BACB30J	1/32 (0.0312)	MAX	--	--	--	--	--
		MIN	--	--	--	--	--
BACB30AJ	1/32 (0.0312)	MAX	0.5313	0.5943	0.6567	0.7815	0.9063
		MIN	0.5303	0.5933	0.6557	0.7805	0.9053
BACB30DK	1/32 (0.0312)	MAX	--	--	--	--	--
		MIN	--	--	--	--	--
BACB30EG NAS2903 THRU 2920 NAS1243 THRU 1250 NAS1703 THRU 1710	1/64 (0.0156)	MAX	0.5161	0.5786	0.6411	0.7661	0.8911
		MIN	0.5151	0.5776	0.6401	0.7651	0.8901
BACB30EH NAS3003 THRU 3020 NAS1253 THRU 1260 NAS1603 THRU 1620	1/32 (0.0312)	MAX	0.5317	0.5942	0.6567	0.7817	0.9067
		MIN	0.5307	0.5932	0.6557	0.7807	0.9057
X CODE	1/64 (0.0156)	MAX	0.5161	0.5786	0.6411	0.7661	0.8911
		MIN	0.5151	0.5776	0.6401	0.7561	0.8901
Y CODE	1/32 (0.0312)	MAX	0.5317	0.5942	0.6567	0.7817	0.9067
		MIN	0.5307	0.5932	0.6557	0.7807	0.9057
BACB30TL	4/64 (0.0625)	MAX	--	--	0.6880	--	0.9380
		MIN	--	--	0.6870	--	0.9370
	5/64 (0.0781)	MAX	--	--	0.7036	--	0.9536
		MIN	--	--	0.7026	--	0.9526

HOLE SIZES FOR OVERSIZE REPLACEMENT BOLTS - CLOSE REAM HOLE (INCHES)
TABLE I [D]

Holes for Bolts
Figure 6 (Sheet 3)

BOEING PROPRIETARY - Copyright © - Unpublished Work - See title page for details.

OVERSIZE FASTENER	NOMINAL OVERSIZE	LIMIT	1 (1.0000)	1-1/8 (1.1250)	1-1/4 (1.2500)	1-3/8 (1.3750)	1-1/2 (1.5000)
CLOSE REAM HOLE							
--	INITIAL HOLE SIZE	MAX	1.0005	1.1260	1.2510	1.3760	1.5010
		MIN	0.9995	1.1245	1.2495	1.3745	1.4995
BACB30G	1/64 (0.0156)	MAX	--	--	--	1.3924	1.5174
		MIN	--	--	--	1.3909	1.5159
BACB30AC	1/64 (0.0156)	MAX	--	--	--	--	--
		MIN	--	--	--	--	--
BACB30J	1/32 (0.0312)	MAX	--	--	--	1.4079	1.5330
		MIN	--	--	--	1.4064	1.5315
BACB30AJ	1/32 (0.0312)	MAX	1.0315	1.1570	1.2820	1.4070	1.5320
		MIN	1.0305	1.1555	1.2805	1.4055	1.5305
BACB30DK	1/32 (0.0312)	MAX	1.0317	1.1572	1.2822	1.4072	1.5322
		MIN	1.0307	1.1557	1.2807	1.4057	1.5307
BACB30EG NAS2903 THRU 2920 NAS1243 THRU 1250 NAS1703 THRU 1710	1/64 (0.0156)	MAX	1.0161	1.1416	1.2666	--	--
		MIN	1.0151	1.1401	1.2651	--	--
BACB30EH NAS3003 THRU 3020 NAS1253 THRU 1260 NAS1603 THRU 1620	1/32 (0.0312)	MAX	1.0317	1.1572	1.2822	--	--
		MIN	1.0307	1.1557	1.2807	--	--
X CODE	1/64 (0.0156)	MAX	1.0161	1.1416	1.2666	1.3916	1.5166
		MIN	1.0151	1.1401	1.2651	1.3901	1.5151
Y CODE	1/32 (0.0312)	MAX	1.0317	1.1572	1.2822	1.4072	1.5322
		MIN	1.0307	1.1557	1.2807	1.4057	1.5307
BACB30TL	4/64 (0.0625)	MAX	1.0630	--	--	1.4385	--
		MIN	1.0620	--	--	1.4370	--
	5/64 (0.0781)	MAX	1.0786	--	--	1.4541	--
		MIN	1.0776	--	--	1.4526	--

HOLE SIZES FOR OVERSIZE REPLACEMENT BOLTS - CLOSE REAM HOLE (INCHES)
TABLE I D

Holes for Bolts
Figure 6 (Sheet 4)

BOEING PROPRIETARY - Copyright © - Unpublished Work - See title page for details.

OVERSIZE FASTENER	NOMINAL OVERSIZE	LIMIT	3/16 (0.1900)	1/4 (0.2500)	5/16 (0.3125)	3/8 (0.3750)	7/16 (0.4375)
CLASS I HOLE							
--	INITIAL HOLE SIZE	MAX	0.194	0.254	0.316	0.379	0.442
		MIN	0.190	0.250	0.312	0.375	0.437
BACB30G	1/64 (0.0156)	MAX	--	--	--	--	--
		MIN	--	--	--	--	--
BACB30AC	1/64 (0.0156)	MAX	--	--	--	--	--
		MIN	--	--	--	--	--
BACB30J	1/32 (0.0312)	MAX	--	--	--	--	--
		MIN	--	--	--	--	--
BACB30AJ	1/32 (0.0312)	MAX	--	0.285	0.347	0.409	0.473
		MIN	--	0.281	0.343	0.405	0.468
BACB30DK	1/32 (0.0312)	MAX	--	--	--	--	--
		MIN	--	--	--	--	--
BACB30EG NAS2903 THRU 2920 NAS1243 THRU 1250 NAS1703 THRU 1710	1/64 (0.0156)	MAX	0.207	0.270	0.332	0.395	0.458
		MIN	0.203	0.266	0.328	0.391	0.453
BACB30EH NAS3003 THRU 3020 NAS1253 THRU 1260 NAS1603 THRU 1620	1/32 (0.0312)	MAX	0.223	0.285	0.348	0.410	0.474
		MIN	0.219	0.281	0.344	0.406	0.469
X CODE	1/64 (0.0156)	MAX	0.207	0.270	0.332	0.395	0.458
		MIN	0.203	0.266	0.328	0.391	0.453
Y CODE	1/32 (0.0312)	MAX	0.223	0.285	0.348	0.410	0.473
		MIN	0.219	0.281	0.344	0.406	0.468
BACB30TL	4/64 (0.0625)	MAX	--	--	--	--	--
		MIN	--	--	--	--	--
	5/64 (0.0781)	MAX	--	--	--	--	--
		MIN	--	--	--	--	--

HOLE SIZES FOR OVERSIZE REPLACEMENT BOLTS - CLASS I HOLE (INCHES)
TABLE II D

Holes for Bolts
Figure 6 (Sheet 5)

BOEING PROPRIETARY - Copyright © - Unpublished Work - See title page for details.

OVERSIZE FASTENER	NOMINAL OVERSIZE	LIMIT	1/2 (0.5000)	9/16 (0.5625)	5/8 (0.6250)	3/4 (0.7500)	7/8 (0.8750)
CLASS I HOLE							
--	INITIAL HOLE SIZE	MAX	0.505	0.567	0.630	0.757	0.882
		MIN	0.500	0.562	0.625	0.750	0.875
BACB30G	1/64 (0.0156)	MAX	--	--	--	--	--
		MIN	--	--	--	--	--
BACB30AC	1/64 (0.0156)	MAX	--	--	--	0.774	--
		MIN	--	--	--	0.767	--
BACB30J	1/32 (0.0312)	MAX	--	--	--	--	--
		MIN	--	--	--	--	--
BACB30AJ	1/32 (0.0312)	MAX	0.536	0.598	0.661	0.785	0.913
		MIN	0.531	0.593	0.656	0.781	0.906
BACB30DK	1/32 (0.0312)	MAX	--	--	--	--	--
		MIN	--	--	--	--	--
BACB30EG NAS2903 THRU 2920 NAS1243 THRU 1250 NAS1703 THRU 1710	1/64 (0.0156)	MAX	0.521	0.583	0.646	0.773	0.898
		MIN	0.516	0.578	0.641	0.766	0.891
BACB30EH NAS3003 THRU 3020 NAS1253 THRU 1260 NAS1603 THRU 1620	1/32 (0.0312)	MAX	0.536	0.598	0.661	0.788	0.913
		MIN	0.531	0.593	0.656	0.781	0.906
X CODE	1/64 (0.0156)	MAX	0.521	0.583	0.646	0.773	0.898
		MIN	0.516	0.578	0.641	0.766	0.891
Y CODE	1/32 (0.0312)	MAX	0.536	0.598	0.661	0.788	0.913
		MIN	0.531	0.593	0.656	0.781	0.906
BACB30TL	4/64 (0.0625)	MAX	--	--	0.6925	--	0.9445
		MIN	--	--	0.6875	--	0.9375
	5/64 (0.0781)	MAX	--	--	0.7081	--	0.9601
		MIN	--	--	0.7031	--	0.9531

HOLE SIZES FOR OVERSIZE REPLACEMENT BOLTS - CLASS I HOLE (INCHES)
TABLE II [D]

Holes for Bolts
Figure 6 (Sheet 6)

BOEING PROPRIETARY - Copyright © - Unpublished Work - See title page for details.

OVERSIZE FASTENER	NOMINAL OVERSIZE	LIMIT	1 (1.0000)	1-1/8 (1.1250)	1-1/4 (1.2500)	1-3/8 (1.3750)	1-1/2 (1.5000)
CLASS I HOLE							
--	INITIAL HOLE SIZE	MAX	1.010	1.135	1.260	1.385	1.510
		MIN	1.000	1.125	1.250	1.375	1.500
BACB30G	1/64 (0.0156)	MAX	--	--	--	1.421	1.546
		MIN	--	--	--	1.391	1.516
BACB30AC	1/64 (0.0156)	MAX	--	--	--	--	--
		MIN	--	--	--	--	--
BACB30J	1/32 (0.0312)	MAX	--	--	--	1.417	1.542
		MIN	--	--	--	1.407	1.532
BACB30AJ	1/32 (0.0312)	MAX	1.041	1.166	1.291	1.416	1.541
		MIN	1.031	1.156	1.281	1.406	1.531
BACB30DK	1/32 (0.0312)	MAX	1.041	1.166	1.291	1.416	1.541
		MIN	1.031	1.156	1.281	1.406	1.531
BACB30EG NAS2903 THRU 2920 NAS1243 THRU 1250 NAS1703 THRU 1710	1/64 (0.0156)	MAX	1.025	1.150	1.275	--	--
		MIN	1.016	1.141	1.266	--	--
BACB30EH NAS3003 THRU 3020 NAS1253 THRU 1260 NAS1603 THRU 1620	1/32 (0.0312)	MAX	1.041	1.166	1.291	--	--
		MIN	1.031	1.156	1.281	--	--
X CODE	1/64 (0.0156)	MAX	1.025	1.150	1.275	1.400	1.525
		MIN	1.016	1.141	1.266	1.391	1.516
Y CODE	1/32 (0.0312)	MAX	1.041	1.166	1.291	1.416	1.541
		MIN	1.031	1.156	1.281	1.406	1.531
BACB30TL	4/64 (0.0625)	MAX	1.0725	--	--	1.4475	--
		MIN	1.0625	--	--	1.4375	--
	5/64 (0.0781)	MAX	1.0881	--	--	1.4631	--
		MIN	1.0787	--	--	1.4531	--

HOLE SIZES FOR OVERSIZE REPLACEMENT BOLTS - CLASS I HOLE (INCHES)
TABLE II [D]

Holes for Bolts
Figure 6 (Sheet 7)

BOEING PROPRIETARY - Copyright © - Unpublished Work - See title page for details.

OVERSIZE FASTENER	NOMINAL OVERSIZE	LIMIT	3/16 (0.1900)	1/4 (0.2500)	5/16 (0.3125)	3/8 (0.3750)	7/16 (0.4375)
CLASS II HOLE							
--	INITIAL HOLE SIZE	MAX	0.199	0.261	0.327	0.391	0.457
		MIN	0.190	0.250	0.313	0.375	0.438
BACB30G	1/64 (0.0156)	MAX	--	--	--	--	--
		MIN	--	--	--	--	--
BACB30AC	1/64 (0.0156)	MAX	--	--	--	--	--
		MIN	--	--	--	--	--
BACB30J	1/32 (0.0312)	MAX	--	--	--	--	--
		MIN	--	--	--	--	--
BACB30AJ	1/32 (0.0312)	MAX	--	0.292	0.357	0.422	0.488
		MIN	--	0.281	0.343	0.406	0.469
BACB30DK	1/32 (0.0312)	MAX	--	--	--	--	--
		MIN	--	--	--	--	--
X CODE	1/64 (0.0156)	MAX	0.213	0.277	0.343	0.407	0.471
		MIN	0.203	0.266	0.329	0.391	0.454
Y CODE	1/32 (0.0312)	MAX	0.228	0.292	0.358	0.420	0.486
		MIN	0.219	0.281	0.344	0.406	0.469
BACB30TL	4/64 (0.0625)	MAX	--	--	--	--	--
		MIN	--	--	--	--	--
	5/64 (0.0781)	MAX	--	--	--	--	--
		MIN	--	--	--	--	--

HOLE SIZES FOR OVERSIZE REPLACEMENT BOLTS - CLASS II HOLE (INCHES)
TABLE III D

Holes for Bolts
Figure 6 (Sheet 8)

BOEING PROPRIETARY - Copyright © - Unpublished Work - See title page for details.

OVERSIZE FASTENER	NOMINAL OVERSIZE	LIMIT	1/2 (0.5000)	9/16 (0.5625)	5/8 (0.6250)	3/4 (0.7500)	7/8 (0.8750)
CLASS II HOLE							
--	INITIAL HOLE SIZE	MAX	0.521	0.583	0.645	0.773	0.898
		MIN	0.500	0.563	0.625	0.750	0.875
BACB30G	1/64 (0.0156)	MAX	--	--	--	--	--
		MIN	--	--	--	--	--
BACB30AC	1/64 (0.0156)	MAX	--	--	--	0.790	--
		MIN	--	--	--	0.767	--
BACB30J	1/32 (0.0312)	MAX	--	--	--	--	--
		MIN	--	--	--	--	--
BACB30AJ	1/32 (0.0312)	MAX	0.552	0.614	0.676	0.804	0.926
		MIN	0.531	0.594	0.656	0.781	0.906
BACB30DK	1/32 (0.0312)	MAX	--	--	--	--	--
		MIN	--	--	--	--	--
X CODE	1/64 (0.0156)	MAX	0.537	0.599	0.661	0.789	0.914
		MIN	0.516	0.579	0.641	0.766	0.891
Y CODE	1/32 (0.0312)	MAX	0.552	0.614	0.676	0.804	0.929
		MIN	0.531	0.594	0.656	0.781	0.906
BACB30TL	4/64 (0.0625)	MAX	--	--	0.7075	--	0.9605
		MIN	--	--	0.6875	--	0.9375
	5/64 (0.0781)	MAX	--	--	0.7231	--	0.9761
		MIN	--	--	0.7031	--	0.9531

HOLE SIZES FOR OVERSIZE REPLACEMENT BOLTS - CLASS II HOLE (INCHES)
TABLE III D

Holes for Bolts
Figure 6 (Sheet 9)

BOEING PROPRIETARY - Copyright © - Unpublished Work - See title page for details.

OVERSIZE FASTENER	NOMINAL OVERSIZE	LIMIT	1 (1.0000)	1-1/8 (1.1250)	1-1/4 (1.2500)	1-3/8 (1.3750)	1-1/2 (1.5000)
CLASS II HOLE							
--	INITIAL HOLE SIZE	MAX	1.026	1.155	1.280	1.405	1.530
		MIN	1.000	1.125	1.250	1.375	1.500
BACB30G	1/64 (0.0156)	MAX	--	--	--	1.421	1.546
		MIN	--	--	--	1.391	1.516
BACB30AC	1/64 (0.0156)	MAX	--	--	--	--	--
		MIN	--	--	--	--	--
BACB30J	1/32 (0.0312)	MAX	--	--	--	1.437	1.562
		MIN	--	--	--	1.407	1.532
BACB30AJ	1/32 (0.0312)	MAX	1.057	1.186	1.311	1.437	1.561
		MIN	1.031	1.156	1.281	1.406	1.531
BACB30DK	1/32 (0.0312)	MAX	1.057	1.186	1.311	1.436	1.561
		MIN	1.031	1.156	1.281	1.406	1.531
X CODE	1/64 (0.0156)	MAX	1.042	1.173	1.296	1.421	1.546
		MIN	1.016	1.141	1.266	1.391	1.516
Y CODE	1/32 (0.0312)	MAX	1.057	1.186	1.311	1.436	1.561
		MIN	1.031	1.156	1.281	1.406	1.531
BACB30TL	4/64 (0.0625)	MAX	1.0885	--	1.4675	--	--
		MIN	1.0625	--	1.4375	--	--
	5/64 (0.0781)	MAX	1.1041	--	1.4831	--	--
		MIN	1.0781	--	1.4531	--	--

HOLE SIZES FOR OVERSIZE REPLACEMENT BOLTS - CLASS II HOLE (INCHES)
TABLE III D

OVERSIZE FASTENER	NOMINAL OVERSIZE	LIMIT	3/4 (0.7500)	7/8 (0.8750)	1 (1.0000)	1-1/8 (1.1250)	1-1/4 (1.2500)	1-3/8 (1.3750)	1-1/2 (1.5000)
CLASS III HOLE									
--	INITIAL HOLE SIZE	MAX	0.797	0.922	1.047	1.172	1.297	1.422	1.547
		MIN	0.778	0.903	1.028	1.153	1.278	1.403	1.528
BACB30G	1/64 (0.0156)	MAX	--	--	--	--	--	1.438	1.563
		MIN	--	--	--	--	--	1.419	1.544
BACB30AC	1/64 (0.0156)	MAX	0.814	--	--	--	--	--	--
		MIN	0.795	--	--	--	--	--	--
BACB30J	1/32 (0.0312)	MAX	--	--	--	--	--	1.454	1.560
		MIN	--	--	--	--	--	1.435	1.479

HOLE SIZES FOR OVERSIZE REPLACEMENT BOLTS - CLASS III HOLE (INCHES)
TABLE IV D

Holes for Bolts
Figure 6 (Sheet 10)

BOEING PROPRIETARY - Copyright © - Unpublished Work - See title page for details.

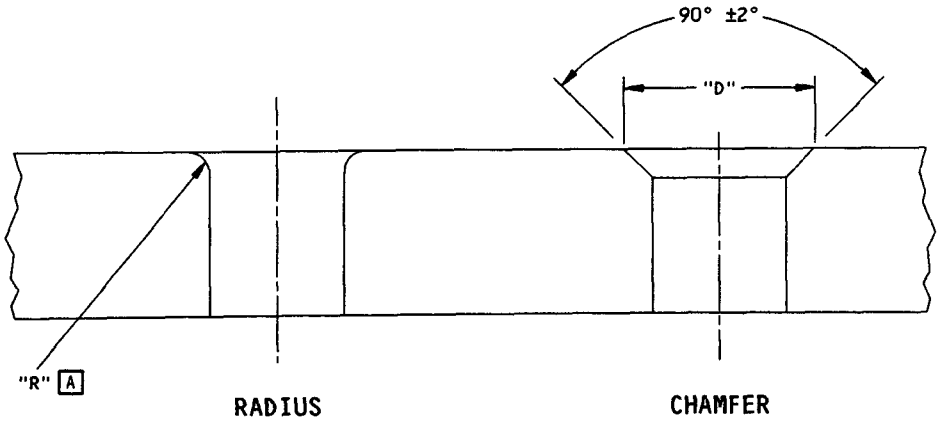

DETAIL I

NOMINAL FASTENER DIAMETER	BACB30FD, BACB30LE, BACB30MR, BACB30MT, BACB30NH, BACB30PN, BACB30TR, BACB30UG, BACB30US, BACB30XL MS21250		ALL OTHER PROTRUDING HEAD BOLTS	
	"R" B RADIUS	"D" C CHAMFER DIA	"R" B RADIUS	"D" C CHAMFER DIA
3/16	0.041-0.051	0.272-0.292	0.020-0.030	0.230-0.250
1/4	0.041-0.051	0.332-0.352	0.020-0.030	0.290-0.310
5/16	0.041-0.051	0.394-0.414	0.020-0.030	0.352-0.372
3/8	0.057-0.067	0.489-0.509	0.025-0.035	0.425-0.445
7/16	0.057-0.067	0.551-0.571	0.025-0.035	0.487-0.507
1/2	0.057-0.067	0.614-0.634	0.030-0.040	0.560-0.580
9/16	0.057-0.067	0.676-0.696	0.035-0.045	0.632-0.652
5/8	0.073-0.083	0.771-0.791	0.040-0.050	0.705-0.725
3/4	0.073-0.083	0.896-0.916	0.045-0.055	0.840-0.860
7/8	0.073-0.083	1.021-1.041	0.050-0.060	0.975-0.995
1	0.073-0.083	1.146-1.166	0.060-0.070	1.120-1.140
1 1/8	0.073-0.083	1.271-1.291	0.070-0.080	1.265-1.285
1 1/4	0.089-0.099	1.428-1.448	0.075-0.085	1.400-1.420
1 3/8	0.089-0.099	1.553-1.573	--	--
1 1/2	0.089-0.099	1.678-1.698	--	--
1 3/4	0.089-0.099	1.928-1.948	--	--

FILLET RELIEF LIMITS FOR PROTRUDING HEAD STRAIGHT SHANK BOLT HOLES WHEN A COUNTERSINK WASHER IS NOT USED UNDER THE BOLT HEAD
TABLE V

Holes for Bolts
Figure 6 (Sheet 11)

BOEING PROPRIETARY - Copyright © - Unpublished Work - See title page for details.

NOMINAL RIVET DIAMETER	FINISHED HOLE DIAMETER
0.125 (1/8)	0.127 +0.003 -0.000
0.156 (5/32)	0.159 +0.003 -0.000
0.1875 (3/16)	0.190 +0.003 -0.000
0.219 (7/32)	0.222 +0.003 -0.000
0.250 (1/4)	0.253 +0.003 -0.000
0.281 (9/32)	0.285 +0.003 -0.000
0.3125 (5/16)	0.315 +0.003 -0.000
0.344 (11/32)	0.348 +0.003 -0.000
0.3750 (3/8)	0.378 +0.003 -0.000
0.406 (13/32)	0.411 +0.003 -0.000
0.4375 (7/16)	0.441 +0.003 -0.000

HOLE SIZES FOR FLUID-TIGHT RIVETS
TABLE I

NOTES

- THE SOURCE OF INFORMATION FOR THIS FIGURE CAN BE FOUND IN BOEING PROCESS SPECIFICATION BAC5047.
- HOLE DIAMETERS IN THIS FIGURE CAN BE USED UNLESS AN APPLICABLE ENGINEER DRAWING SHOWS DIFFERENTLY.
- HOLES AND COUNTERSINKS MUST BE 90 DEGREES TO THE PART SURFACE, ±2 DEGREES.

Fluid Tight Fastener Holes
Figure 7

BOEING PROPRIETARY - Copyright © - Unpublished Work - See title page for details.

NOTES

- THE SOURCE OF INFORMATION FOR THIS FIGURE CAN BE FOUND IN BOEING PROCESS SPECIFICATION BAC5060.
- HOLE DIAMETERS IN THIS FIGURE CAN BE USED UNLESS AN APPLICABLE ENGINEER DRAWING SHOWS DIFFERENTLY.
- SEE DETAIL I AND TABLE VI FOR FINISHED HOLE SPECIFICATIONS FOR PROTRUDING HEAD FASTENERS. REFER TO 51-30-8 FOR EQUIVALENT COUNTERSINK FASTENER SPECIFICATIONS.
- SEE TABLES I AND II FOR BACB30PT BOLTS. SEE TABLES III THRU V FOR BACB30WQ AND BACB30WR BOLTS.

[A] IT IS NOT NECESSARY TO COLD WORK A HOLE FOR A FIRST OVERSIZE BOLT IF THE INITIAL HOLE WAS A CLASS I, HIGH INTERFERENCE, (SLEEVE OR SLEEVELESS) COLD WORKED HOLE. BUT IF THE INITIAL HOLE WAS A 1/64 INCH UNDERSIZE, CLASS I, SLEEVE, HIGH INTERFERENCE, COLD WORKED HOLE, THEN A HOLE FOR A FIRST OVERSIZE BOLT MUST BE COLD WORKED AGAIN. REFER TO SRM 51-30-9 FOR SLEEVE AND SLEEVELESS COLD WORKING PROCEDURES.

[B] COLD WORK THE HOLE AS A CLASS I, HIGH INTERFERENCE HOLE, AS SPECIFIED IN SRM 51-30-9.

[C] HOLES FOR FIRST AND SECOND OVERSIZE FASTENERS MUST HAVE THE SAME BOLT INTERFERENCE AS SPECIFIED FOR THE INITIAL HOLE.

[D] ADD 0.0096 TO BOTH THE MINIMUM AND MAXIMUM CHAMFER DIAMETERS FOR FIRST OVERSIZE BOLTS. ADD 0.0252 INCH TO BOTH THE MINIMUM AND MAXIMUM CHAMFER DIAMETERS FOR SECOND OVERSIZE BOLTS.

[E] IF COLD WORKING IS NECESSARY FOR AN OVERSIZE HOLE, THEN USE THE MANDREL-TO-HOLE INTERFERENCE AS SPECIFIED IN THE ENGINEER DRAWING.

NOMINAL THREAD SIZE	BOLT PART NUMBER	HOLE DIAMETER	
		MINIMUM	MAXIMUM
WING UPPER SURFACE			
0.2500-28	BACB30PT	0.2520	0.2540
0.3125-24		0.3145	0.3165
0.3750-24		0.3770	0.3790
WING LOWER SURFACE			
0.2500-28	BACB30PT	0.2510	0.2530
0.3125-24		0.3135	0.3155
0.3750-24		0.3760	0.3780

STANDARD HOLE SIZES FOR BACB30PT 70 DEGREE RADIUS LEAD-IN BOLTS
TABLE I

Holes for Radius Lead-In Bolts
Figure 8 (Sheet 1)

BOEING PROPRIETARY - Copyright © - Unpublished Work - See title page for details.

NOMINAL THREAD SIZE	FIRST OVERSIZE HOLE DIAMETER		SECOND OVERSIZE HOLE DIAMETER	
	MINIMUM	MAXIMUM	MINIMUM	MAXIMUM
WING UPPER SURFACE				
0.2500-28	0.2616	0.2636	0.2772	0.2792
0.3125-24	0.3241	0.3261	0.3397	0.3417
0.3750-24	0.3866	0.3886	0.4022	0.4042
WING LOWER SURFACE				
0.2500-28	0.2591	0.2616	0.2747	0.2772
0.3125-24	0.3216	0.3241	0.3372	0.3397
0.3750-24	0.3841	0.3866	0.3997	0.4022

OVERSIZE HOLE DIMENSIONS FOR BACB30PT
70 DEGREE RADIUS LEAD-IN BOLTS
TABLE II

NOMINAL THREAD SIZE	BOLT PART NUMBER	HOLE DIAMETER		COLD WORKED HOLE DIAMETER	
		MINIMUM	MAXIMUM	MINIMUM	MAXIMUM
WING UPPER SURFACE AND UPPER CHORD TO WEB					
0.1900-32	BACB30WQ AND BACB30WR	0.1928	0.1948	0.1933	0.1953
0.2500-28		0.2526	0.2546	0.2531	0.2551
0.3125-24		0.3151	0.3171	0.3156	0.3176
0.3750-24		0.3776	0.3796	0.3781	0.3801
0.4375-20		0.4401	0.4421	0.4406	0.4426
WING LOWER SURFACE AND LOWER CHORD TO WEB					
0.1900-32	BACB30WQ AND BACB30WR	0.1913	0.1933	0.1933	0.1953
0.2500-28		0.2511	0.2531	0.2531	0.2551
0.3125-24		0.3136	0.3156	0.3156	0.3176
0.3750-24		0.3761	0.3781	0.3781	0.3801
0.4375-20		0.4386	0.4406	0.4406	0.4426

STANDARD HOLE SIZES FOR BACB30WQ AND
BACB30WR 100 DEGREE RADIUS LEAD-IN BOLTS
TABLE III

Holes for Radius Lead-In Bolts
Figure 8 (Sheet 2)

BOEING PROPRIETARY - Copyright © - Unpublished Work - See title page for details.

NOMINAL THREAD SIZE	FIRST OVERSIZE HOLE DIAMETER [A]		SECOND OVERSIZE HOLE DIAMETER [B]	
	MINIMUM	MAXIMUM	MINIMUM	MAXIMUM
WING UPPER SURFACE AND UPPER CHORD TO WEB				
0.1900-32	0.2029	0.2049	0.2185	0.2205
0.2500-28	0.2627	0.2647	0.2783	0.2803
0.3125-24	0.3252	0.3272	0.3408	0.3428
0.3750-24	0.3877	0.3897	0.4033	0.4053
0.4375-20	0.4502	0.4522	0.4658	0.4678
WING LOWER SURFACE AND LOWER CHORD TO WEB				
0.1900-32	0.2029	0.2049	0.2185	0.2205
0.2500-28	0.2627	0.2647	0.2783	0.2803
0.3125-24	0.3252	0.3272	0.3408	0.3428
0.3750-24	0.3877	0.3897	0.4033	0.4053
0.4375-20	0.4502	0.4522	0.4658	0.4678

OVERSIZE HOLE DIMENSIONS FOR BACB30WQ AND BACB30WR
100 DEGREE RADIUS LEAD-IN BOLTS IN COLD WORKED HOLES
TABLE IV [E]

Holes for Radius Lead-In Bolts
Figure 8 (Sheet 3)

BOEING PROPRIETARY - Copyright © - Unpublished Work - See title page for details.

BOEING STANDARD NUMBER	BOLT INTERFACE	INITIAL OVERSIZE HOLE DIAMETER		FIRST OVERSIZE HOLE DIAMETER [C]		SECOND OVERSIZE HOLE DIAMETER [C]	
		MINIMUM	MAXIMUM	MINIMUM	MAXIMUM	MINIMUM	MAXIMUM
3	0.0005 TO 0.0035	0.1925	0.1948	0.2021	0.2044	0.2177	0.2200
	0.0010 TO 0.0035	0.1925	0.1943	0.2021	0.2039	0.2177	0.2195
	0.0010 TO 0.0040	0.1920	0.1943	0.2016	0.2039	0.2172	0.2195
	0.0020 TO 0.0050	0.1910	0.1933	0.2006	0.2029	0.2162	0.2185
4	0.0005 TO 0.0035	0.2525	0.2546	0.2621	0.2642	0.2777	0.2798
	0.0010 TO 0.0035	0.2525	0.2541	0.2621	0.2637	0.2777	0.2793
	0.0010 TO 0.0040	0.2520	0.2541	0.2616	0.2637	0.2772	0.2793
	0.0020 TO 0.0050	0.2510	0.2531	0.2606	0.2627	0.2762	0.2783
5	0.0005 TO 0.0035	0.3150	0.3171	0.3246	0.3267	0.3402	0.3423
	0.0010 TO 0.0035	0.3150	0.3166	0.3246	0.3262	0.3402	0.3418
	0.0010 TO 0.0040	0.3145	0.3166	0.3241	0.3262	0.3397	0.3418
	0.0020 TO 0.0050	0.3135	0.3156	0.3231	0.3252	0.3387	0.3408
6	0.0005 TO 0.0035	0.3775	0.3796	0.3871	0.3892	0.4027	0.4048
	0.0010 TO 0.0035	0.3775	0.3791	0.3871	0.3887	0.4027	0.4043
	0.0010 TO 0.0040	0.3770	0.3791	0.3866	0.3887	0.4022	0.4043
	0.0020 TO 0.0050	0.3760	0.3781	0.3856	0.3877	0.4012	0.4033
7	0.0005 TO 0.0035	0.4400	0.4421	0.4487	0.4517	0.4652	0.4673
	0.0010 TO 0.0035	0.4400	0.4416	0.4487	0.4512	0.4652	0.4668
	0.0010 TO 0.0040	0.4395	0.4416	0.4482	0.4512	0.4647	0.4668
	0.0020 TO 0.0050	0.4385	0.4406	0.4472	0.4502	0.4637	0.4658
8	0.0005 TO 0.0035	0.5020	0.5041	0.5107	0.5137	0.5272	0.5293
	0.0010 TO 0.0035	0.5020	0.5036	0.5107	0.5132	0.5272	0.5288
	0.0010 TO 0.0040	0.5015	0.5036	0.5102	0.5132	0.5267	0.5288
	0.0020 TO 0.0050	0.5005	0.5026	0.5092	0.5122	0.5257	0.5278

OVERSIZE HOLE DIMENSIONS FOR BACB30WQ AND BACB30WR 100 DEGREE RADIUS LEAD-IN BOLTS IN NON COLD WORKED HOLES
TABLE V

Holes for Radius Lead-In Bolts
Figure 8 (Sheet 4)

BOEING PROPRIETARY - Copyright © - Unpublished Work - See title page for details.

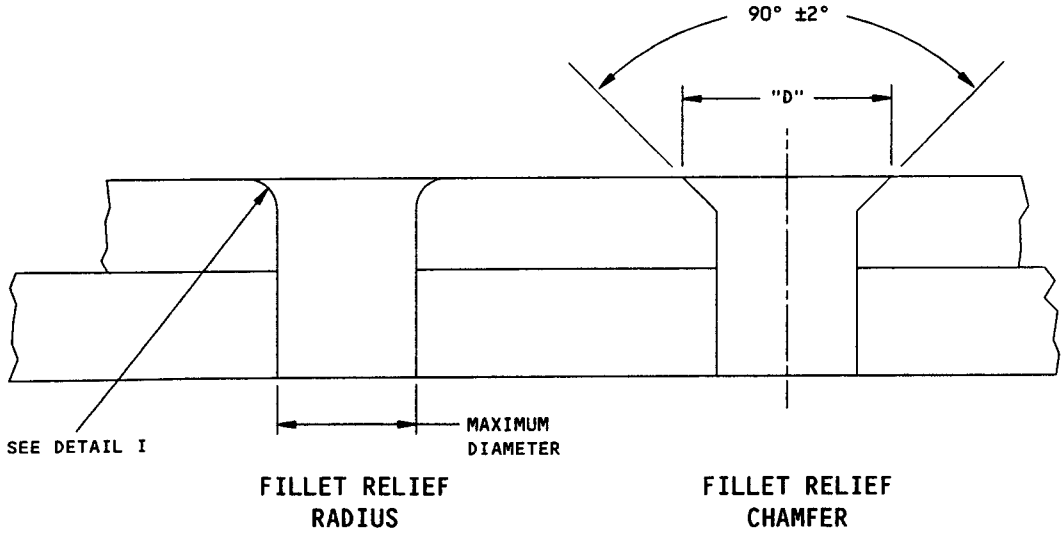

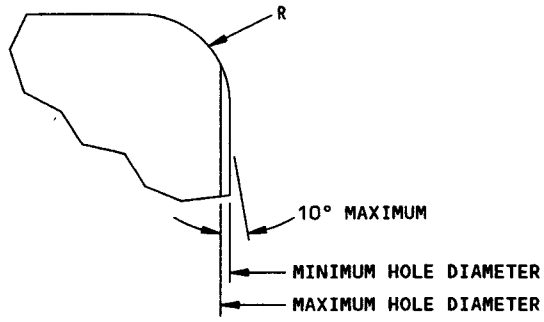

DETAIL I

NOMINAL THREAD SIZE	PROTRUDING HEAD				
	"R" RADIUS		"D" CHAMFER DIA [D]		MIN SHEET THICKNESS TO BE CHAMFERED OR RADIUSED
	MIN	MAX	MIN	MAX	
0.1900-32	0.015	0.025	0.226	0.236	0.060
0.2500-28	0.015	0.025	0.286	0.296	0.060
0.3125-24	0.020	0.030	0.358	0.368	0.060
0.3750-24	0.020	0.030	0.421	0.431	0.060
0.4375-20	0.020	0.030	0.483	0.493	0.080

FILLET RELIEF LIMITS FOR PROTRUDING HEAD RADIUS LEAD-IN BOLT HOLES
TABLE VI

Holes for Radius Lead-In Bolts
Figure 8 (Sheet 5)

BOEING PROPRIETARY - Copyright © - Unpublished Work - See title page for details.

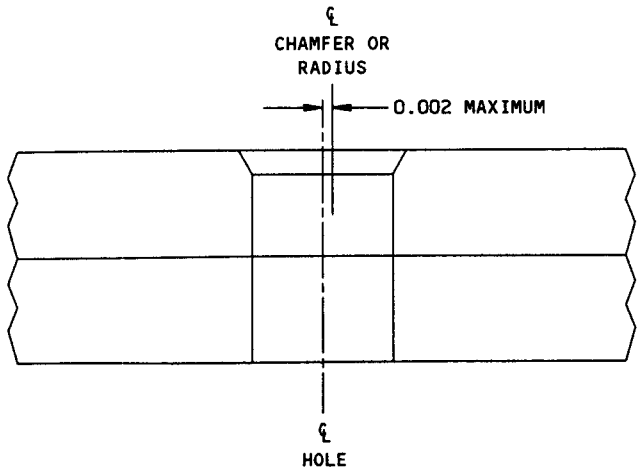

CONCENTRICITY SPECIFICATION
DETAIL II

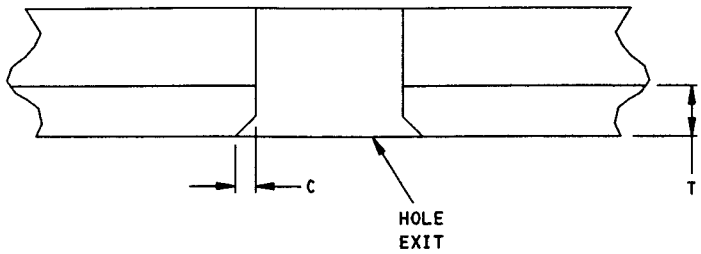

THICKNESS T	RADIUS OR CHAMFER C AT HOLE EXIT
UP TO 0.091	0.005
OVER 0.091	0.010

DEBURR SPECIFICATION
DETAIL III

Holes for Radius Lead-In Bolts
Figure 8 (Sheet 6)

BOEING PROPRIETARY - Copyright © - Unpublished Work - See title page for details.

SUBJECT	TABLE
SOLID ALUMINUM RIVETS	I
NON-ALUMINUM RIVETS	II
BLIND RIVETS	III
SEMI-TUBULAR AND HOLLOW ENDED RIVETS	IV
BOLTS	V AND VI
LOCKBOLTS AND HEX-DRIVE FASTENERS	VII AND VIII
BLIND BOLTS	IX, X, AND XI

INDEX FOR FIGURE 9

NOTES

- THE SOURCE OF INFORMATION FOR THIS FIGURE CAN BE FOUND IN BOEING PROCESS SPECIFICATION BAC5063.
- HOLE DIAMETERS IN THIS FIGURE CAN BE USED UNLESS AN APPLICABLE ENGINEER DRAWING SHOWS DIFFERENTLY.
- REFER TO SRM 51-10-7 FOR MORE INFORMATION ON HOLE SPECIFICATIONS.
- HOLES AND COUNTERSINKS MUST BE 90° TO THE PART SURFACE, ±2°.

[A] DO NOT USE ALUMINUM FASTENERS IN COMPOSITE STRUCTURE THAT HAS CARBON FIBER (GRAPHITE) MATERIAL UNLESS ALLOWED BY THE ENGINEER DRAWING. CARBON MATERIAL CAN CAUSE ALUMINUM FASTENERS TO CORRODE.

[B] THIS TABLE DOES NOT APPLY TO NICKEL ALLOY MS16535 RIVETS. SEE TABLE II FOR NICKEL ALLOY MS16535 RIVETS.

[C] INFORMATION IN THIS TABLE APPLIES TO THE BOLTS THAT FOLLOW:

- BACB30VK
- BACB30VL
- BACB30XS
- PLT1055
- PLT1058
- PLT1064
- PLT1069
- PLT1070
- PLT220
- PLT221
- PLT270
- PLT271
- MS21140
- MS21141

Fastener Hole Sizes in Composites
Figure 9 (Sheet 1)

BOEING PROPRIETARY - Copyright © - Unpublished Work - See title page for details.

RIVET TYPE [A]	NOMINAL RIVET DIA (INCH)	HOLE SIZE (INCH)					
		ARAMID/EPOXY TAPE OR FABRIC		ARAMID/EPOXY WITH ALUMINUM OR FIBERGLASS WITH AND WITHOUT ALUMINUM		THERMOPLASTIC	
		MIN	MAX	MIN	MAX	MIN	MAX
BACR15CE, BACR15GF	3/32	0.098	0.103	0.098	0.103	0.098	0.103
	1/8	0.130	0.137	0.130	0.135	0.128	0.134
	5/32	0.161	0.169	0.159	0.167	0.159	0.165
	3/16	0.192	0.200	0.192	0.198	0.190	0.196
	1/4	0.255	0.261	0.255	0.261	0.255	0.261
BACR15BA, BACR15BB, BACR15FT	3/32	0.098	0.103	0.098	0.103	0.098	0.103
	1/8	0.130	0.137	0.128	0.135	0.128	0.135
	5/32	0.161	0.173	0.159	0.171	0.159	0.165
	3/16	0.193	0.204	0.191	0.202	0.191	0.202
	1/4	0.254	0.265	0.254	0.265	0.254	0.265

HOLE SIZES FOR SOLID ALUMINUM RIVETS
TABLE I

RIVET TYPE [A]	NOMINAL RIVET DIA (INCH)	HOLE SIZE (INCH)					
		CARBON FIBER/ EPOXY (CFRP) TAPE OR FABRIC		ARAMID/EPOXY FABRIC		ARAMID/EPOXY WITH ALUMINUM OR FIBERGLASS WITH AND WITHOUT ALUMINUM	
		MIN	MAX	MIN	MAX	MIN	MAX
MS16535 (NICKEL ALLOY, SEMI-TUBULAR)	3/32	0.091	0.095	0.093	0.098	0.091	0.095
	1/8	0.125	0.129	0.127	0.132	0.125	0.129
	5/32	0.148	0.152	0.150	0.155	0.148	0.152
	3/16	0.191	0.195	0.192	0.197	0.190	0.195
CSR903B	3/32	0.098	0.102	—	—	—	—
	1/8	0.129	0.133				
	5/32	0.159	0.163				
	3/16	0.191	0.195				

HOLE SIZES FOR NON-ALUMINUM RIVETS
TABLE II

Fastener Hole Sizes in Composites
Figure 9 (Sheet 2)

BOEING PROPRIETARY - Copyright © - Unpublished Work - See title page for details.

RIVET TYPE	NOMINAL FASTENER DIAMETER	HOLE SIZE (INCH)	
		MINIMUM	MAXIMUM
BACR15DA, BACR15DR, BACR15GE, NAS1398, NAS1399	3/32	0.098	0.101
	1/8	0.129	0.132
	5/32	0.160	0.164
	3/16	0.192	0.196
BACR15FR, BACR15FP,	1/8	0.143	0.146
	5/32	0.176	0.180
	3/16	0.205	0.209

HOLE SIZES FOR BLIND RIVETS
TABLE III

NOMINAL FASTENER DIAMETER	HOLE SIZE (INCH)	
	MINIMUM	MAXIMUM
5/32	0.159	0.162
3/16	0.190	0.193
7/32	0.224	0.227

HOLE SIZES FOR SEMI-TUBULAR MS16535[B]
AND HOLLOW-ENDED BACR15GA RIVETS
TABLE IV

Fastener Hole Sizes in Composites
Figure 9 (Sheet 3)

BOEING PROPRIETARY - Copyright © - Unpublished Work - See title page for details.

NOMINAL FASTENER DIAMETER	HOLE SIZE (INCH)	
	MINIMUM	MAXIMUM
3/32	0.114	0.117
1/8	0.140	0.143
5/32	0.164	0.167
3/16	0.190	0.193
1/4	0.250	0.253
5/16	0.312	0.315
3/8	0.375	0.378
7/16	0.437	0.440
1/2	0.500	0.503
9/16	0.562	0.565
5/8	0.625	0.628
3/4	0.750	0.753
7/8	0.875	0.878
1	1.000	1.003

HOLE SIZES FOR BOLTS (REMOVABLE FASTENERS)
TABLE V

NOMINAL FASTENER DIAMETER	FIRST OVERSIZE		SECOND OVERSIZE	
	MIN	MAX	MIN	MAX
3/32	--	--	0.140	0.143
1/8	--	--	0.164	0.167
5/32	--	--	0.190	0.193
3/16	0.203	0.206	0.219	0.222
1/4	0.266	0.269	0.281	0.284
5/16	0.328	0.331	0.344	0.347
3/8	0.390	0.394	0.406	0.409
7/16	0.453	0.456	0.468	0.471
1/2	0.516	0.519	0.531	0.534
9/16	0.578	0.581	0.593	0.596
5/8	0.641	0.644	0.656	0.659
3/4	0.766	0.769	0.781	0.784
7/8	0.891	0.894	0.906	0.909
1	1.016	1.019	1.031	1.034

HOLE SIZES (INCH) FOR OVERSIZE (REMOVABLE FASTENERS) BOLTS
TABLE VI

Fastener Hole Sizes in Composites
Figure 9 (Sheet 4)

BOEING PROPRIETARY - Copyright © - Unpublished Work - See title page for details.

NOMINAL FASTENER DIAMETER	HOLE SIZE (INCH)	
	MINIMUM	MAXIMUM
5/32	0.164	0.167
3/16	0.190	0.193
1/4	0.250	0.253
5/16	0.312	0.315
3/8	0.375	0.378
7/16	0.437	0.440
1/2	0.500	0.503
9/16	0.562	0.565
5/8	0.625	0.628
3/4	0.750	0.753

HOLE SIZES FOR LOCKBOLTS AND HEX-DRIVE FASTENERS
TABLE VII

NOMINAL FASTENER DIAMETER	FIRST OVERSIZE		SECOND OVERSIZE	
	MIN	MAX	MIN	MAX
5/32	--	--	0.190	0.193
3/16	0.203	0.206	0.218	0.221
1/4	0.265	0.268	0.281	0.284
5/16	0.328	0.331	0.343	0.346
3/8	0.390	0.393	0.406	0.409
7/16	0.453	0.456	0.468	0.471
1/2	0.515	0.518	0.531	0.534
9/16	0.577	0.580	0.593	0.596
5/8	0.640	0.643	0.655	0.658
3/4	0.765	0.768	0.780	0.783
7/8	0.890	0.893	0.905	0.908
1	1.015	1.018	1.030	1.033

OVERSIZE HOLE SIZES FOR LOCKBOLTS AND HEX-DRIVE FASTENERS
TABLE VIII

Fastener Hole Sizes in Composites
Figure 9 (Sheet 5)

BOEING PROPRIETARY - Copyright © - Unpublished Work - See title page for details.

NOMINAL FASTENER DIAMETER	HOLE SIZE (INCH)	
	MINIMUM	MAXIMUM
5/32	0.1655	0.1680
3/16	0.1995	0.2020
1/4	0.2605	0.2630
5/16	0.3125	0.3150
3/8	0.3755	0.3780

HOLE SIZES FOR BLIND BOLTS
TABLE IX

OVERSIZE REPLACEMENT FASTENER		LIMITS	INITIAL NOMINAL FASTENER DIAMETER		
			-5 (5/32)	-6 (3/16)	-8 (1/4)
			INITIAL HOLE SIZE (INCH)		
		MIN	0.1655	0.1995	0.2605
		MAX	0.1680	0.2020	0.2630
		--	HOLE SIZES FOR OVERSIZE REPLACEMENT FASTENERS		
1/64	PLT221 PLT271 PLT1064	MIN	--	0.2160	0.2770
		MAX	--	0.2180	0.2790
1/32	PLT1069 PLT1055 PLT1070	MIN	--	0.2310	0.2920
		MAX	--	0.2330	0.2940
1/32	BACB30VL BACB30VK BACB30XS	MIN	0.1995	0.2285	0.2905
		MAX	0.2020	0.2310	0.2930

HOLE SIZES (INCH) FOR OVERSIZE BLIND BOLTS EXCEPT MS21140 AND MS21141
TABLE X

Fastener Hole Sizes in Composites
Figure 9 (Sheet 6)

BOEING PROPRIETARY - Copyright © - Unpublished Work - See title page for details.

OVERSIZE REPLACEMENT FASTENER			LIMITS	INITIAL NOMINAL FASTENER DIAMETER				
				5/32	3/16	1/4	5/16	3/8
				INITIAL HOLE SIZE (INCH)				
			MIN	0.164	0.199	0.260	0.312	0.374
			MAX	0.167	0.202	0.263	0.315	0.377
			--	HOLE SIZES FOR OVERSIZE REPLACEMENT FASTENERS				
1/64	BACB30VJ()C() BACB30VJ()CD() BACB30VH()C() BACB30VH()CD()	OB100-EU()() OB100-EU()()CD OBP-EU()() OBP-EU()()CD	MIN	0.180	0.215	0.276	0.328	0.390
			MAX	0.183	0.218	0.279	0.331	0.393

OVERSIZE FASTENERS AND HOLE SIZES FOR MS21140 AND MS21141 BLIND BOLTS
TABLE XI

Fastener Hole Sizes in Composites
Figure 9 (Sheet 7)

BOEING PROPRIETARY - Copyright © - Unpublished Work - See title page for details.

FASTENER EDGE MARGIN

1. General

A. Fastener edge margin as used in this manual is the distance from the center of the hole to the nearest edge of a sheet. Refer to Figure 1.

B. Examples of joints in single shear and double shear are shown in Figure 2.

C. Minimum fastener edge margins for metal structural applications are tabulated in Figure 3 as follows:

Table I - Edge margins for aluminum alloy protruding head rivets in aluminum alloys
Table II - Edge margins for aluminum alloy flush head rivets in aluminum alloys
Table III - Edge margins for nickel-copper alloy rivets in steel alloys
Table IV - Edge margins for:
- Protruding head bolts and screws
- Tension protruding head lockbolts and hex-drive bolts

Table V - Edge margins for:
- 100 degree head bolts, screws, lockbolts and hex-drive bolts
- Shear protruding head lockbolts and hex-drive bolts
- Protruding and flush head blind fasteners

D. Edge margins for fastener diameters between those shown in the fastener edge margin tables can be interpolated from the data in those tables.

E. Minimum fastener edge margins for composite structural applications can be generally represented by the formula 3.0 D + 0.05 inches where "D" is the fastener diameter.

F. See SRM 51-40-05 for fastener hole sizes in metal structures.

BOEING PROPRIETARY - Copyright © - Unpublished Work - See title page for details.

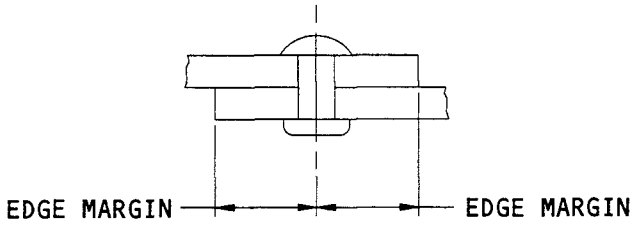

DETAIL I

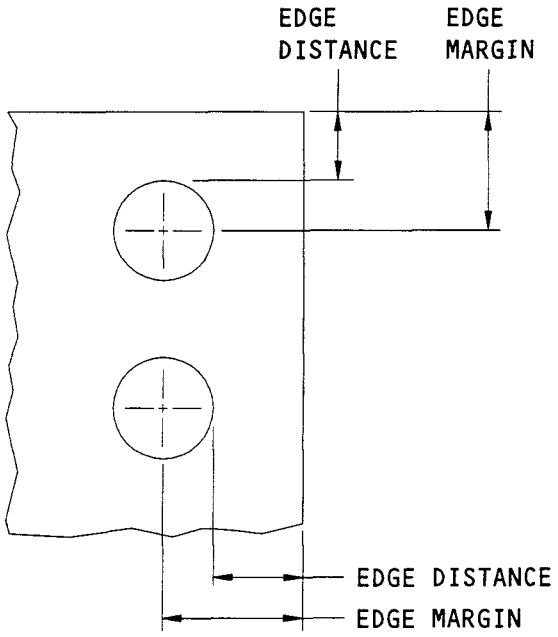

DETAIL II

Fastener Edge Margin and Edge Distance
Figure 1

BOEING PROPRIETARY - Copyright © - Unpublished Work - See title page for details.

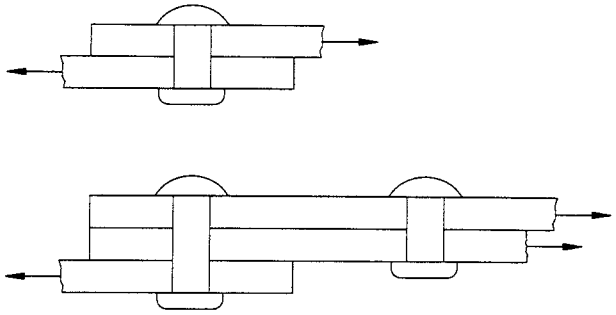

SINGLE SHEAR EDGE MARGIN
DETAIL I

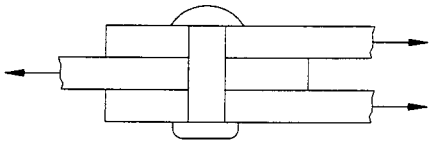

DOUBLE SHEAR EDGE MARGIN
DETAIL II

Joint Examples
Figure 2

BOEING PROPRIETARY - Copyright © - Unpublished Work - See title page for details.

HEAD STYLE		ALUMINUM ALLOY PROTRUDING HEAD RIVETS													
LOADING		SINGLE SHEAR							DOUBLE SHEAR						
RIVETED MATERIAL		RIVET DIAMETERS													
ALLOY	GAGE	3/32	1/8	5/32	3/16	1/4	5/16	3/8	3/32	1/8	5/32	3/16	1/4	5/16	3/8
		EDGE MARGIN (± 0.05)													
ALL ALUMINUM ALLOYS EXCEPT CASTINGS	0.012	0.21							0.21	0.27	0.32				
	0.016	0.21	0.27						0.21	0.27	0.32				
	0.018	0.21	0.27						0.21	0.27	0.32				
	0.020	0.21	0.27	0.32					0.21	0.27	0.32				
	0.022	0.21	0.27	0.32					0.21	0.27	0.32				
	0.025	0.21	0.27	0.32					0.21	0.27	0.32				
	0.028	0.21	0.27	0.32					0.21	0.27	0.32				
	0.032	0.20	0.27	0.32	0.37				0.21	0.27	0.32				
	0.036	0.19	0.26	0.32	0.37				0.21	0.27	0.32				
	0.040	0.18	0.26	0.32	0.37	0.48			0.21	0.27	0.32	0.37	0.48		
	0.045	0.17	0.24	0.32	0.37	0.48			0.21	0.27	0.32	0.37	0.48		
	0.050	0.17	0.23	0.32	0.37	0.48	0.58		0.21	0.27	0.32	0.37	0.48		
	0.056	0.17	0.22	0.29	0.37	0.48	0.58		0.21	0.27	0.32	0.37	0.48	0.58	
	0.063	0.17	0.21	0.28	0.36	0.48	0.58	0.69	0.20	0.27	0.32	0.37	0.48	0.58	0.69
	0.071		0.21	0.26	0.33	0.48	0.58	0.69		0.27	0.32	0.37	0.48	0.58	0.69
	0.080		0.21	0.25	0.31	0.47	0.58	0.69		0.26	0.32	0.37	0.48	0.58	0.69
	0.090		0.21	0.25	0.29	0.44	0.58	0.69		0.25	0.32	0.37	0.48	0.58	0.69
	0.100		0.21	0.25	0.29	0.41	0.58	0.69		0.23	0.31	0.37	0.48	0.58	0.69
	0.112			0.25	0.29	0.39	0.54	0.69			0.29	0.37	0.48	0.58	0.69
	0.125			0.25	0.29	0.37	0.50	0.67			0.28	0.36	0.48	0.58	0.69
	0.140			0.25	0.29	0.37	0.47	0.62			0.26	0.33	0.48	0.58	0.69
	0.160			0.25	0.29	0.37	0.46	0.57			0.24	0.31	0.47	0.58	0.69
	0.180				0.29	0.37	0.46	0.54				0.29	0.44	0.58	0.69
	0.190				0.29	0.37	0.46	0.54				0.29	0.43	0.58	0.69
	0.200				0.29	0.37	0.46	0.54				0.29	0.41	0.58	0.69
	0.224				0.29	0.37	0.46	0.54				0.29	0.39	0.54	0.68
	0.250				0.29	0.37	0.46	0.54				0.29	0.37	0.50	0.67
ADD FOR CASTINGS		0.10			0.20			0.30	0.10			0.20			0.30

TABLE I

Fastener Edge Margins
Figure 3 (Sheet 1)

BOEING PROPRIETARY - Copyright © - Unpublished Work - See title page for details.

HEAD STYLE		100° HEAD AND 120° MODIFIED HEAD				
LOADING		SINGLE SHEAR				
RIVETED MATERIAL		ALUMINUM RIVET DIAMETER				
ALLOY	GAGE	1/8	5/32	3/16	1/4	5/16
ALUMINUM ALLOY EXCEPT CASTINGS	ALL	EDGE MARGIN (± 0.05)				
		0.31	0.37	0.43	0.55	0.67
ADD FOR CASTINGS		0.10		0.20		

TABLE II

HEAD STYLE		PROTRUDING HEAD					100° HEAD		
LOADING		SINGLE SHEAR							
RIVETED MATERIAL		NICKEL-COPPER RIVET DIAMETERS							
ALLOY	GAGE	3/32	1/8	5/32	3/16	1/4	1/8	5/32	3/16
		EDGE MARGINS (± 0.05)							
CORROSION RESISTANT STEEL SHEET, AISI 301 AND 302	0.010	0.20	0.25	0.30	0.35	0.45			
	0.012	0.20	0.25	0.30	0.35	0.45			
	0.016	0.20	0.25	0.30	0.35	0.45			
	0.018	0.20	0.25	0.30	0.35	0.45			
	0.020	0.20	0.25	0.30	0.35	0.45	0.31		
	0.022	0.18	0.25	0.30	0.35	0.45	0.31		
	0.025	0.18	0.25	0.30	0.35	0.45	0.31	0.37	
	0.028	0.18	0.24	0.30	0.35	0.45	0.31	0.37	
	0.032	0.18	0.23	0.30	0.35	0.45	0.31	0.37	0.43
ALSO ALLOY STEEL HT TO 100,000 PSI OR GREATER	0.036	0.18	0.23	0.29	0.35	0.45	0.31	0.37	0.43
	0.040	0.18	0.23	0.28	0.35	0.45	0.31	0.37	0.43
	0.045	0.18	0.23	0.27	0.35	0.45	0.31	0.37	0.43
	0.050	0.17	0.23	0.27	0.32	0.45	0.31	0.37	0.43
	0.056	0.17	0.22	0.27	0.32	0.41	0.31	0.37	0.43
	0.063	0.17	0.21	0.27	0.32	0.41	0.31	0.37	0.43
	0.071	0.17	0.21	0.27	0.32	0.41	0.31	0.37	0.43
	0.080	0.17	0.21	0.25	0.32	0.40	0.31	0.37	0.43
	0.090		0.21	0.25	0.29	0.40	0.31	0.37	0.43
	0.100			0.25	0.29	0.40	0.31	0.37	0.43
	0.112			0.25	0.29	0.39	0.31	0.37	0.43
	0.125				0.29	0.37	0.31	0.37	0.43

TABLE III

Fastener Edge Margins
Figure 3 (Sheet 2)

BOEING PROPRIETARY - Copyright © - Unpublished Work - See title page for details.

HEAD STYLE		PROTRUDING HEAD (BOLTS AND SCREWS) TENSION PROTRUDING HEAD (LOCKBOLTS AND HEX-DRIVE BOLTS)							
LOADING		SINGLE SHEAR							
BOLTED MATERIAL		BOLT DIAMETERS							
ALLOY	GAGE	3/16	1/4	5/16	3/8	7/16	1/2	9/16	5/8
		EDGE MARGIN (± 0.05)							
ALUMINUM	0.032	0.37	0.49						
	0.036	0.37	0.49						
	0.040	0.37	0.49						
	0.045	0.37	0.49						
	0.050	0.37	0.49	0.59					
	0.056	0.37	0.49	0.59					
	0.063	0.37	0.49	0.59	0.69				
	0.071	0.37	0.49	0.59	0.69				
	0.080	0.37	0.49	0.59	0.69	0.79			
	0.090	0.37	0.49	0.59	0.69	0.79	0.90		
	0.100	0.37	0.49	0.59	0.69	0.79	0.90	1.01	
	0.112	0.37	0.49	0.59	0.69	0.79	0.90	1.01	
	0.125	0.37	0.49	0.59	0.69	0.79	0.90	1.01	1.11
	0.140	0.37	0.49	0.59	0.69	0.79	0.90	1.01	1.11
	0.160	0.37	0.49	0.59	0.69	0.79	0.90	1.01	1.11
	0.180	0.35	0.49	0.59	0.69	0.79	0.90	1.01	1.11
	0.190	0.34	0.49	0.59	0.69	0.79	0.90	1.01	1.11
	0.200	0.33	0.49	0.59	0.69	0.79	0.90	1.01	1.11
	0.224	0.31	0.46	0.59	0.69	0.79	0.90	1.01	1.11
	0.250	0.29	0.43	0.58	0.69	0.79	0.90	1.01	1.11
	0.313	0.29	0.38	0.53	0.69	0.79	0.90	1.01	1.11
	0.375	0.29	0.37	0.48	0.63	0.79	0.90	1.01	1.11
	0.500	0.29	0.37	0.46	0.54	0.67	0.82	0.99	1.11
	0.625	0.29	0.37	0.46	0.54	0.62	0.72	0.86	1.01
	0.750	0.29	0.37	0.46	0.54	0.62	0.70	0.78	0.90

TABLE IV

Fastener Edge Margins
Figure 3 (Sheet 3)

BOEING PROPRIETARY - Copyright © - Unpublished Work - See title page for details.

HEAD STYLE		100 DEGREE HEAD (BOLTS, SCREWS, LOCKBOLTS AND HEX-DRIVE BOLTS) SHEAR PROTRUDING HEAD (LOCKBOLTS AND HEX-DRIVE BOLTS) PROTRUDING AND FLUSH HEAD BLIND FASTENERS									
LOADING		SINGLE SHEAR									
BOLTED MATERIAL		BOLT DIAMETERS									
ALLOY	GAGE	1/8	5/32	3/16	1/4	5/16	3/8	7/16	1/2	9/16	5/8
		EDGE MARGINS (± 0.05)									
ALL ALUMINUM ALLOYS, CORROSION RESISTANT STEELS AND TITANIUM	0.032	0.30	0.36								
	0.036	0.30	0.36								
	0.040	0.30	0.36								
	0.045	0.30	0.36								
	0.050	0.30	0.36	0.43	0.57						
	0.056	0.30	0.36	0.43	0.57						
	0.063	0.30	0.36	0.43	0.57	0.70	0.84	0.97	1.12		
	0.071	0.30	0.36	0.43	0.56	0.70	0.84	0.97	1.11	1.25	1.39
	0.080	0.30	0.36	0.43	0.56	0.69	0.83	0.96	1.11	1.25	1.39
	0.090	0.30	0.36	0.43	0.55	0.68	0.83	0.96	1.10	1.24	1.38
	0.100	0.30	0.36	0.43	0.55	0.68	0.82	0.95	1.09	1.24	1.38
	0.112	0.30	0.36	0.43	0.55	0.68	0.82	0.95	1.09	1.23	1.37
	0.125	0.30	0.36	0.43	0.55	0.68	0.81	0.94	1.08	1.22	1.36
	0.140	0.30	0.36	0.43	0.55	0.68	0.80	0.93	1.06	1.20	1.36
	0.160	0.30	0.36	0.43	0.55	0.68	0.80	0.92	1.06	1.20	1.35
	0.180	0.30	0.36	0.43	0.55	0.68	0.80	0.92	1.05	1.19	1.33
	0.190	0.30	0.36	0.43	0.55	0.68	0.80	0.92	1.05	1.18	1.32
	0.200	0.30	0.36	0.43	0.55	0.68	0.80	0.92	1.05	1.18	1.31
	0.224	0.30	0.36	0.43	0.55	0.68	0.80	0.92	1.05	1.17	1.30
	0.250	0.30	0.36	0.43	0.55	0.68	0.80	0.92	1.05	1.17	1.30
	0.313	0.30	0.36	0.43	0.55	0.68	0.80	0.92	1.05	1.17	1.30
	0.375	0.30	0.36	0.43	0.55	0.68	0.80	0.92	1.05	1.17	1.30
	0.500	0.30	0.36	0.43	0.55	0.68	0.80	0.92	1.05	1.17	1.30
	0.625	0.30	0.36	0.43	0.55	0.68	0.80	0.92	1.05	1.17	1.30
	0.750	0.30	0.36	0.43	0.55	0.68	0.80	0.92	1.05	1.17	1.30

TABLE V

Fastener Edge Margins
Figure 3 (Sheet 4)

BOEING PROPRIETARY - Copyright © - Unpublished Work - See title page for details.

1. Coin Dimpling

A. Flush riveting, using 100° countersunk rivets, can be accomplished either by countersinking or by coin dimpling. Countersinking cuts away metal around the rivet or bolt hole and in thinner gages of material will cause considerable weakening of the joint. Coin dimpling produces an interlocking or nesting effect of one sheet into another and results in increased joint strength. Coin dimpling is a standard sheet metal forming process in which the material is formed exactly to the shape of the fastener and may be done with or without heated dies, depending upon the type and alloy of material to be dimpled. Dimples made by the coin dimpling process are less likely to crack than dimples made by other processes.

B. The ram coin dimpling process makes use of a male dimpling tool or punch operating under a controlled dimpling force, and a female dimpling tool with an internal coining ram preloaded in opposition to the downward pressure of the punch. The preload pressure on the coining ram exerts a pressure on the bottom of the dimple and forces the material to assume the sharp contours of the dimpling tools. Typical ram coin dimpling tools are illustrated in Figure 1. The coining ram is preloaded by air pressure through a mechanical linkage or by an internal spring.

C. Standard coin dimpling procedure is to assemble the parts and drill. The parts are then separated and dimpled individually.

NOTE: To obtain a close fit between fastener shank and the dimpled hole when dimpling for non-holefilling steel fasteners, predrill the hole with an undersize drill as indicated in Figure 2, dimple and then drill to the final hole size.

D. Any number of coin dimples may be nested in coin dimpled holes or in countersunk holes, as illustrated in Figure 1, but dimples formed by other processes are not to be nestled in coin dimpled or countersunk holes. To properly transmit shear, dimples must nest tightly in dimples or in countersunk holes within certain limits. The gap between sheets 1/8 inch from the edge of the dimple should be between 0.0005 to 0.0100 inch before installing the fastener, and between 0.0000 to 0.0100 inch after installing the fastener.

E. Multiple thicknesses of material normally should not be dimpled simultaneously since joint strength will be decreased. Maximum sheet thickness to be dimpled is dependent upon the pressure available from the dimpling equipment, the material being dimpled, and the fastener diameter. Maximum sheet thicknesses for coin dimpling various materials are listed in Figure 3.

F. Instructure under dimpled material should be countersunk where possible, since this type of joint is as strong as an all dimpled joint and also reduces warpage. Minimum thickness of instructure for countersinking is given in Figure 4. When countersinking instructure, use a stop countersink tool to obtain the proper countersink depth. Dimensions of the countersink recess should conform to the dimensions of the fastener head.

G. Coin dimpling may be substituted for countersinking, but countersinking shall not be substituted for coin dimpling if the material thickness is below the minimum allowable for countersinking as indicated in figure 4. When substituting countersunk holes for coin dimpled holes, the quantity of fasteners must be increased or a larger diameter fastener must be used as indicated in 51-30-3.

H. Severe material stretching and distortion of the part may occur when using minimum edge margins and dimpling flat flanges of material with a thickness of 0.050 inch or greater. To prevent stretching and distortion, the design edge margin given in 51-30-6 must be increased by 50 percent for flat fanges in this thickness range. Flat flanges with bent up edges or material with thickness less than 0.050 inch are not noticeable affected.

I. Room temperature dimpling is standard for coin dimpling 2024 clad aluminum alloy and corrosion resistant steel. If cracking of the dimple occurs, the coining ram pressure should be increased and/or hot dimpling should be used.

J. Hot coin dimpling is used to prevent cracking. Clamp-on heaters are used to heat the dimpling tools and the time or dwell that heated dies are in contact with the material before the dimple is formed is automatically regulated, since hot dimpling must be controlled to prevent loss of sheet strength. Annealing of aluminum alloy sheet will be minimized if dimpling is done within the temperature and dwell limits specified in Figure 5.

K. 7075 bare or clad aluminum alloy must be hot dimpled. Other aluminum alloys, bare or clad except bare 2024, may be hot dimpled. Aluminum alloys that have been alodized, anodized, or given a zinc chromate finish treatment, may be dimpled.

NOTE: Bare 2024 aluminum alloy without protective finish shall not be dimpled.

Bare 2024 aluminum alloy with a protective finish shall not be dimpled if used on exterior of the airplane.

L. Coin dimpling may be accomplished with stationary or portable equipment using heated or non-heated coin dimpling tools. The preferred method of coin dimpling, when using portable equipment, is by use of a squeeze gun. Figure 6 illustrates a Model CP351 pneumatic squeeze gun available from The Chicago Pneumatic Tool Co., 6 East 44th Street, New York 17, New York. The yoke illustrated on the squeeze gun is a standard "C" type yoke. Other types of yokes are available to meet different dimpling conditions. Coin dimpling tools are available in different types and sizes to accommodate various types of fasteners, and heaters are available for the different coin dimpling tools. Portable hot dimpling control panels to control temperature, dwell, and pressure when hot dimpling are available with single or dual circuits for heating one or both dimpling tools. Portable control panels of the type illustrated in figure 6, as well as yokes, tools and tool heaters are available from the Zephyr Manufacturing Co., Inc., Inglewood, California, the Martin Aircraft Tool Co., 10630 South Santa Fe Avenue, South Gate, California or equivalent source.

M. Where accessibility prevents coin dimpling using a squeeze gun, a standard rivet gun may be used. A male dimpling tool or punch is inserted in the rivet gun. The female tool, which incorporates a spring loaded coining ram, is inserted in either a steel bucking bar or a special bucking bar with dimpling tool heating provisions. Both types are illustrated in Figure 6. The special bucking bars incorporating heating provisions are available from Zephyr Manufacturing Company or equivalent source.

N. The flow-form, or modified radius, dimpling process makes use of a male dimpling tool used in coin dimpling; however, the female dimpling tool does not incorporate the internal coining ram. Flow-form dimpling may also be done with or without heated tools, depending on the material to be dimpled. The flow-form, or modified radius, dimpling process may be used only if ram coin dimpling equipment is not available.

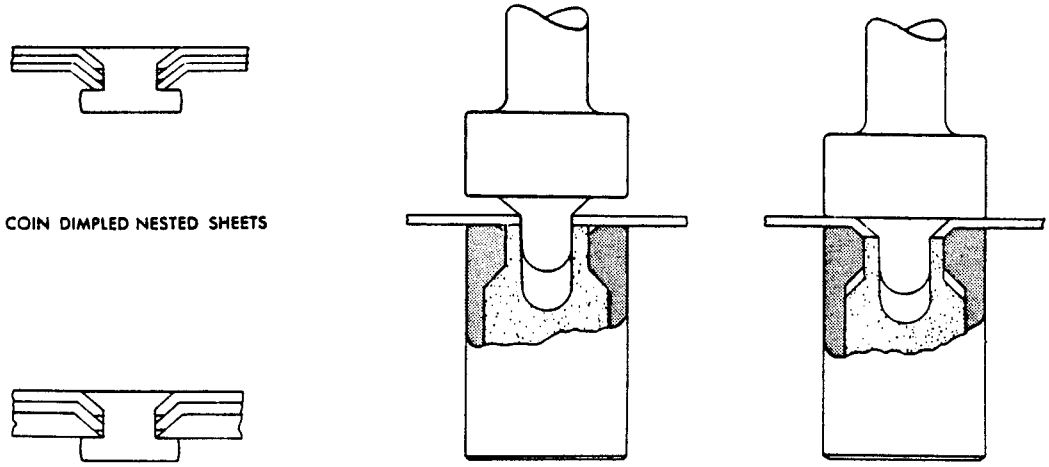

Coin Dimpling
Figure 1

FASTENER TYPE	FASTENER SIZE	DRILL SIZE FOR PILOT HOLE	HOLE SIZE BEFORE DIMPLING	
			MINIMUM	MAXIMUM
HUCK BLIND RIVETS	1/8	NO. 40 (.098)	.098	.103
	5/32	NO. 30 (.128)	.128	.133
	3/16	NO. 20 (.161)	.161	.166
HI-SHEAR RIVETS, AND SHEAR LOCK BOLTS	3/16	NO. 17 (.173)	.173	.188
	1/4	NO. 1 (.228)	.228	.243
	5/16	9/32 (.281)	.281	.296
	3/8	5/16 (.312)	.312	.327
CLOSE TOLERANCE BOLTS	8-32	NO. 29 (.136)	.136	.151
	10-32	NO. 24 (.152)	.152	.167
	1/4-28	NO. 6 (.204)	.204	.219
	5/16-24	1/4 (.250)	.250	.265
	3/8-24	5/16 (.312)	.312	.327

Pre-dimple Hole Size
Figure 2

MATERIAL TYPE	MAXIMUM SHEET THICKNESS FOR GIVEN FASTENER DIAMETERS [A]				
	1/8 DIA	5/32 DIA	3/16 DIA	1/4 DIA	5/16 DIA
ALUMINUM ALLOY 2024-T3	0.071	0.071	0.071	0.063	0.050
ALUMINUM ALLOY 7075-T6	0.071	0.071	0.071	0.050	0.040
CORROSION RESISTANT STEEL, ANNEALED	0.063	0.063	0.063	0.063	0.040
CORROSION RESISTANT STEEL, 1/2 HARD	0.040	0.032	0.025	0.020	

NOTE

[A] MAXIMUM SHEET THICKNESS FOR DIMPLING WITH STATIONARY AND PORTABLE EQUIPMENT AT 90 POUNDS LINE PRESSURE.

Coin Dimpling Sheet Thickness
Figure 3

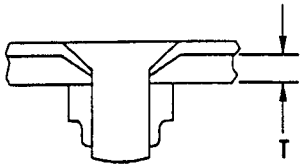

T = THICKNESS OF NON-DIMPLED COUNTERSUNK SHEET

FASTENER TYPE	MINIMUM THICKNESS T FOR GIVEN FASTENER DIAMETERS [A] [B]										
	3/32 DIA	1/8 DIA	5/32 DIA	3/16 DIA	1/4 DIA	5/16 DIA	3/8 DIA	7/16 DIA	1/2 DIA	9/16 DIA	5/8 DIA
STANDARD RIVETS, BLIND RIVETS, AND ALUMINUM LOCKBOLTS	0.048	0.056	0.072	0.091	0.124	0.138	0.174				
BACR15CE SHEAR HEAD RIVETS		0.038	0.049	0.060	0.078						
SHEAR BOLTS, SHEAR LOCKBOLTS, AND SHEAR HILOKS				0.060	0.079	0.088	0.101	0.125	0.138		
TENSION BOLTS, TENSION LOCKBOLTS, TENSION HILOKS, AND HI-STRENGTH BLIND FASTENERS				0.104	0.140	0.174	0.209	0.244	0.278	0.313	0.351

NOTE

[A] COUNTERSINKING OF HOLES FOR FASTENERS SHALL BE USED IN PREFERENCE TO DIMPLING WHEREVER STRENGTH IS NOT SACRIFICED, BECAUSE IT IS MORE ECONOMICAL AND FACILITATES REPAIR. COUNTERSINKING IS LIMITED BY THE MINIMUM SHEET THICKNESS T SHOWN IN THE TABLE. VALUES FOR T ARE BASED ON COUNTERSINK DEPTH NOT TO EXCEED 80% OF NON-DIMPLED COUNTERSUNK MATERIAL THICKNESS.

[B] THESE MINIMUM THICKNESS REQUIREMENTS ARE INTENDED TO PREVENT KNIFE EDGES IN THE COUNTERSUNK SHEET TO REDUCE THE POSSIBILITY OF FATIGUE CRACKING. SPECIFIC REPAIRS, DEFINED ELSEWHERE IN THIS REPAIR MANUAL, WHICH DEVIATE FROM THESE REQUIREMENTS, SUPERSEDE THESE REQUIREMENTS.

Minimum Allowable Thickness for 100° Countersinking of Understructures
Figure 4

MACHINE SETTING FOR ALUMINUM ALLOY [A]

GAGE MATERIAL TO BE FASTENED	TYPE OF FASTENER																											
	STANDARD SOLID SHANK RIVETS HUCK BLIND RIVET										HI-SHEAR RIVETS SHEAR LOCK BOLTS								CLOSE TOLERANCE BOLTS									
	FASTENER DIAMETER																											
	3/32		1/8		5/32		3/16		1/4		3/16		1/4		5/16		3/8		NO. 8		NO. 10		1/4		5/16		3/8	
	DWELL TIME AND PRESSURE																											
	SEC	PSI	SEC	PSI	SEC	PSI	SEC	PSI	SEC	PSI	SEC	PSI	SEC	PSI	SEC	PSI	SEC	PSI	SEC	PSI	SEC	PSI	SEC	PSI	SEC	PSI	SEC	PSI
.000-.018	.25	30	.25	30															.25	30								
.018-.022	.25	40	.25	40	.25	40					.25	40							.50	40	.50	40						
.022-.028	1	40	.50	40	.50	40	.50	40			1	40	.50	40					1	40	1	40	1	40				
.028-.038	1.50	50	1.50	50	1	50	1	50	1	50	1.50	50	1	50	1	50			2	50	2	50	2	50	2	50		
.038-.048	2	60	2	60	1.50	60	1.50	60	1.50	60	2	60	2	60	1.50	60	1.50	60	3	60	3	60	3	60	3	60	3	60
.048-.058	4	70	4	70	4	70	3	70	3	70	4	70	4	70	3	70	3	80	5	70	5	70	5	70	5	70	5	70
.058-.068	5	70	5	70	5	70	5	70	4	70	5	80	5	80	5	80	5	80	5	80	5	80	5	80	5	80	5	80
.068-.078			6	90	6	90	6	90	6	90	6	90	6	90	6	90	6	90			6	90	6	90	6	90	6	90
.078-.088					6	90	6	90	6	90	6	90	6	90	6	90	6	90			6	90	6	90	6	90	6	90
.088-.098					6	90	6	90	6	90			6	90	6	90	6	90					6	90	6	90	6	90
.098-.108							7	90	7	90					7	90	7	90					6	90	6	90	6	90
.108-.125									7	90							7	90							7	90	7	90

NOTE

[A] TEMPERATURE SETTINGS:

	HIGH	LOW
SINGLE HEATER CONTROL	700°F	650°F
DOUBLE HEATER CONTROL	600°F	550°F

Hot Dimpling
Figure 5

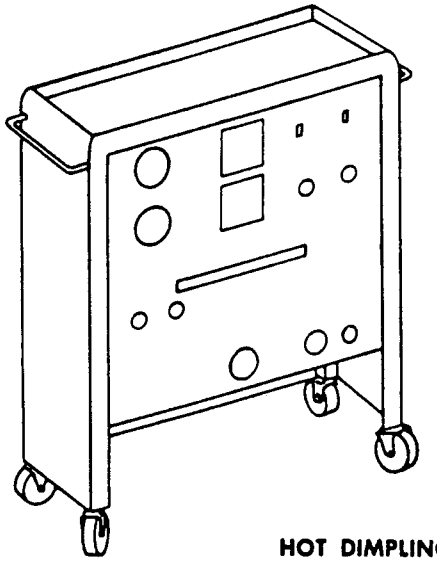

HOT DIMPLING CONTROL PANEL

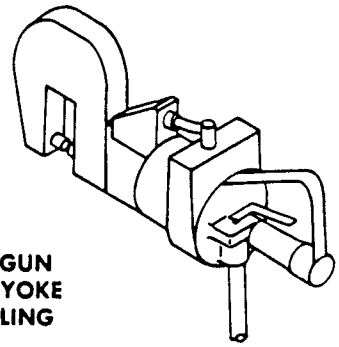

SQUEEZE GUN WITH "C" YOKE FOR DIMPLING

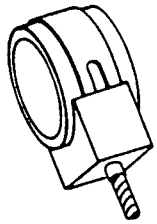

DIMPLING TOOL CLAMP-ON HEATER

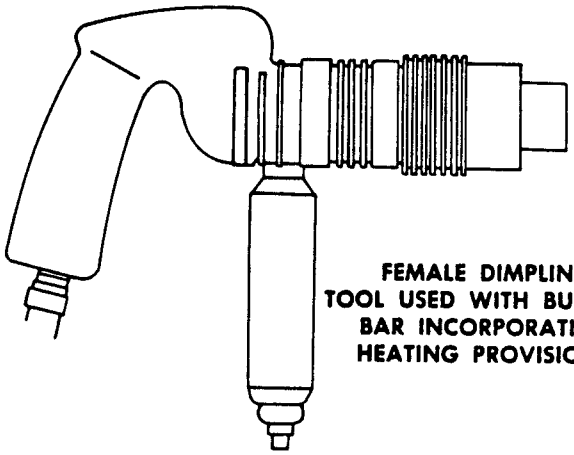

FEMALE DIMPLING TOOL USED WITH BUCKING BAR INCORPORATING HEATING PROVISIONS

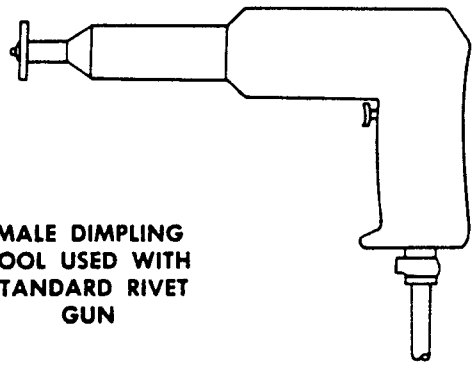

MALE DIMPLING TOOL USED WITH STANDARD RIVET GUN

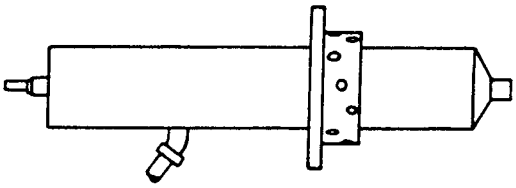

FEMALE DIMPLING TOOL USED WITH BUCKING BAR INCORPORATING HEATING PROVISIONS

FEMALE DIMPLING TOOL USED WITH STEEL BUCKING BAR

Portable Coin Dimpling Equipment
Figure 6

COUNTERSINKING

1. Applicability

   A. The instructions given in this subject are applicable to countersink holes in metal structures.

   B. Refer to SRM 51-10-7 to find the instructions to countersink holes in composite structures.

2. General

   A. Some of the information in this subject can be found in Boeing Process Specifications BAC5004-1, BAC5004-2, BAC5004-3, BAC5009, BAC5047, and BAC5060.

   B. Refer to the Boeing Engineer Drawings and SRM 51-70 for fastener head flushness specifications.

3. References

   A. AMM 20-30-92/201, Final Cleaning Prior to General Sealing (Series 92)

   B. SOPM 20-30-92, Final Cleaning Prior to General Sealing (Series 92)

   C. SRM 51-10-7, Hole Drilling and Machining of Composite Structures

   D. SRM 51-30-2, Fastener Installation and Removal

   E. SRM 51-30-5, Fastener Hole Sizes

   F. SRM 51-70, Aerodynamic Smoothness

   G. SRM 53-30-3, Fuselage Skin Repairs

4. The Use of the Microstop-Countersink Tool

   A. Use the microstop-countersink tool that is fitted with a removable cutter. See Fig. 1 for use of the microstop countersink.

      (1) The shaft of the microstop-countersink tool moves on a bearing inside an adjustable locking sleeve and foot piece assembly. The foot piece (or stop) fits on to the shaft bearing, and permits adjustments in countersink depth. You can make adjustments in increments of 0.001 inch.

      CAUTION: MAKE SURE THAT THE PILOT PIN IS APPROXIMATELY 0.002 INCH LESS IN DIAMETER THAN THE FASTENER HOLE. THIS WILL PERMIT THE CUTTER TO SPIN WITHOUT BINDING INSIDE THE HOLE. IF YOU DO NOT OBEY, THE CUTTER WILL NOT OPERATE CORRECTLY AND THE RESULT CAN BE AN UNSATISFACTORY COUNTERSINK.

      (2) A pilot pin guides the spinning cutter as it cuts into the material.

BOEING PROPRIETARY - Copyright © - Unpublished Work - See title page for details.

B. Countersink cutters are available with different cutting angles. The standard tool number code is stamped on each cutter as shown in Fig. 1.

5. Instructions to use the Microstop-Countersink Tool

A. To make the countersink depth adjustment on the microstop-countersink tool, do the steps that follow:

(1) Pull the sleeve back.

(2) Turn the stop to the correct countersink depth.

(3) Put the splines on the tool together so that the adjustment is securely locked.

B. Before you use the microstop-countersink tool, do as follows:

(1) Do a visual inspection of the countersink cutter. Do a check for:

(a) Pilot Size

(b) Sharpness

(c) Degrees for the cutting angle

(d) True running

(2) Make sure that the face on the microstop-countersink tool is clean and polished so that you do not cause damage to the repair material.

C. To use the microstop-countersink tool, do as follows:

NOTE: Do the countersink on a piece of scrap material to verify the adjustment before you do it on the repair material.

(1) Set the cutter to a safe depth, and slowly increase the depth to the correct setting.

NOTE: Make sure that you hold the countersink-microstop tool at a 90-degree angle to the material.

(2) Make a full depth of cut each time.

(3) Apply the pressure directly behind the countersink.

(4) Do not permit the stop to spin on the repair material.

(5) Install the repair fasteners as shown in SRM 51-30-2.

(6) Inspect for the correct fastener-head height as shown in SRM 51-30-2.

(7) When you can install the fasteners correctly in the piece of scrap metal, you can use the microstop-countersink tool to do the repair.

BOEING PROPRIETARY - Copyright © - Unpublished Work - See title page for details.

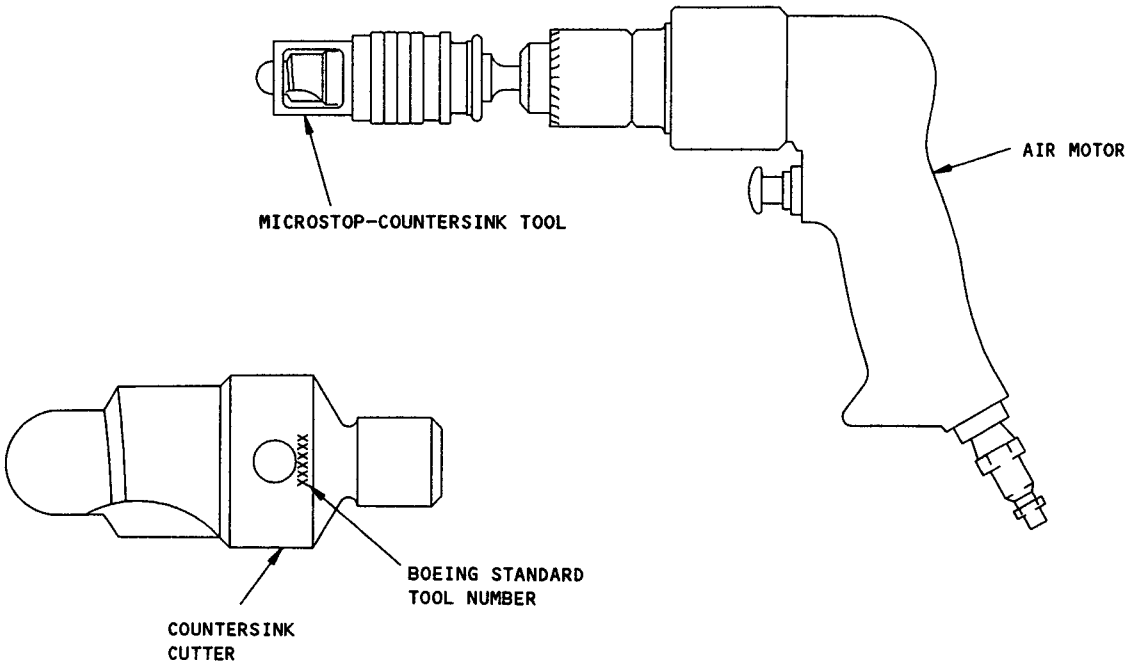

NOTES

- TO FIND THE CORRECT COUNTERSINK DEPTH:
  - USE THE MICROSTOP-COUNTERSINK TOOL TO MAKE 5 COUNTERSINK HOLES IN A SCRAP PIECE OF METAL. THE SCRAP PIECE OF METAL SHOULD BE MADE FROM THE SAME ALLOY AND THICKNESS AS THE PART THAT YOU COUNTERSINK
  - INSTALL 5 FLUSH-HEAD REPAIR-FASTENERS IN THE SCRAP PIECE OF METAL
  - INSPECT THE FASTENERS FOR CORRECT FASTENER-HEAD HEIGHT. REFER TO SRM 51-30-2
  - ADJUST THE MICROSTOP-COUNTERSINK TOOL AND DO THE ABOVE STEPS AGAIN, UNTIL YOU GET THE CORRECT FASTENER-HEAD HEIGHT
  - WHEN THE MICROSTOP-COUNTERSINK TOOL IS ADJUSTED FOR THE CORRECT FASTENER-HEAD HEIGHT, YOU CAN USE THE TOOL FOR THE REPAIR.
- TO SELECT THE MICROSTOP-COUNTERSINK TOOL, CUTTER, AND PILOT, SEE BOEING STANDARD TOOL DRAWINGS ST1221, ST1222 AND ST1223.
- IF COLDWORK IS NECESSARY, COLDWORK THE HOLE BEFORE YOU COUNTERSINK THE HOLE.
- SOME OF THE VENDORS FOR THE ST1219, ST1221B, ST1222B AND ST1223B MICROSTOP-COUNTERSINK TOOLS ARE:

  AIRTECH INTERNATIONAL INC.
  2542 E. DE LAMO BLVD
  CARSON, CA 90749

  PACIFIC DISTRIBUTING, INC
  7118 BEACON AVE. S.
  SEATTLE, WA 98108

The Microstop-Countersink Tool
Figure 1

BOEING PROPRIETARY - Copyright © - Unpublished Work - See title page for details.

REPAIR INSTRUCTIONS

NOTE: Use this special repair washer to plug existing countersinks for repairs where called out in this manual. A typical repair application is illustrated in Detail I.

1. Fabricate the countersink repair washer to match the original countersunk hole. See Tables I.
2. Solvent Clean:

   WARNING: WHEN USING MEK (METHYL ETHYL KETONE) AVOID BREATHING OF VAPOR OR CONTACT WITH SKIN. WEAR RUBBER GLOVES. WHEN WORKING IN A CONFINED SPACE, ADEQUATE VENTILATION OR RESPIRATORY PROTECTION MUST BE PROVIDED. INJURY TO PERSONNEL MAY OCCUR.

   A. Clean countersink and the washer with MEK.

   B. Wipe off MEK before it has evaporated with a clean cloth.

   C. Repeat applications of clean solvent as necessary to remove oils.

3. Apply Sealant:

   A. Apply BMS 5-95 sealant between the mating surfaces of the countersink and the washer.

   B. Attach the surfaces with sufficient pressure to make sure the washer bonds correctly.

   C. The assembly may be moved immediately. 48 hours or more after the washer is installed, the assembly will have maximum strength.

NOTES

- WHEN YOU USE THIS REPAIR REFER TO:
  - SRM 51-10-2 FOR PROTECTIVE TREATMENT OF METALLIC AND NONMETALLIC MATERIALS
  - SRM 51-20-4 FOR REPAIR SEALING

[A] APPLY A CHEMICAL CONVERSION COATING AS GIVEN IN SRM 51-10-2

[B] OTHER SIZES CAN BE FOUND IN BOEING DRAWING 66-2955

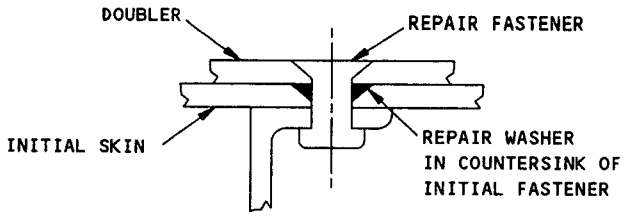

DETAIL I

Countersink Repair Washer
Figure 2 (Sheet 1)

BOEING PROPRIETARY - Copyright © - Unpublished Work - See title page for details.

INITIAL FASTENER TYPE	DIA.	COUNTERSINK REPAIR WASHER [B]				
				DIMENSIONS		MATERIAL [A]
		A ±0.005	B (REF.)	C (DIAMETER)	E +0.005 -0.002	
BACR15CE	1/8	0.181	0.030	0.128/0.135	0.006	2024-T4 BAR OR MAKE FROM BACR15CE()D RIVET
BACR15GF	5/32	0.234	0.037	0.159/0.171	0.006	
	3/16	0.284	0.045	0.191/0.202	0.006	
NAS1097	1/4	0.382	0.060	0.254/0.265	0.006	
	1/8	0.216	0.043	0.128/0.135	0.006	2024-T4 BAR OR MAKE FROM BACR15BA()D RIVET
	5/32	0.278	0.056	0.159/0.171	0.006	
BACR15BA	3/16	0.344	0.070	0.191/0.202	0.006	
BACB30ND	7/32	0.344	0.057	0.221/0.233	0.006	
	1/4	0.439	0.093	0.254/0.265	0.015	
BACB30NZ	9/32	0.439	0.080	0.284/0.296	0.015	
BACB30DY	5/16	0.527	0.105	0.312/0.316	0.015	
BACB30HD	11/32	0.527	0.092	0.344/0.348	0.015	
	3/8	0.657	0.133	0.375/0.379	0.015	
BACB30HA	13/32	0.657	0.120	0.406/0.410	0.015	
NAS1399	7/16	0.747	0.152	0.437/0.422	0.022	
	15/32	0.747	0.139	0.469/0.474	0.022	
	1/2	0.860	0.173	0.500/0.505	0.022	
	17/32	0.860	0.160	0.531/0.536	0.022	

100° HEAD COUNTERSINK REPAIR WASHERS
TABLE I

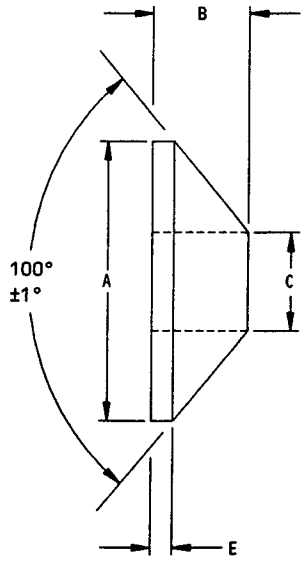

Countersink Repair Washer
Figure 2 (Sheet 2)

BOEING PROPRIETARY - Copyright © - Unpublished Work - See title page for details.

INITIAL FASTENER TYPE	DIA.	COUNTERSINK REPAIR WASHER [B]				
		DIMENSIONS				MATERIAL [A]
		A ±0.005	B (REF.)	C (DIAMETER)	E +0.005 -0.002	
BACB30FN BACB30GY BACB30EL BACB30NU	3/16	0.277	0.046	0.191/0.194	0.010	2024-T4 BAR
	7/32	0.277	0.034	0.219/0.223	0.010	
	1/4	0.358	0.060	0.250/0.254	0.015	
	9/32	0.358	0.047	0.281/0.285	0.015	
	5/16	0.438	0.068	0.312/0.328	0.015	
	11/32	0.438	0.055	0.344/0.348	0.015	
	3/8	0.525	0.078	0.375/0.379	0.015	
	13/32	0.525	0.065	0.406/0.410	0.015	
	7/16	0.617	0.097	0.437/0.442	0.022	
	15/32	0.617	0.084	0.469/0.474	0.022	
	1/2	0.704	0.108	0.500/0.505	0.022	
	17/32	0.704	0.095	0.531/0.536	0.022	
BACB30JC BACB30NY BACB30LU BACB30MS	3/16	0.344	0.079	0.191/0.194	0.015	
	7/32	0.344	0.068	0.219/0.223	0.015	
	1/4	0.469	0.106	0.250/0.254	0.015	
	9/32	0.469	0.094	0.281/0.285	0.015	
	5/16	0.595	0.133	0.312/0.328	0.015	
	11/32	0.595	0.121	0.344/0.348	0.015	
	3/8	0.722	0.160	0.375/0.379	0.015	
	13/32	0.722	0.148	0.406/0.410	0.015	
	7/16	0.835	0.189	0.437/0.442	0.022	
	15/32	0.835	0.176	0.469/0.474	0.022	
	1/2	0.961	0.217	0.500/0.505	0.022	
	17/32	0.961	0.204	0.531/0.536	0.022	

100° HEAD COUNTERSINK REPAIR WASHERS
TABLE I (CONT.)

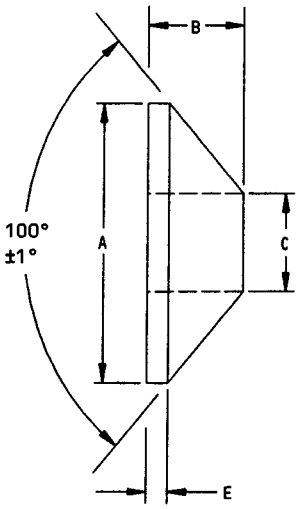

Countersink Repair Washer
Figure 2 (Sheet 3)

BOEING PROPRIETARY - Copyright © - Unpublished Work - See title page for details.

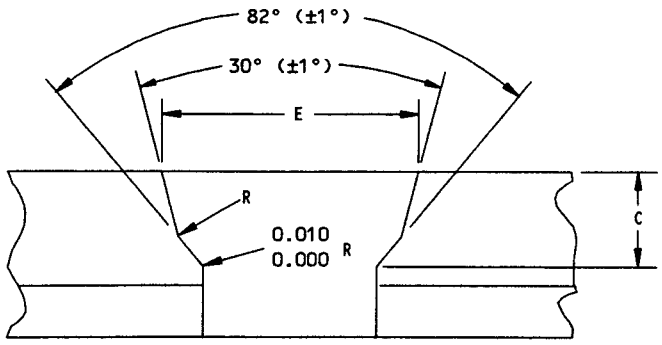

COUNTERSINK DIMENSIONS
DETAIL I

NOTES

- ALL DIMENSIONS ARE IN INCHES
- SEE TABLE I FOR BACR15FH AND BACR15GH RIVETS
- SEE TABLE II FOR BACR15FH AND BACR15GH OVERSIZE RIVETS

Dimensions of Modified 82°/30° Countersink
Figure 3 (Sheet 1)

BOEING PROPRIETARY - Copyright © - Unpublished Work - See title page for details.

COUNTERSINK TYPE	RIVET DIAMETER	DIMENSION C		DIMENSION E		RADIUS R	
		MIN.	MAX.	MIN.	MAX.	MIN.	MAX.
IV	1/4	0.089	0.100	0.349	0.354	0.09	0.12
	5/16	0.099	0.110	0.419	0.424	0.09	0.12
	3/8	0.105	0.120	0.479	0.484	0.09	0.12
V	5/32	0.060	0.070	0.219	0.224	0.03	0.05
	3/16	0.075	0.085	0.270	0.275	0.09	0.12
	1/4	0.102	0.112	0.355	0.360	0.09	0.12
	5/16	0.128	0.138	0.434	0.439	0.09	0.12
	3/8	0.154	0.164	0.503	0.508	0.09	0.12
	7/16	0.183	0.193	0.588	0.593	0.09	0.12

COUNTERSINK DIMENSIONS FOR BACR15FH AND BACR15GH RIVETS
TABLE I

COUNTERSINK TYPE	RIVET DIAMETER	DIMENSION C		DIMENSION E		RADIUS R	
		MIN.	MAX.	MIN.	MAX.	MIN.	MAX.
IV	7/32	0.075	0.085	0.300	0.305	0.09	0.12
	9/32	0.090	0.100	0.379	0.384	0.09	0.12
	11/32	0.100	0.110	0.449	0.454	0.09	0.12
	13/32	0.107	0.117	0.509	0.514	0.09	0.12
	7/16	0.115	0.125	0.549	0.554	0.09	0.12
V	7/32	0.075	0.085	0.300	0.305	0.09	0.12
	9/32	0.102	0.112	0.385	0.390	0.09	0.12
	11/32	0.128	0.138	0.464	0.469	0.09	0.12
	13/32	0.154	0.164	0.533	0.538	0.09	0.12
	7/16	0.154	0.164	0.575	0.580	0.09	0.12
	15/32	0.183	0.193	0.620	0.625	0.09	0.12

COUNTERSINK DIMENSIONS FOR OVERSIZE BACR15FH AND BACR15GH RIVETS
TABLE II

Dimensions of Modified 82°/30° Countersink
Figure 3 (Sheet 2)

BOEING PROPRIETARY - Copyright © - Unpublished Work - See title page for details.

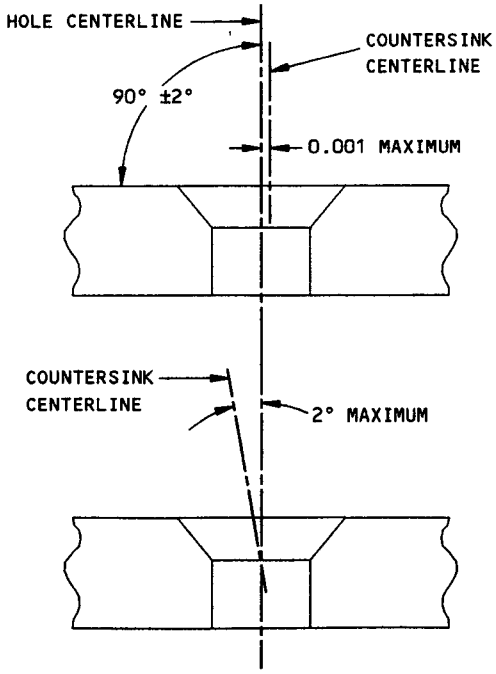

PERMITTED COUNTERSINK MISALIGNMENT AND ECCENTRICITY
DETAIL I

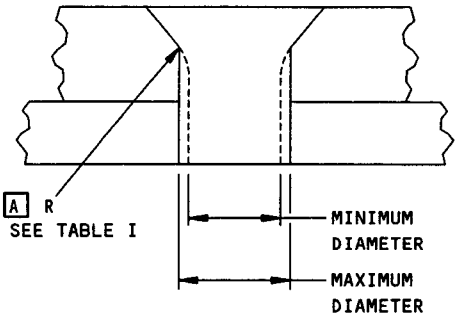

FILLET RELIEF
DETAIL II

FASTENER SIZE	RADIUS R	
	MIN	MAX
5/32 3/16 1/4	0.030	0.040
5/16 3/8	0.040	0.050
7/16 1/2 9/16 5/8 3/4 7/8 1	0.050	0.060

TABLE I

NOTE

A MAKE THE RADIUS BLEND SMOOTHLY WITH THE SHANK DIAMETER.

Countersink Detail for Flush Head Lockbolts and Hex-Drive Bolts
Figure 4

BOEING PROPRIETARY - Copyright © - Unpublished Work - See title page for details.

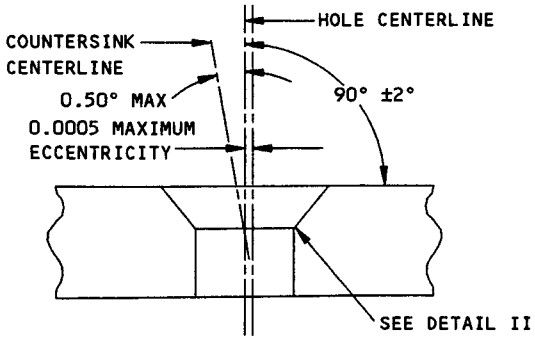

PERMISSIBLE COUNTERSINK MISALIGNMENT
ECCENTRICITY AND FILLET RELIEF
DETAIL I

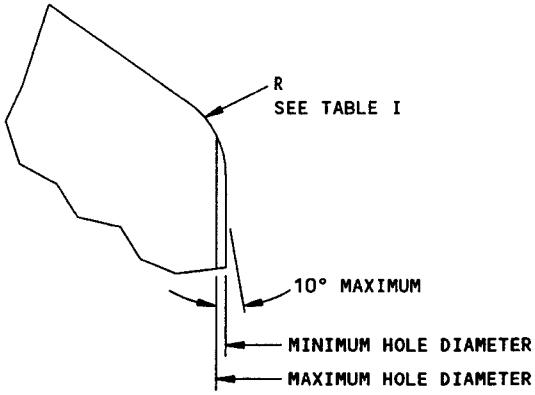

DETAIL II

NOMINAL THREAD SIZE	FLUSH HEAD			
	BACB30WQ "R" RADIUS		BACB30PT "R" RADIUS	
	MIN	MAX	MIN	MAX
0.1900-32	0.020	0.030	-	-
0.2500-28	0.020	0.030	0.050	0.060
0.3125-24	0.030	0.040	0.050	0.060
0.3750-24	0.030	0.040	0.050	0.060
0.4375-20	0.030	0.040	-	-

FILLET RELIEF LIMITS FOR FLUSH HEAD RADIUS LEAD-IN BOLT HOLES
TABLE I

NOTES:

- THE COUNTERSINK IS CUT AT THE SAME TIME THE HOLE IS DRILLED.

Countersink Detail for Flush Head Radius Lead-In Bolts
Figure 5

BOEING PROPRIETARY - Copyright © - Unpublished Work - See title page for details.

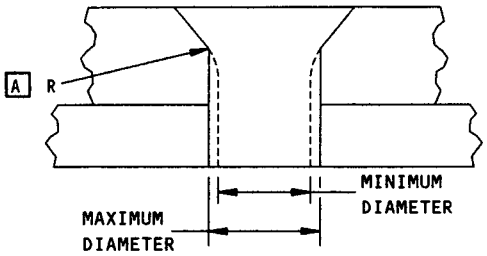

MAX SHANL DIA	100° FLUSH HEAD BOLT AND SCREW PART NUMBER SERIES									
	BACB30EM, BACB30FB, BACB30DL, BACB30DP, BACB30DY, BACB30FA, BACB30GD, BACB30MN, BACB30LH, BACB30LL, BACB30LP, BACB30LR, BACB30LU, BACB30NN, BACB30NU, BACB30MS, BACB30PC, BACB30RF, BACB30SW, BACB30TP, BACB30UW, BACB30VF, BACB30XK, BACB30XM, MS24693, MS27577, NAS1581, NAS1161, NAS8702		AN509, BACS12BF, BACS12BP, BACS12ER, BACS12GM, BACS12GP, BACS12GR, BACS12GX, MS24694, NAS514, NAS1219, NAS1221, NAS1299		BACB30AB, BACB30BF, BACB30WP, BACB30XD, NAS1790, NAS583 THRU 590, NAS1503, NAS1580, NAS1582, NAS1503 THRU 1510		NAS1972 THRU 1989, NAS1992 THRU 2000, NAS2803 THRU 2810, NAS333 THRU 340		NAS517, NAS1102, NAS1189, NAS1627, NAS1628	
	R FILLET RELIEF RADIUS									
	MIN	MAX	MIN	MAX	MIN	MAX	MIN	MAX	MIN	MAX
0.1120	0.012	0.022	0.012	0.022	-- --	-- --	-- --	-- --	0.015	0.025
0.1380	0.012	0.022	0.012	0.022	-- --	-- --	-- --	-- --	0.020	0.030
0.1640	0.020	0.030	0.015	0.025	-- --	-- --	0.030	0.040	0.020	0.030
0.1900	0.020	0.030	0.015	0.025	0.035	0.045	0.030	0.040	0.020	0.030
0.2500	0.020	0.030	0.015	0.025	0.035	0.045	0.030	0.040	0.020	0.030
0.3125	0.025	0.035	0.020	0.030	0.045	0.055	0.030	0.040	0.025	0.035
0.3750	0.030	0.040	0.020	0.030	0.045	0.055	0.030	0.040	0.030	0.040
0.4375	0.030	0.040	0.020	0.030	0.055	0.065	0.030	0.040	0.035	0.045
0.5000	0.030	0.040	0.020	0.030	0.055	0.065	0.030	0.040	0.040	0.050
0.5625	0.030	0.040	0.020	0.030	0.065	0.075	0.030	0.040	-- --	-- --
0.6250	0.030	0.040	-- --	-- --	0.070	0.080	0.030	0.040	-- --	-- --
0.7500	0.030	0.040	-- --	-- --	0.080	0.090	-- --	-- --	-- --	-- --
0.8750	0.030	0.040	-- --	-- --	0.090	0.100	-- --	-- --	-- --	-- --
1.0000	0.030	0.040	-- --	-- --	0.100	0.110	-- --	-- --	-- --	-- --
1.1250	0.040	0.050	-- --	-- --	-- --	-- --	-- --	-- --	-- --	-- --
1.2500	0.040	0.050	-- --	-- --	-- --	-- --	-- --	-- --	-- --	-- --
1.3750	-- --	-- --	-- --	-- --	-- --	-- --	-- --	-- --	-- --	-- --
1.5000	-- --	-- --	-- --	-- --	-- --	-- --	-- --	-- --	-- --	-- --
1.7500	-- --	-- --	-- --	-- --	-- --	-- --	-- --	-- --	-- --	-- --

FILLET RELIEF RADIUS LIMITS FOR FLUSH HEAD BOLTS AND SCREWS

NOTES

A MAKE THE RADIUS BLEND SMOOTHLY WITH THE SHANK DIAMETER.

Fillet Relief for Bolts
Figure 6

BOEING PROPRIETARY - Copyright © - Unpublished Work - See title page for details.

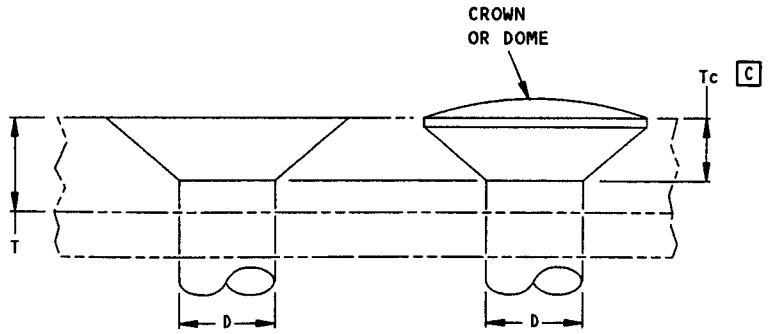

Tc = COUNTERSINK HEAD DIMENSION

DETAIL I A

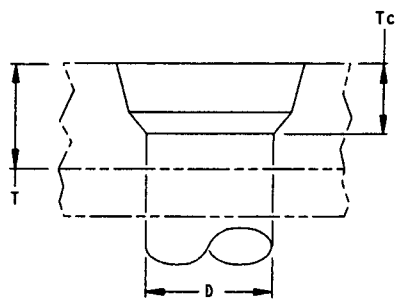

Tc = COUNTERSINK DIMENSION
(SEE FIGURE 4 FOR COUNTERSINK DATA)

DETAIL II B

NOTES

- T = MINIMUM SHEET THICKNESS = 1.5 X T_C
- ALL DIMENSIONS ARE GIVEN IN INCHES
- IN GENERAL, THE BOEING COMPANY RECOMMENDS THAT YOU USE THE LIMITS GIVEN IN THIS CHAPTER-SECTION-SUBJECT FOR MINIMUM SHEET THICKNESS. THE VALUES GIVEN WILL PREVENT KNIFE EDGE CONDITIONS IN COUNTERSUNK HOLES, AND WILL REDUCE POSSIBLE FATIGUE CRACKING OF THE METAL.
- IF A REPAIR IN A DIFFERENT CHAPTER-SECTION-SUBJECT GIVES LIMITS THAT ARE NOT THE SAME AS SRM 51-30-8, THEN YOU CAN USE THE DATA GIVEN IN THAT SPECIFIC REPAIR PROCEDURE.
- THE VALUES GIVEN IN THIS FIGURE APPLY TO ANY COMBINATION OF A FASTENER AND THE METAL MATERIALS THAT ARE FASTENED TOGETHER. THE MINIMUM SHEET THICKNESS VALUES ARE FOR A ZERO TOLERANCE CONDITION BETWEEN THE FASTENER HEAD AND THE METAL SURFACE.
- WHERE THE FASTENER HEAD IS PERMITTED TO BE BELOW THE FLUSH SURFACE, YOU MUST INCREASE THE VALUE OF "Tc" BY THIS AMOUNT TO CALCULATE THE MINIMUM THICKNESS "T".
- UNLESS IT IS SPECIFIED IN THE CHAPTER-SECTION-SUBJECT THAT YOU ARE PERMITTED TO SHAVE A FASTENER HEAD, IN GENERAL, THE BOEING COMPANY RECOMMENDS THAT YOU DO NOT SHAVE THE FASTENER HEAD TO MAKE IT FLUSH WITH THE SURFACE OF THE REPAIR AREA.
- FOR THE APPLICABLE DATA TO INSTALL BACR15FV RIVETS, REFER TO SRM 51-30-2.
- USE PROTRUDING HEAD FASTENERS WHEN THE THICKNESS "T" IS NOT SUFFICIENT TO CORRECTLY INSTALL A COUNTERSINK FASTENER.
- IF TWO SHEETS HAVE BEEN STRUCTURALLY BONDED TOGETHER AS GIVEN IN SRM 51-40-5, THEN THE MINIMUM SHEET THICKNESS CAN BE THE SUM OF BOTH SHEETS. (100° HEAD FASTENERS ONLY)
- DO NOT USE TABLE I AS A GUIDE FOR THE SUBSTITUTION OF LARGER DIAMETER FASTENERS IN A REPAIR AREA. USE ONLY THE OVERSIZED FASTENERS THAT ARE SPECIFIED IN THE REPAIR PROCEDURES GIVEN IN THIS STRUCTURAL REPAIR MANUAL.

A TO INSTALL ALL FASTENER TYPES GIVEN IN TABLE I EXCEPT BACR15FH AND BACR15GH RIVETS

B TO INSTALL BACR15FH AND BACR15GH TYPE IV AND V RIVETS.

C SOME FASTENERS HAVE A "CROWN" OR "DOME". THE HEIGHT OF THE CROWN OR DOME IS NOT USED TO CALCULATE MINIMUM SHEET THICKNESS.

Minimum Sheet Thickness for Countersinking of Fasteners
Figure 7 (Sheet 1)

BOEING PROPRIETARY - Copyright © - Unpublished Work - See title page for details.

EXAMPLE OF MINIMUM SHEET THICKNESS FOR COUNTERSUNK FASTENERS (T)												
FASTENER DESCRIPTION	NOMINAL FASTENER DIAMETER (D)											
	3/32	1/8	5/32	3/16	7/32	1/4	9/32	5/16	11/32	3/8	13/32	7/16
BOLT - HEX DRIVE												
BACB30XR				0.069		0.090						
BACB30JC			0.110	0.125		0.168		0.209		0.251		0.293
BACB30XW			0.060	0.069		0.090		0.101		0.116		
BACB30NW			0.062	0.072		0.092		0.102		0.117		0.146
BACB30VU			0.062	0.072		0.092		0.102		0.117		
BACB30FN			0.065	0.072		0.095		0.105		0.122		0.150
BACB30XG			0.081	0.102		0.140		0.158		0.200		
BACB30ND			0.084	0.117		0.147		0.164		0.206		0.231
BACB30NZ			0.081	0.104		0.141		0.158		0.200		0.231
BACB30XF			0.105	0.122		0.162		0.203		0.243		
BACB30NY			0.105	0.122		0.162		0.203		0.243		0.285
BACB30NY (1/64 OVERSIZE)				0.112		0.159		0.200		0.242		0.284
BACB30NY (1/32 OVERSIZE)				0.105		0.149		0.189		0.231		0.273
BACB30YM				0.122		0.162		0.203		0.243		0.285
BACB30YM (1/64 OVERSIZE)				0.116		0.159		0.200		0.242		0.284
BACB30YM (1/32 OVERSIZE)				0.105		0.149		0.189		0.231		0.273
BACB30YN				0.072		0.092		0.102		0.117		0.146
BACB30YN (1/64 OVERSIZE)				0.063		0.086		0.096		0.113		0.141
BACB30YN (1/32 OVERSIZE)				0.072		0.095		0.105		0.122		0.150
BACB30YP			0.062	0.071		0.092		0.102		0.120		
LOCKBOLT												
BACB30WB			0.060	0.068		0.089		0.099		0.114		
BACB30XT				0.069		0.090		0.101		0.125		
BACB30XU				0.069		0.090		0.101		0.125		
BACB30VM			0.065	0.074		0.095		0.107		0.122		
BACB30VP			0.065	0.074		0.095		0.107		0.122		
BACB30XB			0.081	0.104		0.141		0.158		0.200		
BACB30WD			0.110	0.126		0.165		0.206		0.248		
BACB30DY			0.083	0.107		0.147		0.164		0.206		
BACB30HD				0.107		0.147		0.164		0.206		
BACB30GY				0.074		0.095		0.107		0.122		
BACB30TY				0.074		0.095		0.107		0.122		
BACB30UC				0.074		0.095		0.107		0.122		

MINIMUM SHEET THICKNESS FOR COUNTERSINKING OF 100° HEAD FASTENERS
TABLE I

Minimum Sheet Thickness for Countersinking of Fasteners
Figure 7 (Sheet 2)

BOEING PROPRIETARY - Copyright © - Unpublished Work - See title page for details.

EXAMPLE OF MINIMUM SHEET THICKNESS FOR COUNTERSUNK FASTENERS (T)												
FASTENER DESCRIPTION	NOMINAL FASTENER DIAMETER (D)											
	3/32	1/8	5/32	3/16	7/32	1/4	9/32	5/16	11/32	3/8	13/32	7/16
BOLT - REMOVABLE												
BACB30UW				0.072		0.095		0.105		0.122		0.150
BACB30VF				0.072		0.095		0.105		0.120		0.150
NAS87()		0.059		0.074		0.095		0.105		0.122		0.152
BACB30XD				0.104		0.141		0.158		0.200		
BACB30LH				0.125		0.168		0.209		0.251		0.293
BACB30LH (1/64 OVERSIZE)				0.116		0.159		0.200		0.242		0.284
BACB30LH (1/32 OVERSIZE)				0.105		0.149		0.189		0.231		0.273
BACB30LR				0.072		0.095		0.105		0.122		0.150
BACB30LR (1/64 OVERSIZE)				0.063		0.159		0.200		0.242		0.284
BACB30LR (1/32 OVERSIZE)				0.072		0.149		0.189		0.231		0.273
BACB30NN				0.125		0.168		0.209		0.251		0.293
BACB30PC						0.168		0.209		0.251		0.293
BACB30LU		0.092	0.108	0.125		0.168		0.209		0.251		0.293
BACB30LU (1/64 OVERSIZE)				0.116		0.159		0.200		0.242		0.284
BACB30LU (1/32 OVERSIZE)				0.105		0.149		0.189		0.231		0.273
BACB30MS				0.125		0.168		0.209		0.251		0.293
BACB30EL				0.075		0.096		0.108		0.123		0.153
BACB30NU				0.065		0.087		0.098		0.114		0.143
BACB30NU (1/64 OVERSIZE)				0.065		0.087		0.098		0.114		0.143
BACB30NU (1/32 OVERSIZE)				0.072		0.095		0.105		0.122		0.150
BACB30LL				0.072		0.095		0.105		0.122		0.150
BACB30LL (1/64 OVERSIZE)				0.063		0.086		0.096		0.113		0.141
BACB30LL (1/32 OVERSIZE)				0.072		0.095		0.105		0.122		0.150
BACB30RF				0.072		0.095		0.105		0.122		0.150
BACB30RF (1/64 OVERSIZE)				0.063		0.086		0.096		0.111		0.141
BACB30RF (1/32 OVERSIZE)				0.072		0.095		0.105		0.122		0.150
BACB30LP				0.125		0.168		0.209		0.251		0.293
BACB30LP (1/64 OVERSIZE)				0.116		0.159		0.200		0.242		0.284
BACB30LP (1/32 OVERSIZE)				0.105		0.149		0.189		0.231		0.273
BACB30TP				0.125								
BOLT - RADIUS LEAD-IN												
BACB30PT						0.105		0.120		0.135		
BACB30WQ				0.074		0.095		0.107		0.123		0.150

MINIMUM SHEET THICKNESS FOR COUNTERSINKING OF 100° HEAD FASTENERS
TABLE I (CONTINUED)

Minimum Sheet Thickness for Countersinking of Fasteners
Figure 7 (Sheet 3)

BOEING PROPRIETARY - Copyright © - Unpublished Work - See title page for details.

EXAMPLE OF MINIMUM SHEET THICKNESS FOR COUNTERSUNK FASTENERS (T)												
FASTENER DESCRIPTION	NOMINAL FASTENER DIAMETER (D)											
	3/32	1/8	5/32	3/16	7/32	1/4	9/32	5/16	11/32	3/8	13/32	7/16
BOLT - BLIND												
BACB30VK			0.059	0.065		0.086						
MS90353			0.108	0.120		0.158		0.206		0.248		0.290
MS21140			0.111	0.123		0.162		0.210		0.252		
RIVET - BLIND												
BACR15DR AND MS20605	0.054	0.063	0.083	0.105		0.143						
NAS1739		0.053	0.071	0.095								
BACR15FP		0.053	0.071	0.095								
NAS1399		0.063	0.083	0.105		0.143						
RIVET - SOLID SHANK												
NAS1200	0.032	0.044	0.056	0.069		0.090						
BACR15CE AND NAS1097	0.036	0.045	0.059	0.072		0.093						
BACR15DS					0.069		0.092					
BACR15GF	0.032	0.042	0.056	0.068	0.068	0.090	0.090	0.110				
BACR15BA	0.057	0.068	0.087	0.110		0.149		0.165		0.209		0.242
MS20426 AND MS20427	0.063	0.072	0.092	0.115		0.155		0.172		0.215		
BACR15AD					0.219		0.281		0.344		0.406	
BACR15FH BACR15GH TYPE IV			0.105	0.128		0.150		0.165		0.180		0.195
BACR15FH BACR15GH TYPE V			0.105	0.128		0.168		0.207		0.246		0.246
SCREW												
BACS12BP				0.120		0.159		0.200		0.239		
BACS12ER				0.120		0.159		0.200		0.239		
BACS12GP				0.120								
NAS514				0.120		0.159		0.200		0.239		
MS24693				0.125		0.165		0.207		0.248		

MINIMUM SHEET THICKNESS FOR COUNTERSINKING OF 100° HEAD FASTENERS

TABLE I (CONTINUED)

Minimum Sheet Thickness for Countersinking of Fasteners
Figure 7 (Sheet 4)

BOEING PROPRIETARY - Copyright © - Unpublished Work - See title page for details.

COLD WORKING OF HOLES FOR FATIGUE INPROVEMENT

CAUTION: COLD WORKING OF PARTS MACHINED FROM 7050-T74XX AND 7050-T76XX PLATE OR FORGED BLOCKS IS PERMITTED ONLY IF THE CENTERLINE OF THE HOLES ARE ORIENTED IN THE ST (SHORT TRANSVERSE) GRAIN DIRECTION. THE GRAIN DIRECTION IN 7050-T74XX AND 7050-T76XX PARTS MUST BE DETERMINED BEFORE COLD WORKING SO THAT COLD WORKING IN THE WRONG DIRECTION IS NOT DONE. CARE MUST BE TAKEN WITH 7050-T74XX AND 7050-T76XX FINISHED MACHINE PARTS THAT HAVE SIMILAR FLANGES, SUCH AS ANGLES, TO DETERMINE THE GRAIN DIRECTION RELATIVE TO EACH FLANGE BEFORE COLD WORKING.

1. General

NOTE: See Fig. 9 for the cold working limits in 7050-T74XX and 7050-T76XX materials.

A. Cold working of fastener holes is employed to improve joint fatigue properties by compressing the material around the periphery of these holes. This is achieved by pulling a mandrel through an undersize hole, thus enlarging the hole and compressing the metal, and then sizing the hole to final dimensions. The cold working operation causes a radial plastic flow of material and produces a residual compressive stress in the area surrounding the hole which, in the case of the high interference cold working process, extends approximately one radius from the edge of the hole. The magnitude of this compressive stress will be roughly equal to or greater than 2/3 the yield strength of the material. It is this compressive stress region which provides fatigue protection for the fastener hole, and its development is dependent upon adequate edge margin. The cold working operation also causes a residual tensile stress (beyond the region of residual compressive stress) which decreases as the radial distance from the fastener hole edge increases, unless the edge margin is too narrow. In this case, if the tensile residual stress at the free edge is sufficiently high to equal the material yield strength, its presence can result in stress corrosion cracking. To avoid this effect, it is important to maintain an adequate edge margin.

B. There are two cold working processes which are being implemented in the aerospace industry today: the split sleeve cold expansion process and the sleeveless cold working process. The split sleeve cold expansion process has been implemented since the early 1970's and its success is mainly due to the film lubricant on the internal surface of the sleeve. The process involves expanding a pre-existing hole by passing a tapered interference mandrel through a hole lined with a longitudinally split, disposable steel sleeve. The sleeveless cold working process has been implemented by large airframe manufacturers, whenever applicable, mainly because it eliminates the need for split sleeves and reduces labor.

BOEING PROPRIETARY - Copyright © - Unpublished Work - See title page for details.

C. There are two classes used in both cold working processes: class I (the high interference class) and class II (the low interference class). These classes differ by the percentage of interference set between the tooling and the starting hole, which means the degree to which a metal is compressed. For the high interference split sleeve cold expansion process, subsequent sizing of the cold-worked hole is required to meet drawing or repair requirements, whereas post-cold-work sizing is very limited for the low interference split sleeve cold working process. For the high interference sleeveless cold working process, a collapsible mandrel is inserted into the hole, then a pilot is inserted into the hollow part of the mandrel (to fill the hollow portion and to expand the mandrel), then both the mandrel and the pilot are pulled through the hole to cold work it. Class I sleeveless cold working is generally performed in, but not limited to, 2000 series aluminum alloys. For the class II sleeveless cold working process, a tapered mandrel is either pulled, pushed or driven through the hole requiring cold working.

D. To obtain desired joint fatigue properties, an edge margin of 1.5 times the hole diameter is required for low interference cold worked holes. This edge margin value is increased to 2 times the hole diameter for high interference cold worked holes. Smaller edge margins might result in stress corrosion cracking or less compressive and/or residual tensile stresses around the hole. An edge margin is defined as the ratio of the distance between the center of the hole and the edge of the part to the final hole diameter.

E. Any countersinking or countersink enlargement necessary should not be carried out until the cold working process has been completed.

F. High interference cold working can not be used in place of low interference cold working when low interference cold working is called out on Engineering drawings or in the SRM. Contact with The Boeing Company is required to obtain approval on a case-by-case basis for such substitution.

G. Where broaches are used to provide close tolerance holes, a suitable broach puller will be required.

H. Puller Kits MITBAC5973 and 2MITBAC5973 require a hydraulic power source such as 4MITBAC5973 or equivalent. An alternative to the straight pullers supplied in MITBAC5973 and 2MITBAC5973 is the small Angle Puller Kit 3MITBAC5973.

I. For suppliers of cold working tools, see Fig. 8.

J. For the high interference sleeve cold working process, refer to par. 2 for a description of cold working operations and hole inspection criteria.

(1) If cold working tools (durable tooling: pullers, adapters and powerpaks) listed in Fig. 1 are available or can be easily acquired for use, refer to Fig. 1 to select the appropriate durable and expendable tooling and hole sizes for a given fastener size.

(2) If difficulties are encountered when ordering cold working tools listed in Fig. 1 for nominal fastener sizes up to 15/16 inch, refer to Fig. 2 to select the appropriate durable and expendable tooling and hole sizes for a given fastener size.

K. High interference sleeveless cold working can be used instead of high interference sleeve cold working if the nominal hole diameter being considered is any one of the following sizes in inches: 1/4, 5/16 and 3/8. In such cases, refer to par. 4.

L. If a low interference split sleeve cold working process is required for a particular application, refer to par. 3.

2. High Interference Sleeve Cold Working Process

A. The sequence of operations for the high interference split sleeve cold working process is as follows. A simplified pictorial sequence of operations is shown in Fig. 1.

(1) Ensure that the parts to be cold worked are firmly held together by clamps or fasteners. It should not be possible to insert a 0.002-inch feeler gage between parts and contact a fastener.

(2) Enlarge the existing hole or introduce a new hole as appropriate to the required starting hole size shown in Fig. 1, Table I or in Fig. 2, Table I or II depending on the conditions of par. 1.J for the size of fastener to be used. To achieve a hole within the tolerance given with the required surface finish of 125 microinches or better, reaming or broaching will normally be necessary. Cetyl alcohol or lauric acid may be used as a lubricant.

NOTE: Hole inspection criteria for starting holes are the same as those specified for finished holes as described in par. 2.B.

(3) Select the appropriate tools from Fig. 1, Table II or III or from Fig. 2, Table III or IV depending on the conditions of paragraph 1.J. The length of disposable sleeve selected must be equal to or greater than the thickness of material to be cold worked.

CAUTION: AVOID GETTING LUBRICANT ON THE OUTSIDE OF THE SLEEVE. DAMAGE TO EQUIPMENT MAY RESULT.

(4) Slide the sleeve over the mandrel up to the nose piece of the puller.

(5) Insert the mandrel and sleeve into the hole.

(6) Actuate the puller to pull the mandrel through the sleeve.

(7) Remove the sleeve from the hole and discard it.

(8) Broach or ream the hole to the finished hole size specified in Fig. 1, Table IA with a surface finish of 125 microinches or better. A suitable broach puller will be required for use with the broach. Cetyl alcohol or lauric acid may be used as a lubricant.

B. Inspect the hole to ensure that it meets the following criteria:

(1) Holes shall be normal to the surface within 2 degrees.

(2) Holes shall be free from burrs at the interface.

(3) Holes shall be free from scratches, nicks or cuts with the exception of the following surface defects which are acceptable:

(a) Circumferential scratches which are a minimum of 1/16 inch or 10% of the part thickness from the surface of the part, whichever is smaller.

(b) Helical scratches which are a minimum of 1/16 inch or 25% of the part thickness from the surface of the part, whichever is smaller.

(c) Longitudinal scratches not more than 50% of length of hole in any one part and which neither start nor end within 1/16 inch or 25% of the part thickness from the surface of the part, whichever is smaller.

(d) Surface roughness which does not exceed 125 microinches.

(e) The finished hole may contain a region near the entry, exit or interface that does not totally clean up during the sizing operation. The hole will be acceptable provided the region does not extend 0.020 inch or 10% of the detail thickness, whichever is less.

C. Holes failing to meet the inspection requirements may be enlarged to the diameters listed in Fig. 1, Table I or in Fig. 2, Table I or II, without re-cold working, depending on the conditions of par. 1.J.

3. Low Interference Sleeve Cold Working Process

A. Low interference cold working may be achieved either with or without a sleeve interposed between the mandrel and the hole. Use of the sleeveless process is not recommended. The sequence of operations is as follows. A simplified pictorial sequence of operations is shown in Fig. 3.

(1) Ensure that the parts to be cold worked are firmly held together by clamps or fasteners. It should not be possible to insert a 0.002-inch feeler gage between parts and contact a fastener.

(2) Enlarge the existing hole, or introduce a new hole as appropriate, to the required starting hole size shown in Fig. 3, Table I for the size of fastener to be used. A finish of 125 microinches is required where the sleeve process is to be used. Reaming or broaching will be required to achieve the tolerance and finish required. Cetyl alcohol or lauric acid may be used as a lubricant.

NOTE: Hole inspection criteria for starting holes are the same as those specified for finished holes as described in par. 3.B except for the finish requirement presented above.

(3) Select the appropriate tools from Fig. 3, Table III, IV or V. The length of disposable sleeve selected must be equal to or greater than the thickness of material to be cold worked.

CAUTION: AVOID GETTING LUBRICANT ON THE OUTSIDE OF THE SLEEVE. DAMAGE TO EQUIPMENT MAY RESULT.

(4) Slide the sleeve over the mandrel up to the nose piece of the puller.

(5) Insert the mandrel and sleeve assembly into the hole.

(6) Actuate the puller to pull the mandrel through the hole.

(7) Remove the sleeve from the hole and discard it.

(8) The hole should not require any further work unless it fails to meet the inspection requirements of par. 3.B.

B. Inspect the hole to ensure that it meets the following criteria:

(1) Hole shall be normal to the surface within 2 degrees unless otherwise specified.

(2) A surface finish of 125 microinches or better is required.

(3) Tapering of the hole is acceptable provided that it does not exceed a maximum of 0.001 inch above the maximum diameter of the finished hole size.

(4) Longitudinal ridges left by cold working sleeves are acceptable.

(5) Holes shall be free from longitudinal scratches and rifling which intersect the shear plane.

4. High Interference Sleeveless Cold Working Process

A. This process is characterized by approximately 5 percent interference between the tooling and the starting hole. Subsequent sizing of the cold worked hole must meet drawing or repair requirements. Class I sleeveless cold working is generally performed in, but not limited to, 2000 series alloys. The sequence of operations is as follows. A simplified pictorial sequence of operations is shown in Fig. 4.

(1) Ensure that the parts to be cold worked are firmly held together by clamps or fasteners. It should not be possible to insert a 0.002 inch feeler gage between parts and contact a fastener.

(2) Enlarge the existing hole, or introduce a new hole as appropriate to the required starting hole size shown in Fig. 4, Table I for the size of fastener to be used. A surface roughness of 125 microinches or better is required for this process. Use the appropriate starting drills and reamers in Fig. 4, Table II for reaming might be necessary to achieve the hole tolerance and finish required. Always inspect first hole for size and finish using the starting hole gauge listed in Fig. 4, Table II.

(3) Red Boelube 100A, in accordance with BAC 5008, is required to be applied to the entire surface of the starting hole prior to cold working. Without adequate lubrication, mandrels could stick in the hole causing equipment damage. Lubricating a hole may be done in two ways:

(a) Manually by using a hole lubricator per ST 5300-CML or

(b) Automatically by using a Boelube pump which mounts on a hydraulic power supply (Fig. 7) and supplies Boelube to a felt wiper in the puller nosecap. Felt wipers should be replaced when they no longer deposit Boelube on 360° of the mandrel.

(4) Select the appropriate tools from Fig. 4, Table II or any commercially available equivalent.

NOTE: The class I process is tooling critical and requires the use and verification of proper tools.

(5) The mandrel used to cold work Class I holes shall be as shown in Fig. 5. The collapsible mandrel shall be pulled only. The inspection gages used to inspect new and worn mandrels are of the ST5300-CMG and ST5300-CMGA series respectively. A mandrel/pilot combination is satisfactory for use if it will not pass through the NO-GO hole for used mandrels. The pilot must be in the support position (forward on the WCI-300 puller) for a valid check. Also, select proper pilot and nosecap from Fig. 4, Table II.

(6) Refer to Fig. 6 for mandrel and pilot installation.

(a) Unscrew the check valve body from the nosecap. Loosen 3 setscrews and remove nosecap. Insert a pin through barrel into the mandrel adapter. The mandrel can now be unscrewed from the mandrel adapter.

(b) Pilots in the WCI-300 puller are replaced using a pilot wrench listed in Fig. 4, Table II. The outer tube (with its thumb wheel) prevents the pilot piston from turning while the inner tube and thumb wheel turn the pilot.

(7) Install pilot, mandrel, and nosecap on puller gun.

(8) Insert the mandrel into a pre-lubricated hole until the nosecap of a WCI-300 puller contacts the panel.

(9) Pull the trigger and release. The puller will complete the cycle. The hole should have a small ridge if a straight slot mandrel was used; otherwise, a clean bore coldworked hole is expected from the cold working operation.

(10) Final ream the hole to the dimensions given in Fig. 4, Table I, making use of the final sizing reamers given in Fig. 4, Table II.

B. Inspect the hole to ensure that it meets the following criteria:

(1) Hole characteristics shall be inspected for conformance to requirements as shown in Fig. 4, Table III.

(2) Cracks due to cold working that are visible without magnification are cause for rejection.

(3) The hole after final reaming may contain a region near the entry, exit, or interface that does not totally cleanup during the reaming operation. The hole will be acceptable provided the region does not extend more than 0.020 inch or 10 percent of the detail thickness, whichever is less.

(4) Any cold worked hole which must be oversized shall be re-cold worked.

(5) Faying surface separation between holes after cold working is allowed, provided it does not extend to the edge of the hole. Passage of a 0.005 inch shim along the faying surface to a point where it contacts the shank of a fastener installed in the hole shall be cause for rejection.

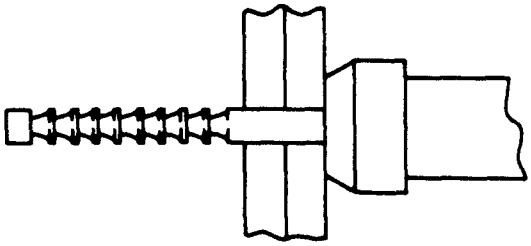

STEP 1 BROACH OR REAM HOLE TO STARTING SIZE SHOWN IN TABLE 1

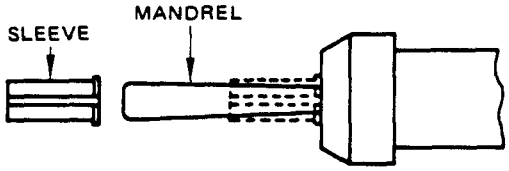

STEP 2 SLIDE SLEEVE OVER MANDREL UP TO NOSE PIECE OF PULLER

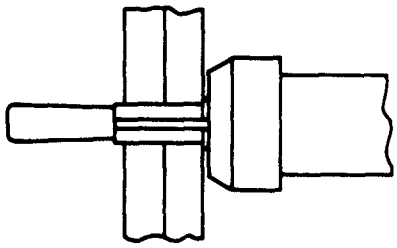

STEP 3 INSERT MANDREL AND SLEEVE INTO HOLE

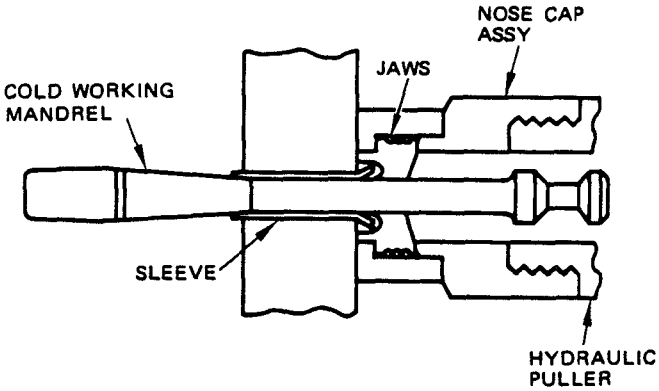

TYPICAL ASSEMBLY
(PRIOR TO COLD WORKING)

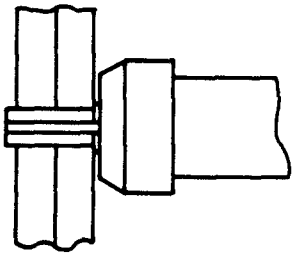

STEP 4 ACTUATE PULLER TO PULL MANDREL THROUGH SLEEVE

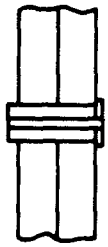

STEP 5 REMOVE AND DISCARD SLEEVE

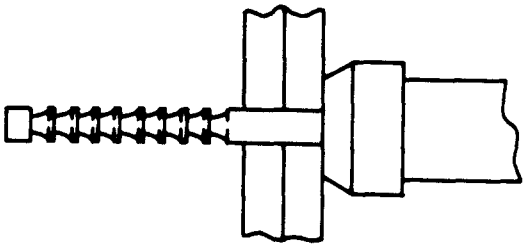

STEP 6 BROACH OR REAM HOLE TO FINAL SIZE SHOWN IN TABLE 1

SIMPLIFIED SEQUENCE OF OPERATIONS
(REFER TO TEXT FOR COMPREHENSIVE SEQUENCE OF OPERATIONS)

High Interference Sleeve Cold Working Process
Figure 1 (Sheet 1)

NOM FASTENER SIZE [K]	STARTING HOLE SIZE	MAXIMUM ALLOWABLE HOLE SIZE
5/32	0.146 0.143	0.1720
11/64 *	0.162 0.159	0.1880
3/16	0.180 0.177	0.2060
13/64 *	0.195 0.192	0.2220
7/32 *	0.212 0.209	0.2390
15/64 *	0.228 0.225	0.2550
1/4	0.238 0.235	0.2655
17/64 *	0.254 0.251	0.2815
9/32 *	0.269 0.266	0.2970
19/64 *	0.286 0.283	0.3140
5/16	0.300 0.297	0.3290
21/64 *	0.316 0.313	0.3450
11/32 *	0.331 0.328	0.3605
23/64 *	0.347 0.344	0.3765
3/8	0.362 0.359	0.3920
25/64 *	0.378 0.375	0.4080
13/32 *	0.394 0.391	0.4245
27/64 *	0.409 0.406	0.4400
7/16	0.424 0.421	0.4555
29/64 *	0.440 0.437	0.4715
15/32 *	0.453 0.450	0.4855
31/64 *	0.468 0.465	0.5005
1/2	0.477 0.474	0.5280
33/64 *	0.493 0.490	0.5440
17/32 *	0.508 0.505	0.5595

NOM FASTENER SIZE [K]	STARTING HOLE SIZE	MAXIMUM ALLOWABLE HOLE SIZE
35/64 *	0.524 0.521	0.5755
9/16	0.540 0.537	0.5920
37/64 *	0.556 0.553	0.6080
19/32 *	0.571 0.568	0.6235
39/64 *	0.586 0.583	0.6390
5/8	0.600 0.597	0.6562
41/64 *	0.616 0.613	0.6719
21/32 *	0.634 0.631	0.6875
43/64 *	0.649 0.646	0.7040
11/16	0.662 0.659	0.7188
45/64 *	0.678 0.675	0.7344
23/32 *	0.693 0.690	0.7500
47/64 *	0.709 0.706	0.7657
3/4	0.721 0.718	0.7812
49/64 *	0.737 0.734	0.7968
25/32 *	0.752 0.749	0.8125
51/64 *	0.768 0.765	0.8281
13/16	0.785 0.782	0.8437
53/64 *	0.801 0.798	0.8594
27/32 *	0.814 0.811	0.8750
55/64 *	0.829 0.826	0.8906
7/8	0.844 0.841	0.9062
57/64 *	0.860 0.857	0.9218
29/32 *	0.882 0.879	0.9420
59/64 *	0.897 0.894	0.9575

HOLE SIZES FOR HIGH INTERFERENCE COLD-WORKED HOLES

TABLE I

* = OVERSIZE REPAIR FASTENER

High Interference Sleeve Cold Working Process
Figure 1 (Sheet 2)

NOM FASTENER SIZE [K]	STARTING HOLE SIZE	MAXIMUM ALLOWABLE HOLE SIZE
15/16	0.904 0.901	0.9910
61/64 *	0.920 0.917	1.0067
31/32 *	0.936 0.933	1.0230
63/64 *	0.952 0.949	1.0390
1	0.968 0.965	1.0468
1	0.952 0.949 [G]	
1–1/64 *	0.984 0.981	1.0650
1–1/64 *	0.968 0.965 [G]	
1–1/32 *	1.000 0.997	1.0780
1–3/64 *	1.016 1.013	1.1050
1–1/8	1.078 1.075	1.1700
1–1/8	1.062 1.059 [G]	
1–9/64 *	1.094 1.091	1.1860
1–9/64 *	1.078 1.075 [G]	
1–5/32 *	1.110 1.107	1.2020
1–11/64 *	1.126 1.123	1.2180
1–3/16	1.140 1.136	1.2320
1–3/16	1.124 1.120 [G]	
1–13/64 *	1.156 1.152	1.2480
1–13/64 *	1.139 1.136 [G]	
1–7/32 *	1.172 1.168	1.2640
1–15/64 *	1.188 1.184	1.2800
1–1/4	1.203 1.199	1.2970
1–1/4	1.187 1.183 [G]	
1–17/64 *	1.219 1.215	1.3130

NOM FASTENER SIZE [K]	STARTING HOLE SIZE	MAXIMUM ALLOWABLE HOLE SIZE
1–17/64 *	1.202 1.199 [G]	
1–9/32 *	1.235 1.231	1.3290
1–19/64 *	1.251 1.247	1.3450
1–3/8	1.320 1.316	1.4218
1–3/8	1.304 1.300 [G]	
1–25/64 *	1.340 1.336	1.4375
1–25/64 *	1.324 1.320 [G]	
1–13/32 *	1.356 1.352	1.4531
1–27/64 *	1.372 1.368	1.4687
1–1/2	1.431 1.427	1.5468
1–1/2	1.415 1.411 [G]	
1–33/64 *	1.447 1.443	1.5625
1–33/64 *	1.431 1.427 [G]	
1–17/32 *	1.463 1.459	1.5781
1–35/64 *	1.479 1.475	1.5937
1–5/8	1.563 1.559	1.6718
1–5/8	1.547 1.543 [G]	
1–41/64 *	1.579 1.575	1.6875
1–41/64 *	1.563 1.559 [G]	
1–21/32 *	1.595 1.591	1.7031
1–43/64 *	1.611 1.607	1.7187
1 – 3/4	1.700 1.696	1.8110
1 – 49/64*	1.715 1.711	1.8260
1 – 25/32*	1.730 1.726	1.8420
1 – 51/64*	1.746 1.742	1.8575

HOLE SIZES FOR HIGH INTERFERENCE COLD–WORKED HOLES

* = OVERSIZE REPAIR FASTENER

TABLE I (CONT)

High Interference Sleeve Cold Working Process
Figure 1 (Sheet 3)

NOMINAL HOLE DIAMETER, INCHES	MAXIMUM PERMISSIBLE INCREASE IN DIAMETER DUE TO SIZING OPERATION, INCHES
5/32 TO 7/16	0.022
29/64 TO 7/8	0.040
LARGER THAN 7/8	0.066

FINISHED HOLE SIZE [J]
TABLE IA

High Interference Sleeve Cold Working Process
Figure 1 (Sheet 3A)

NOM FASTENER SIZE	MANDREL ST5300-CBM [F][I]	SLEEVE ST5300-CBS [A]	UNIVERSAL KIT NO. MITBAC 5973 [D]			UNIVERSAL KIT NO. 2MITBAC 5973 [D]		
			NOSE CAP ST5300-CBC	JAW ASSY ST5300-CBC [B]	CHUCK ASSY ST1350A	NOSE CAP ST1350A-C	JAW ASSY ST5300-CBC [B]	CHUCK ASSY ST5300-C
5/32	-5-0-N-"E"	-5-0-N-"A"-"B"	-3	-"C"-23	-29	-12	-"C"-23	-227
11/64	-5-1-N-"E"	-5-1-N-"A"-"B"						
3/16	-6-0-N-"E"	-6-0-N-"A"-"B"		-"C"-24			-"C"-24	
13/64	-6-1-N-"E"	-6-1-N-"A"-"B"						
7/32	-6-2-N-"E"	-6-2-N-"A"-"B"						
15/64	-6-3-N-"E"	-6-3-N-"A"-"B"						
1/4	-8-0-N-"E"	-8-0-N-"A"-"B"		-"C"-25			-"C"-25	
17/64	-8-1-N-"E"	-8-1-N-"A"-"B"						
9/32	-8-2-N-"E"	-8-2-N-"A"-"B"						
19/64	-8-3-N-"E"	-8-3-N-"A"-"B"						
5/16	-10-0-N-"E"	-10-0-N-"A"-"B"		-"C"-26			-"C"-26	
21/64	-10-1-N-"E"	-10-1-N-"A"-"B"						
11/32	-10-2-N-"E"	-10-2-N-"A"-"B"						
23/64	-10-3-N-"E"	-10-3-N-"A"-"B"						
3/8	-12-0-N-"E"	-12-0-N-"A"-"B"		-"C"-27			-"C"-27	
25/64	-12-1-N-"E"	-12-1-N-"A"-"B"						
13/32	-12-2-N-"E"	-12-2-N-"A"-"B"						
27/64	-12-3-N-"E"	-12-3-N-"A"-"B"						

COLD WORKING TOOLS FOR HOLES LESS THAN 7/16 INCH DIAMETER - HIGH INTERFERENCE, SLEEVE TYPE
TABLE II

High Interference Sleeve Cold Working Process
Figure 1 (Sheet 4)

NOM FASTENER SIZE	MANDREL ST5300-CBM [C][I]	SLEEVE ST5300-CBS [A]	UNIVERSAL KIT NO. 2 MITBAC 5973			
			NOSECAP ST1350A-C	JAW ASSY ST5300-CBC	CHUCK ASSY [E]	
					3-JAW ST1350A-C	THREADED ST1350A-C
7/16	-14-0-N-"D"	-14-0-N-"A"-"B"	-12	-28-S	-21	-33
29/64	-14-1-N-"D"	-14-1-N-"A"-B				
15/32	-14-2-N-"D"	-14-2-N-"A"-"B"				
31/64	-14-3-N-"D"	-14-3-N-"A"-"B"				
1/2	-16-0-N-"D"	-16-0-N-"A"-"B"		-29-S		
33/64	-16-1-N-"D"	-16-1-N-"A"-"B"				
17/32	-16-2-N-"D"	-16-2-N-"A"-"B"				
35/64	-16-3-N-"D"	-16-3-N-"A"-"B"				
9/16	-18-0-N-"D"	-18-0-N-"A"-"B"		-30-S		
37/64	-18-1-N-"D"	-18-1-N-"A"-"B"				
19/32	-18-2-N-"D"	-18-2-N-"A"-"B"				
39/64	-18-3-N-"D"	-18-3-N-"A"-"B"				
5/8	-20-0-N-"D"	-20-0-N-"A"-"B"		-31-S		
41/64	-20-1-N-"D"	-20-1-N-"A"-"B"				
21/32	-20-2-N-"D"	-20-2-N-"A"-"B"				
43/64	-20-3-N-"D"	-20-3-N-"A"-"B"				
11/16	-22-0-N-3	-22-0-N-"A"-"B"		-32-S		
45/64	-22-1-N-3	-22-1-N-"A"-"B"				
23/32	-22-2-N-3	-22-2-N-"A"-"B"				
47/64	-22-3-N-3	-22-3-N-"A"-"B"				
3/4	-24-0-N-3	-24-0-N-"A"-"B"		-33-S		
49/64	-24-1-N-3	-24-1-N-"A"-"B"				
25/32	-24-2-N-3	-24-2-N-"A"-"B"				
51/64	-24-3-N-3	-24-3-N-"A"-"B"				
13/16	-26-0-N-3	-26-0-N-"A"-"B"		-34-S		
53/64	-26-1-N-3	-26-1-N-"A"-"B"				
27/32	-26-2-N-3	-26-2-N-"A"-"B"				
55/64	-26-3-N-3	-26-3-N-"A"-"B"				
7/8	-28-0-N-3	-28-0-N-"A"-"B"		-35-S		
57/64	-28-1-N-3	-28-1-N-"A"-"B"				
29/64	-28-2-N-3	-28-2-N-"A"-"B"				
59/64	-28-3-N-3	-28-3-N-"A"-"B"				
15/16	-30-0-N-3	-30-0-N-"A"-"B"		-36-S		
61/64	-30-1-N-3	-30-1-N-"A"-"B"				

COLD WORKING TOOLS FOR HOLES 7/16 INCH DIAMETER AND GREATER - HIGH INTERFERENCE, SLEEVE TYPE

TABLE III

High Interference Sleeve Cold Working Process
Figure 1 (Sheet 5)

NOM FASTENER SIZE	MANDREL ST5300-CBM [C][I]	SLEEVE ST5300-CBS [A]	UNIVERSAL KIT NO. 2 MITBAC 5973			
			NOSECAP ST1350A-C	JAW ASSY ST5300-CBC	CHUCK ASSY [E]	
					3-JAW ST1350A-C	THREADED ST1350A-C
31/32	-30-2-N-3	-30-2-N-"A"-"B"	-12	-36-S		-33
63/64	-30-3-N-3	-30-3-N-"A"-"B"				
1	-32-0-N-3	-32-0-N-"A"-"B"		-305-S		
1 [H]	-32-0-S-3	-32-0-S-"A"-"B"				
1-1/64	-32-1-N-3	-32-1-N-"A"-"B"				
1-1/64 [H]	-32-1-S-3	-32-1-S-"A"-"B"				
1-1/32	-32-2-N-3	-32-2-N-"A"-"B"				
1-3/64	-32-3-N-3	-32-3-N-"A"-"B"				
1-1/8	-36-0-N-3	-36-0-N-"A"-"B"		-307-S		
1-1/8 [H]	-36-0-S-3	-36-0-S-"A"-"B"				
1-9/64	-36-1-N-3	-36-1-N-"A"-B"				
1-9/64 [H]	-36-1-S-3	-36-1-S-"A"-"B"				
1-5/32	-36-2-N-3	-36-2-N-"A"-"B"				
1-11/64	-36-3-N-3	-36-3-N-"A"-"B"				
1-3/16	-38-0-N-3	-38-0-N-"A"-"B"		-308-S		
1-3/16 [H]	-38-0-S-3	-38-0-S-"A"-"B"				
1-13/64	-38-1-N-3	-38-1-N-"A"-"B"				
1-13/64 [H]	-38-1-S-3	-38-1-S-"A"-"B"				
1-7/32	-38-2-N-3	-38-2-N-"A"-"B"				
1-15/64	-38-3-N-3	-38-3-N-"A"-"B"				
1-1/4	-40-0-N-3	-40-0-N-"A"-"B"		-309-S		
1-1/4 [H]	-40-0-S-3	-40-0-S-"A"-"B"				
1-17/64	-40-1-N-3	-40-1-N-"A"-"B"				
1-17/64 [H]	-40-1-S-3	-40-1-S-"A"-"B"				
1-9/32	-40-2-N-3	-40-2-N-"A"-"B"				
1-19/64	-40-3-N-3	-40-3-N-"A"-"B"				
1-3/8	-44-0-N-3	-44-0-N-"A"-"B"		-311-S		
1-3/8 [H]	-44-0-S-3	-44-0-S-"A"-"B"				
1-25/64	-44-1-N-3	-44-1-N-"A"-"B"				
1-25/64 [H]	-44-1-S-3	-44-1-S-"A"-"B"				
1-13/32	-44-2-N-3	-44-2-N-"A"-"B"				
1-27/64	-44-3-N-3	-44-3-N-"A"-"B"				
1-1/2	-48-0-N-3	-48-0-N-"A"-"B"		-313-S		
1-1/2 [H]	-48-0-S-3	-48-0-S-"A"-"B"				

COLD WORKING TOOLS FOR HOLES 7/16 INCH DIAMETER AND GREATER - HIGH INTERFERENCE, SLEEVE TYPE

TABLE III (CONT)

High Interference Sleeve Cold Working Process
Figure 1 (Sheet 6)

NOM FASTENER SIZE	MANDREL ST5300–CBM [C][I]	SLEEVE ST5300–CBS [A]	UNIVERSAL KIT NO. 2 MITBAC 5973			
			NOSECAP ST1350A–C	JAW ASSY ST5300–CBC	CHUCK ASSY [E]	
					3–JAW ST1350A–C	THREADED ST1350A–C
1–33/64	–48–1–N–3	–48–1–N–"A"–"B"	–12	–313–S		–33
1–33/64 [H]	–48–1–S–3	–48–1–S–"A"–"B"				
1–17/32	–48–2–N–3	–48–2–N–"A"–"B"				
1–35/64	–48–3–N–3	–48–3–N–"A"–"B"				
1–5/8	–52–0–N–3	–52–0–N–"A"–"B"				
1–5/8 [H]	–52–0–S–3	–52–0–S–"A"–"B"				
1–41/64	–52–1–N–3	–52–1–N–"A"–"B"				
1–41/64 [H]	–52–1–S–3	–52–1–S–"A"–"B"				
1–21/32	–52–2–N–3	–52–2–N–"A"–"B"				
1–43/64	–52–3–N–3	–52–3–N–"A"–"B"				

COLD WORKING TOOLS FOR HOLES 7/16 INCH DIAMETER AND GREATER – HIGH INTERFERENCE, SLEEVE TYPE

TABLE III (CONT)

High Interference Sleeve Cold Working Process
Figure 1 (Sheet 7)

NOTES

[A] "A" IS THE LENGTH OF THE SLEEVE IN 1/16 OF AN INCH WHICH MUST EQUAL OR EXCEED THE HOLE DEPTH. SLEEVES ARE MADE IN 1/4-INCH INCREMENTS ONLY, FROM 3/4 INCH TO 1-1/2 INCHES LONG. SLEEVES MAY BE STACKED FOR DEEP HOLES

"B" IS THE TYPE OF SLEEVE DENOTED BY THE SUFFIX "F" FOR FLARED TYPE OR "S" FOR STRAIGHT TYPE. FOR HOLES LESS THAN 7/16 DIA THE FLARED TYPE IS PREFERRED, BUT IF STACKED THE ADDITIONAL SLEEVES MUST BE OF THE STRAIGHT TYPE. FOR HOLE SIZES 7/16 DIA AND GREATER ONLY THE STRAIGHT TYPE WILL BE USED

EXAMPLE: ST5300CBS-10-0-N-8-F

THIS IS A FLARED SLEEVE (INDICATED BY -F) FOR A 5/16 DIA HOLE WITH A LENGTH OF 1/2 INCH (INDICATED BY -8)

[B] "C" IS THE TYPE OF JAW ASSY REQUIRED TO SUIT THE TYPE OF SLEEVE BEING USED. USE THE SUFFIX "F" FOR FLARED TYPE OR "S" FOR STRAIGHT TYPE

[C] "D" IS THE TYPE OF MADREL REQUIRED TO SUIT THE CHUCK. SPECIFY 2 FOR THE TYPE II MANDRELS USED WITH A 3-JAW CHUCK OR 3 FOR THE TYPE III MANDRELS USED WITH A THREADED CHUCK. TYPE III MANDRELS ARE REQUIRED FOR HOLES 11/16 DIA AND LARGER

EXAMPLE: ST5300-CBM-18-0-N-2

THIS IS A MANDREL FOR A 9/16-INCH DIAMETER HOLE FOR USE WITH A 3-JAW CHUCK (INDICATED BY -2)

[D] KITS 2MITBAC5973 AND 3MITBAC5973 ARE ALTERNATIVES FOR KIT MITBAC5973.

KITS MITBAC5973 AND 3MITBAC5973 ARE ALTERNATIVES FOR KIT 2MITBAC5973.

[E] 3-JAW CHUCKS OR THREADED CHUCKS ARE ALTERNATIVES FOR SIZES LESS THAN 11/16-INCH DIAMETER.

[F] "E" IS THE TYPE OF MANDREL REQUIRED TO SUIT THE CHUCK. SPECIFY 1 FOR THE TYPE I MANDRELS USED WITH A 3-JAW CHUCK OR 1A FOR THE TYPE 1A MANDRELS USED WITH A THREADED CHUCK.

EXAMPLE: ST5300-CBS-12-0-N-1

THIS IS A MANDREL FOR A 3/8-INCH DIAMETER HOLE FOR USE WITH A 3-JAW CHUCK (INDICATED BY -1)

[G] STARTING HOLE SIZE FOR SPECIAL SLEEVES.

[H] INDICATIVE OF SPECIAL MANDRELS TO BE USED IN CONJUNCTION WITH SPECIAL SLEEVES.

[I] MANDREL MATERIAL MUST BE SPECIFIED. SPECIFY H FOR H-11 OR H-13 TOOL STEEL. USE H-11 or H-13 (H) TOOL STEEL FOR COLD WORKING HOLES IN ALUMINUM. USE VASCOJET (V) TOOL STEEL FOR COLD WORKING HOLES IN STEEL OR ALUMINUM.

EXAMPLE: ST5300-CBM-22-0-N-3-V

THIS IS A MANDREL MADE FROM VASCOJET TOOL STEEL.

[J] AFTER COLD WORKING, HOLES ARE INTENTIONALLY UNDERSIZE TO PERMIT CLEAN-UP OF TAPER. THEY MUST BE BROACHED OR REAMED TO SIZES APPROPRIATE TO THE FASTENERS BEING INSTALLED. REFER TO 51-30-5, FIG. 1 FOR HOLE DIMENSIONS, UNLESS HOLE SIZE IS SPECIFIED ON DRAWING OR REPAIR. MAXIMUM METAL REMOVAL PERMITTED IS SHOWN IN TABLE IA.

High Interference Sleeve Cold Working Process
Figure 1 (Sheet 8)

NOTES (CONT)

K IN SOME CONDITIONS, IT IS PERMITTED TO DO THESE STEPS:

1. COLD WORK THE HOLE AS IF THE FINISHED HOLE DIAMETER WAS 1/64 SMALLER.

2. REAM THE HOLE TO THE CORRECT FINISHED DIAMETER. THE FINISHED DIAMETER MUST NOT BE LARGER THAN THE MAXIMUM PERMITTED HOLE DIAMETER.

High Interference Sleeve Cold Working Process
Figure 1 (Sheet 9)

TOOL CODE	EXISTING HOLE DIAMETER [A]	STARTING HOLE DIAMETER		APPROXIMATE HOLE DIAMETER AFTER COLD WORKING [B]	RECOMMENDED FASTENER [C]	FINAL HOLE DIAMETER			
						TRANSITION FIT		MAX. ALLOWABLE [D]	
		MIN	MAX			MIN	MAX	DECIMAL	FRACT.
R30	5/32	0.169	0.171	0.173	3/16	0.187	0.190	0.206	13/64
R32	3/16	0.199	0.202	0.205	7/32	0.216	0.219	0.239	15/64
R40	7/32	0.229	0.232	0.236	1/4	0.247	0.250	0.2655	17/64
R42	1/4	0.260	0.263	0.268	9/32	0.278	0.281	0.2970	19/64
R50	9/32	0.290	0.293	0.299	5/16	0.309	0.313	0.329	21/64
R52	5/16	0.322	0.325	0.332	11/32	0.341	0.344	0.3605	23/64
R60	11/32	0.352	0.355	0.363	3/8	0.371	0.375	0.392	25/64
R62	3/8	0.383	0.386	0.394	13/32	0.403	0.406	0.4245	27/64

HOLE SIZES FOR FASTENERS LESS THAN 7/16 INCH DIAMETER
TABLE I

Alternate High Interference Sleeve Cold Working Process
Figure 2 (Sheet 1)

274403

TOOL CODE	MAXIMUM EXISTING HOLE DIAMETER [F]	STARTING HOLE DIAMETER		APPROXIMATE HOLE DIAMETER AFTER COLD WORKING [E]	RECOMMENDED FASTENER	FINAL HOLE DIAMETER			
						REQUIRED FINISHED HOLE DIA.		MAX. ALLOWABLE [D]	
		MIN	MAX			MIN	MAX	DECIMAL	FRACT.
14-0-N	0.410	0.421	0.424	0.431	7/16	0.4340	0.4490	0.4555	29/64
16-0-N	0.469	0.474	0.477	0.486	1/2	0.4960	0.5119	0.5280	33/64
18-0-N	0.531	0.537	0.540	0.550	9/16	0.5580	0.5739	0.5920	37/64
20-0-N	0.587	0.597	0.600	0.612	5/8	0.6210	0.6364	0.6562	21/32
24-0-N	0.708	0.718	0.721	0.736	3/4	0.7460	0.7614	0.7812	25/32
28-0-N	0.831	0.841	0.844	0.862	7/8	0.8710	0.8864	0.9062	29/32
30-0-N	0.891	0.901	0.904	0.923	15/16	0.9345	0.9499	0.9910	63/64

HOLE SIZES FOR FASTENERS GREATER THAN 13/32 AND LESS THAN 1 INCH DIAMETER
TABLE II

Alternate High Interference Sleeve Cold Working Process
Figure 2 (Sheet 2)

274557

TYPES OF HOLES			KIT CXORK-2A/B [I] [L] [P] KIT CWORK-2B [R]	TOOL CODE			
				R30		R32	
STRAIGHT HOLES	EXISTING COUNTERSUNK HOLES [K]	RESTRICTED ACCESS HOLES	EXPENDABLE TOOLING SET	CRTS-R30-1-186 [P]	CWRK-R30-1 [R]	CRTS-R2-1-215 [P]	CWRK-R32-1 [R]
•		•	STARTING DRILL [H]	CRSD-R30-1	WCI-SD-R30-1	CRSD-R32-1	WCI-SD-R32-1
•	•	•	STARTING REAMER	CRSR-R30-1-169	WCI-SR-R30-1-169	CRSR-R32-1-199	WCI-SR-R32-1-199
•	•	•	COMBINATION GAGE		WCI-CBG-R30-1		WCI-CBG-R32-1
•	•	•	STARTING HOLE GAGE	CRSG-R30-1		CRSG-R32-1	
•	•	•	MANDREL GAGE	CRMG-R30-1	WCI-WG-R30-1	CRMG-R32-1	WCI-WG-R32-1
•	•		COUNTERSINK MANDREL	KRM-R30-1		KRM-R32-1	
•	•		EXTENSION MANDREL		WCI-ORM-R30-1-30		WCI-ORM-R32-1-30
		•	OFFSET MANDREL	CRM-R30-1	WCI-ADM-R30-1-20	CRM-R32-1	WCI-ADM-R32-1-20
	•		STRAIGHT SPLIT SLEEVE	CRS-R30-24S		CRS-R32-24S	
•		•	FLARED SPLIT SLEEVE	CRS-R30-16F	CBS-R30-16F	CRS-R32-16F	CBS-R32-16F
•	•	•	VERIFICATION GAGE	CRVG-R30-1		CRVG-R32-1	
•	•	•	FINAL REAMER	CRR-R30-1-186	WCI-FR-R30-1-186	CRR-R32-1-215	WCI-FR-R32-1-215
•	•	•	FINAL GAGE	CRFG-R30-1-186	WCI-FHG-R30-1-186	CRFG-R32-1-215	WCI-FHG-R32-1-215
•			EXTENSION NOSECAP	CRCE-R30-1	WCI-1700NE-R30-20F	CRCE-R32-1	WCI-1700NE-R32-20F
		•	OFFSET NOSECAP	CRC-R30-1	WCI-1700-OA-7-R30	CRC-R32-1	WCI-1700-OA-7-R32
	•		COUNTERSINK NOSECAP	KRC-R30-1		KRC-R32-1	
	• [J]		BACKUP BLOCK	KRBB-R30-1		KRBB-R32-1	
•	•	•	PULLER UNIT	LB-20	WCI-1700-20	LB-20	WCI-1700-20
•	•	•	POWERPAK	(IW100MF OR IW10MF) [P] OR 4MITBAC5973 [Q]	WCI-20	(IW100MF OR IW10MF) [P] OR 4MITBAC5973 [Q]	WCI-20
		•	OFFSET ADAPTER	LBOA-20 [N]	WCI-1700-OA-20	LB-20 [N]	WCI-1700-OA-20

COLD WORKING TOOLS FOR HOLES LESS THAN 7/16 INCH DIAMETER - HIGH INTERFERENCE SLEEVE TYPE
TABLE III

Alternate High Interference Sleeve Cold Working Process
Figure 2 (Sheet 3)

TYPES OF HOLES			KIT CXORK-2A/B [I] [L] [P] KIT CWORK-2B [R]	TOOL CODE			
				R40		R42	
STRAIGHT HOLES	EXISTING COUNTERSUNK HOLES [K]	RESTRICTED ACCESS HOLES	EXPENDABLE TOOLING SET	CRTS-R40-1-246 [P]	CWRK-R40-1 [R]	CRTS-R42-1-277 [P]	CWRK-R42-1 [R]
•		•	STARTING DRILL [H]	CRSD-R40-1	WCI-SD-R40-1	CRSD-R42-1	WCI-SD-R42-1
•	•	•	STARTING REAMER	CRSR-R40-1-229	WCI-SR-R40-1-299	CRSR-R42-1-260	WCI-SR-R42-1-260
•	•	•	COMBINATION GAGE		WCI-CBG-R40-1		WCI-CBG-R42-1
•	•	•	STARTING HOLE GAGE	CRSG-R40-1		CRSG-R42-1	
•	•	•	MANDREL GAGE	CRMG-R40-1	WCI-WG-R40-1	CRMG-R42-1	WCI-WG-R42-1
•	•		COUNTERSINK MANDREL	KRM-R40-1		KRM-R42-1	
•	•		EXTENSION MANDREL		WCI-ORM-R40-1-30		WCI-ORM-R42-1-30
		•	OFFSET MANDREL	CRM-R40-1	WCI-ADM-R40-1-20	CRM-R42-1	WCI-ADM-R42-1-20
	•		STRAIGHT SPLIT SLEEVE	CRS-R40-24S		CRS-R42-24S	
•		•	FLARED SPLIT SLEEVE	CRS-R40-16F	CBS-R40-16F	CRS-R42-16F	CBS-R42-16F
•	•	•	VERIFICATION GAGE	CRVG-R40-1		CRVG-R42-1	
•	•	•	FINAL REAMER	CRR-R40-1-246	WCI-FR-R40-1-246	CRR-R42-277	WCI-FR-R42-1-277
•	•	•	FINAL GAGE	CRFG-R40-1-246	WCI-FHG-R40-1-246	CRFG-R42-1-277	WCI-FHG-R42-1-277
•			EXTENSION NOSECAP	CRCE-R40-1	WCI-1700NE-R40-20F	CRCE-R42-1	WCI-1700NE-R42-20F
		•	OFFSET NOSECAP	CRC-R40-1	WCI-1700-OA-7-R40	CRC-R42-1	WCI-1700-OA-7-R42
	•		COUNTERSINK NOSECAP	KRC-R40-1		KRC-R42-1	
	• [J]		BACKUP BLOCK	KRBB-R40-1		KRBB-R42-1	
•	•	•	PULLER UNIT	LB-20	WCI-1700-20	LBOA-20	WCI-1700-20
•	•	•	POWERPAK	(IW100MF OR IW10MF) [P] OR 4MITBAC5973 [Q]	WCI-20	(IW100MF OR IW10MF) [P] OR 4MITBAC5973 [Q]	WCI-20
		•	OFFSET ADAPTER	LBOA-20 [N]	WCI-1700-OA-20	LB-20 [N]	WCI-1700-OA-20

COLD WORKING TOOLS FOR HOLES LESS THAN 7/16 INCH DIAMETER - HIGH INTERFERENCE SLEEVE TYPE
TABLE III (CONT)

Alternate High Interference Sleeve Cold Working Process
Figure 2 (Sheet 4)

TYPES OF HOLES			KIT CXORK-2A/B [I] [L] [P] KIT CWORK-2B [R]	TOOL CODE			
				R50		R52	
STRAIGHT HOLES	EXISTING COUNTERSUNK HOLES [K]	RESTRICTED ACCESS HOLES	EXPENDABLE TOOLING SET	CRTS-R50-1-308 [P]	CWRK-R50-1 [R]	CRTS-R52-1-340 [P]	CWRK-R52-1 [R]
•		•	STARTING DRILL [H]	CRSD-R50-1	WCI-SD-R50-1	CRSD-R52-1	WCI-SD-R52-1
•	•	•	STARTING REAMER	CRSR-R50-1-290	WCI-SR-R50-1-290	CRSR-R52-1-322	WCI-SR-R52-1-322
•	•	•	COMBINATION GAGE		WCI-CBG-R50-1		WCI-CBG-R52-1
•	•	•	STARTING HOLE GAGE	CRSG-R50-1		CRSG-R52-1	
•	•	•	MANDREL GAGE	CRMG-R50-1	WCI-WG-R50-1	CRMG-R52-1	WCI-WG-R52-1
•	•		COUNTERSINK MANDREL	KRM-R50-1		KRM-R52-1	
•	•		EXTENSION MANDREL		WCI-ORM-R50-1-30		WCI-ORM-R52-1-30
		•	OFFSET MANDREL	CRM-R50-1	WCI-ADM-R50-1-20	CRM-R52-1	WCI-ADM-R52-1-20
	•		STRAIGHT SPLIT SLEEVE	CRS-R50-24S		CRS-R52-24S	
•		•	FLARED SPLIT SLEEVE	CRS-R50-16F	CBS-R50-16F	CRS-R52-16F	CBS-R52-16F
•	•	•	VERIFICATION GAGE	CRVG-R50-1		CRVG-R52-1	
•	•	•	FINAL REAMER	CRR-R50-1-308	WCI-FR-R50-1-308	CRR-R52-1-340	WCI-FR-R52-1-340
•	•	•	FINAL GAGE	CRFG-R50-1-308	WCI-FHG-R50-1-308	CRFG-R52-1-340	WCI-FHG-R52-1-340
•			EXTENSION NOSECAP	CRCE-R50-1	WCI-1700NE-R50-20F	CRCE-R52-1	WCI-1700NE-R52-20F
		•	OFFSET NOSECAP	CRC-R50-1	WCI-1700-OA-7-R50	CRC-R52-1	WCI-1700-OA-7-R52
	•		COUNTERSINK NOSECAP	KRC-R50-1		KRC-R52-1	
	• [J]		BACKUP BLOCK	KRBB-R50-1		KRBB-R52-1	
•	•	•	PULLER UNIT	LB-20	WCI-1700-20	LBOA-20 [N]	WCI-1700-20
•	•	•	POWERPAK	(IW100MF OR IW10MF) [P] OR 4MITBAC5973 [Q]	WCI-20	(IW100MF OR IW10MF) [P] OR 4MITBAC5973 [Q]	WCI-20
		•	OFFSET ADAPTER	LB-20 [N]	WCI-1700-OA-20	LBOA-20 [N]	WCI-1700-OA-20

COLD EXPANSION TOOLS FOR HOLES LESS THAN 7/16 INCH DIAMETER - HIGH INTERFERENCE SLEEVE TYPE
TABLE III (CONT)

Alternate High Interference Sleeve Cold Working Process
Figure 2 (Sheet 5)

TYPES OF HOLES			KIT CXORK-2A/B [I] [L] [P] KIT CWORK-2B [R]	TOOL CODE			
				R60		R62	
STRAIGHT HOLES	EXISTING COUNTERSUNK HOLES [K]	RESTRICTED ACCESS HOLES	EXPENDABLE TOOLING SET	CRTS-R60-1-371 [P]	CWRK-R60-1 [R]	CRTS-R62-1-402 [P]	CWRK-R62-1 [R]
•		•	STARTING DRILL [H]	CRSD-R60-1	WCI-SD-R60-1	CRSD-R62-1	WCI-SD-R62-1
•	•	•	STARTING REAMER	CRSR-R60-1-352	WCI-SR-R60-1-352	CRSR-R62-1-383	WCI-SR-R62-1-383
•	•	•	COMBINATION GAGE		WCI-CBG-R60-1		WCI-CBG-R62-1
•	•	•	STARTING HOLE GAGE	CRSG-R60-1		CRSG-R62-1	
•	•	•	MANDREL GAGE	CRMG-R60-1	WCI-WG-R60-1	CRMG-R62-1	WCI-WG-R62-1
•	•		COUNTERSINK MANDREL	KRM-R60-1		KRM-R62-1	
•	•		EXTENSION MANDREL		WCI-ORM-R60-1-30		WCI-ORM-R62-1-30
		•	OFFSET MANDREL	CRM-R60-1	WCI-ADM-R60-1-20	CRM-R62-1	WCI-ADM-R62-1-20
	•		STRAIGHT SPLIT SLEEVE	CRS-R60-24S		CRS-R62-24S	
•		•	FLARED SPLIT SLEEVE	CRS-R60-16F	CBS-R60-16F	CRS-R62-16F	CBS-R62-16F
•	•	•	VERIFICATION GAGE	CRVG-R60-1		CRVG-R62-1	
•	•	•	FINAL REAMER	CRR-R60-1-371	WCI-FR-R60-1-371	CRR-R62-1-402	WCI-FR-R62-1-402
•	•	•	FINAL GAGE	CRFG-R60-1-371	WCI-FHG-R60-1-371	CRFG-R62-1-402	WCI-FHG-R62-1-402
•			EXTENSION NOSECAP	CRCE-R60-1	WCI-1700NE-R60-20F	CRCE-R62-1	WCI-1700NE-R62-20F
		•	OFFSET NOSECAP	CRC-R60-1	WCI-1700-0A-7-R60	CRC-R62-1	WCI-1700-0A-7-R62
	•		COUNTERSINK NOSECAP	KRC-R60-1		KRC-R62-1	
	• [J]		BACKUP BLOCK	KRBB-R60-1		KRBB-R62-1	
•	•	•	PULLER UNIT	LBOA-20	WCI-1700-20	LB-20	WCI-1700-20
•	•	•	POWERPAK	(IW100MF OR IW10MF) [P] OR 4MITBAC5973 [Q]	WCI-20	(IW100MF OR IW10MF) [P] OR 4MITBAC5973 [Q]	WCI-20
		•	OFFSET ADAPTER	LB-20 [N]	WCI-1700-0A-20	LBOA-20 [N]	WCI-1700-0A-20

COLD EXPANSION TOOLS FOR HOLES LESS THAN 7/16 INCH DIAMETER - HIGH INTERFERENCE SLEEVE TYPE
TABLE III (CONT)

Alternate High Interference Sleeve Cold Working Process
Figure 2 (Sheet 6)

KIT CXORK-3 [P] [M] KIT CWORK-3 [R]	TOOL CODE							
	14-0-N		16-0-N		18-0-N		20-0-N	
EXPENDABLE TOOLING SET	CBTS-14-0-N-1 [P]	CBMK-14-0-N [R]	CBTS-16-0-N-1 [P]	CBMK-16-0-N [R]	CBTS-18-0-N-1 [P]	CBMK-18-0-N [R]	CBTS-20-0-N-1 [P]	CBMK-20-0-N [R]
STARTING DRILL	CBSD-14-0-N-1	WCI-SD-14-0-N	CBSD-16-0-N-1	WCI-SD-16-0-N	CBSD-18-0-N-1	WCI-SD-18-0-N	CBSD-20-0-N-1	WCI-SD-20-0-N
STARTING REAMER	CBSR-14-0-N-1	WCI-SR-14-0-N	CBSR-16-0-N-1	WCI-SR-16-0-N	CBSR-18-0-N-1	WCI-SR-18-0-N	CBSR-20-0-N-1	WCI-SR-20-0-N
COMBINATION GAGE	CBG-14-0-N-1	WCI-CBG-14-0-N	CBG-16-0-N-1	WCI-CBG-16-0-N	CBG-18-0-N-1	WCI-CBG-18-0-N	CBG-20-0-N-1	WCI-CBG-20-0-N
STARTING HOLE GAGE	CBSG-14-0-N-1		CBSG-16-0-N-1		CBSG-18-0-N-1		CBSG-20-0-N-1	
MANDREL GAGE	CBMG-14-0-N-1	WCIS-WG-14-0-N	CBMG-16-0-N-1	WCIS-WG-16-0-N	CBMG-18-0-N-1	WCIS-WG-18-0-N	CBMG-20-0-N-1	WCIS-WG-20-0-N
MANDREL	CBM-14-0-N-2-30-V1	WCIS-5300-14-0-N-2-30	CBM-16-0-N-2-30-V1	WCIS-5300-16-0-N-2-30	CBM-18-0-N-2-30-V1	WCIS-5300-18-0-N-2-30	CBM-20-0-N-2-30-V1	WCIS-5300-20-0-N-2-30
STRAIGHT SPLIT SLEEVE	CBS-14-0-N-16S	CBS-14-0-N-16S	CBS-16-0-N-16S	CBS-16-0-N-16S	CBS-18-0-N-16S	CBS-18-0-N-16S	CBS-20-0-N-16S	CBS-20-0-N-16S
VERIFICATION GAGE	CBVG-14-0-N-1		CBVG-16-0-N-1		CBVG-18-0-N-1		CBVG-20-0-N-1	
FLUSH NOSECAP	CBC-22-14S	WCI-1800N-14S	CBC-23-16S	WCI-1800N-16S	CBC-23-18S	WCI-1800N-18S	CBC-23-20S	WCI-1800N-20S
PULLER UNIT	MB-30	WCI-1800-30	MB-30	WCI-1800-30	MB-30	WCI-1800-30	MB-30	WCI-1800-30
POWERPAK	(IW100MF OR IW10MF) [P] OR 4MITBAC5973 [Q]	WCI-20	(IW100MF OR IW10MF) [P] OR 4MITBAC5973 [Q]	WCI-20	(IW100MF OR IW10MF) [P] OR 4MITBAC5973 [Q]	WCI-20	(IW100MF OR IW10MF) [P] OR 4MITBAC5973 [Q]	WCI-20

NOTES

- FINAL SIZING REAMER WILL BE CHOSEN BASED ON FINAL HOLE DIAMETER SPECIFIED ON ENGINEERING DRAWING

COLD WORKING TOOLS FOR HOLES GREATER THAN 13/32 AND LESS THAN 1 INCH DIAMETER - HIGH INTERFERENCE SLEEVE TYPE
TABLE IV

Alternate High Interference Sleeve Cold Working Process
Figure 2 (Sheet 7)

KIT CXORK-3 [P] [M] KIT CWORK-3 [R]	TOOL CODE					
	24-0-N		28-0-N		30-0-N	
EXPENDABLE TOOLING SET	CBTS-24-0-N-1 [P]	CBMK-24-0-N [R]	CBTS-28-0-N-1 [P]	CBMK-28-0-N [R]	CBTS-30-0-N-1 [P]	CBMK-30-0-N [R]
STARTING DRILL	CBSD-24-0-N-1	WCI-SD-24-0-N	CBSD-28-0-N-1	WCI-SD-28-0-N	CBSD-30-0-N-1	WCI-SD-30-0-N
STARTING REAMER	CBSR-24-0-N-1	WCI-SR-24-0-N	CBSR-28-0-N-1	WCI-SR-28-0-N	CBSR-30-0-N-1	WCI-SR-30-0-N
COMBINATION GAGE	CBG-24-0-N-1	WCI-CBG-24-0-N	CBG-28-0-N-1	WCI-CBG-28-0-N	CBG-30-0-N-1	WCI-CBG-30-0-N
STARTING HOLE GAGE	CBSG-24-0-N-1		CBSG-28-0-N-1		CBSG-30-0-N-1	
MANDREL GAGE	CBMG-24-0-N-1	WCIS-WG-24-0-N	CBMG-28-0-N-1	WCIS-WG-28-0-N	CBMG-30-0-N-1	WCIS-WG-30-0-N
MANDREL	CBM-24-0-N-2-30-V1	WCIS-5300-24-0-N-2-30	CBM-28-0-N-5-30-V1	WCIS-5300-28-0-N-5-30	CBM-30-0-N-5-30-V1	WCIS-5300-30-0-N-5-30
STRAIGHT SPLIT SLEEVE	CBS-24-0-N-1-16S	CBS-24-0-N-16S	CBS-28-0-N-1-16S	CBS-28-0-N-16S	CBS-30-0-N-1-16S	CBS-30-0-N-16S
VERIFICATION GAGE	CBVG-24-0-N-1		CBVG-25-0-N-1		CBVG-25-0-N-1	
FLUSH NOSECAP	CBC-24-24S	WCI-1800N-24S	CBC-25-28S	WCI-1800N-28S	CBC-25-30S	WCI-1800N-30S
PULLER UNIT	MB-30	WCI-1800-30	MB-20	WCI-1800-30	MB-30	WCI-1800-30
POWERPAK	(IW100MF OR IW10MF) [P] OR 4MITBAC5973 [Q]	WCI-20	(IW100MF OR IW10MF) [P] OR 4MITBAC5973 [Q]	WCI-20	(IW100MF OR IW10MF) [P] OR 4MITBAC5973 [Q]	WCI-20

NOTES

- FINAL SIZING REAMER WILL BE CHOSEN BASED ON FINAL HOLE DIAMETER SPECIFIED ON ENGINEERING DRAWING

COLD WORKING TOOLS FOR HOLES GREATER THAN 13/32 AND LESS THAN 1 INCH DIAMETER - HIGH INTERFERENCE SLEEVE TYPE
TABLE IV (CONT)

Alternate High Interference Sleeve Cold Working Process
Figure 2 (Sheet 8)

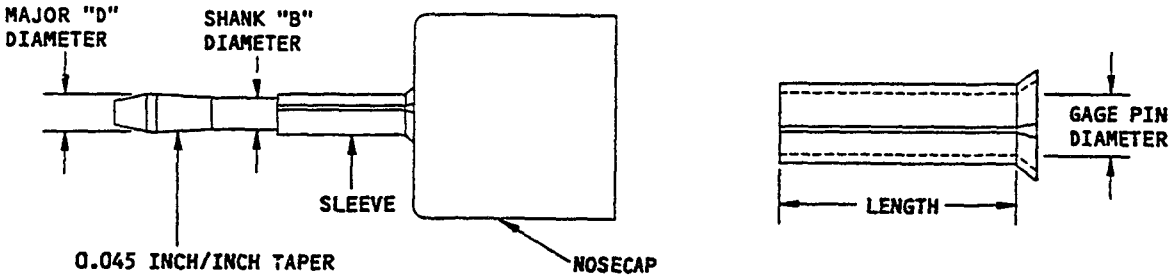

COLD WORKING MANDREL AND SLEEVE DIMENSIONS

TOOL CODE	MANDREL MAJOR DIAMETER "D" G O	GAGE PIN "B" DIAMETER
14-0-N	0.4180	0.3950
16-0-N	0.4695	0.4445
18-0-N	0.5340	0.5070
20-0-N	0.5915	0.5610
24-0-N	0.7165	0.6820
28-0-N	0.8370	0.7980
30-0-N	0.8990	0.8580
30-2-N	0.9310	0.8920
32-0-N	0.9655	0.9200
32-2-N	0.9975	0.9560
32-3-N	1.0135	0.9720
36-0-N	1.0800	1.0350
36-2-N	1.1120	1.0660
38-0-N	1.1425	1.0910
38-2-N	1.1745	1.1275
40-0-N	1.2080	1.1570
40-2-N	1.2400	1.1905
40-3-N	1.2560	1.2065
44-0-N	1.3285	1.2700
44-2-N	1.3605	1.3115
44-3-N	1.3765	1.3275
48-0-N	1.4430	1.3820
48-2-N	1.4750	1.4185
48-3-N	1.4910	1.4345
52-0-N	1.5745	1.5185
52-2-N	1.6055	1.5505

CLASS I SLEEVE COLD WORK REQUIREMENTS
TABLE V

Alternate High Interference Sleeve Cold Working Process
Figure 2 (Sheet 9)

MANDREL "D" DIAMETER RANGE	MANDREL "D" DIAMETER TOLERANCE
0.1400 THRU 0.2789	+0.0002 -0.0006
0.2940 THRU 0.5813	+0.0002 -0.0010
0.5915 AND ON	+0.0002 -0.0017

MANDREL TOLERANCE FOR MAJOR "D" DIAMETER TO ACCOMMODATE NORMAL WEAR
TABLE VI

Alternate High Interference Sleeve Cold Working Process
Figure 2 (Sheet 10)

NOTES

[A] -0.000/+ 0.005 INCH

[B] +/- 0.002 INCH

[C] HI-LOK, LOCKBOLT OR HEX-DRIVE BOLT.

[D] EXPANDED HOLE MAY BE ENLARGED TO MAXIMUM ALLOWABLE WITHOUT RE-COLD WORKING OF THE HOLE.

[E] +/- 0.003 INCH

[F] SELECTED TOOL CODE MAY BE USED FOR ANY EXISTING HOLE DIAMETER WHICH IS LESS THAN THE SPECIFIED MAXIMUM.

[G] MAJOR DIAMETER "D" TOLERANCES FOR NEW AND/OR USED MANDRELS ARE +/- 0.0002 INCH FOR DIAMETERS UP TO 1.000 INCH AND +/- 0.0005 INCH FOR DIAMETERS 1.000 INCH AND LARGER. MAJOR DIAMETER TOLERANCE FOR USED MANDRELS SHALL BE AS SHOWN IN TABLE VIII. MINOR "B" TOLERANCE SHALL BE +/- 0.0005 INCH.

[H] STARTING DRILL REQUIRED FOR NEW HOLES ONLY.

[I] THE CXORK TOOLING KIT DOES NOT INCLUDE THE COUNTERSINK NOSE CAP AND RELATED TOOLING.

[J] BACKUP BLOCK REQUIRED ONLY IF STRAIGHT PORTION OF A COUNTERSUNK HOLE IS LESS THAN ONE HOLE DIAMETER IN DEPTH.

[K] ENGINEERING APPROVAL REQUIRED BEFORE USING A COUNTERSINK NOSECAP. STRAIGHT HOLE TOOLING OR RESTRICTED ACCESS TOOLING COULD BE USED IN PLACE IF PROPER SEATING OF NOSECAP ON STRUCTURE IS ATTAINABLE.

[L] INCLUDES ALL TOOLING LISTED IN TABLE IV EXCEPT FOR THE PULLER UNIT, OFFSET ADAPTER AND HYDRAULIC POWERPAK.

[M] INCLUDES ALL TOOLING LISTED IN TABLE V EXCEPT FOR THE PULLER UNIT AND POWERPAK.

[N] MAY BE USED ONLY WITH LB-20 PULLER.

[O] FOR FASTENERS LESS THAN 7/16 INCH DIAMETER, USE MANDREL GAGES LISTED IN TABLE IV TO CHECK FOR WEAR ON MAJOR MANDREL DIAMETER.

[P] FATIGUE TECHNOLOGY INC.
150 ANDOVER PARK WEST
P.O. BOX C-88388
SEATTLE, WA 98188.

[Q] HYDRAULIC AND AIR EQUIPMENT CO.
4401 AIRPORT WAY SO.
SEATTLE, WA 98108.

[R] WEST COAST INDUSTRIES
14900 WHITMAN AVE. NO.
SEATTLE, WA 98133.

Alternate High Interference Sleeve Cold Working Process
Figure 2 (Sheet 11)

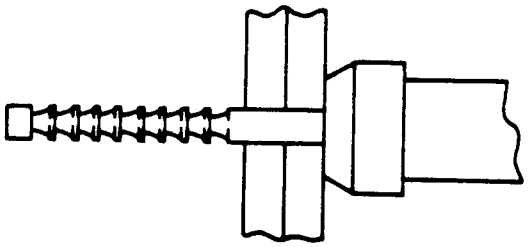

STEP 1 BROACH OR REAM HOLE TO STARTING SIZE SHOWN IN TABLE 1

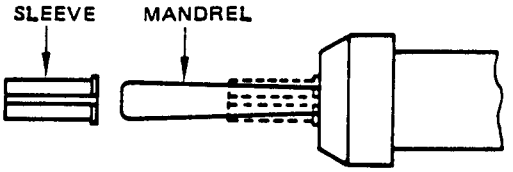

STEP 2 SLIDE SLEEVE OVER MANDREL UP TO NOSE PIECE OF PULLER

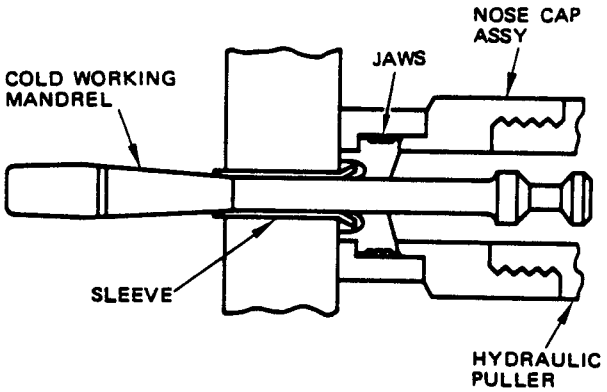

TYPICAL ASSEMBLY
(PRIOR TO COLD WORKING)

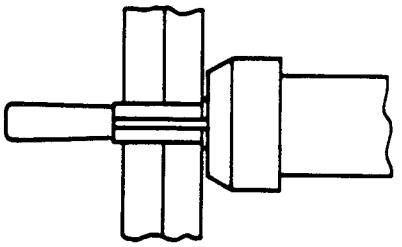

STEP 3 INSERT MANDREL AND SLEEVE ASSY INTO HOLE

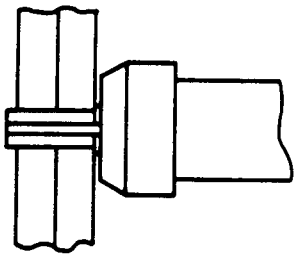

STEP 4 ACTUATE PULLER TO PULL MANDREL THROUGH HOLE

STEP 5 REMOVE AND DISCARD SLEEVE

SIMPLIFIED SEQUENCE OF OPERATIONS

(REFER TO TEXT FOR COMPREHENSIVE SEQUENCE OF OPERATIONS)

Low Interference Sleeve Cold Working Process
Figure 3 (Sheet 1)

NOMINAL HOLE SIZE [B]		BOLTS AND OPEN HOLES			LOCKBOLTS AND HI-LOKS			RIVETS		
STAN-DARD	OVER-SIZE	STARTING HOLE DIA. +0.0005 -0.0025	FINISHED HOLE DIAMETER MIN	FINISHED HOLE DIAMETER MAX	STARTING HOLE DIA. +0.0005 -0.0025	FINISHED HOLE DIAMETER MIN	FINISHED HOLE DIAMETER MAX	STARTING HOLE DIA. +0.0005 -0.0025	FINISHED HOLE DIAMETER MIN	FINISHED HOLE DIAMETER MAX
1/8		0.1250	0.1267	0.1295				0.1270	0.128	0.131
	5/32	0.1562	0.1580	0.1608				0.1580	0.159	0.162
3/16		0.1875	0.1894	0.1922	0.1855	0.187	0.190	0.1890	0.190	0.195
	7/32	0.2187	0.2206	0.2234	0.2130	0.216	0.219	0.2185	0.220	0.2245
1/4		0.2500	0.2520	0.2548	0.2455	0.247	0.250	0.2520	0.253	0.257
	9/32	0.2812	0.2833	0.2861	0.2750	0.278	0.281	0.2810	0.283	0.286
5/16		0.3125	0.3145	0.3175	0.3080	0.309	0.313	0.3140	0.317	0.3205
	11/32	0.3437	0.3458	0.3488	0.3380	0.341	0.344	0.3435	0.345	0.348
3/8		0.3750	0.3771	0.3803	0.3695	0.371	0.375	0.3750	0.378	0.382
	13/32	0.4062	0.4083	0.4117	0.4015	0.403	0.406	0.4060	0.408	0.412
7/16		0.4375	0.4396	0.4432	0.4310	0.434	0.438	0.4365	0.441	0.444
	15/32	0.4687	0.4708	0.4746	0.4625	0.466	0.469			
1/2		0.500	0.5020	0.5064						
	17/32	0.5312	0.5332	0.5376						
9/16		0.5625	0.5647	0.5691						
	19/32	0.5937	0.5959	0.6003						
5/8		0.6250	0.6272	0.6316						
	21/32	0.6562	0.6585	0.6629						
11/16		0.6875	0.6899	0.6943						
	23/32	0.7187	0.7212	0.7256						
3/4		0.7500	0.7525	0.7571						
	25/32	0.7812	0.7837	0.7883						
13/16		0.8125	0.8151	0.8197						
	27/32	0.8437	0.8464	0.8510						
7/8		0.8750	0.8778	0.8824						
	29/32	0.9062	0.9091	0.9137						
15/16		0.9375	0.9404	0.9452						
	31/32	0.9687	0.9716	0.9764						
1		1.0000	1.0030	1.0078						
	1-1/32	1.0312	1.0343	1.0931						

HOLE SIZES FOR LOW INTERFERENCE SLEEVE COLD WORKING PROCESS
TABLE I

Low Interference Sleeve Cold Working Process
Figure 3 (Sheet 2)

274596

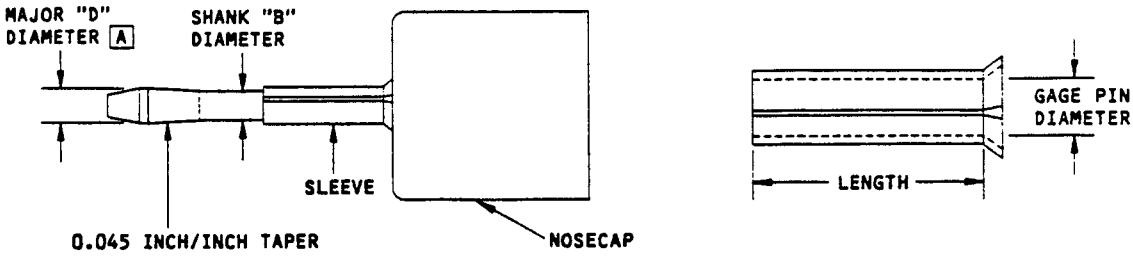

COLD WORKING MANDREL AND SLEEVE DIMENSIONS

NOMINAL HOLE SIZE		BOLTS AND OPEN HOLES		LOCKBOLTS AND HI-LOKS		RIVETS	
STAN-DARD	OVER-SIZE	MAJOR "D" DIA. ±0.0002	GAGE PIN "B" DIA.	MAJOR "D" DIA. ±0.0002	GAGE PIN "B" DIA.	MAJOR "D" DIA.	GAGE PIN "B" DIA. ±0.0005
1/8		0.1200 0.1513	0.1065 0.1377			0.1200 0.1513	0.1085 0.1395
	5/32						
3/16		0.1827 0.2138	0.1690 0.2002	0.1805 0.2080	0.1670 0.1945	0.1847 0.2138	0.1705 0.2000
	7/32						
1/4		0.2410 0.2728	0.2275 0.2587	0.2365 0.2660	0.2230 0.2525	0.2430 0.2728	0.2295 0.2585
	9/32						
5/16		0.3032 0.3321	0.2900 0.3172	0.3000 0.3280	0.2855 0.3115	0.3067 0.3321	0.2915 0.3170
	11/32						
3/8		0.3636 0.3950	0.3485 0.3797	0.3580 0.3905	0.3430 0.3750	0.3656 0.3950	0.3485 0.3795
	13/32						
7/16		0.4265 0.4579	0.4110 0.4422	0.4215 0.4540	0.4045 0.4360	0.4265	0.4100
	15/32						
1/2		0.4854 0.5168	0.4695 0.5007				
	17/32						
9/16		0.5479 0.5797	0.5320 0.5632				
	19/32						
5/8		0.6112 0.6426	0.5945 0.6257				
	21/32						
11/16		0.6742 0.7056	0.6570 0.6882				
	23/32						
3/4		0.7323 0.7635	0.7135 0.7447				
	25/32						
13/16		0.7950 0.8274	0.7760 0.8072				
	27/32						
7/8		0.8579 0.8893	0.8385 0.8697				
	29/32						
15/16		0.9208 0.9522	0.9010 0.9382				
	31/32						
1		0.9838 1.0152	0.9635 0.9947				
	1-1/32						

LOW INTERFERENCE SLEEVE COLD WORK REQUIREMENTS
TABLE II

Low Interference Sleeve Cold Working Process
Figure 3 (Sheet 3)

275823

NOMINAL HOLE SIZE	MANDREL ST5300-CWM [C]	SLEEVE ST5300-CWS [D]	UNIVERSAL KIT NO. MITBAC5973 [F]				UNIVERSAL KIT NO. 2MITBAC5973 [F]			
			NOSE CAP ST5300 -CBC	JAW ASSY ST5300 -CBC [E]	CHUCK ASSY		NOSE CAP ST1350A -C	JAW ASSY ST5300 -CBC [E]	CHUCK ASSY	
					3-JAW ST1350A	THREADED ST1350A			3-JAW ST5300 -C	THREADED ST1350A -C
1/8	-B1267-"A"-"B"	-B1267-"C"-"D"	-3	"E"-23	-29	-38	-12	"E"-23	-227	-35
5/32	-B1580-"A"-"B"	-B1580-"C"-"D"								
3/16	-B1894-"A"-"B"	-B1894-"C"-"D"		"E"-24				"E"-24		
7/32	-B2206-"A"-"B"	-B2206-"C"-"D"								
1/4	-B2520-"A"-"B"	-B2520-"C"-"D"		"E"-25				"E"-25		
9/32	-B2833-"A"-"B"	-B2833-"C"-"D"		"E"-26				"E"-26		
5/16	-B3145-"A"-"B"	-B3145-"C"-"D"								
11/32	-B3458-"A"-"B"	-B3458-"C"-"D"		"E"-27				"E"-27		
3/8	-B3771-"A"-"B"	-B3771-"C"-"D"								
13/32	-B4083-"A"-"B"	-B4083-"C"-"D"		"E"-28				"E"-28		
7/16	-B4396-"A"-"B"	-B4396-"C"-"D"								
15/32	-B4708-"A"-"B"	-B4708-"C"-"D"		"E"-29				"E"-29		
1/2	-B5020-"A"-"B"	-B5020-"C"-"D"								
17/32	-B5332-"A"-"B"	-B5332-"C"-"D"		"E"-30				"E"-30		
9/16	-B5647-"A"-"B"	-B5647-"C"-"D"		"E"-31				"E"-31		
19/32	-B5959-"A"-"B"	-B5959-"C"-"D"								
5/8	-B6272-"A"-"B"	-B6272-"C"-"D"								
21/32	-B6585-"A"-"B"	-B6585-"C"-"D"		"E"-32				"E"-32		
11/16	-B6899-"A"-"B"	-B6899-"C"-"D"		"E"-33				"E"-33		
23/32	-B7212-"A"-"B"	-B7212-"C"-"D"								
3/4	-B7525-"A"-"B"	-B7525-"C"-"D"								
25/32	-B7837-"A"-"B"	-B7837-"C"-"D"		"E"-34				"E"-34		
13/16	-B8151-"A"-"B"	-B8151-"C"-"D"		"E"-35				"E"-35		
27/32	-B8464-"A"-"B"	-B8464-"C"-"D"								
7/8	-B8778-"A"-"B"	-B8778-"C"-"D"		"E"-36				"E"-36		
29/32	-B9091-"A"-"B"	-B9091-"C"-"D"								
15/16	-B9404-"A"-"B"	-B9404-"C"-"D"								
31/32	-B9716-"A"-"B"	-B9716-"C"-"D"								
1	-B10030-"A"-"B"	-B10030-"C"-"D"	-303							
1-1/32	-B10343-"A"-"B"	-B10343-"C"-"D"								

BOLTS AND OPEN HOLES - LOW INTERFERENCE SLEEVE TYPE COLD WORKING PROCESS
TABLE III

Low Interference Sleeve Cold Working Process
Figure 3 (Sheet 4)

275399

NOMINAL HOLE SIZE	MANDREL ST5300-CWM [C]	SLEEVE ST5300-CWS [D]	UNIVERSAL KIT NO. MITBAC5973 [F]				UNIVERSAL KIT NO. 2MITBAC5973 [F]			
			NOSE CAP ST5300 -CBC	JAW ASSY ST5300 -CBC [E]	CHUCK ASSY		NOSE CAP ST1350A -C	JAW ASSY ST5300 -CBC [E]	CHUCK ASSY	
					3-JAW ST1350A	THREADED ST1350A			3-JAW ST5300 -C	THREADED ST1350A -C
3/16	-H1870-"A"-"B"	-H1870-"C"-"D"	-3	"E"-24	-29	-38	-12	"E"-24	-227	-35
7/32	-H2160-"A"-"B"	-H2160-"C"-"D"		"E"-25				"E"-25		
1/4	-H2470-"A"-"B"	-H2470-"C"-"D"								
9/32	-H2780-"A"-"B"	-H2780-"C"-"D"		"E"-26				"E"-26		
5/16	-H3090-"A"-"B"	-H3090-"C"-"D"								
11/32	-H3410-"A"-"B"	-H3410-"C"-"D"		"E"-27				"E"-27		
3/8	-H3710-"A"-"B"	-H3710-"C"-"D"								
13/32	-H4030-"A"-"B"	-H4030-"C"-"D"		"E"-28				"E"-28		
7/16	-H4340-"A"-"B"	-H4340-"C"-"D"								
15/32	-H4660-"A"-"B"	-H4660-"C"-"D"		"E"-29				"E"-29		

HEX-DRIVE BOLTS AND LOCKBOLTS - LOW INTERFERENCE SLEEVE TYPE COLD WORKING TOOLS
TABLE IV

Low Interference Sleeve Cold Working Process
Figure 3 (Sheet 5)

275402

NOMINAL HOLE SIZE	MANDREL ST5300-CWM [C]	SLEEVE ST5300-CWS [D]	UNIVERSAL KIT NO. MITBAC5973 [F]				UNIVERSAL KIT NO. 2MITBAC5973 [F]			
			NOSE CAP ST5300 -CBC	JAW ASSY ST5300 -CBC [E]	CHUCK ASSY		NOSE CAP ST1350A -C	JAW ASSY ST5300 -CBC [E]	CHUCK ASSY	
					3-JAW ST1350A	THREADED ST1350A			3-JAW ST5300 -C	THREADED ST1350A -C
1/8	-R1280-"A"-"B"	-R1280-"C"-"D"	-3	"E"-23	-29	-38	-12	"E"-23	-227	-35
5/32	-R1590-"A"-"B"	-R1590-"C"-"D"								
3/16	-R1900-"A"-"B"	-R1900-"C"-"D"		"E"-24				"E"-24		
7/32	-R2200-"A"-"B"	-R2200-"C"-"D"								
1/4	-R2530-"A"-"B"	-R2530-"C"-"D"		"E"-25				"E"-25		
9/32	-R2830-"A"-"B"	-R2830-"C"-"D"								
5/16	-R3170-"A"-"B"	-R3170-"C"-"D"		"E"-26				"E"-26		
11/32	-R3450-"A"-"B"	-R3450-"C"-"D"								
3/8	-R3780-"A"-"B"	-R3780-"C"-"D"		"E"-27				"E"-27		
13/32	-R4080-"A"-"B"	-R4080-"C"-"D"								
7/16	-R4410-"A"-"B"	-R4410-"C"-"D"		"E"-28				"E"-28		

RIVETS - LOW INTERFERENCE SLEEVE TYPE COLD WORKING TOOLS
TABLE V

Low Interference Sleeve Cold Working Process
Figure 3 (Sheet 6)

275406

NOTES

[A] MAJOR DIAMETER "D" TOLERANCES FOR NEW AND/OR UNUSED MANDRELS ARE +/- 0.0002 INCH FOR DIAMETERS UP TO 1.000 INCH AND +/- 0.0005 INCH FOR DIAMETERS 1.000 INCH AND LARGER. MAJOR DIAMETER TOLERANCE FOR USED MANDRELS SHALL BE AS SHOWN IN FIGURE 1, TABLE VIII. MINOR "B" TOLERANCE SHALL BE +/- 0.0005 INCH.

[B] FASTENER SIZE IS 1/32 INCH DIAMETER LARGER THAN EXISTING HOLE DIAMETER.

[C] "A" IS MATERIAL STACK UP IN 1/16 OF AN INCH. -24 FOR STACK UP TO 1-1/2 INCHES TO BE USED WITH -1 OR -1A MANDREL AND -48 FOR STACK UP TO 3 INCHES TO BE USED WITH -2 OR -3 MANDREL.

"B" IS THE TYPE OF MANDREL REQUIRED -1 OR -1A MANDREL IS REQUIRED TO SUIT A SMALL 3 JAW OR THREADED (1/2-20) CHUCK, RESPECTIVELY AND -2 OR -3 MANDREL IS REQUIRED TO SUIT A LARGE 3 JAW OR THREADED (7/8-14) CHUCK, RESPECTIVELY. A THREADED CHUCK IS PREFERRED FOR SIZES OVER 0.4045 DIA.

EXAMPLE: ST 5300-CWM-R1280-24 1A.

THIS IS A MANDREL FOR STACKUPS LESS THAN 1-1/2 INCHES (INDICATED BY -24) FOR USE WITH A THREADED CHUCK (INDICATED BY -1A) FOR COLD WORKING A RIVET HOLE WITH A NORMAL SIZE OF 0.1280 DIA.

[D] "C" IS THE LENGTH OF THE SLEEVE IN 1/16 OF AN INCH WHICH MUST EQUAL OR EXCEED THE HOLE DEPTH. SLEEVES ARE MADE IN 1/4 INCH INCREMENTS ONLY, FROM 3/4 INCH TO 1-1/2 INCHES LONG. SLEEVES MAY BE STACKED FOR DEEP HOLES.

"D" IS THE TYPE OF SLEEVE DENOTED BY THE SUFFIX F FOR FLARED TYPE OR S FOR STRAIGHT TYPE. FLARED SLEEVES ARE PREFERRED FOR HOLES UP TO 0.3447 DIA, BUT IF STACKED, THE ADDITIONAL SLEEVES MUST BE THE STRAIGHT TYPE.

EXAMPLE: ST 5300-CWS-R1280-8-F.

THIS IS A FLARED SLEEVE (INDICATED BY -F) FOR A 0.1280 DIA RIVET HOLE WITH A LENGTH OF 1/2 INCH (INDICATED BY -8).

[E] "E" IS THE TYPE OF JAW ASSEMBLY REQUIRED TO SUIT THE TYPE OF SLEEVE BEING USED. USE THE SUFFIX F FOR FLARED TYPE OR S FOR STRAIGHT TYPE.

[F] KITS 2MITBAC5973 AND 3MITBAC5973 ARE ALTERNATIVES FOR KIT MITBAC5973.

KITS MITBAC5973 AND 3MITBAC5973 ARE ALTERNATIVES FOR KIT 2MITBAC5973.

Low Interference Sleeve Cold Working Process
Figure 3 (Sheet 7)

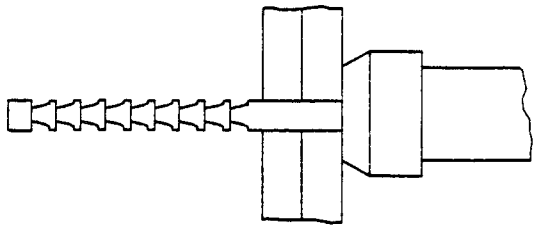

STEP 1 BROACH OR REAM HOLE TO STARTING SIZE SHOWN IN TABLE I

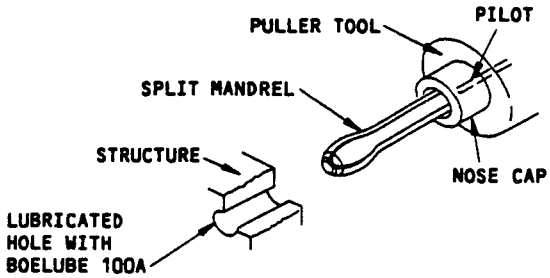

STEP 2 INSTALL PILOT, MANDREL AND NOSECAP ON PULLER GUN

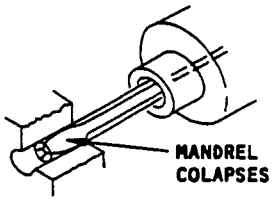

STEP 3 INSERT MANDREL INTO HOLE

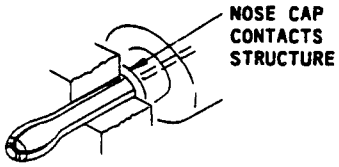

STEP 4 PASS THROUGH HOLE COMPLETE

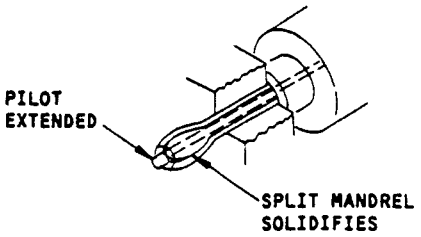

STEP 5 EXTEND PILOT

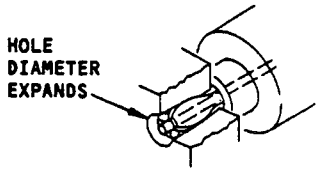

STEP 6 ACTUATE PULLER TO PULL MANDREL THROUGH HOLE

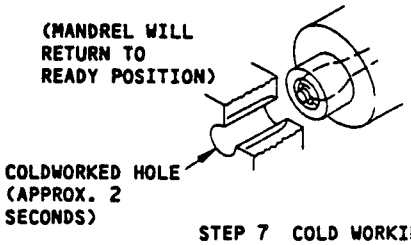

STEP 7 COLD WORKING COMPLETE

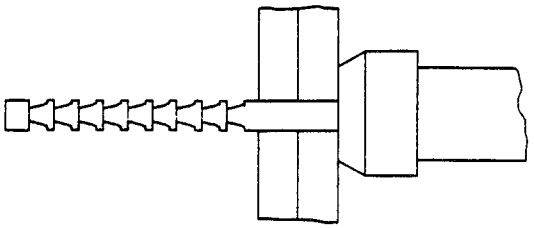

STEP 8 BROACH OR REAM HOLE TO FINAL SIZE SHOWN IN TABLE I

SIMPLIFIED SEQUENCE OF OPERATIONS

High Interference Sleeveless Cold Working Process
Figure 4 (Sheet 1)

275851

NOMINAL HOLE SIZE	STARTING HOLE DIAMETER	HOLE SIZE FINAL REAM	DRILLING SPEED (RPM)	REAMING SPEED (RPM)	COLLAPSIBLE MANDREL	
					MAJOR DIA. A ±0.0004 B	SLOT WIDTH +0.002 -0.000
1/4	0.232-0.234	0.2465-0.2475	6000	3000	0.2465	0.017
5/16	0.293-0.295	0.309-0.310	3000	2000	0.3109	0.019
3/8	0.3575-0.3595	0.3715-0.3725	3000	2000	0.3753	0.021

CLASS I - COLD WORKING REQUIREMENTS
TABLE I

High Interference Sleeveless Cold Working Process
Figure 4 (Sheet 2)

275409

TOOL DESCRIPTION	HOLE SIZE			PROCUREMENT
	1/4	5/16	3/8	
STARTING DRILL [C]	WCI-SD-2188-"E"	WCI-SD-2812-"E"	WCI-SD-3438-"E"	[N]
STARTING REAMER [C]	WCI-SR-2320-216-"E"	WCI-SR-2930-279-"E"	WCI-SR-3575-342-"E"	[N]
STARTING HOLE GAUGE [D] [E]	WCI-5300-SHG-8-"F"-"G"	WCI-5300-SHG-10-"F"-"G"	WCI-5300-SHG-12-"F"-"G"	[N]
MANDREL INSPECTION GAUGE BLOCK (NEW MANDRELS) [E]	ST5300-CMG-8-"H"	ST5300-CMG-10-"H"	ST5300-CMG-12-"H"	[N] [O]
MANDREL WEAR GAUGE BLOCK (OLD MANDRELS)	ST5300-CMGA-8-0	ST5300-CMGA-10-0	ST5300-CMGA-12-0	[N] [O]
PILOT WRENCH [G]	WCI-300-PW-"I"	WCI-300-PW-"I"	WCI-300-PW-"I"	[N]
PILOT [G] [H]	WCI-300P-8-"I"-"J"	WCI-300P-10-"I"-"J"	WCI-300P-12-"I"-"J"	[N]
STRAIGHT SLOT MANDREL [E] [G]	ST5300-CMM-8-"H"-"I"	ST5300-CMM-10-"H"-"I"	ST5300-CMM-12-"H"-"I"	[N] [O]
OFFSET SLOT MANDREL [D] [G] [H]	WCI-5300-CMO-8-"F"-"I"-"J"	WCI-5300-CMO-10-"F"-"I"-"J"	WCI-5300-CMO-12-"F"-"I"-"J"	[N]
HOLE LUBRICATOR	ST5300-CML-8-5	ST5300-CML-10-5	ST5300-CML-12-5	[N] [P] [Q]
BOELUBE PUMP (OPTIONAL)	ST1219C-14			[R] [S] [T] [U]
HYDRAULIC POWER SUPPLY	ENERPAC MODEL PAM 30-1555-SPL-5-1			[O]
PULLER TOOL [G] [I]	WCI-300-"I"			[N]
NOSECAP	WCI-300N-8-	WCI-300N-10-	WCI-300N-12-	[N]
ANGLE HEAD NOSECAP	WCI-300NA-8-	WCI-300NA-10-	WCI-300NA-12-	[N]
FINAL SIZING REAMER [J]	ST5300-CMR-8-0-"K"-2464	ST5300-CMR-10-0-"K"-3088	ST5300-CMR-12-0-"K"-3713	[N]
COMPLETE ASSY WITH STRAIGHT SLOT MANDREL [G] [K]	WCI-300-CMS-8-0-"I"	WCI-300-CMS-10-0-"I"	WCI-300-CMS-12-0-"I"	[N]
COMPLETE ASSY WITH OFFSET SLOT MANDREL [G] [K]	WCI-300-CMO-8-0-"I"	WCI-300-CMO-10-0-"I"	WCI-300-CMO-12-0-"I"	[N]

COLD WORKING TOOLS FOR HIGH INTERFERENCE SLEVELESS PROCESS
TABLE II

High Interference Sleeveless Cold Working Process
Figure 4 (Sheet 3)

275423

CHARACTERISTIC	AQL (PERCENT) IN ACCORDANCE WITH MIL-STD-105 OR EQUIVALENT
STARTING HOLE DIAMETER	1.5
FINISHED HOLE DIAMETER [L]	1.0 [M]
SURFACE DEFECTS FAYING SURFACE SEPARATION	2.5
ALL OTHER ENGINEERING REQUIREMENTS	4.0

ACCEPTABLE QUALITY LEVEL
TABLE III

High Interference Sleeveless Cold Working Process
Figure 4 (Sheet 4)

275422

NOTES

[A] THIS DIMENSION IS MEASURED IN THE SUPPORTED OR EXPANDED POSITION WITH THE MATCHING PILOT AND APPLIES TO NEW MANDRELS.

[B] MINIMUM MAJOR MANDREL DIAMETER, AFTER USE IS 0.2456 (1/4), 0.3100 (5/16) AND 0.3744 (3/8) INCHES.

[C] "E" IS THE OVERALL LENGTH IN INCHES.

[D] "F" DENOTES OVERSIZE IN 1/64 INCH INCREMENTS.

[E] "G" IS THE ALLOY TO BE COLD WORKED. IT'S EQUAL TO 2 FOR 2000 SERIES AND 7 FOR 7000 SERIES.

[F] "H" IS 0 FOR NOMINAL AND 2 FOR 1/32 OVERSIZE.

[G] "I" DENOTES STACKUP IN 1/10 INCH INCREMENTS.

[H] "J" IS OMITTED FOR STANDARD PULLER AND DENOTED BY 'A' FOR ANGLE HEAD PULLER.

[I] ANGLE HEAD PULLER IS AVAILABLE FOR SLEEVELESS COLDWORKING IN LIMITED ACCESS AREAS. ITS PART NUMBER IS WCI-300AH AND THE MAXIMUM STACKUP IS 1.06 INCHES

[J] "K" IS 1 FOR STRAIGHT SHANK AND 2 FOR QUICKCHANGE CHUCK.

[K] COMPLETE ASSEMBLY INCLUDES MANDREL, PULLER TOOL, NOSECAP AND PILOT.

[L] MEASURED ON AT LEAST 2 POSITIONS WITH 90 DEGREE SEPARATION.

[M] QUALITY CONTROL MAY REDUCE SAMPLING TO A 2.5 PERCENT AQL WHEN CONSISTENT CONFORMANCE TO ACCEPTABLE REQUIREMENTS HAS BEEN DEMONSTRATED

[N] WEST COAST INDUSTRIES 1111 NORTH 92ND, SEATTLE, WA, USA 98103

[O] E.F. BAILEY CO., 5610 4TH AVE. SO., SEATTLE WA, USA, 98108

[P] CAMPBELLS INDUSTRIAL SUPPLY, 3433 AIRPORT WAY SO., SEATTLE WA, USA 98134

[Q] AIR-OIL PRODUCTS CORP., 8801 14TH AVE., SO., SEATTLE WA, USA 98108

[R] HYDRAULIC COMPONENTS CO. INC., 14254 S.E. EASTGATE WAY, BELLEVUE WA., USA, 98007

[S] BUCHANAN AIR, INC., 524 W. GOVERNMENT WAY, SEATTLE WA, USA, 98199

[T] GEORGE W. WARDEN CO. INC., 203 N. 36TH ST., SEATTLE WA, USA, 98103

[U] FITTINGS INC., 5979 4TH AVE. SO., SEATTLE WA, USA, 98124

High Interference Sleeveless Cold Working Process
Figure 4 (Sheet 5)

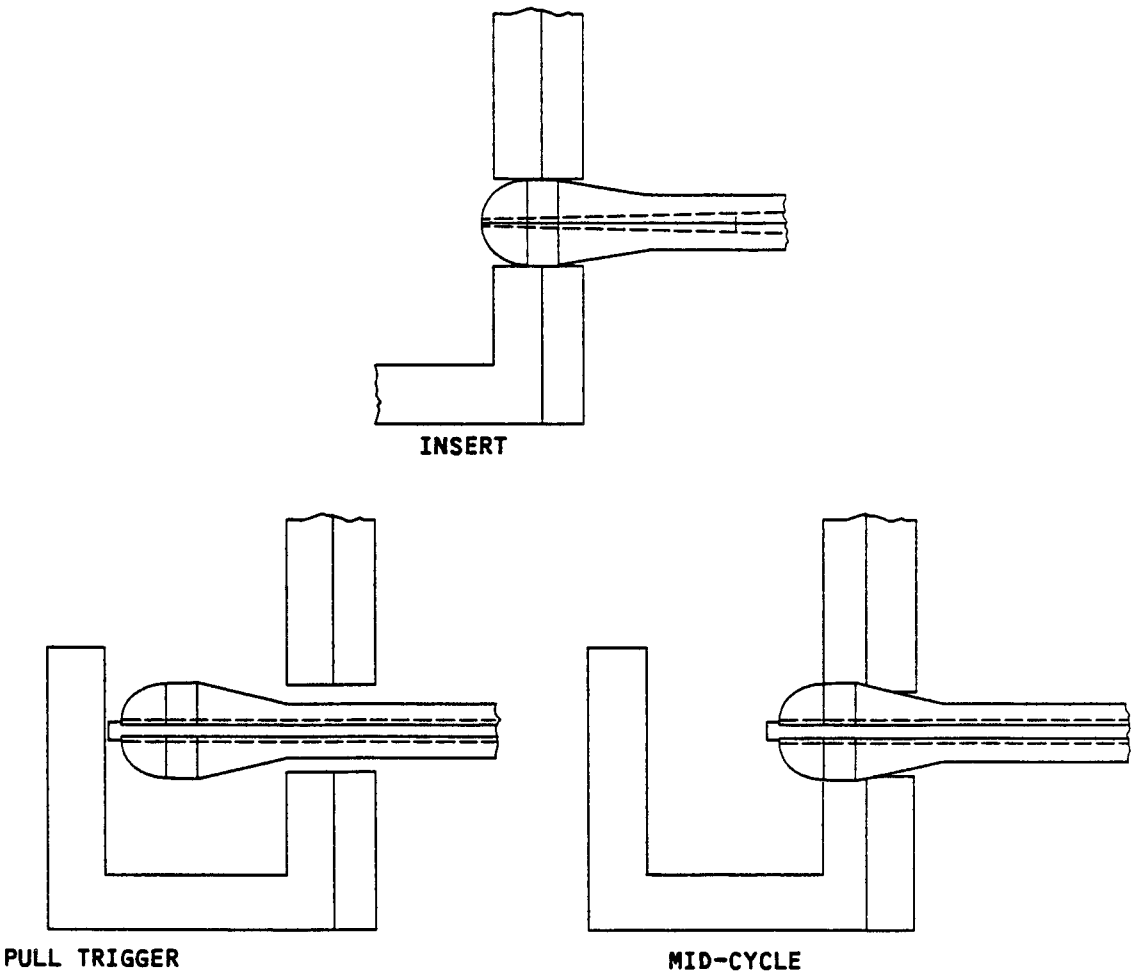

Mandrel Positions in High Interference Sleeveless Cold Working Process
Figure 5

275855

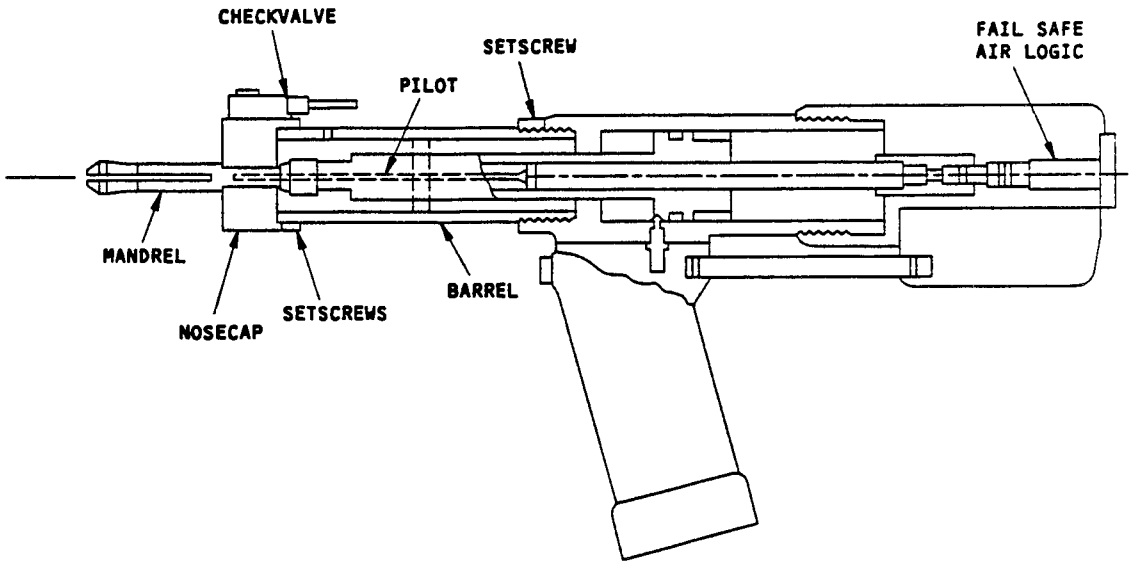

Puller For High Interference Sleeveless Cold Working Process
Figure 6

275864

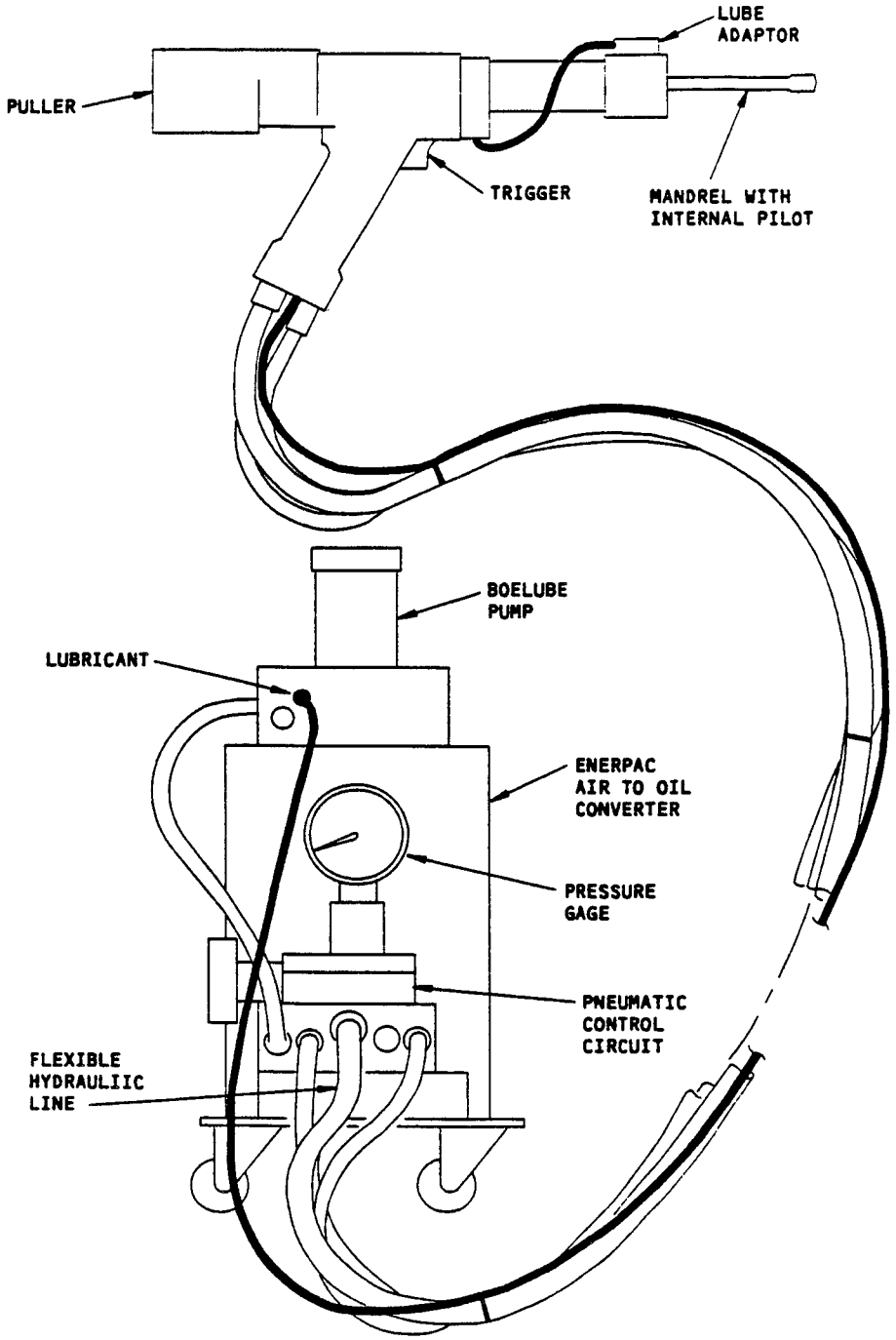

ENERPAC SYSTEM

Setup For High Interference Sleeveless Cold Working Process
Figure 7

275879

TOOL NOMENCLATURE AND NUMBER	SOURCE
MANDREL PULLER KITS [A] MITBAC5973 [B] [C] 2MITBAC5973 [B] [C] 3MITBAC5973 [B] [C] MANDREL ST5300-CBM ST5300-CWM ST5300-CMM SLEEVE ST5300-CBS [B] ST5300-CWS [C] (ALL DASH NUMBERS)	WEST COAST INDUSTRIES 14900 WHITMAN AVE N. SEATTLE, WASHINGTON, USA 98133 FATIGUE TECHNOLOGY INC. 150 ANDOVER PARK WEST P.O. BOX C-88388 SEATTLE, WASHINGTON, USA 98188
POWER SOURCE 4MITBAC5973 (FOR MITBAC5973, 2MITBAC5973, AND 3MITBAC5973 MANDREL PULLER KITS)	4MITBAC5973 HAS BEEN SUPERSEDED BY VENDOR DESIGNED PRODUCTS
POWER SOURCE POWER PAK (FOR WCI PULLER UNITS) WCI 10,000 (SLEEVELESS) OR WCI 10,000-OTC (SLEEVELESS) WCIS 10,000 (SLEEVE) OR WCIS 10,000-OTC (SLEEVE) WCI 20 (PORTABLE EQUIVALENT TO FT 20)	WEST COAST INDUSTRIES 14900 WHITMAN AVE N. SEATTLE, WASHINGTON, USA 98133
POWER SOURCE POWER PAK (FOR FTI PULLER UNITS) FT 200B (SLEEVE) FT 20 (PORTABLE UNIT)	FATIGUE TECHNOLOGY INC. 150 ANDOVER PARK WEST P.O. BOX C-88388 SEATTLE, WASHINGTON, USA 98188

NOTES

[A] KIT INCLUDES HYDRAULIC PULLER COMPLETE THREADED NOSE CAP ASSEMBLIES, CHUCKS AND THREADED ADAPTER, OFFSET ADAPTER, QUICK DISCONNECT FITTINGS, SET OF JAW ASSEMBLIES AND SET OF DRAWINGS OF TOOL DETAILS

[B] THESE ARE BASIC TOOL NUMBERS, NOMENCLATURE, OR KIT NUMBERS FOR THE HIGH INTERFERENCE SLEEVE COLD WORKING PROCESS SHOWN IN FIG. 1. FOR TOOLS FOR THE ALTERNATE HIGH INTERFERENCE SLEEVE COLD WORKING PROCESS, REFER TO FIG. 2

[C] THESE ARE BASIC TOOL NUMBERS, NOMENCLATURE, OR KIT NUMBERS FOR THE LOW INTERFERENCE SLEEVE COLD WORKING PROCESS SHOWN IN FIG. 3

Tools for Cold Working of Holes
Figure 8

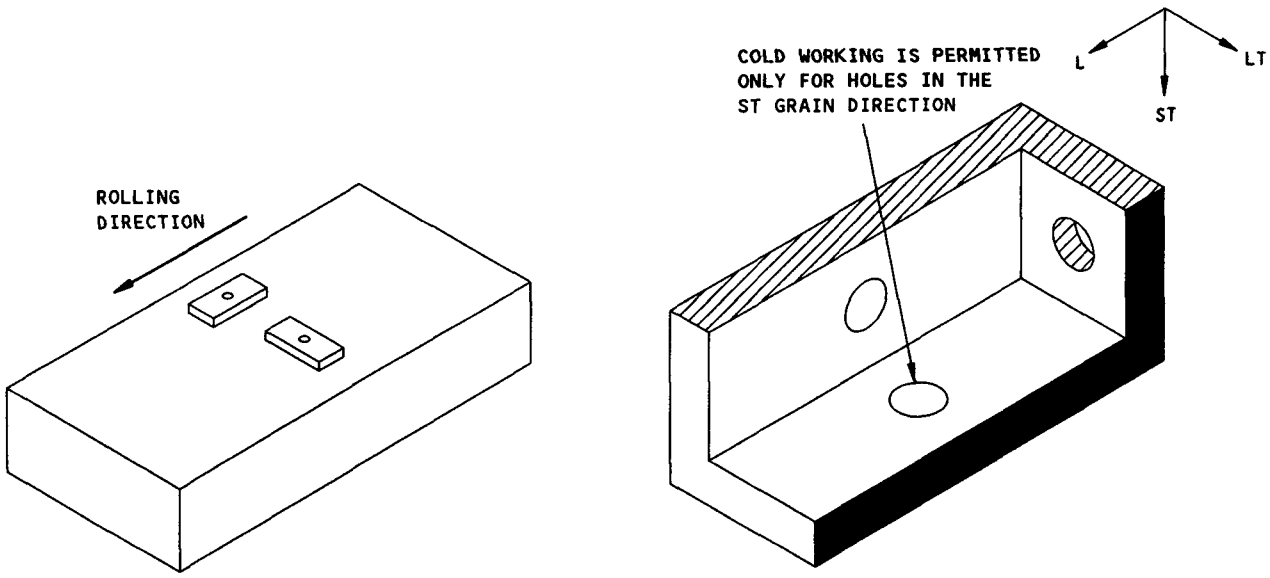

APPROVED

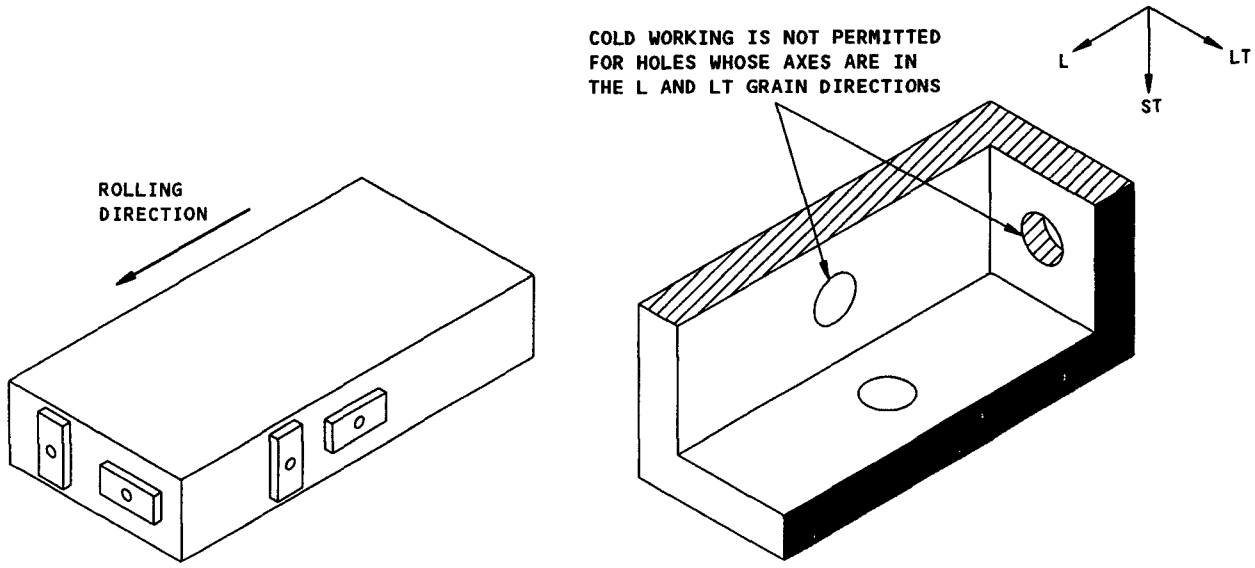

NOT APPROVED

L = LONGITUDINAL GRAIN DIRECTION
LT = LONG TRANSVERSE GRAIN DIRECTION
ST = SHORT TRANSVERSE GRAIN DIRECTION

Cold Working Limits in 7050-T74XX and 7050-T76XX Material
Figure 9

BOEING PROPRIETARY - Copyright © - Unpublished Work - See title page for details.

STRENGTH OF FASTENERS

1. General

A. The fastener strength values given in this subject take into consideration the bearing strength of the material in which the fasteners are installed. This means that where the material will fail in bearing before fastener failure, the lower figure will be shown as the strength of the fastener.

B. The fastener strength values assume that the correct holes sizes have been used (Ref 51-30-5) and that edge margin requirements have been met (Ref 51-30-6).

C. The fastener substitution factors for the MS20470D/BACR15BB()D rivets and the MS20426D/BACR15BA()D rivets are given in Fig. 8 and 9.

(1) The quantity of substitute rivets is calculated by multiplying the initial fastener data by the quantity factor given in the applicable fastener table.

(2) Make sure that you have sufficient edge margin if you use an alternative rivet that has a larger diameter than the initial rivet.

(3) In areas where there is minimum edge margins, then you must refer to SRM 51-30-6.

(4) Use the riveted material gage that gives the highest multiplication factor when you look for fastener substitutions in Fig. 8 and 9.

NOTE: The substitution tables given in Fig. 8 and 9 do not apply to these areas on the airplane.

- Skin, stringers and circumferential frames in the airplane fuselage
- Wing interspar skins and stiffeners, or any other areas where pressure or fuel tank sealing is specified
- Wing leading edge skins
- Vertical and horizontal stabilizer interspar skins
- Interspar skins on the trailing edge flaps
- Horizontal and vertical stabilizer leading edge skin

If they are permitted, alternative fasteners that are necessary for repairs in the above areas can be found in the applicable SRM repair figure.

D. Refer to the following table for the location of fastener strengths contained in this subject.

BOEING PROPRIETARY - Copyright © - Unpublished Work - See title page for details.

FASTENER			LOCATION	
TYPE	PART NUMBER	SHEET OR PLATE MATERIAL	FIGURE	TABLE
RIVET, UNIVERSAL HEAD, AL	BACR15BB-D BACR15BB-AD BACR15BB-DD MS20470D	2024-T3	1	I
		2024-T4	1	II
		2024-T42	1	II
		2024-T42 TUBE	1	II
		7075-T6	1	III
		7075-T6 BAR/ROD	1	III
		7075-T6, -T6510, -T6511 EXTRUSIONS	1	III
		7178-T6	1	IV
RIVET, 100° FLUSH HEAD, AL	BACR15BA-D BACR15BA-AD BACR15BA-DD MS20426D BACR15CE-D	2024-T3 2024-T42 7075-T6 7178-T6	1	V
RIVET, UNIVERSAL HEAD, MONEL	MS20615M	301-1/4 HARD CRES	1	VI
RIVET, 100° FLUSH HEAD, MONEL	MS20427M	301-1/4 HARD 301-1/2 HARD 301-FULL HARD 302-ANNEALED } CRES	1	VI
RIVET, BLIND, UNIVERSAL HEAD, 5056 AL SLEEVE	NAS1398B	2024-T3	2	I
RIVET, BLIND, UNIVERSAL HEAD, 2017 AL SLEEVE	NAS1398D	2024-T3	2	I
RIVET, BLIND, 100° FLUSH HEAD, 5056 AL SLEEVE	NAS1399B	2024-T3	2	I
RIVET BLIND 100° FLUSH HEAD, 2017 AL SLEEVE	NAS1399D	2024-T3	2	I
RIVET, BLIND, UNIVERSAL HEAD	NAS1738E	2024-T3 7075-T6	2	II
RIVET, BLIND, 100° FLUSH HEAD	NAS1739E	2024-T3 7075-T6	2	II
BOLT, BLIND, UNIVERSAL HEAD	BACB30LB MS90354	2024-T3	2	III
		7075-T6	2	IV
BOLT, BLIND, 100° FLUSH HEAD	BACB30LA MS90353	2024-T3	2	III
		7075-T6	2	IV

FASTENER				LOCATION	
TYPE	PART NUMBER		SHEET OR PLATE MATERIAL	FIGURE	TABLE
PROTRUDING HEAD BOLTS, LOCKBOLTS, HEX-DRIVE BOLTS	BACB30DX BACB30LJ BACB30LK BACB30LM BACB30LN BACB30MB BACB30MR BACB30NE BACB30NF BACB30NM BACB30NR BACB30NT	BACB30NX BACB30PF BACB30PU BACB30PW MS20004-24 NAS623 NAS673-678 NAS1218 NAS1223-1235 NAS1303-1320 NAS1465-1472 NAS6965-6972	2024-T3	3	I
			2024-T4	3	II
			2024-T42	3	II
			2024-T42 TUBE	3	II
			7075-T6	3	III
			7075-T6 BAR/ROD	3	III
			7075-T6, -T6510, -T6511 EXTRUSION	3	III
			7178-T6	3	IV
STANDARD FLUSH HEAD BOLTS, LOCKBOLTS, HEX-DRIVE BOLTS	BACB30AB BACB30EM BACB30FL BACB30GX BACB30JC BACB30LH BACB30LP BACB30LR BACB30LU BACB30MS	BACB30NN BACB30NY BACB30PC NAS333-340 NAS517 NAS583-590 NAS663-668 NAS1221 NAS1456-1462	2024-T3	4	I
			7075-T6	4	II
			7178-T6	4	III
SHEAR FLUSH HEAD BOLTS, SHEAR, FLUSH AND PROTRUDING HEAD LOCKBOLTS AND HEX-DRIVE BOLTS	BACB30EL BACB30FB BACB30FM BACB30FN BACB30GW BACB30GY	BACB30LL BACB30MY BACB30NU BACB30NW NAS1436-1442 NAS1446-1452	2024-T3	5	I
			7075-T6	5	II
			7178-T6	5	III
SHEAR FLUSH HEAD TAPER SHANK BOLTS	BACB30KD		7075-T6	6	I
70° HEAD RADIUS LEAD-IN BOLTS	BACB30PT		7075-T6	7	I
FASTENER SUBSTITUTION FOR MS20470D AND BACR15BB()D UNIVERSAL HEAD RIVETS	NAS1398 BACR15BB()AD() MS20470AD NAS1738E		2024-T3 2024-T4 7075-T6	8	
FASTENER SUBSTITUTION FOR MS20426D AND BACR15BA()D RIVETS IN COUNTERSUNK HOLES	NAS1399 BACR15BA()AD() MS20426AD NAS1739E		2024-T3 2024-T4 7075-T6	9	

TABLE OF CONTENTS (CONT)

BOEING PROPRIETARY - Copyright © - Unpublished Work - See title page for details.

RIVET DIAMETER			1/8		5/32		3/16			1/4		5/16		3/8	
MATERIAL			2117	2017	2117	2017	2117	2017	2024	2017	2024	2017	2024	2017	2024
CODE			XC	BM XZK	XC	BM XZK	XC	BM XZK	XD	BM XZK	XD	BM XZK	XD	BM XZK	XD
SINGLE SHEAR (LBS)			369	467	575	730	830	1050	1130	1870	2010	2910	3140	4180	4510
SINGLE SHEAR ALLOWABLE (LBS)	MATERIAL GAGE	0.025	319	319											
		0.032	356	408	510	510									
		0.040	367	465	555	635	765	765	765						
		0.050			570	725	805	955	955	1270	1270				
		0.056			575	730	815	1030	1070	1430	1430				
		0.063					830	1050	1130	1650	1650	2070	2070		
		0.071								1830	1860	2330	2330	2800	2800
		0.080								1860	2000	2620	2620	3150	3150
		0.090								1870	2010	2850	2950	3540	3540
		0.100										2890	3120	3940	3940
		0.112										2910	3140	4120	4410
		0.125												4180	4510
DOUBLE SHEAR ALLOWABLE (LBS)	MATERIAL GAGE	0.050	635	635	795	795	955	955	955	1270	1270				
		0.056	670	715	890	890	1070	1070	1070	1430	1430				
		0.063	690	825	1000	1030	1240	1240	1240	1650	1650	2070	2070		
		0.071	715	900	1040	1160	1400	1400	1400	1860	1860	2330	2330	2800	2800
		0.080	730	925	1080	1310	1480	1570	1570	2100	2100	2620	2620	3150	3150
		0.090	738	934	1110	1410	1530	1770	1770	2360	2360	2950	2950	3540	3540
		0.100			1140	1450	1580	1970	1970	2620	2620	3280	3280	3940	3940
		0.112			1150	1460	1620	2050	2200	2940	2940	3670	3670	4410	4410
		0.125					1660	2100	2260	3280	3280	4100	4100	4920	4920
		0.160								3710	3990	5300	5300	6300	6300
		0.190								3740	4020	5700	6150	7500	7500
		0.250										5820	6280	8360	9020

UNIVERSAL HEAD RIVETS IN: CLAD OR BARE 2024-T3 SHEET

FASTENER CODE:

XC = BACR15BB-AD
BM = MS20470D
XD = BACR15BB-DD
XZK = BACR15BB-D

TABLE I

Strengths of Solid Rivets
Figure 1 (Sheet 1)

RIVET DIAMETER			1/8		5/32		3/16			1/4		5/16		3/8	
MATERIAL			2117	2017	2117	2017	2117	2017	2024	2017	2024	2017	2024	2017	2024
CODE			XC	BM XZK	XC	BM XZK	XC	BM XZK	XD	BM XZK	XD	BM XZK	XD	BM XZK	XD
SINGLE SHEAR (LBS)			369	467	575	730	830	1050	1130	1870	2010	2910	3140	4180	4510
SINGLE SHEAR ALLOWABLE (LBS)	MATERIAL GAGE	0.025	244	244											
		0.032	312	312	390	390									
		0.040	367	390	487	487	585	585	585						
		0.050		467	570	610	730	730	730	975	975				
		0.056			575	680	815	820	820	1090	1090				
		0.063				730	830	990	990	1320	1320	1650	1650		
		0.071						1050	1120	1490	1490	1860	1860	2240	2240
		0.080							1130	1680	1680	2100	2100	2520	2520
		0.090								1870	1890	2360	2360	2830	2830
		0.100									2010	2620	2620	3150	3150
		0.112										2910	2940	3530	3530
		0.125											3140	3940	3940
		0.140												4180	4410
		0.160													4510
DOUBLE SHEAR ALLOWABLE (LBS)	MATERIAL GAGE	0.050	487	487	610	610	730	730	730	975	975				
		0.056	545	545	680	680	820	820	820	1090	1090				
		0.063	660	660	825	825	990	990	990	1320	1320	1650	1650		
		0.071	715	745	930	930	1120	1120	1120	1490	1490	1860	1860	2240	2240
		0.080	730	840	1050	1050	1260	1260	1260	1680	1680	2100	2100	2520	2520
		0.090	738	934	1110	1180	1420	1420	1420	1890	1890	2360	2360	2830	2830
		0.100			1140	1310	1570	1570	1570	2100	2100	2620	2620	3150	3150
		0.112			1150	1460	1620	1760	1760	2350	2350	2940	2940	3530	3530
		0.125					1660	1970	1970	2620	2620	3280	3280	3940	3940
		0.160						2100	2260	3360	3360	4200	4200	5050	5050
		0.190								3740	3990	4990	4990	6000	6000
		0.250									4020	5820	6200	7450	7450
		0.312												8360	9020

UNIVERSAL HEAD RIVETS IN:
- CLAD 2024-T4 SHEET
- BARE 2024-T4 SHEET
- CLAD 2024-T42 SHEET
- BARE 2024-T42 SHEET
- 2024-T42 TUBE

FASTENER CODE:
- XC = BACR15BB-AD
- BM = MS20470D
- XD = BACR15BB-DD
- XZK = BACR15BB-D

TABLE II

Strengths of Solid Rivets
Figure 1 (Sheet 2)

RIVET DIAMETER			1/8		5/32		3/16			1/4		5/16		3/8	
MATERIAL			2117	2017	2117	2017	2117	2017	2024	2017	2024	2017	2024	2017	2024
CODE			XC	BM XZK	XC	BM XZK	XC	BM XZK	XD	BM XZK	XD	BM XZK	XD	BM XZK	XD
SINGLE SHEAR (LBS)			369	467	575	730	830	1050	1130	1870	2010	2910	3140	4180	4510
SINGLE SHEAR ALLOWABLE (LBS)	MATERIAL GAGE	0.025	334	334											
		0.032	356	428	530	535									
		0.040	367	465	555	680	775	815	815						
		0.050			570	725	805	1020	1020	1360	1360				
		0.056			575	730	815	1030	1110	1530	1530				
		0.063					830	1050	1130	1730	1730	2170	2170		
		0.071								1830	1950	2440	2440	2930	2930
		0.080								1860	2000	2750	2750	3300	3300
		0.090								1870	2010	2850	3080	3710	3710
		0.100										2890	3120	4060	4120
		0.112										2910	3140	4120	4450
		0.125												4180	4510
DOUBLE SHEAR ALLOWABLE (LBS)	MATERIAL GAGE	0.050	640	680	850	850	1020	1020	1020	1360	1360				
		0.056	670	765	955	955	1140	1140	1140	1530	1530				
		0.063	690	865	1000	1080	1300	1300	1300	1730	1730	2170	2170		
		0.071	715	900	1040	1220	1410	1460	1460	1950	1950	2440	2440	2930	2930
		0.080	730	925	1080	1370	1480	1650	1650	2200	2200	2750	2750	3300	3300
		0.090	738	934	1110	1410	1530	1860	1860	2470	2470	3090	3090	3710	3710
		0.100			1140	1450	1580	2000	2060	2750	2750	3440	3440	4120	4120
		0.112			1150	1460	1620	2050	2210	3080	3080	3850	3850	4620	4620
		0.125					1660	2100	2260	3440	3440	4300	4300	5150	5150
		0.160								3710	3990	5500	5500	6600	6600
		0.190								3740	4020	5700	6150	7850	7850
		0.250										5820	6280	8360	9020

UNIVERSAL HEAD RIVETS IN:
- CLAD 7075-T6 SHEET
- BARE 7075-T6 SHEET
- 7075-T6 BAR OR ROD
- 7075-T6, -T6510, -T6511 EXTRUSION (LESS THAN 0.188 THICK)

FASTENER CODE:
- XC = BACR15BB-AD
- BM = MS20470D
- XD = BACR15BB-DD
- XZK = BACR15BB-D

TABLE III

Strengths of Solid Rivets
Figure 1 (Sheet 3)

RIVET DIAMETER			1/8		5/32		3/16			1/4		5/16		3/8	
MATERIAL			2117	2017	2117	2017	2117	2017	2024	2017	2024	2017	2024	2017	2024
CODE			XC	BM XZK	XC	BM XZK	XC	BM XZK	XD	BM XZK	XD	BM XZK	XD	BM XZK	XD
SINGLE SHEAR (LBS)			369	467	575	730	830	1050	1130	1870	2010	2910	3140	4180	4510
SINGLE SHEAR ALLOWABLE (LBS)	MATERIAL GAGE	0.025	339	403											
		0.032	356	450	530	645									
		0.040	367	465	555	705	775	965	965						
		0.050			570	725	805	1020	1100	1660	1660				
		0.056			575	730	815	1030	1110	1760	1860				
		0.063					830	1050	1130	1800	1930	2620	2620		
		0.071								1830	1970	2750	2950	3540	3540
		0.080								1860	2000	2800	3030	3900	3990
		0.090								1870	2010	2850	3080	3980	4300
		0.100										2890	3120	4060	4380
		0.112										2910	3140	4120	4450
		0.125												4180	4510
DOUBLE SHEAR ALLOWABLE (LBS)	MATERIAL GAGE	0.050	640	815	905	1040	1170	1250	1250	1660	1660				
		0.056	670	845	955	1160	1260	1400	1400	1860	1860				
		0.063	690	875	1000	1270	1340	1570	1570	2090	2090	2620	2620		
		0.071	715	900	1040	1330	1410	1770	1770	2360	2360	2950	2950	3540	3540
		0.080	730	925	1080	1370	1480	1870	1990	2660	2660	3320	3320	3990	3990
		0.090	738	934	1110	1410	1530	1940	2090	2990	2990	3740	3740	4490	4490
		0.100			1140	1450	1580	2000	2150	3250	3320	4160	4160	4990	4990
		0.112			1150	1460	1620	2050	2210	3380	3640	4650	4650	5600	5600
		0.125					1660	2100	2260	3500	3760	5050	5200	6250	6250
		0.160								3710	3990	5500	5900	7450	8000
		0.190								3740	4020	5700	6150	7850	8450
		0.250										5820	6280	8360	9020

UNIVERSAL HEAD RIVETS IN:
CLAD OR BARE 7178-T6 SHEET

FASTENER CODE:
XC = BACR15BB-AD
BM = MS20470D
XD = BACR15BB-DD
XZK = BACR15BB-D

TABLE IV

Strengths of Solid Rivets
Figure 1 (Sheet 4)

			100° COUNTERSUNK HEAD								100° SHEAR HEAD			
RIVET DIAMETER			5/32		3/16			1/4		5/16	1/8	5/32	3/16	1/4
MATERIAL			2117	2017	2117	2017	2024	2017	2024	2017	2017			
CODE			XA	BE XZG	XA	BE XZG	XB	BE XZG	XB	BE XZG	XF			
SINGLE SHEAR (LBS)			575	730	830	1050	1130	1870	2010	2915	467	730	1050	1870
SINGLE SHEAR ALLOWABLE (LBS)	MATERIAL GAGE	0.025									195			
		0.028									230			
		0.032	300								280	315		
		0.036	349								325	375		
		0.040	398	405	409						360	435	485	
		0.045	435	455	525						395	500	575	
		0.050	481	520	585	630	760				430	560	665	780
		0.056	495	550	655	680	830				467	620	760	925
		0.063	525	600	705	775	885	915	1210	1630		675	840	1090
		0.071	540	690	740	835	940	1060	1350	1760		730	925	1280
		0.080	560	720	770	935	990	1180	1470	1970			1010	1440
		0.090	575	730	795	1010	1030	1290	1580	2040			1050	1580
		0.100			820	1050	1070	1520	1670	2460				1720
		0.112			830		1130	1700	1780	2520				1870
		0.125						1770	1880	2580				
		0.160						1870	2000	2740				
		0.180							2010	2830				

COUNTERSUNK HEAD RIVETS IN:
CLAD OR BARE 2024-T3, 2024-T42, 7075-T6, 7178-T6 SHEET

FASTENER CODE:
XA = BACR15BA-AD
BE = MS20426D
XB = BACR15BA-DD
XF = BACR15CE-D
XZG = BACR15BA-D

TABLE V

Strengths of Solid Rivets
Figure 1 (Sheet 5)

	MS20615M				MS20427M								
	CODE: LN				CODE: BF								
	UNIVERSAL HEAD IN 301-1/4 HARD CRES SHEET				100° FLUSH HEAD IN 301-1/4 HARD CRES SHEET			100° FLUSH HEAD IN 301-1/2 HARD AND 301 FULL HARD CRES SHEET			100° FLUSH HEAD IN 302 ANNEED CRES SHEET		
RIVET DIAMETER	1/8	5/32	3/16	1/4	1/8	5/32	3/16	1/8	5/32	3/16	1/8	5/32	3/16
SINGLE SHEAR (LBS)	605	940	1350	2410	605	940	1350	605	940	1350	605	940	1350
MATERIAL GAGE	SINGLE SHEAR ALLOWABLES (LBS)												
0.020					300			321			193		
0.025	555				361	463		396	496		243	295	
0.032	585	870			431	590	705	431	625	765	309	384	457
0.040	600	905	1260		439	665	860	439	665	915	388	481	580
0.050	605	935	1310	2220	468	675	955	447	675	955	486	605	720
0.063		940	1350	2320	595	730	970	540	690	970	605	760	905
0.071				2360	605	830	990	605	740	985		855	1030
0.080				2400		935	1120		850	995		940	1160
0.090				2410		940	1250		940	1130			1300
0.100							1350			1280			1350
0.125										1350			

MS20615M AND MS20427M RIVETS IN CRES SHEET

TABLE VI

Strengths of Solid Rivets
Figure 1 (Sheet 6)

	UNIVERSAL HEAD								100° RIVETS IN COUNTERSUNK HOLES							
	NAS1398B				NAS1398D				NAS1399B				NAS1399D			
	CODE: RK				CODE: RL				CODE: RO				CODE: RP			
RIVET DIAMETER	1/8	5/32	3/16	1/4	1/8	5/32	3/16	1/4	1/8	5/32	3/16	1/4	1/8	5/32	3/16	1/4
SINGLE SHEAR (LBS)	388	595	860	1550	495	755	1090	1970	388	595	860	1550	495	755	1090	1970
TENSION (LBS)	230	375	540	1000	230	375	540	1000	230	375	540	1000	230	375	540	1000
67% TENSION (LBS)	154	251	361	670	154	251	361	670	154	251	361	670	154	251	361	670
MATERIAL GAGE	SINGLE SHEAR ALLOWABLES (LBS)															
0.020	155	180			155	180			35	45			35	45		
0.025	210	240	260		215	245	260		50	60	65		50	60	70	
0.032	260	325	375	445	270	340	375	445	70	75	90	110	70	75	95	115
0.036	285	365	430	530	300	380	455	530	80	90	100	125	80	90	105	130
0.040	305	405	490	620	320	415	510	620	95	105	115	145	95	105	140	150
0.045	330	450	545	705	345	460	570	750	115	125	140	175	120	130	155	180
0.050	350	475	595	805	370	495	625	840	135	150	165	195	150	160	180	200
0.056	370	515	655	905	395	535	680	935	170	175	190	230	190	200	235	240
0.063		545	700	1010	425	580	735	1050	200	215	230	265	230	245	310	320
0.071		570	760	1110	450	610	795	1160	250	260	280	320	290	295	390	400
0.080			810	1210	480	650	845	1250	330	340	350	375	340	360	490	500
0.090			815	1290		700	910	1350	370	405	415	455	415	455	580	625
0.100				1380		740	965	1450		510	520	540	480	535	695	755
0.112				1440			1030	1540		570	635	650		630	850	915
0.125							1060	1640			815	825		740	985	1090
0.140								1750				980			1060	1370
0.160								1870				1320				1670

NAS1398 AND NAS1399 RIVETS IN 2024-T3 BARE OR CLAD SHEET

NOTES

- MINIMUM BLIND SIDE SHEET THICKNESS ALLOWED IS EQUAL TO 1/4 RIVET DIAMETER. FOR THINNER MATERIAL USE NAS1738E OR NAS1739E RIVETS (SEE TABLE II).
- ALLOWABLES ABOVE THE THICK LINE ARE FOR GAGES LESS THAN THE RECOMMENDED MINIMUM.
- USE 67% TENSION FOR PRIMARY STRUCTURE OR WHERE REVERSING LOADS ARE EXPECTED.

TABLE I

Strength of Blind Fasteners
Figure 2 (Sheet 1)

	NAS1739E			NAS1738E					
	CODE: AAV			CODE: AAP					
	100° FLUSH HEAD IN 2024-T3 OR 7075-T6, BARE OR CLAD			UNIVERSAL HEAD IN 2024-T3, BARE OR CLAD			UNIVERSAL HEAD IN 7075-T6, BARE OR CLAD		
RIVET DIAMETER	1/8	5/32	3/16	1/8	5/32	3/16	1/8	5/32	3/16
SINGLE SHEAR (LBS)	620	935	1260	620	935	1260	620	935	1260
TENSION (LBS)	345	530	710	345	530	710	345	530	710
67% TENSION (LBS)	232	356	476	232	356	476	232	356	476
MATERIAL GAGE	SINGLE SHEAR ALLOWABLES (LBS)								
0.020				157			268		
0.025				200	244		292	409	
0.032	201			252	318	361	328	454	570
0.036	228	277		286	351	411	355	477	600
0.040	256	309	352	316	394	454	372	500	630
0.045	286	352	410	354	435	510	396	535	675
0.050	324	394	454	396	486	570	426	565	710
0.056	360	445	510	447	545	635	459	615	755
0.063	407	500	575	486	620	720	500	665	815
0.071	449	560	660	530	685	810	540	710	875
0.080	497	635	740	580	750	920	590	770	940
0.090	545	695	835	615	820	1000	615	840	1020
0.100	600	765	915		895	1080		900	1110
0.112	615	840	1000		935	1170		935	1200
0.125		920	1090			1260			1260
0.140		935	1210						
0.160			1260						

NAS1738E AND NAS1739E RIVETS IN 7075-T6 AND 2024-T3 BARE OR CLAD SHEET

NOTES

- ACTUAL RIVET DIAMETERS ARE APPROX 1/64 LARGER THAN NOMINAL SIZE SHOWN.
- ALLOWABLES ABOVE THE THICK LINE ARE FOR GAGES LESS THAN THE RECOMMENDED MINIMUM.
- USE 67% TENSION FOR PRIMARY STRUCTURE OR WHERE REVERSING LOADS ARE EXPECTED.

TABLE II

Strength of Blind Fasteners
Figure 2 (Sheet 2)

FASTENER	BLIND BOLT MS90353,MS90354,BACB30LA AND BACB30LB				
HEAD	100° FLUSH AND UNIVERSAL HEAD				
FASTENER DIAMETER	5/32	3/16	1/4	5/16	3/8
SHEAR (LBS)	2340	3450	5900	8500	12200
TENSION (LBS)	1350	2100	3650	5200	7500
67% TENSION (LBS)	905	1407	2445	3484	5025
MATERIAL GAGE	SINGLE SHEAR ALLOWABLES (LBS)				
0.040	327				
0.045	402				
0.050	498	520			
0.056	590	640			
0.063	710	755	800		
0.071	825	960	995		
0.080	980	1130	1240	1280	
0.090	1150	1300	1540	1650	1660
0.100	1300	1510	1790	1840	1960
0.112	1510	1770	2090	2370	2480
0.125	1720	2000	2440	2730	3000
0.140	1880	2320	2830	3240	3510
0.160	2020	2730	3340	3810	4330
0.190	2200	3000	4140	4810	5350
0.250	2340	3450	5150	6700	7750
0.312			5900	7600	9950
0.375				8500	11000
0.437					11900
0.500					12200

MS90353,MS90354 AND BACB30LA,BACB30LB BLIND BOLTS IN 2024-T3 CLAD OR BARE SHEET

NOTES

- USE 67% TENSION FOR PRIMARY STRUCTURE OR WHERE REVERSING LOADS ARE EXPECTED
- ALLOWABLES ABOVE THE THICK LINE ARE FOR GAGES LESS THAN THE RECOMMENDED MINIMUM (100° FLUSH HEAD ONLY)

TABLE III

Strengths of Blind Fasteners
Figure 2 (Sheet 3)

FASTENER	BLIND BOLT MS90353,MS90354,BACB30LA AND BACB30LB				
HEAD	100° FLUSH AND UNIVERSAL HEAD				
FASTENER DIAMETER	5/32	3/16	1/4	5/16	3/8
SINGLE SHEAR (LBS)	2340	3450	5900	8500	12200
TENSION (LBS)	1350	2100	3650	5200	7500
67% TENSION (LBS)	905	1407	2445	3484	5025
MATERIAL GAGE	SINGLE SHEAR ALLOWABLES (LBS)				
0.040	384				
0.045	520				
0.050	635				
0.056	765	815			
0.063	960	1020			
0.071	1130	1240	1240		
0.080	1290	1510	1590		
0.090	1450	1780	1990	2080	
0.100	1580	1980	2390	2590	2590
0.112	1690	2140	2840	3100	3100
0.125	1850	2390	3260	3750	3820
0.140	1980	2550	3660	4370	4750
0.160	2160	2870	4000	4980	5800
0.190	2340	3200	4620	5700	7050
0.250		3450	5500	7050	8700
0.312			5900	8100	10400
0.375				8500	11700
0.437					12200

MS90353,MS90354 AND BACB30LA,BACB30LB BLIND BOLTS IN 7075-T6 CLAD OR BARE SHEET

NOTES

- USE 67% TENSION FOR PRIMARY STRUCTURE OR WHERE REVERSING LOADS ARE EXPECTED
- ALLOWABLES ABOVE THE THICK LINE ARE FOR GAGES LESS THAN THE RECOMMENDED MINIMUM (100° FLUSH HEAD ONLY)

TABLE IV

Strengths of Blind Fasteners
Figure 2 (Sheet 4)

FASTENER PART NUMBERS			BACB30DX BACB30LJ BACB30LK BACB30LM BACB30LN BACB30MB BACB30MR	BACB30NE BACB30NF BACB30NM BACB30NR BACB30NT BACB30NX BACB30PF	BACB30PU BACB30PW MS20004-24 NAS623 NAS673-678 NAS1218 NAS1223-1235				NAS1303-1320 NAS1465-1472 NAS6965-6972	
FASTENER DIAMETER			3/16	1/4	5/16	3/8	7/16	1/2	9/16	5/8
SINGLE SHEAR (LBS)			2690	4650	7250	10400	14200	18600	23600	29150
SINGLE SHEAR BEARING STRENGTH (LBS)	MATERIAL GAGE	0.063	1260	1650	2070					
		0.071	1420	1860	2330	2800				
		0.080	1600	2100	2620	3150	3670			
		0.090	1790	2360	2950	3540	4130			
		0.100	1990	2620	3280	3940	4600	5250		
		0.112	2230	2940	3670	4410	5150	5900	6600	
		0.125	2490	3280	4100	4920	5750	6550	7400	8200
		0.140	2690	3710	4640	5550	6500	7400	8350	9250
		0.160		4240	5300	6350	7400	8500	9550	10600
		0.180		4650	5950	7150	8350	9550	10700	11900
		0.200			6600	7950	9250	10600	11900	13200
		0.224			7250	8900	10400	11900	13400	14800
		0.250				9900	11600	13200	14900	16600
		0.312				10400	14200	16500	18600	20700
		0.375						18600	22400	24800
		0.500							23600	29150
		0.562								
		0.625								

95 KSI PROTRUDING HEAD BOLTS, LOCKBOLTS AND HEX-DRIVE BOLTS IN CLAD OR BARE 2024-T3 SHEET OR PLATE

TABLE I

Strengths of Protruding Head Bolts, Lockbolts, and Hex-Drive Bolts
Figure 3 (Sheet 1)

FASTENER PART NUMBERS			BACB30DX BACB30LJ BACB30LK BACB30LM BACB30LN BACB30MB BACB30MR	BACB30NE BACB30NF BACB30NM BACB30NR BACB30NT BACB30NX BACB30PF	BACB30PU BACB30PW MS20004-24 NAS623 NAS673-678 NAS1218 NAS1223-1235				NAS1303-1320 NAS1465-1472 NAS6965-6972	
FASTENER DIAMETER			3/16	1/4	5/16	3/8	7/16	1/2	9/16	5/8
SINGLE SHEAR (LBS)			2690	4650	7250	10400	14200	18600	23600	29150
SINGLE SHEAR BEARING STRENGTH (LBS)	MATERIAL GAGE	0.063	1000	1320	1650					
		0.071	1130	1490	1860	2240				
		0.080	1280	1680	2100	2520				
		0.090	1440	1890	2360	2830	3310	3780	4250	
		0.100	1600	2100	2620	3150	3670	4200	4720	
		0.112	1790	2350	2940	3530	4120	4900	5300	
		0.125	1990	2620	3280	3940	4590	5250	5900	6550
		0.140	2230	2940	3670	4410	5150	5900	6600	7350
		0.160	2550	3360	4200	5050	5900	6700	7550	8400
		0.180	2690	3780	4720	5650	6600	7550	8500	9450
		0.200		4200	5250	6300	7350	8400	9450	10500
		0.224		4650	5900	7050	8250	9400	10600	11800
		0.250			6200	7450	9000	9950	11200	12400
		0.312			7250	9300	10900	12400	14000	15500
		0.375				10400	13000	14900	16800	18600
		0.500					14200	18600	22400	24800
		0.562							23600	27900
		0.625								29150

95 KSI PROTRUDING HEAD BOLTS, LOCKBOLTS AND HEX-DRIVE BOLTS IN:

2024-T42 CLAD OR BARE, SHEET OR PLATE
2024-T4 CLAD SHEET OR PLATE
2024-T42 TUBE

TABLE II

Strengths of Protruding Head Bolts, Lockbolts, and Hex-Drive Bolts
Figure 3 (Sheet 2)

FASTENER PART NUMBERS			BACB30DX BACB30LJ BACB30LK BACB30LM BACB30LN BACB30MB BACB30MR	BACB30NE BACB30NF BACB30NM BACB30NR BACB30NT BACB30NX BACB30PF	BACB30PU BACB30PW MS20004-24 NAS623 NAS673-678 NAS1218 NAS1223-1235			NAS1303-1320 NAS1465-1472 NAS6965-6972		
FASTENER DIAMETER			3/16	1/4	5/16	3/8	7/16	1/2	9/16	5/8
SINGLE SHEAR (LBS)			2690	4650	7250	10400	14200	18600	23600	29150
SINGLE SHEAR BEARING STRENGTH (LBS)	MATERIAL GAGE	0.063	1320	1730	2170					
		0.071	1480	1950	2440	2930				
		0.080	1670	2200	2750	3300	3850			
		0.090	1880	2470	3090	3710	4330			
		0.100	2090	2750	3440	4120	4810	5500		
		0.112	2340	3080	3850	4620	5400	6150		
		0.125	2610	3440	4300	5150	6000	6850	7750	8600
		0.140	2690	3850	4810	5750	6750	7700	8650	9600
		0.160		4400	5500	6600	7700	8800	9900	11000
		0.180		4650	6200	7400	8650	9900	11100	12400
		0.200			6850	8250	9600	11000	12400	13700
		0.224			7250	9250	10800	12300	13900	15400
		0.250				10100	11800	13500	15200	16900
		0.312				10400	14200	16800	19000	21100
		0.375						18600	22800	25300
		0.500							23600	29150
		0.562								
		0.625								

95 KSI PROTRUDING HEAD BOLTS, LOCKBOLTS AND HEX-DRIVE BOLTS IN:

7075-T6 CLAD OR BARE, SHEET OR PLATE
7075-T6 BAR OR ROD
7075-T6, -T6510, -T6511 EXTRUSION (LESS THAN 0.188 THICK)

TABLE III

Strengths of Protruding Head Bolts, Lockbolts, and Hex-Drive Bolts
Figure 3 (Sheet 3)

FASTENER PART NUMBERS			BACB30DX BACB30LJ BACB30LK BACB30LM BACB30LN BACB30MB BACB30MR	BACB30NE BACB30NF BACB30NM BACB30NR BACB30NT BACB30NX BACB30PF	BACB30PU BACB30PW MS20004-24 NAS623 NAS673-678 NAS1218 NAS1223-1235			NAS1303-1320 NAS1465-1472 NAS6965-6972		
FASTENER DIAMETER			3/16	1/4	5/16	3/8	7/16	1/2	9/16	5/8
SINGLE SHEAR (LBS)			2690	4650	7250	10400	14200	18600	23600	29150
SINGLE SHEAR BEARING STRENGTH (LBS)	MATERIAL GAGE	0.063	1590	2090	2620					
		0.071	1790	2360	2950	3540				
		0.080	2020	2660	3320	3990	4650			
		0.090	2270	2990	3740	4490	5250			
		0.100	2530	3320	4160	4990	5800	6650		
		0.112	2690	3720	4650	5600	6500	7450		
		0.125		4160	5200	6250	7250	8300	9350	10400
		0.140		4650	5800	7000	8150	9300	10500	11600
		0.160			6650	8000	9300	10600	12000	13300
		0.180			7250	9000	10500	12000	13500	15000
		0.200				9950	11600	13300	15000	16600
		0.224				10400	13000	14900	16800	18600
		0.250					13700	15600	17600	19500
		0.312					14200	18600	21900	24400
		0.375							23600	29150
		0.500								
		0.562								
		0.625								

95 KSI PROTRUDING HEAD BOLTS, LOCKBOLTS AND HEX-DRIVE BOLTS IN:
CLAD OR BARE 7178-T6 SHEET OR PLATE

TABLE IV

Strengths of Protruding Head Bolts, Lockbolts, and Hex-Drive Bolts
Figure 3 (Sheet 4)

FASTENER PART NUMBERS			BACB30AB BACB30EM BACB30FL BACB30GX BACB30JC BACB30LH BACB30LP		BACB30LR BACB30LU BACB30MS BACB30NN BACB30NY BACB30PC NAS333-340		NAS517 NAS583-590 NAS663-668 NAS1221 NAS1456-1462			
FASTENER DIAMETER			3/16	1/4	5/16	3/8	7/16	1/2	9/16	5/8
SINGLE SHEAR (LBS)			2690	4650	7250	10400	14200	18600	23600	29150
SINGLE SHEAR BEARING STRENGTH (LBS)	MATERIAL GAGE	0.063	1080	1430						
		0.071	1220	1630	1920					
		0.080	1380	1840	2250					
		0.090	1550	2070	2580	2950				
		0.100	1720	2300	2870	3350	3750	4900		
		0.125	2150	2870	3590	4310	5000	5600		
		0.140	2410	3220	4020	4830	5650	6450	7250	
		0.160	2690	3680	4600	5500	6450	7350	8250	
		0.180		4140	5150	6200	7250	8300	9300	
		0.190		4320	5400	6550	7650	8750	9800	
		0.200		4480	5750	6900	8050	9200	10300	
		0.224		4650	6450	7700	9000	10300	11600	
		0.250			6900	8600	10000	11500	12900	
		0.312			7250	10400	12500	14300	16100	
		0.375					14200	17100	19400	
		0.438						18600	22200	
		0.500							23600	

95 KSI STANDARD FLUSH HEAD BOLTS, LOCKBOLTS, AND HEX-DRIVE BOLTS IN:
CLAD OR BARE 2024-T3 SHEET OR PLATE

TABLE I

Strengths of Standard Flush Head Bolts, Lockbolts, and Hex Drive Bolts
Figure 4 (Sheet 1)

FASTENER PART NUMBERS			BACB30AB BACB30EM BACB30FL BACB30GX BACB30JC BACB30LH BACB30LP	BACB30LR BACB30LU BACB30MS BACB30NN BACB30NY BACB30PC NAS333-340	NAS517 NAS583-590 NAS663-668 NAS1221 NAS1456-1462					
FASTENER DIAMETER			3/16	1/4	5/16	3/8	7/16	1/2	9/16	5/8
SINGLE SHEAR (LBS)			2690	4650	7250	10400	14200	18600	23600	29150
SINGLE SHEAR BEARING STRENGTH (LBS)	MATERIAL GAGE	0.063	1180	1690	1900					
		0.071	1270	1870	2390	2570				
		0.080	1420	2020	2700	3000				
		0.090	1590	2170	2980	3640	3940			
		0.100	1800	2370	3180	4050	4720	5000		
		0.125	2460	2920	3710	4680	5800	6750	7600	
		0.140	2690	3370	4140	5050	6200	7450	8500	
		0.160		4080	4770	5600	6800	8100	9500	
		0.180		4640	5450	6250	7400	8750	10300	
		0.190		4650	5950	6650	7700	9100	10600	
		0.200			6350	7100	8100	9500	11000	
		0.224			7240	8300	9100	10400	11700	
		0.250			7250	9900	10600	11800	13200	
		0.312				10400	14200	15600	17100	
		0.375						18500	22000	
		0.500						18600	23600	

95 KSI STANDARD FLUSH HEAD BOLTS, LOCKBOLTS, AND HEX-DRIVE BOLTS IN:
CLAD OR BARE 7075-T6 SHEET OR PLATE

TABLE II

Strengths of Standard Flush Head Bolts, Lockbolts, and Hex Drive Bolts
Figure 4 (Sheet 2)

FASTENER PART NUMBERS			BACB30AB BACB30EM BACB30FL BACB30GX BACB30JC BACB30LH BACB30LP		BACB30LR BACB30LU BACB30MS BACB30NM BACB30NY BACB30PC NAS333-340		NAS517 NAS583-590 NAS663-668 NAS1221 NAS1456-1462			
FASTENER DIAMETER			3/16	1/4	5/16	3/8	7/16	1/2	9/16	5/8
SINGLE SHEAR (LBS)			2690	4650	7250	10400	14200	18600	23600	29150
SINGLE SHEAR BEARING STRENGTH (LBS)	MATERIAL GAGE	0.063	1250	1830	2060					
		0.071	1370	1980	2590	2780				
		0.080	1510	2140	2920	3250				
		0.090	1690	2320	3160	3940	4260			
		0.100	1920	2500	3360	4340	5100	5400		
		0.125	2590	3080	3910	4970	6200	7300	8200	
		0.140	2690	3550	4390	5350	6600	8050	9200	
		0.160		4300	5150	5900	7200	8750	10100	
		0.180		4650	5750	6600	7800	9300	11000	
		0.190			6250	7000	8150	9650	11300	
		0.200			6700	7450	8550	10000	11700	
		0.224			7250	8700	9600	11000	12300	
		0.250				10400	11100	12700	14300	
		0.312					14200	16300	18400	
		0.375						18600	23100	
		0.500							23600	

95 KSI STANDARD FLUSH HEAD BOLTS, LOCKBOLTS, AND HEX-DRIVE BOLTS IN:
CLAD OR BARE 7178-T6 SHEET OR PLATE

TABLE III

Strengths of Standard Flush Head Bolts, Lockbolts, and Hex Drive Bolts
Figure 4 (Sheet 3)

FASTENER PART NUMBERS			BACB30EL BACB30FB BACB30FM BACB30FN BACB30GW BACB30GY BACB30LL			BACB30MY BACB30NU BACB30NW NAS1436-1442 NAS1446-1452				
FASTENER DIAMETER			3/16	1/4	5/16	3/8	7/16	1/2	9/16	5/8
SINGLE SHEAR (LBS)			2690	4650	7250	10400	14200	18600	23600	29150
SINGLE SHEAR BEARING STRENGTH (LBS)	MATERIAL GAGE	0.063	1080	1450	1810					
		0.071	1220	1630	2040	2450				
		0.080	1380	1840	2290	2760	3220			
		0.090	1550	2070	2580	3100	3620	4140		
		0.100	1720	2300	2870	3450	4030	4600	5150	
		0.125	2020	2870	3590	4310	5050	5750	6450	7200
		0.140	2130	3220	4020	4830	5650	6450	7250	8050
		0.160	2170	3490	4590	5500	6450	7350	8250	9200
		0.180	2250	3670	5200	6200	7250	8300	9300	10300
		0.190	2290	3730	5450	6550	7650	8750	9800	10900
		0.200	2330	3790	5600	6900	8050	9200	10300	11500
		0.224	2430	3920	5750	7700	9000	10300	11600	12900
		0.250	2540	4050	5950	8300	10100	11500	12900	14400
		0.312	2690	4650	6350	8650	11300	14200	16200	18000
		0.375			6500	8900	11800	14900	18300	21500
		0.500					12900	16200	19800	23700

95 KSI SHEAR FLUSH HEAD BOLTS, SHEAR FLUSH AND PROTRUDING HEAD LOCKBOLTS AND HEX-DRIVE BOLTS IN:

CLAD OR BARE 2024-T3 SHEET OR PLATE

TABLE I

Strengths of Shear Flush Head Bolts, Shear Flush and Protruding Head Lockbolts and Hex-Drive Bolts

Figure 5 (Sheet 1)

FASTENER PART NUMBERS			BACB30EL BACB30FB BACB30FM BACB30FN BACB30GW BACB30GY BACB30LL			BACB30MY BACB30NU BACB30NW NAS1436-1442 NAS1446-1452				
FASTENER DIAMETER			3/16	1/4	5/16	3/8	7/16	1/2	9/16	5/8
SINGLE SHEAR (LBS)			2690	4650	7250	10400	14200	18600	23600	29150
SINGLE SHEAR BEARING STRENGTH (LBS)	MATERIAL GAGE	0.063	1270	1700	2120					
		0.071	1430	1910	2390	2870				
		0.080	1620	2150	2700	3240	3780			
		0.090	1820	2430	3030	3640	4250	4850		
		0.100	2020	2700	3370	4050	4720	5400	6050	
		0.125	2530	3370	4220	5050	5900	6750	7600	8450
		0.140	2660	3780	4720	5650	6600	7550	8500	9450
		0.160	2690	4320	5400	6500	7550	8650	9700	10800
		0.180		4580	6050	7300	8500	9700	10900	12100
		0.190		4650	6350	7600	8900	10100	11400	12700
		0.200			6500	8100	9450	10800	12100	13500
		0.224				8900	10600	12100	13600	15100
		0.250					11800	13500	15200	16900
		0.312					12900	16400	19000	21100
		0.375							19900	24000
		0.500								

95 KSI SHEAR FLUSH HEAD BOLTS, SHEAR FLUSH AND PROTRUDING HEAD LOCKBOLTS AND HEX-DRIVE BOLTS IN:

CLAD OR BARE 7075-T6 SHEET OR PLATE

TABLE II

Strengths of Shear Flush Head Bolts, Shear Flush and Protruding Head Lockbolts and Hex-Drive Bolts
Figure 5 (Sheet 2)

FASTENER PART NUMBERS			BACB30EL BACB30FB BACB30FM BACB30FN BACB30GW BACB30GY BACB30LL		BACB30MY BACB30NU BACB30NW NAS1436-1442 NAS1446-1452					
FASTENER DIAMETER			3/16	1/4	5/16	3/8	7/16	1/2	9/16	5/8
SINGLE SHEAR (LBS)			2690	4650	7250	10400	14200	18600	23600	29150
SINGLE SHEAR BEARING STRENGTH (LBS)	MATERIAL GAGE	0.063	1380	1840	2300					
		0.071	1560	2080	2600	3110				
		0.080	1750	2340	2920	3510	4090			
		0.090	1970	2630	3290	3940	4610	5250		
		0.100	2190	2920	3660	4390	5100	5850	6600	
		0.125	2690	3660	4570	5500	6400	7300	8250	9150
		0.140		4090	5100	6150	7150	8200	9200	10200
		0.160		4650	5850	7000	8200	9350	10500	11700
		0.180			6500	7900	9200	10500	11800	13200
		0.190				8350	9700	11100	12500	13900
		0.200				8750	10200	11700	13200	14600
		0.224				8900	11500	13100	14700	16400
		0.250					12800	14600	16400	18300
		0.312					12900	16400	19900	22900
		0.375								24000
		0.500								

95 KSI SHEAR FLUSH HEAD BOLTS, SHEAR FLUSH AND PROTRUDING HEAD LOCKBOLTS AND HEX-DRIVE BOLTS IN:

CLAD OR BARE 7178-T6 SHEET OR PLATE

TABLE III

Strengths of Shear Flush Head Bolts, Shear Flush and Protruding Head Lockbolts and Hex-Drive Bolts

Figure 5 (Sheet 3)

FASTENER PART NUMBER			BACB30KD (ALLOY STEEL)					
FASTENER DIAMETER			3/16	1/4	5/16	3/8	7/16	1/2
SINGLE SHEAR (LBS)			3050	5300	8250	11900	16200	21200
SINGLE SHEAR BEARING STRENGTH (LBS)	MATERIAL GAGE	0.100	2430					
		0.112	2570					
		0.125	2910	3740	4440			
		0.140	3050	4200	5150			
		0.160		4830	6000	7000	8000	
		0.180		5100	6700	8000	9100	
		0.190		5250	7000	8500	9750	10900
		0.200		5300	7200	8850	10400	11600
		0.224			7300	10000	11700	13200
		0.250			8150	11100	13200	14900
		0.312			8250	11600	15300	19000
		0.375				11900	15800	20100
		0.437					16200	20900
		0.500						21200

108 KSI SHEAR FLUSH HEAD TAPER SHANK BOLT IN CLAD OR BARE 7075-T6 SHEET OR PLATE

TABLE I

Strengths of Shear Flush Head Taper Shank Bolts
Figure 6

FASTENER PART NUMBER			BACB30PT		
FASTENER DIAMETER			1/4	5/16	3/8
SINGLE SHEAR (LBS)			4800	7450	10700
SINGLE SHEAR BEARING STRENGTH (LBS)	MATERIAL GAGE	0.071	1970		
		0.080	2270		
		0.090	2580	3120	
		0.100	2870	3530	4100
		0.125	3280	4460	5250
		0.140	3530	4760	6000
		0.160	3870	5150	6650
		0.190	4360	5850	7400
		0.200	4530	6000	7600
		0.224	4800	6500	8200
		0.250		7050	8900
		0.312		7450	10400
		0.375			10700

95 KSI 70° HEAD RADIUS LEAD-IN BOLT IN CLAD OR BARE 7075-T6 SHEET OR PLATE

TABLE I

Strengths of 70° Head Radius Lead-In Bolts
Figure 7

SUBSTITUTE RIVET	RIVETED MATERIAL	RIVET DIAMETER: INITIAL MS20470D OR BACR15BB-D	RIVET DIAMETER: SUBSTITUTE RIVET	RIVETED MATERIAL GAGE .025	.028	.032	.036	.040	.045	.050	.056	.063	.071	.080	.090	.100	.112	.125
				QUANTITY FACTOR [C]														
NAS1398D BLIND PROTRUDING HEAD RIVET [A] [B] [D]	CLAD OR BARE 2024-T3 2024-T4 ALUMINUM ALLOY	1/8	1/8	1.5	1.5	1.5	1.5	1.5	1.4	1.3	1.2	1.1	1.1	1.0				
			5/32	1.3	1.3	1.2	1.2	1.2	1.1	1.0	0.9	0.9	0.8	0.8	0.7	0.7		
		5/32	5/32	1.6	1.6	1.5	1.5	1.5	1.5	1.5	1.4	1.3	1.2	1.2	1.1			
			3/16	1.5	1.5	1.4	1.4	1.3	1.2	1.2	1.1	1.0	1.0	0.9	0.8	0.8		
		3/16	3/16	1.8	1.8	1.6	1.6	1.5	1.5	1.5	1.6	1.5	1.4	1.3	1.2	1.1	1.1	1.0
			1/4			1.4	1.4	1.3	1.3	1.2	1.1	1.0	1.0	0.9	0.8	0.8	0.7	0.7
		1/4	1/4			1.8	1.8	1.7	1.7	1.5	1.6	1.6	1.6	1.5	1.4	1.3	1.3	1.2
	CLAD OR BARE 7075-T6 ALUMINUM ALLOY	1/8	1/8	1.8	1.8	1.7	1.5	1.5	1.4	1.3	1.2	1.1	1.1	1.0				
			5/32	1.6	1.6	1.4	1.4	1.2	1.1	1.0	0.9	0.9	0.8	0.8	0.7	0.7		
		5/32	5/32	2.0	2.0	1.8	1.8	1.7	1.5	1.5	1.4	1.3	1.2	1.2	1.1			
			3/16	1.9	1.9	1.7	1.6	1.4	1.4	1.2	1.1	1.0	1.0	0.9	0.8	0.8		
		3/16	3/16	2.2	2.2	2.0	2.0	1.8	1.8	1.7	1.6	1.5	1.4	1.3	1.2	1.1	1.1	1.0
			1/4			1.7	1.7	1.5	1.4	1.3	1.1	1.0	1.0	0.9	0.8	0.8	0.7	0.7
		1/4	1/4			2.2	2.2	2.0	2.0	1.8	1.8	1.7	1.6	1.5	1.4	1.3	1.3	1.2
BACR15BB()AD() OR MS20470AD PROTRUDING HEAD RIVETS	CLAD OR BARE 2024-T3 2024-T4 ALUMINUM ALLOY	1/8	1/8	1.0	1.0	1.2	1.3	1.3	1.3	1.3	1.3	1.3	1.3	1.3				
			5/32	0.8	0.8	0.8	0.8	0.9	0.9	0.9	0.9	0.9	0.9	0.9				
		5/32	5/32	1.0	1.0	1.0	1.0	1.2	1.2	1.3	1.3	1.3	1.3	1.3				
			3/16	0.9	0.9	0.9	0.9	0.9	0.9	0.9	0.9	0.9	0.9	0.9				
		3/16	3/16	1.0	1.0	1.0	1.0	1.0	1.0	1.2	1.3	1.3	1.3	1.3				
			1/4							0.8	0.8	0.8	0.8	0.8				
		1/4	1/4							1.0	1.1	1.2	1.3	1.3	1.3			
			5/16									0.8	0.9	0.9	0.9			
	CLAD OR BARE 7075-T6 ALUMINUM ALLOY	1/8	1/8	1.2	1.2	1.3	1.3	1.3	1.3	1.3	1.3	1.3	1.3	1.3				
			5/32	0.8	0.8	0.9	0.9	0.9	0.9	0.9	0.9	0.9	0.9	0.9				
		5/32	5/32	1.0	1.0	1.2	1.2	1.3	1.3	1.3	1.3	1.3	1.3	1.3				
			3/16	0.9	0.9	0.9	0.9	1.0	0.9	0.9	0.9	0.9	0.9	0.9				
		3/16	3/16	1.0	1.0	1.0	1.0	1.2	1.2	1.3	1.3	1.3	1.3	1.3	1.3	1.3		
			1/4							0.8	0.8	0.8	0.8	0.8	0.8	0.8		
		1/4	1/4							1.1	1.2	1.3	1.3	1.3	1.3	1.3		
			5/16									0.9	0.9	0.9	0.9	0.9		

Fastener Substitution for MS20470D and BACR15BB()D Universal Head Rivets
Figure 8 (Sheet 1)

BOEING PROPRIETARY - Copyright © - Unpublished Work - See title page for details.

SUBSTITUTE RIVET	RIVETED MATERIAL	RIVET DIAMETER: INITIAL MS20470D OR BACR15BB-D	RIVET DIAMETER: SUBSTITUTE RIVET	RIVETED MATERIAL GAGE: .025	.028	.032	.036	.040	.045	.050	.056	.063	.071	.080	.090	.100	.112	.125
				QUANTITY FACTOR [C]														
NAS1738E BLIND PROTRUDING HEAD RIVET [A] [B] [D] [E]	CLAD OR BARE 2024-T3 2024-T4 ALUMINUM ALLOY	1/8	1/8			1.7	1.7	1.5	1.4	1.2	1.1	1.0	0.9	0.9	0.8			
			5/32			1.3	1.4	1.2	1.1	1.0	0.9	0.8	0.7	0.7	0.6	0.6	0.5	
		5/32	5/32			1.7	1.7	1.7	1.7	1.5	1.4	1.2	1.1	1.0	0.9	0.9	0.8	
			3/16			1.5	1.4	1.4	1.5	1.3	1.2	1.1	1.0	0.8	0.8	0.7	0.7	0.6
		3/16	3/16				1.7	1.7	1.7	1.7	1.7	1.5	1.3	1.2	1.1	1.0	0.9	0.9
	CLAD OR BARE 7075-T6 ALUMINUM ALLOY	1/8	1/8			1.4	1.3	1.3	1.2	1.1	1.1	1.0	0.9	0.8	0.8			
			5/32			1.0	1.0	1.0	0.9	0.9	0.8	0.8	0.7	0.7	0.6	0.6	0.5	
		5/32	5/32			1.2	1.3	1.4	1.4	1.3	1.2	1.1	1.1	1.0	0.9	0.9	0.8	
			3/16			1.0	1.0	1.1	1.1	1.1	1.0	0.9	0.9	0.8	0.8	0.7	0.7	0.6
		3/16	3/16				1.2	1.3	1.4	1.5	1.4	1.3	1.2	1.2	1.1	1.0	0.9	0.9

NOTES

- THIS FASTENER SUBSTITUTION TABLE IS NOT APPLICABLE TO THE STRUCTURAL AREAS ON THE AIRPLANE THAT ARE SPECIFIED IN PARAGRAPH 1.C.
- REFER TO SRM 51-30-5 FOR THE CORRECT FASTENER HOLE SIZES.

[A] MULTIPLY THE QUANTITY FACTORS BY 1.5 FOR BLIND RIVETS THAT ARE SUBSTITUTED ON ALL FASTENED JOINTS IN PRIMARY STRUCTURE, AND FASTENED JOINTS THAT ARE SUBJECT TO ALTERNATING LOADS.

[B] KEEP THE QUANTITY OF BLIND RIVETS TO A MINIMUM WHEN YOU USE THEM TO REPLACE SOME OF THE SOLID RIVETS IN A GIVEN JOINT. THIS WILL MAKE SURE THAT OVER-STRESSING OF THE REMAINING SOLID RIVETS WILL NOT OCCUR.

[C] ONLY USE THESE QUANTITY FACTORS FOR RIVETS THAT ARE IN SINGLE SHEAR LOADING APPLICATIONS.

[D] YOU CAN SUBSTITUTE NAS1738E RIVETS FOR NAS1398D RIVETS, BUT ONLY IF THE SHEET THICKNESS ON THE OPPOSITE SIDE IS LESS THAN 1/4 OF THE HOLE DIAMETER. MAKE SURE THAT THE ACCESSIBILITY OF THE RIVETING TOOL IS ADEQUATE ALSO.

[E] INSTALL NAS1738 RIVETS IN A LARGER SIZE HOLE THAN THE INITIAL FASTENER HOLE SIZE. USE THE TABLE THAT FOLLOWS FOR THE CORRECT HOLE SIZES TO INSTALL NAS1738 RIVETS.

RIVET NOMINAL DIAMETER	MINIMUM HOLE DIAMETER	MAXIMUM HOLE DIAMETER
1/8	0.143	0.146
5/32	0.176	0.180
3/16	0.205	0.209

Fastener Substitution for MS20470D and BACR15BB()D Universal Head Rivets
Figure 8 (Sheet 2)

BOEING PROPRIETARY - Copyright © - Unpublished Work - See title page for details.

SUBSTITUTE RIVET	RIVETED MATERIAL	RIVET DIAMETER: INITIAL MS20426D OR BACR15BA-D	RIVET DIAMETER: SUBSTITUTE RIVET	RIVETED MATERIAL GAGE: .040	.045	.050	.056	.063	.071	.080	.090	.100	.112	.125	.140	.160	.180
				QUANTITY FACTOR [C]													
NAS1399D BLIND RIVET IN COUNTER-SUNK HOLES [A] [B] [D]	CLAD OR BARE 2024-T3 2024-T4 7075-T6 ALUMINUM ALLOY	5/32	5/32		3.5	3.3	2.8	2.6	2.4	2.0	1.6	1.4	1.2	1.0			
			3/16				2.4	2.0	1.8	1.5	1.3	1.1	0.9	0.8	0.7		
		3/16	3/16				2.9	2.5	2.2	2.0	1.8	1.6	1.3	1.1	1.0		
			1/4						2.1	1.9	1.7	1.4	1.2	1.0	0.8	0.7	
		1/4	1/4						2.7	2.4	2.1	2.1	1.9	1.7	1.4	1.2	1.2
BACR15BA()AD OR MS20426AD RIVETS IN COUNTERSUNK HOLES	CLAD OR BARE 2024-T3 2024-T4 7075-T6 ALUMINUM ALLOY	5/32	5/32	1.1	1.1	1.1	1.2	1.2	1.3	1.3	1.3						
			3/16	1.0	0.9	0.9	0.9	0.9	1.0	1.0	1.0	0.9	0.9				
		3/16	3/16			1.1	1.1	1.1	1.2	1.3	1.3	1.3	1.3				
NAS1739E BLIND RIVETS IN COUNTER-SUNK HOLES [A] [B] [D] [E]	CLAD OR BARE 2024-T3 2024-T4 7075-T6 ALUMINUM ALLOY	5/32	5/32	1.4	1.3	1.4	1.3	1.2	1.3	1.2	1.1	1.0	0.9	0.8	0.8		
			3/16	1.2	1.2	1.2	1.1	1.1	1.1	1.0	0.9	0.8	0.8	0.7	0.7	0.6	
		3/16	3/16			1.4	1.4	1.4	1.3	1.3	1.3	1.2	1.1	1.0	0.9	0.9	

Fastener Substitution for MS20426D and BACR15BA()D Rivets in Countersunk Holes
Figure 9

NOTES

- THIS FASTENER SUBSTITUTION TABLE IS NOT APPLICABLE TO THE STRUCTURAL AREAS ON THE AIRPLANE THAT ARE SPECIFIED IN PARAGRAPH 1.C.
- REFER TO SRM 51-30-5 FOR THE CORRECT FASTENER HOLE SIZES.

[A] MULTIPLY THE QUANTITY FACTORS BY 1.5 FOR BLIND RIVETS THAT ARE SUBSTITUTED ON ALL FASTENED JOINTS IN PRIMARY STRUCTURE, AND FASTENED JOINTS THAT ARE SUBJECT TO ALTERNATING LOADS.

[B] KEEP THE QUANTITY OF BLIND RIVETS TO A MINIMUM WHEN YOU USE THEM TO REPLACE SOME OF THE SOLID RIVETS IN A GIVEN JOINT. THIS WILL MAKE SURE THAT OVER-STRESSING OF THE REMAINING SOLID RIVETS WILL NOT OCCUR.

[C] ONLY USE THESE QUANTITY FACTORS FOR RIVETS THAT ARE IN SINGLE SHEAR LOADING APPLICATIONS.

[D] YOU CAN SUBSTITUTE NAS1738E RIVETS FOR NAS1398D RIVETS, BUT ONLY IF THE SHEET THICKNESS ON THE OPPOSITE SIDE IS LESS THAN 1/4 OF THE HOLE DIAMETER. MAKE SURE THAT THE ACCESSIBILITY OF THE RIVETING TOOL IS ADEQUATE ALSO.

[E] INSTALL NAS1738 RIVETS IN A LARGER SIZE HOLE THAN THE INITIAL FASTENER HOLE SIZE. USE THE TABLE THAT FOLLOWS FOR THE CORRECT HOLE SIZES TO INSTALL NAS1738 RIVETS.

RIVET NOMINAL DIAMETER	MINIMUM HOLE DIAMETER	MAXIMUM HOLE DIAMETER
1/8	0.143	0.146
5/32	0.176	0.180
3/16	0.205	0.209

BOEING PROPRIETARY - Copyright © - Unpublished Work - See title page for details.

REPAIRS - GENERAL

1. General

   A. This section contains typical repairs. These repairs are for general application and will be found referenced in other chapters of this manual. Because of the unspecific nature of the repairs, illustrations usually only depict the actual component which has been damaged. Attaching parts may preclude the use of the typical repair and necessitate the use of a specially designed repair or replacement of the part.

   B. Before using the typical repairs in this section, it should be ascertained that no specific repairs are available in the chapter applicable to the component. Repairs contained in other chapters are designed specifically for those components and are preferred to the typical repairs of this section.

2. Partial Repairs

   A. In some cases it is more practical to use an existing splice where it is adjacent to the damaged area. In this case, the typical repair data may be used to provide an additional splice to permit partial replacement of a damaged member.

   B. In some cases, damage to a component may be confined to a small portion of the member, such as one flange of an extruded section. In this instance it is often more practical to clean up the damage to the flange and apply the repair rather than completely remove a section of the damaged member.

3. Multiple Repairs

   A. Where damage is not confined to one structural element, typical repairs may be combined. For example, a web repair and an extrusion repair may both be used to restore a damaged member to a serviceable condition.

4. Fasteners

A. Adhere to the quantities and type of fasteners specified for the typical repair. Fasteners, fastener patterns and quantities have been chosen to provide adequate strength and fatigue life.

B. Where a choice of fasteners is permitted, use similar types to those existing in the vicinity of the repair.

C. When fasteners specified in a repair are not available, refer to 51-30-3 for fastener substitution data. The use of substitute fasteners which result in an increase in quantity or diameter may affect the size of repair parts, therefore, fastener availability should be checked before commencing the repair.

D. Refer to 51-30-5 for hole sizes for the various types of fasteners. Where repairs utilize existing holes in the structure it is frequently necessary to use oversize fasteners. This is particularly true where close tolerance fasteners are replacing rivets.

REPAIR OF MINOR DENTS IN SHEET METAL MATERIALS

1. General

CAUTION: IF A DENT IS LARGER THAN THE ALLOWABLE DAMAGE LIMITS CONTAINED IN THE APPLICABLE CHAPTER OF THIS MANUAL, DO AS FOLLOWS:

- REPAIR THE DENT AS GIVEN IN THE APPLICABLE REPAIR CHAPTER OF THIS MANUAL OR CONTACT THE BOEING COMPANY.
- IF THE DENT CANNOT BE REPAIRED IMMEDIATELY, EXAMINE IT EACH 1000 FLIGHT CYCLES AND REPAIR IT BY THE SUBSEQUENT 'C' CHECK.

A. This subject covers repairs to dents in the external surface of the airplane. Dents may cause a reduction in performance or have an adverse affect on stalling speeds, handling characteristics, or produce buffeting.

NOTE: Damage, such as blendouts, trimouts, or dents:

- That occur to a Structurally Significant Item (SSI) given in SRM 51-00-4, Fig 3 and,
- That are within the allowable damage limits of the Boeing SRM,

do not have an effect on the damage tolerance properties of the SSI. Therefore, existing Supplemental Structural Inspection Document (SSID) inspection programs remain effective.

B Refer to 51-70 for details of aerodynamic smoothness requirements

C. Refer to 51-40-6 for dents in aluminum honeycomb structure.

2. Reworking Dents

CAUTION: DO NOT REWORK DENTS IN 7000-SERIES ALUMINUM ALLOYS GREATER THAN 0.063 THICK, 2000-SERIES ALUMINUM ALLOYS GREATER THAN 0.063 THICK, 7178 ALUMINUM ALLOYS (ALL THICKNESSES), OR TITANIUM (ALL THICKNESSES) BY METAL FORMING METHODS DUE TO POTENTIAL CRACKING DURING THE REWORK PROCEDURE.

DO NOT USE METAL FORMING PROCEDURES OTHER THAN THE PROCEDURE WHICH USES THE ELECTROMAGNETIC DENT PULLER TO REWORK DENTS IN ALUMINUM FACESHEET/ALUMINUM HONEYCOMB SANDWICH PANELS. IF YOU DO NOT OBEY, DAMAGE TO THE STRUCTURAL BOND BETWEEN THE FACESHEET AND THE CORE (THAT IS MORE THAN THE ALLOWABLE DAMAGE LIMITS) CAN OCCUR.

A. Inspection

(1) Prior to any rework, use a suitable nondestructive test procedure to ensure no cracks or delamination exist in dent or local area.

(2) After rework using metal forming methods, use a suitable nondestructive test procedure to ensure no cracks exist in rework area.

B. Rework

(1) Dents in materials that cannot be put back to their initial contour may be filled as given in par. 3.

BOEING PROPRIETARY - Copyright © - Unpublished Work - See title page for details.

(2) Dents in aluminum sheet metal and aluminum honeycomb sandwich panels can be reworked using an electric dent puller. The steps that follow apply when using an electric dent puller.

WARNING: DO NOT USE AN ELECTRIC DENT PULLER WITHOUT A MYLAR SHEET. THE SHEET IS AN INSULATOR BETWEEN THE COIL AND THE PART. THE OPERATOR CAN GET AN ELECTRIC SHOCK IF THE MYLAR IS NOT USED.

(a) A 0.003 to 0.0075 inch thick mylar cover sheet must be used to protect the part and the operator. Use a mylar cover sheet that has a larger diameter than the dent. The sheet must also be larger in diameter than the coil on the dent puller. Make sure that the mylar is not damaged.

CAUTION: MAKE SURE THAT THE TAPE THAT YOU USE ON THE MYLAR DOES NOT OVERLAP THE AREA TO BE TOUCHED BY THE COIL. IF THE DENT PULLER COIL TOUCHES THE TAPE, THE SHAPE OF THE TAPE WILL SHOW ON THE SHEET METAL SURFACE.

(b) Tape the mylar to the damaged part. Make sure that the tape does not overlap the area that the coil will touch.

NOTE: The Boeing Company uses an electric dent puller that is sold by:

Electroimpact, Inc.
4606 107th St. S.W.
Mukilteo, WA 98275, USA
Phone: 425-348-8090
Internet: http://www.electroimpact.com

If you use this dent puller, it is recommended that you get instructions from Boeing. Ask Boeing for document D6-38394, "Electromagnetic Dent Remover".

3. Filling Dents

A. Dents can be filled to the initial contour of the component if:
- The applicable allowable damage section of this manual does not prevent the procedure
- A dent is not larger than allowable damage limits contained in the applicable chapter of this manual.
- A dent is on a control surface such as ailerons, spoilers, trailing edge flaps and slats, elevators, and rudder that are up to 1.5 times larger than the allowable damage limits.
- There is no damage such as cracks, penetrations, or delaminations at the location of the dent.

Dents that are filled can be sealed with speed tape. Refer to par. 3.E.

B. Materials listed in Fig. 1 are suitable for filling dents. The work life and curing times are also given in Fig. 1.

BOEING PROPRIETARY - Copyright © - Unpublished Work - See title page for details.

WARNING: THESE CHEMICALS CONTAIN TOXIC INGREDIENTS. PROVIDE ADEQUATE VENTILATION AND PROTECT SKIN AND EYES FROM CONTACT WITH UNCURED RESINS. WEAR RUBBER GLOVES OVER COTTON GLOVES FOR PROTECTION OF HANDS. IF SKIN IS EXPOSED TO DIRECT CONTACT WITH UNCURED RESINS, WASH WITH WARM WATER AND SOAP. AVOID THE USE OF SOLVENTS FOR CLEANING SKIN.

C. Fairing Material Preparation and Surface Preparation

(1) Mix fairing compounds in accordance with manufacturer's instructions.

(2) Store fairing compounds in accordance with manufacturer's instructions.

(3) Wipe off excess oil and grease.

(4) Remove the paint from the dented area and a minimum 1/2 inch all around.

(5) Apply MEK (methyl ethyl ketone) from safety cans or squeeze bottles with clean cloths.

(6) Scrub surface with a clean fiber brush or rag, if necessary, to loosen soils.

(7) Wipe off solvent before it has dried, using more clean cloths.

(8) Repeat application of clean solvent as necessary to remove all soil. Iridescent metal surfaces are evidence of improper cleaning and shall be recleaned.

D. Fairing Material Application

(1) Apply the fairing compound with a spatula or an extrusion gun to the uneven surfaces, gaps, and voids of airplane structures, fair to the desired contour and smoothness by one or a combination of the following methods. Exercise care to avoid air entrapment and the formulation of surface air bubbles during application of fairing compound.

(a) Fairing by Means of Molding Tools:

1) Specific molding tools may be used in accordance with applicable drawing requirements. Apply mold faceplates immediately after application of fairing compound.

(b) Fairing by Means of Direct Sweeping:

1) Fair immediately after application by direct sweeping with a suitable nonmetal tool. This method applies only to regular narrow gaps and regular offset butt joints. Use masking tape to restrict fairing compound to the desired areas.

(c) Fairing After Cure by Sanding:

1) Mask around the fairing area with a plastic-back tape before application of fairing compound, or after cure, to protect the aluminum from damage by sanding.

2) Immediately after application, remove excess fairing compound. Leave only a small amount above the desired fairing surface.

3) Cure fairing compound to sandable state.

4) Sand fairing compound to desired dimension and smoothness. Eighty grit sandpaper may be used for initial sanding and 240 grit or finer for the final smoothing.

   NOTE: Use only aluminum-oxide sandpaper.

5) Remove tape after sanding has been finished.

   NOTE: Operators wishing to continue these repaired surfaces in service must establish an inspection program.

E. Application of Speedtape (Optional):

(1) Apply a chordwise overlay of Y434 speedtape (Fig. 1) after application of fairing material.

(2) Extend the speedtape beyond the dented area so that the ends terminate under seals where possible (Fig. 2).

MATERIAL	WORK LIFE	CURE TIME AT ROOM TEMPERATURE	SUPPLIER
FAIRING COMPOUND: SNOWITE #3303	3 TO 8 MINUTES	10 TO 30 MINUTES	A
BMS 5-28, TYPE 3 D	20 MINUTES	16 HOURS	B
BMS 5-28, TYPE 16 E	20 MINUTES	16 HOURS	B
BMS 5-123, TYPE I, CLASS 3	3 TO 4 MINUTES	10 TO 20 MINUTES	B
DITZLER DF-700 DF-705	3 TO 8 MINUTES	10 TO 30 MINUTES	F
EPIBOND 1526A/B	7 TO 10 MINUTES	110 MINUTES	B
SPEEDTAPE: Y434	- -	- -	C

TABLE I

NOTES

A COMPOSITITE
265 S. WEST ST.
LEBANON, OHIO 45036

B FURANE PRODUCTS COMPANY
5121 SAN FERNANDO RD. W.
LOS ANGELES, CALIFORNIA 90039

C STRUCTURAL PRODUCTS
3M CORPORATION
CENTER STREET
ST.PAUL, MINNESOTA 55101

D SLUMPING COMPOUND

E NONSLUMPING COMPOUND

F PPG INDUSTRIES CORPORATION
P.O. BOX 3510
TROY, MICHIGAN 48084

Dent Repair Materials
Figure 1

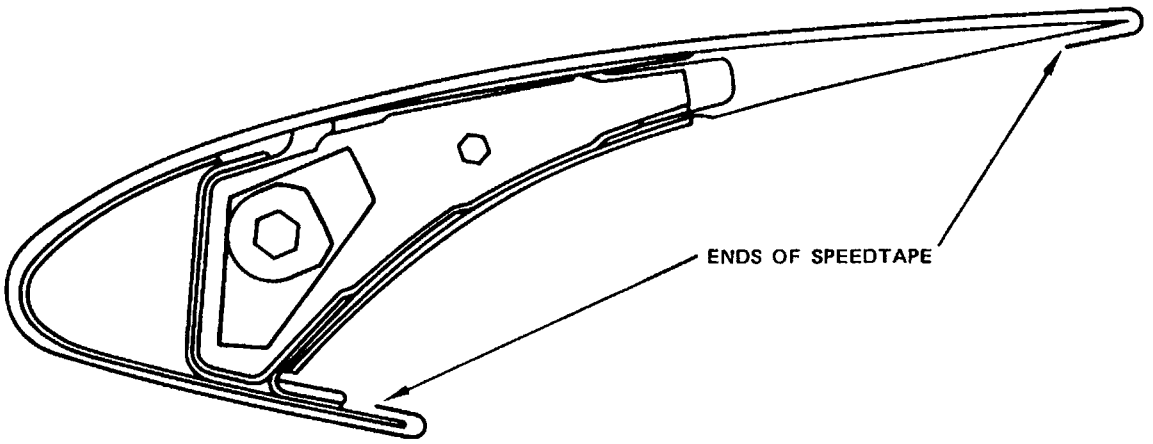

NOTES

- LOOSEN LEADING EDGE AND/OR TRAILING EDGE SEALS AS REQUIRED TO ALLOW TAPE TO WRAP AROUND THE EDGES, UNDER THE SEALS. RE–TIGHTEN SEALS.

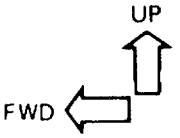

Speedtape Application
Figure 2

NOTES

- REFER TO SRM 51-00-4, FIG. 3 TO DECIDE IF THIS REPAIR WILL HAVE AN EFFECT ON A STRUCTURALLY SIGNIFICANT ITEM (SSI). IF IT DOES HAVE AN EFFECT ON AN SSI, DO A DAMAGE TOLERANCE ANALYSIS OR CONTACT BOEING.
- REPAIRS ARE NOT APPLICABLE TO WING SPAR WEBS, BEADED PRESSURE WEBS, WEBS AT BODY STATIONS 178, 540, 664, 727, 1016, 1088, 1156 BULKHEAD OR VERTICAL AND HORIZONTAL STABILIZERS.
- DO NOT INSTALL STEEL PARTS OR STEEL FASTENERS WITHIN 3.0 FEET OF THE FLUX GATE COMPASS. REFER TO AMM 34-21-0 FOR FLUX GATE COMPASS LOCATIONS AND REQUIREMENTS.
- REFER TO SRM 51-10-2 FOR PROTECTIVE TREATMENT OF METAL.
- REFER TO AMM 51-21-0 FOR INTERIOR AND EXTERIOR FINISH.
- REFER TO SRM 51-30 FOR FASTENER CODE, REMOVAL AND INSTALLATION, HOLE SIZES AND EDGE MARGINS.
- BREAK SHARP EDGES OR ORIGINAL AND REPAIR PARTS 0.015 TO 0.030 INCH.
- ASSEMBLE REPAIR PARTS WITH FAY SURFACE SEALANT. INSTALL FASTENERS WET WITH SEALANT AND FILLET SEAL NUT, COLLAR, OR UPSET END OF RIVETS. USE BMS 5-95 SEALANT IN APPLICATIONS BELOW 160°F (71°C), BMS 5-26 SEALANT IN FUEL TANK AREAS AND AREAS BELOW 250°F (121°C), AND DOW CORNING 93-006 SEALANT WHERE THE TEMPERATURE EXCEEDS 250°F (121°C).
- REFER TO SRM 51-80 FOR BALANCING REQUIREMENTS WHEN THE REPAIR INVOLVES CONTROL SURFACES.

[A] REFER TO TABLE II FOR ROWS OF RIVETS REQUIRED AND RIVET SPACING.

[B] WHEN INITIAL MATERIAL IS 7075-T6, USE CLAD 7075-T6 IN NEXT THICKER GAGE.

WHEN INITIAL MATERIAL IS 2024-T3, USE CLAD 2024-T3 IN NEXT THICKER GAGE.

WHEN DAMAGE OCCURS IN THE INITIAL WEB SPLICE, USE NEXT THICKER GAGE.

FOR BONDED 2-PLY WEBS OF 0.024 INCH TOTAL GAGE OR LESS, USE 0.032 INCH GAGE OF THE SAME MATERIAL.

[C] USE WHEN INITIAL WEB IS 0.071 INCH AND GREATER.

[D] FOR THICKNESS GREATER THAN THAT SHOWN IN TABLE I, ATTACH FILLER [2] TO [3] WITH AN INDEPENDENT ROW OF FASTENERS.

FASTENER SYMBOLS

+ INITIAL FASTENER LOCATIONS

⊕ REPAIR FASTENER LOCATIONS

REPAIR MATERIAL			
PART		QTY	MATERIAL
[1]	PLATE	1	SAME AS INITIAL [B]
[2]	FILLER	2	SAME AS INITIAL [C]
[3]	PLATE	1	SAME AS INITIAL [B]

FASTENER	MAXIMUM GAGE OF PART [2] WITHOUT INDEPENDENT ATTACHMENT (INCHES)
MS20470D4	0.025
MS20470D5	0.032
BACB30FM5	0.040
MS20470D6	0.036
BACB30FM6	0.045
MS20470D8	0.050
BACB30FM8	0.063
MS20470D10	0.063
BACB30FM10	0.080

Typical Web Repair
Figure 1 (Sheet 1)

BOEING PROPRIETARY - Copyright © - Unpublished Work - See title page for details.

GAGE OF ORIGINAL WEB		RIVETED MATERIAL															
		2024-T3								7075-T6							
		TYPE OF FASTENERS								TYPE OF FASTENERS							
		MS20470D					BACB30FM			MS20470D					BACB30FM		
		1/8	5/32	3/16	1/4	5/16	3/16	1/4	5/16	1/8	5/32	3/16	1/4	5/16	3/16	1/4	5/16
.020	REQ'D ROWS									1	1						
	SPACING MIN									.41	.51						
	SPACING MAX									.59	.74						
.022	REQ'D ROWS									1	1						
	SPACING MIN									.41	.51						
	SPACING MAX									.57	.72						
.025	REQ'D ROWS	1								1	1						
	SPACING MIN	.43								.41	.51						
	SPACING MAX	.58								.56	.70						
.028	REQ'D ROWS	1								1	1						
	SPACING MIN	.43								.41	.51						
	SPACING MAX	.54								.55	.67						
.032	REQ'D ROWS	1	1							1	1	1					
	SPACING MIN	.43	.54							.41	.51	.62					
	SPACING MAX	.53	.66							.53	.66	.80					
.036	REQ'D ROWS	1	1							1	1	1					
	SPACING MIN	.43	.54							.41	.51	.62					
	SPACING MAX	.51	.63							.45	.63	.77					
.040	REQ'D ROWS	1	1	1						2	1	1	1				
	SPACING MIN	.43	.54	.65						.41	.51	.62	.82				
	SPACING MAX	.46	.61	.74						.80	.62	.75	1.00				
.045	REQ'D ROWS	2	1	1						2	1	1	1				
	SPACING MIN	.43	.54	.65						.41	.51	.62	.62				
	SPACING MAX	.80	.60	.72						.68	.52	.72	1.00				
.050	REQ'D ROWS	2	1	1	1					2	2	1	1				
	SPACING MIN	.43	.54	.65	.86					.41	.51	.62	.82				
	SPACING MAX	.70	.55	.70	.94					.58	.92	.66	.89				
.056	REQ'D ROWS	2	2	1	1							2	1		1	1	
	SPACING MIN	.43	.54	.65	.86							.62	.82		.62	.82	
	SPACING MAX	.60	.94	.67	.90							1.14	.89		.67	.90	
.063	REQ'D ROWS	2	2	2	1	1						2	1	1	1	1	
	SPACING MIN	.43	.54	.65	.86	1.07						.62	.82	1.02	.62	.82	
	SPACING MAX	.52	.80	1.15	.88	1.09						.94	.84	1.05	.64	.90	
.071	REQ'D ROWS		2	2	2	1	2					2	2	1	2	1	
	SPACING MIN		.54	.65	.86	1.07	.65					.62	.82	1.02	.62	.82	
	SPACING MAX		.70	1.00	1.70	1.07	1.28					.82	1.48	1.04	1.24	.90	
.080	REQ'D ROWS		2	2	2	2	2	2				2	2	2	2	1	
	SPACING MIN		.54	.65	.86	1.07	.65	.86				.62	.82	1.02	.62	.82	
	SPACING MAX		.60	.86	1.50	2.04	1.22	1.62				.70	1.27	1.02	1.20	.90	
.090	REQ'D ROWS			2	2	2	2	2				2	2	2	2	1	
	SPACING MIN			.65	.86	1.07	.65	.86				.62	.82	1.02	.62	.82	
	SPACING MAX			.72	1.30	1.98	1.18	1.58				.62	1.10	1.70	1.17	.90	
.100	REQ'D ROWS			3	2	2	2	2	2				3	3	2	2	2
	SPACING MIN			.89	1.17	1.47	.89	1.17	1.47				1.34	1.68	1.02	1.34	1.68
	SPACING MAX			1.05	1.25	1.92	1.25	1.68	2.08				1.47	2.30	1.04	1.36	1.82
.112	REQ'D ROWS			3	3	2	2	2	2				3	3	3	2	2
	SPACING MIN			.89	1.17	1.47	.89	1.17	1.47				1.34	1.68	1.02	1.34	1.68
	SPACING MAX			.94	1.67	1.74	1.25	1.67	2.08				1.34	2.05	1.46	1.34	1.82
.125	REQ'D ROWS				3	2	2	2	2					3	3	2	2
	SPACING MIN				1.17	1.47	.89	1.17	1.47					1.68	1.02	1.34	1.68
	SPACING MAX				1.50	1.56	1.22	1.67	2.08					1.84	1.69	1.34	1.70

TABLE II

Typical Web Repair
Figure 1 (Sheet 2 of 3)

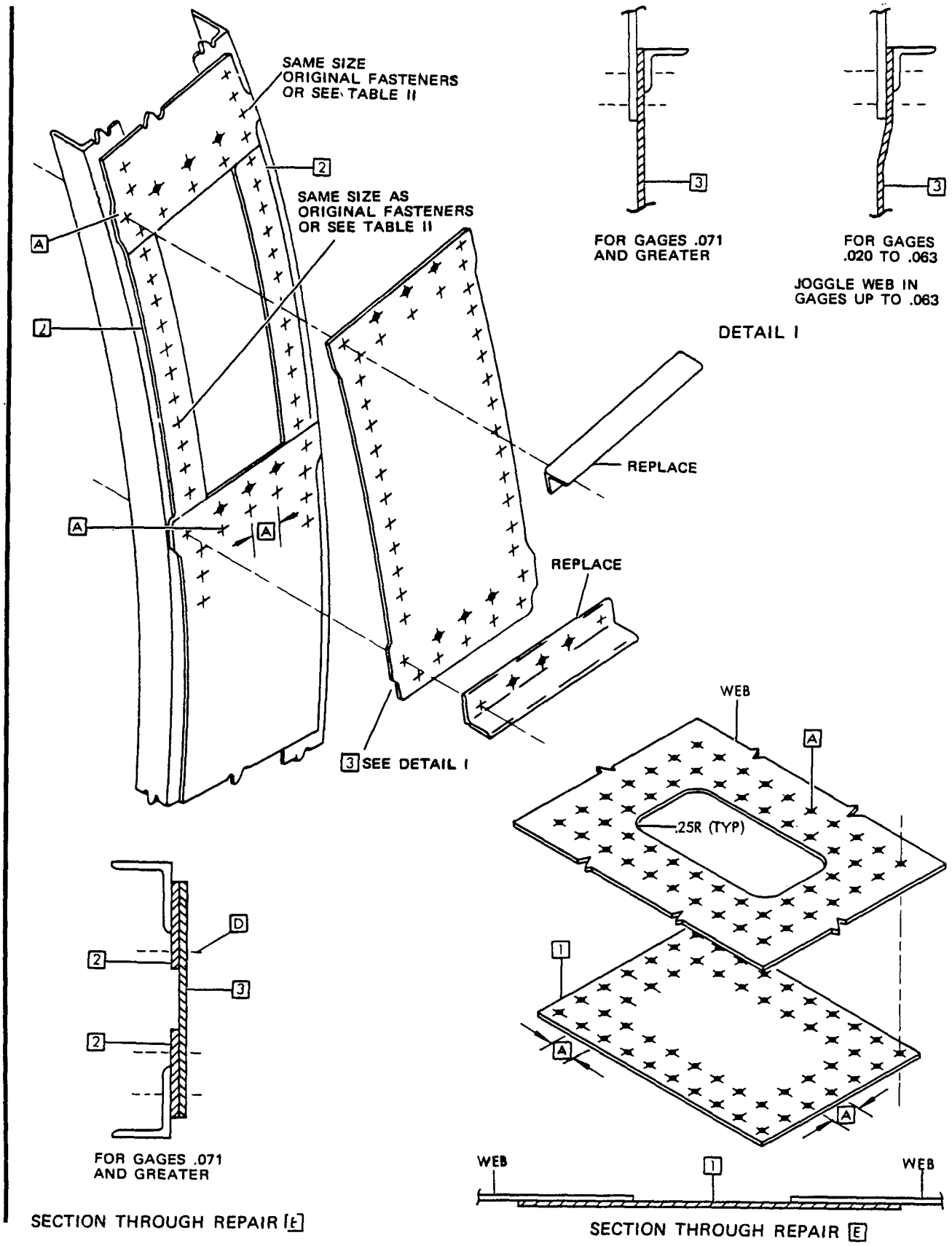

Typical Web Repair
Figure 1 (Sheet 3 of 3)

REPAIR INSTRUCTIONS

1. Cut and remove damaged portion of formed section. Do not cut into any surrounding structure.

   NOTE: If damage portion lies against other material it may be necessary to remove additional fasteners in order to obtain clearance so as not to damage the attached part.

2. Determine from Tables III, IV, and V the number of fasteners and fastener rows required and size the repair parts.
3. Make the repair parts from materials specified in Table I.
4. Assemble the repair parts and drill the fastener holes.
5. Remove the repair parts.
6. Break sharp edges of original parts and repair parts 0.015 R to 0.030 R.
7. Remove all nicks, scratches, burrs, sharp edges and corners from original parts and repair parts.
8. Apply an alodine coating to the repair parts and the cut edges of the original parts per 51-20-01.
9. Apply one coat of BMS 10-11, Type 1 primer to the repair parts and the cut edges of the original parts per 51-21 of the Maintenance Manual.
10. Install repair parts making a faying surface seal with BMS 5-95 sealant according to 51-20-05. Install fasteners wet with BMS 5-95 sealant. [G]
11. Restore original finish per 51-21 of the Maintenance Manual.

NOTES

- REPAIR SECTIONS SHOWN WITH REPAIR ATTACHED TO INSIDE OF SECTION. IF NECESSARY, REPAIR MAY BE ATTACHED TO OUTSIDE OF SECTION
- A PREFERRED REPAIR FOR IMPROVED FATIGUE LIFE IS TO BOND MATING SURFACES OF REPAIR PARTS AND ORIGINAL STRUCTURE PER 51-40-5 PRIOR TO INSTALLATION OF FASTENERS
- DO NOT INSTALL STEEL PARTS OR STEEL FASTENERS WITHIN 3.0 FEET OF THE STANDBY COMPASS. REFER TO 34-24 OF THE MAINTENANCE MANUAL FOR STANDBY COMPASS LOCATION AND REQUIREMENTS
- DO NOT USE THESE TYPICAL REPAIRS ON AFT CARGO DOOR FRAMES AND LOWER AND UPPER CROSS BEAM. REFER TO SB 737-52A1079 FOR THESE REPAIRS
- DO NOT USE THESE TYPICAL REPAIRS FOR FORWARD CARGO DOOR LOWER CORNER FRAMES AND LOWER CROSS BEAM. REFER TO SB 737-52A1100 FOR THESE REPAIRS
- REFER TO THE FOLLOWING WHEN USING THIS REPAIR:

  51-10-1 FOR INVESTIGATION AND CLEANUP OF DAMAGE

  51-10-2 FOR PROTECTIVE TREATMENT OF METAL

  51-20-4 FOR SEALING OF REPAIRS

  51-21 OF THE MAINTENANCE MANUAL FOR INTERIOR AND EXTERIOR FINISHES

  51-30 FOR FASTENER CODE, REMOVAL, INSTALLATION, HOLE SIZES AND EDGE MARGINS

  51-31 OF THE MAINTENANCE MANUAL FOR SEALS AND SEALING

[A] EACH SEVERED FLANGE MUST BE REPLACED. USE SAME GAGE AS ORIGINAL IF REPAIR IS APPLIED TO OUTSIDE OF SECTION. WHEN REPAIR IS APPLIED TO INSIDE OF SECTION, USE ONE GAGE HEAVIER IF THE FLANGE WIDTH IS EQUAL TO OR GREATER THAN W IN TABLE II AND USE TWO GAGES HEAVIER IF THE FLANGE WIDTH IS LESS THAN W IN TABLE II

[B] USE ORIGINAL FASTENER LOCATIONS WHERE FLANGES WERE ATTACHED, OTHERWISE USE SPACING IN TABLE III

[C] SEE FASTENER SPACING IN TABLE III. FOR NUMBER OF FASTENERS SEE TABLE IV OR V. DO NOT USE LESS THAN THREE FASTENERS IN A ROW

[D] WHERE FLANGES ARE ATTACHED, INSTALL FILLER. USE ORIGINAL FASTENER LOCATIONS

[E] REPAIR IS FOR DAMAGE REQUIRING REMOVAL OF LESS THAN 50 PERCENT OF THE CROSS SECTIONAL AREA. FOR GREATER DAMAGE SEE DETAIL II

[F] THE OUTSIDE RADIUS OF REPAIR PART MUST BE GREATER THAN THE INSIDE RADIUS OF EXISTING SECTION

[G] WHEN REPAIRING STRUCTURE SUBJECTED TO ELEVATED TEMPERATURES, USE BMS 5-95 SEALANT IN APPLICATIONS BELOW 160°F (71°C), BMS 5-26 SEALANT IN FUEL TANK AREAS AND AREAS BELOW 250°F (121°C), AND DOW CORNING 93-006 SEALANT WHERE THE TEMPERATURE EXCEEDS 250°F (121°C)

FASTENER SYMBOLS

+ ORIGINAL FASTENER LOCATION

✚ REPAIR FASTENER LOCATION

Typical Formed Section Repair
Figure 1 (Sheet 1)

BOEING PROPRIETARY - Copyright © - Unpublished Work - See title page for details.

REPAIR MATERIAL			
PART		QTY	MATERIAL
1	ANGLE	1	SAME MATERIAL AS ORIGINAL [A]
2	ANGLE	1	SAME MATERIAL AS ORIGINAL [A]
3	ANGLE	1	SAME MATERIAL AS ORIGINAL [A]
4	CHANNEL	1	SAME MATERIAL AS ORIGINAL [A]
5	CHANNEL	1	SAME MATERIAL AS ORIGINAL [A]
6	FILLER	AS REQD	SAME MATERIAL AND GAGE AS ORIGINAL [D]

TABLE I

ORIGINAL MATERIAL GAGE	W (FLANGE WIDTH)
0.025	0.30
0.028	0.30
0.032	0.35
0.036	0.45
0.040	0.45
0.045	0.55
0.050	0.65
0.056	0.65
0.063	0.70
0.071	0.85
0.080	0.95
0.090	1.15
0.100	1.25
0.112	1.30
0.125	1.60
0.140	1.65

TABLE II

FASTENER SPACING												
SHEET GAGE	5/32			3/16			1/4			5/16		
	PER [B]		PER [C]	PER [B]		PER [C]	PER [B]		PER [C]	PER [B]		PER [C]
	MIN	MAX	MIN	MIN	MAX	MIN	MIN	MAX	MIN	MIN	MAX	MIN
0.040	0.55	0.65	0.93	0.65	0.75	1.12						
0.045	0.55	0.75	0.93	0.65	0.75	1.12						
0.050	0.55	0.85	0.93	0.65	0.85	1.12						
0.056	0.55	0.95	0.93	0.65	0.95	1.12						
0.063	0.55	1.05	0.93	0.65	1.05	1.12	0.88	1.05	1.50			
0.071	0.55	1.20	0.93	0.65	1.20	1.12	0.88	1.20	1.50			
0.080	0.55	1.35	0.93	0.65	1.35	1.12	0.88	1.35	1.50	1.10	1.35	1.87
0.090				0.65	1.50	1.12	0.88	1.50	1.50	1.10	1.50	1.87
0.100				0.65	1.70	1.12	0.88	1.70	1.50	1.10	1.70	1.87
0.112				0.65	1.90	1.12	0.88	1.90	1.50	1.10	1.90	1.87
0.125				0.65	2.15	1.12	0.88	2.15	1.50	1.10	2.15	1.87
0.140				0.65	2.37	1.12	0.88	2.37	1.50	1.10	2.37	1.87
0.160				0.65	2.60	1.12	0.88	2.60	1.50	1.10	2.60	1.87
0.180				0.65	2.96	1.12	0.88	2.96	1.50	1.10	2.96	1.87

TABLE III

Typical Formed Section Repair
Figure 1 (Sheet 2)

FASTENER PER INCH WIDTH, 2024-T3 OR T4 MATERIAL														
ORIGINAL SHEET GAGE	PROTRUDING HEAD							100° COUNTERSUNK (SHEAR) HEAD						
	BACR15BB()D()				BACB30FM()-() OR BACB30MY()K()			BACR15CE()D()				BACB30FN()-() OR BACB30NW()K()		
	5/32	3/16	1/4	5/16	3/16	1/4	5/16	5/32	3/16	1/4	5/16	3/16	1/4	5/16
0.040 0.045	4 4	3 3			3 3									
0.050 0.056	4 4	3 3	3 3		3 3	3 3		5 5						
0.063 0.071	5 5	3 4	3 3	2 2	3 3	3 3	2 2	5 5	4 5			3 3		
0.080 0.090		4 5	3 3	2 2	3 3	3 3	2 2	6	5 5	4 4		3 3	3 3	
0.100 0.112		5	3 3	2 2	3 3	3 3	2 2		5	4 4	3 3	3 3	3 3	2 2
0.125 0.140			4 4	3 3	3 3	3 3	2 2			4 4	3 3	3 3	3 3	2 2
0.160 0.180			5 5	3 4	3 4	3 3	2 2			5 5	3 4	3 4	3 3	3 3

TABLE IV

EXAMPLE (PARTIALLY SEVERED MEMBER)

ASSUME DAMAGE IN 0.071 2024-T3 MATERIAL. MEASURE ALONG SURFACE AND FIND WIDTH OF DAMAGE, 1.58. FIND IN FASTENER PER INCH WIDTH TABLE, OPPOSITE 0.071, FOUR 3/16 DIA BACR15BB RIVETS REQUIRED PER INCH. MULTIPLY 1.58 x 4 RIVETS = 6.32 (USE SEVEN MINIMUM) 3/16 DIA RIVETS. ALWAYS USE NEXT HIGHER NUMBER OF FASTENERS OR MORE.

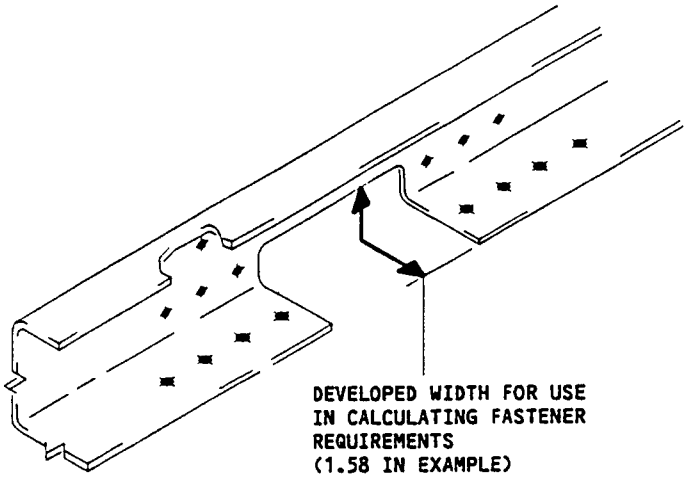

Typical Formed Section Repair
Figure 1 (Sheet 3)

FASTENER PER INCH WIDTH, 7075-T6 MATERIAL													
ORIGINAL SHEET GAGE	PROTRUDING HEAD							100° COUNTERSUNK (SHEAR) HEAD					
	BACR15BB()D()				BACB30FM()-() OR BACB30MY()K()			BACR15CE()D()			BACB30FN()-() OR BACB30NW()K()		
	5/32	3/16	1/4	5/16	3/16	1/4	5/16	3/16	1/4	5/16	3/16	1/4	5/16
0.040	4	3			3								
0.045	4	3			3								
0.050	5	3	3		3	3							
0.056	5	4	3		3	3							
0.063		4	3	2	3	3	2	5			4		
0.071		5	3	2	3	3	2	5			4		
0.080		5	3	2	3	3	2		4		4	3	
0.090			3	2	3	3	2		4		4	3	
0.100			4	3	3	3	2		4	3	4	3	2
0.112			4	3	3	3	2		4	3	4	3	2
0.125			5	3	3	3	2		5	3	4	3	2
0.140			5	3	4	3	2		5	3	4	3	2
0.160				4	4	3	2			4	4	3	2
0.180				4	4	3	2			4	4	3	2

TABLE V

EXAMPLE (COMPLETELY SEVERED MEMBER)

ASSUME DAMAGE IN 0.063 7075-T6 CHANNEL MEASURE ALONG SURFACE AND FIND WIDTH OF DAMAGE, 5.82. FIND IN FASTENER PER INCH WIDTH TABLE. OPPOSITE 0.063, FOUR 3/16 DIA BACR15BB RIVETS REQUIRED PER INCH. MULTIPLY 5.82 X 4 RIVETS = 23.28 (USE TWENTY FOUR MINIMUM) 3/16 DIA RIVETS. ALWAYS USE NEXT HIGHER NUMBER OF FASTENERS OR MORE.

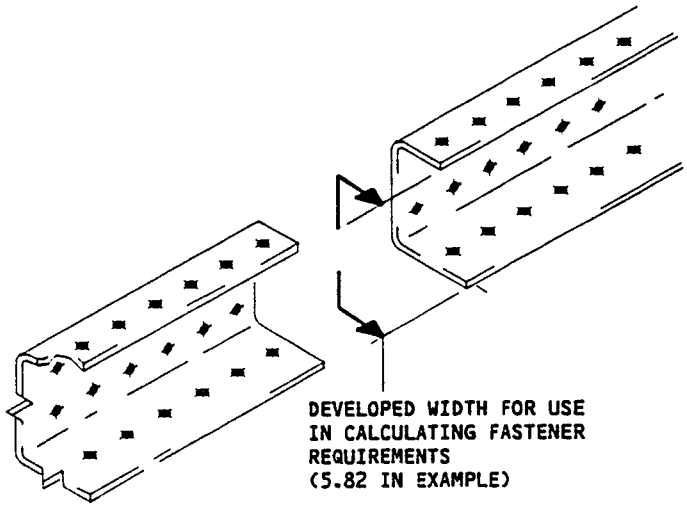

Typical Formed Section Repair
Figure 1 (Sheet 4)

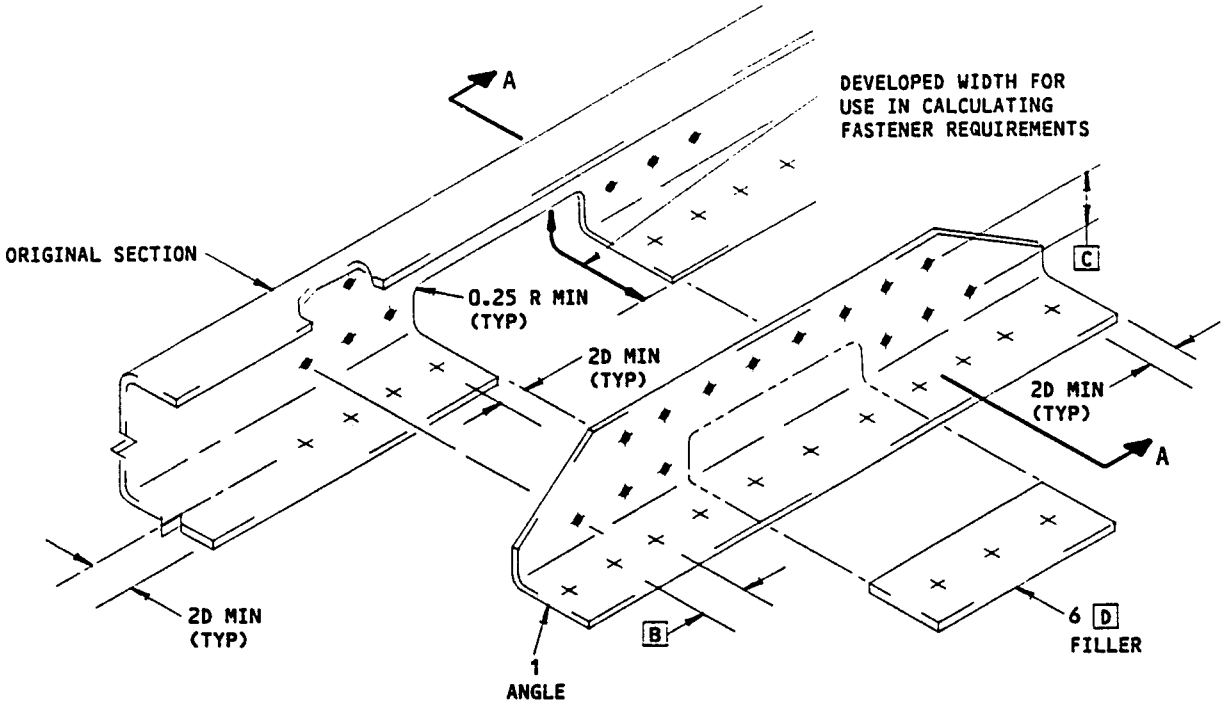

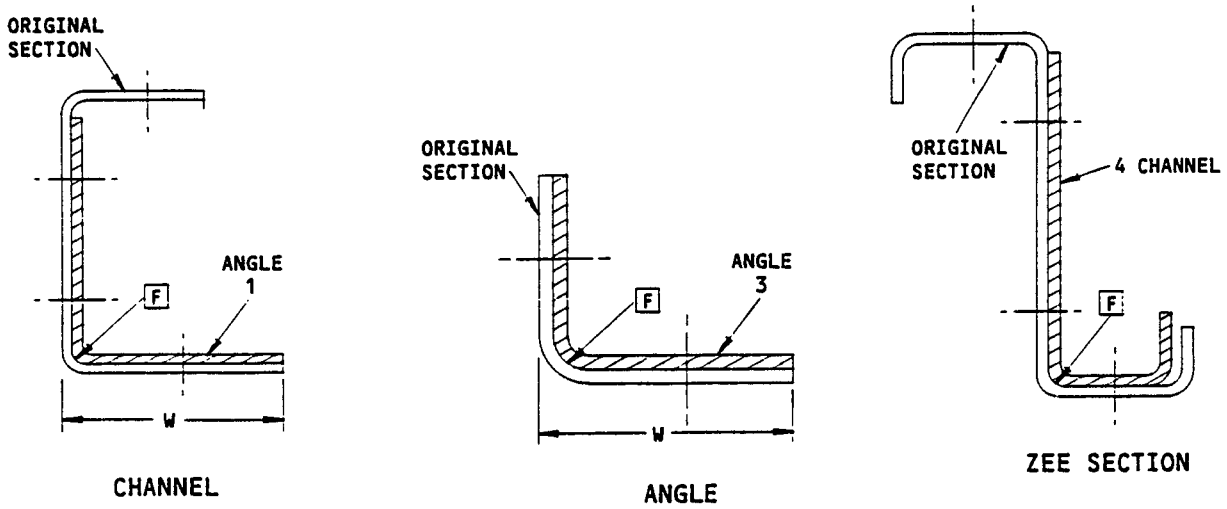

SECTION A-A

PARTIALLY SEVERED MEMBER
TYPICAL FORMED CHANNEL REPAIR SHOWN
OTHER FORMED SECTIONS SIMILAR

DETAIL I E

Typical Formed Section Repair
Figure 1 (Sheet 5)

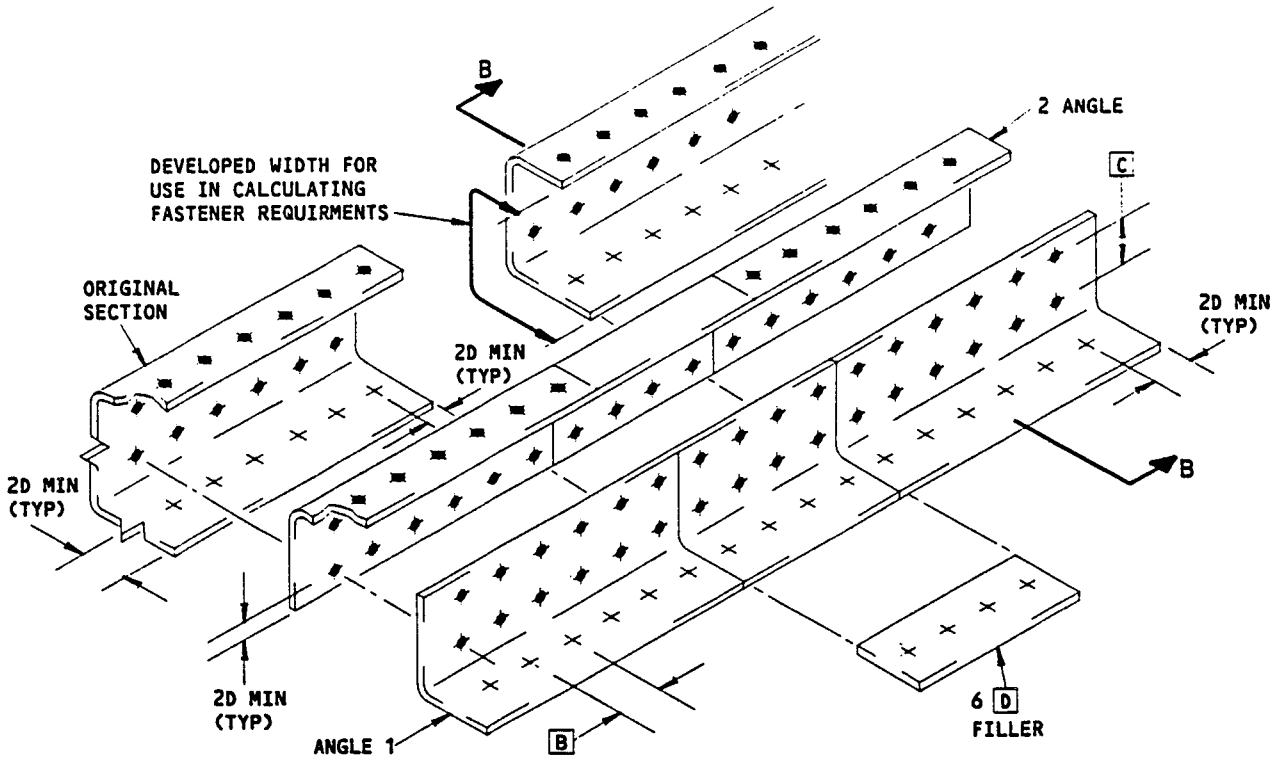

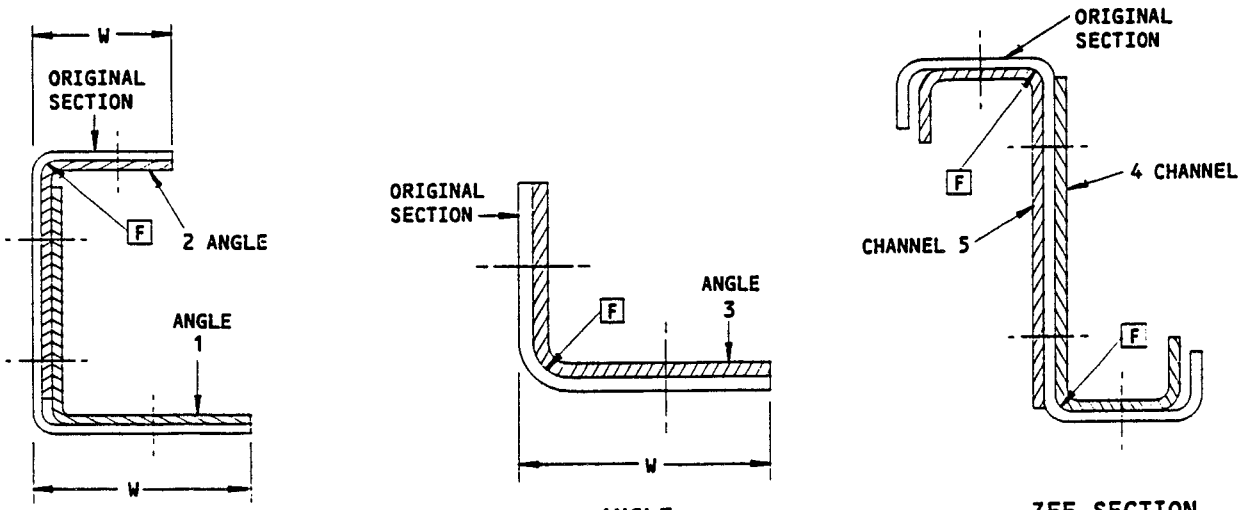

SECTION B-B

COMPLETELY SEVERED SECTION
TYPICAL FORMED CHANNEL REPAIR SHOWN
OTHER FORMED SECTIONS SIMILAR

DETAIL II

Typical Formed Section Repair
Figure 1 (Sheet 6)

REPAIR INSTRUCTIONS

1. Cut and remove damaged portion of extrusion.
2. Calculate the gages and lengths of the repair parts and fabricate them accordingly. [J]
3. Assemble the repair parts and drill the fastener holes.
4. Remove the repair parts.
5. Break sharp edges of original and repair parts 0.015 to 0.030 inch radius.
6. Remove all nicks, scratches, burrs, sharp edges and corners from original and repair parts.
7. Apply a chemical conversion coating to the repair parts and the raw edges of the original parts as given in SRM 51-10-2.
8. Apply one coat of BMS 10-11, Type 1 primer to all repair parts, excluding those in fuel tank areas, in accordance with 51-21 of the Maintenance Manual. For fuel tank areas, apply one coat of BMS 10-20, Type II to all repair parts, as given in AMM 51-21.
9. Assemble repair parts with all faying surfaces wet with sealant. Install fasteners wet with sealant and fillet seal the nut, collar, or upset end of rivets. Pack all cavities with sealant and inject sealant in cavities between original and filler extrusion. Use BMS 5-95 sealant in areas where temperatures are below 160°F (71°C), BMS 5-26 sealant in fuel tank areas and where temperatures are below 250°F (121°C), and Dow Corning 93-006 sealant applied per BAC5000 where the temperature exceeds 250°F (121°C).
10. Restore original finish as given in AMM 51-21.

NOTES

- REFER TO SRM 51-00-4, FIG. 3 TO DECIDE IF THIS REPAIR WILL HAVE AN EFFECT ON A STRUCTURALLY SIGNIFICANT ITEM (SSI). IF IT DOES HAVE AN EFFECT ON AN SSI, DO A DAMAGE TOLERANCE ANALYSIS OR CONTACT BOEING.
- THIS REPAIR DOES NOT APPLY TO:
  - WING INTERSPAR STIFFENERS
  - SPAR CHORDS
  - WING CENTER SECTION SPANWISE BEAM CHORDS
  - OVERWING SEAT TRACKS BETWEEN STA 540 AND STA 767 FOR THE 737-100
  - OVERWING SEAT TRACKS BETWEEN STA 540 AND STA 727B FOR THE 737-200.
  - AFT CARGO DOOR'S UPPER AND LOWER CROSS BEAMS. REFER TO SB 737-52A1079, AND
  - FORWARD CARGO DOOR'S LOWER CROSS BEAM. REFER TO SB 737-52A1100.
- WHEN YOU USE THIS REPAIR, REFER TO:
  - AMM 51-21 FOR INTERIOR AND EXTERIOR FINISHES
  - AMM 51-31 FOR SEALS AND SEALING
  - SRM 51-10-2 FOR PROTECTIVE TREATMENT OF METALS
  - SRM 51-20-04 FOR SEALING OF REPAIRS
  - SRM 51-30 FOR FASTENER CODE, REMOVAL, INSTALLATION, HOLE SIZES AND EDGE MARGINS.

[A] SELECTION OF GAGE DETERMINED IN CONJUNCTION WITH PART 3 TO GIVE A COMBINED CROSS-SECTIONAL AREA OF ALL PLATES 1.25 TIMES GREATER THAN THE ORIGINAL 2024 EXTRUSION OR 1.35 TIMES GREATER THAN THE ORIGINAL 7178 OR 7075 EXTRUSION. EACH LEG OF THE EXTRUSION MUST BE JOINED BY MATERIAL PROPORTIONATELY GREATER THAT THE ORIGINAL AREA

[B] SELECTION OF GAGE DETERMINED BY FASTENER SPACING FROM TABLE I AND AREA REQUIREMENTS IN CONJUNCTION WITH OTHER REPAIR PARTS AS SHOWN IN NOTE [A]. IF NECESSARY FOR AREA REQUIREMENTS, ADDITIONAL PLATES MAY BE FITTED USING TABLE I AS A GUIDE TO MINIMUM GAGE

[C] ALL FASTENERS IN REPAIR TO BE OF SAME NOMINAL DIAMETER, WHICH IS TO BE DETERMINED BY AVAILABLE EDGE MARGINS AND SKIN THICKNESS AVAILABLE FOR COUNTERSINKING. EDGE MARGINS MUST NOT BE LESS THAN 2D. RECOMMENDED FASTENER SPACING 4D. (D = DIAMETER OF FASTENER)

[D] INSTALL IN SUCH A SEQUENCE, OR COMBINATION OF SUITABLE FASTENERS AND NUTS, THAT WILL PREVENT INTERFERENCE OF NUTS. INTERFERENCE MAY BE PREVENTED BY DIMENSIONAL CONTROL, PROVIDED THAT MINIMUM EDGE MARGIN AND SPACING IS MAINTAINED

Typical Extruded Section Repair
Figure 1 (Sheet 1)

BOEING PROPRIETARY - Copyright © - Unpublished Work - See title page for details.

NOTES (Cont)

[E] SUITABLE PROTRUDING HEAD FASTENERS

BOLT:
BACB30FM HI-LOK
BACB30FP HI-LOK, 1/64 OVERSIZE

NUT:
BACC30M HI-LOK COLLAR

[F] SUITABLE FLUSH HEAD FASTENERS

BOLT:
BACB30FN HI-LOK
BACB30FQ HI-LOK, 1/64 OVERSIZE
BACB30LU STANDARD AND OVERSIZE [L]

NUTS:
BACC30M HI-LOK COLLAR
BACN10JC LOCKNUT (INSTALL WITH 0.062 THICK STANDARD WASHER)

[G] SELECTION OF GAGE DETERMINED IN CONJUNCTION WITH PART 6 TO GIVE A COMBINED CROSS-SECTIONAL AREA OF ALL PLATES 1.25 TIMES GREATER THAT THE ORIGINAL 2024 EXTRUSION OR 1.35 TIMES GREATER THAN THE ORIGINAL 7178 OR 7075 EXTRUSION. EACH LEG OF THE EXTRUSION MUST BE JOINED BY MATERIAL PROPORTIONATELY GREATER THAN THE ORIGINAL AREA

[H] SELECTION OF GAGE DETERMINED BY FASTENER SPACING FROM TABLE II AND AREA REQUIREMENTS IN CONJUNCTION WITH OTHER REPAIR PARTS AS IN NOTE [G]. IF NECESSARY FOR AREA REQUIREMENTS, ADDITIONAL PLATES MAY BE FITTED USING TABLE II AS A GUIDE TO MINIMUM GAGE

[J] THE BEND RADIUS OF REPAIR PART MUST BE MADE SO THAT THE OUTSIDE RADIUS OF THE INNER NESTING PART IS GREATER THAN THE INSIDE RADIUS OF ADJACENT PART

[K] 7075-T6 CAN BE SUBSTITUTED PROVIDED THE REPAIR PLATES COMBINED CROSS-SECTIONAL AREA AND THICKNESS ARE 1.35 TIMES GREATER THAN THOSE OF THE ORIGINAL PART

[L] DO NOT INSTALL THESE TENSION HEAD FASTENERS WHERE SHEAR HEAD FASTENERS WERE INSTALLED IF TENSION HEAD FASTENER INSTALLATION WOULD RESULT IN A KNIFE EDGE CONDITION

SYMBOLS

REPAIR FASTENER LOCATION

Typical Extruded Section Repair
Figure 1 (Sheet 2)

REPAIR MATERIAL							
		2024 EXTRUSIONS		7075 EXTRUSIONS		7178 EXTRUSIONS	
PART [J]		QTY	MATERIAL	QTY	MATERIAL	QTY	MATERIAL
1	PLATE	AS REQ	0.040 CLAD OR BARE 2024-T3	AS REQ	0.040 CLAD OR BARE 7075-T6	AS REQ	0.040 CLAD OR BARE 7178-T6 [K]
2	PLATE	AS REQ	0.040 TO 0.063 CLAD OR BARE 2024-T3 [A]	AS REQ	0.040 TO 0.063 CLAD OR BARE 7075-T6 [A]	AS REQ	0.040 TO 0.063 CLAD OR BARE 7178-T6 [A] [K]
3	PLATE	AS REQ	0.050 TO 0.125 CLAD OR BARE 2024-T3 [B]	AS REQ	0.050 TO 0.125 CLAD OR BARE 7075-T6 [B]	AS REQ	0.050 TO 0.125 CLAD OR BARE 7178-T6 [B] [K]
4	FILLER	AS REQ	SAME AS ORIGINAL EXTRUSION	AS REQ	SAME AS ORIGINAL EXTRUSION	AS REQ	SAME AS ORIGINAL EXTRUSION [K]
5	PLATE	AS REQ	0.040 TO 0.063 CLAD OR BARE 2024-T3 [G]	AS REQ	0.040 TO 0.063 CLAD OR BARE 7075-T6 [G]	AS REQ	0.040 TO 0.063 CLAD OR BARE 7178-T6 [G] [K]
6	PLATE	AS REQ	0.040 TO 0.063 CLAD OR BARE 2024-T3 [H]	AS REQ	0.040 TO 0.063 CLAD OR BARE 7075-T6 [H]	AS REQ	0.040 TO 0.063 CLAD OR BARE 7178-T6 [H] [K]

MINIMUM THICKNESS OF REPAIR PART 3	
FASTENER SPACING	REPAIR PLATE GAGE
UP TO 0.75	0.050
OVER 0.75 TO 0.84	0.056
OVER 0.84 TO 0.94	0.063
OVER 0.94 TO 1.06	0.071
OVER 1.06 TO 1.20	0.080
OVER 1.20 TO 1.35	0.090
OVER 1.35 TO 1.50	0.100
OVER 1.50 TO 1.68	0.112
OVER 1.68 TO 1.77	0.125

TABLE I

MINIMUM THICKNESS OF REPAIR PART 6	
FASTENER SPACING	REPAIR PLATE GAGE
UP TO 0.75	0.040
OVER 0.75 TO 0.84	0.056
OVER 0.84 TO 1.75	0.063

TABLE II

FASTENER DIAMETER	FASTENERS PER INCH WIDTH OF FLANGE OR WEB OF ORIGINAL EXTRUSION [C]		
	2024 EXTRUSION	7075 EXTRUSION	7178 EXTRUSION
5/32	5.0	5.3	5.4
3/16	4.2	4.4	4.5
1/4	3.1	3.3	3.4

TABLE III

Typical Extruded Section Repair
Figure 1 (Sheet 3)

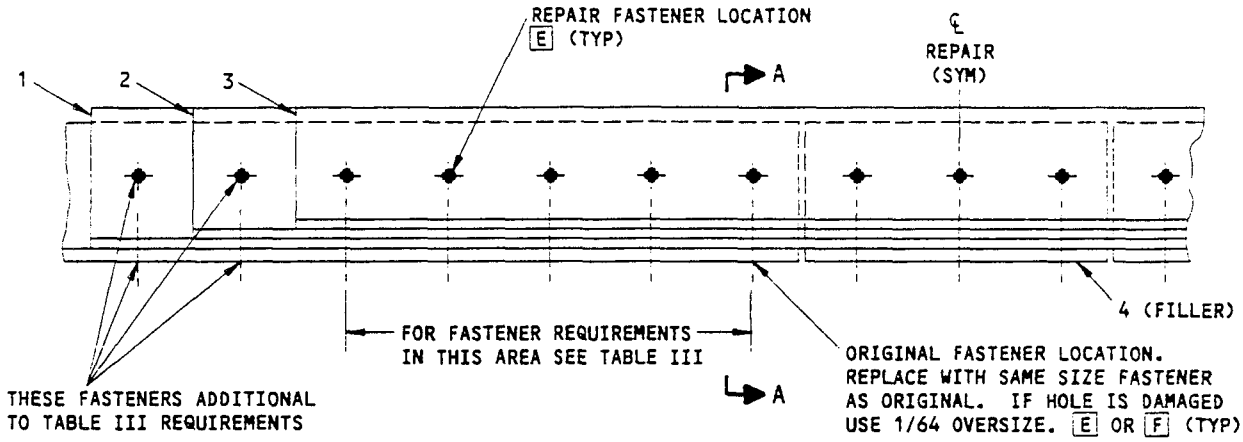

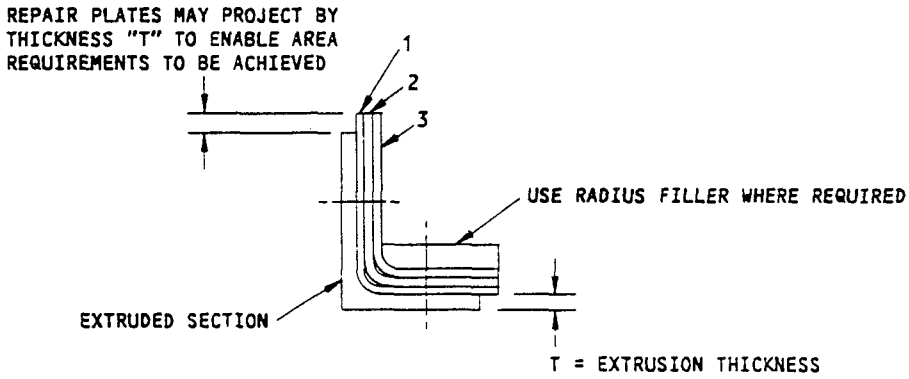

SEE DETAILS I, II, III AND IV
FOR TYPICAL REPAIRS OF OTHER SECTIONS

SECTION A-A

TYPICAL REPAIR OF EXTRUSIONS GREATER THAN 0.080 GAGE

Typical Extruded Section Repair
Figure 1 (Sheet 4)

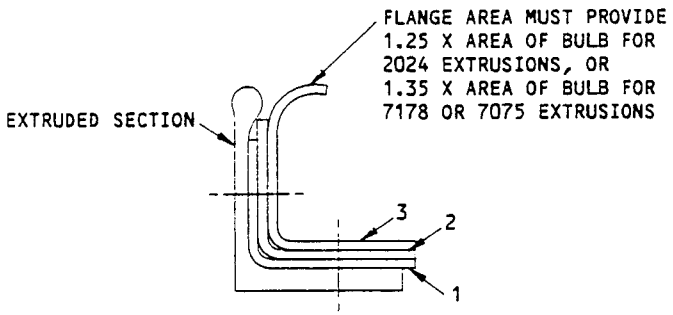

DETAIL I

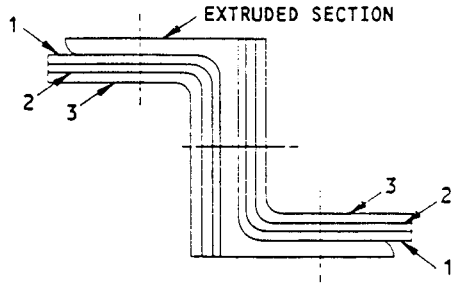

DETAIL II

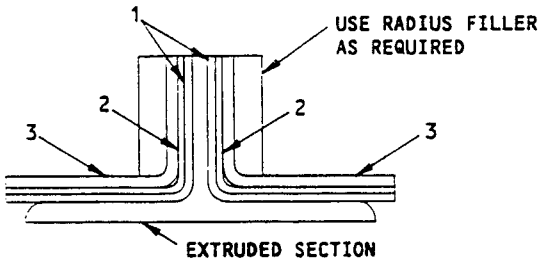

DETAIL III

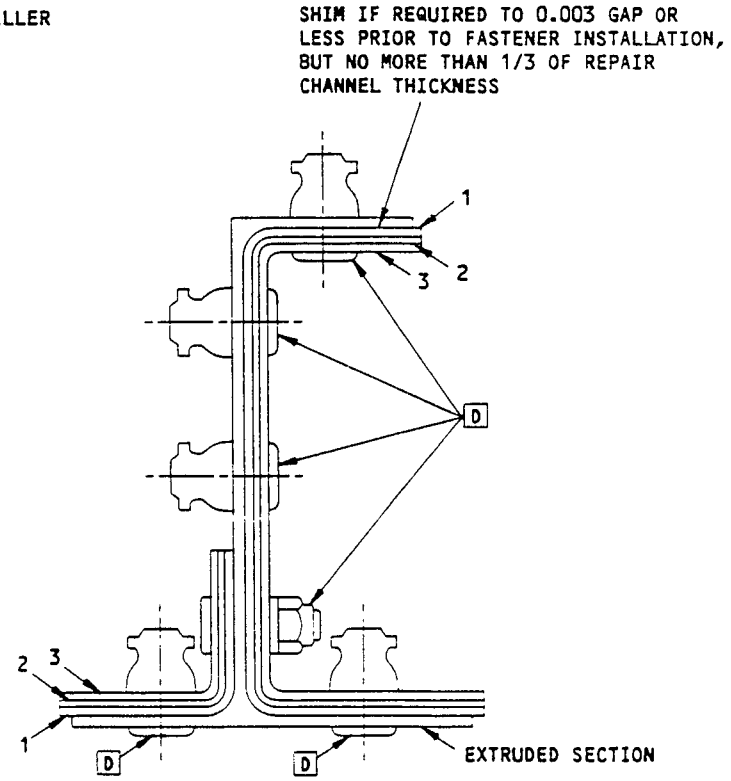

DETAIL IV

TYPICAL REPAIR OF EXTRUSIONS GREATER THAN 0.080 GAGE

Typical Extruded Section Repair
Figure 1 (Sheet 5)

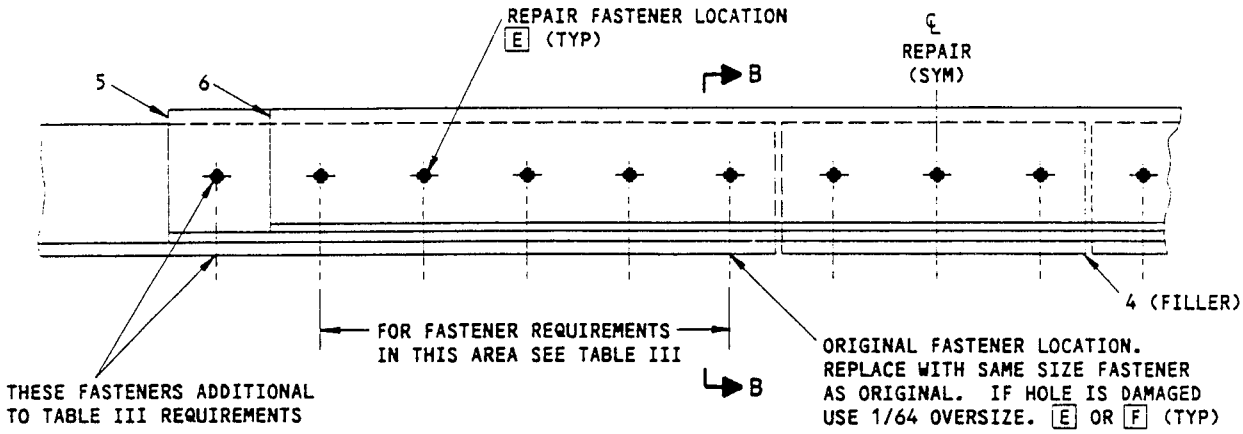

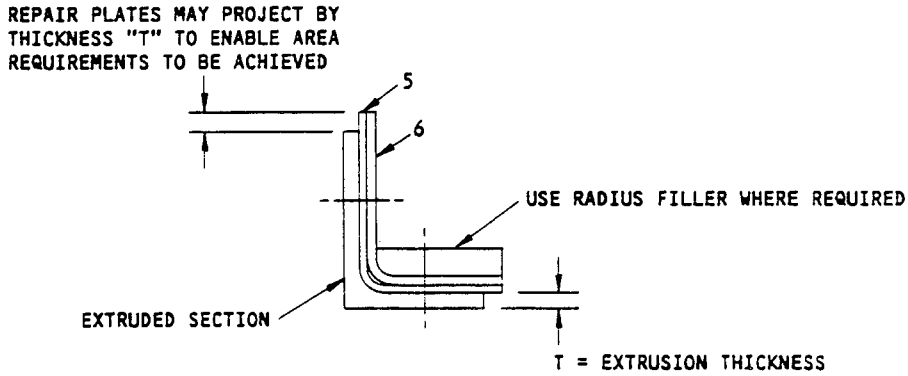

SEE DETAILS V, VI, VII AND VIII
FOR TYPICAL REPAIRS OF OTHER SECTIONS

SECTION B-B

TYPICAL REPAIR OF EXTRUSIONS 0.080 GAGE AND LESS

Typical Extruded Section Repair
Figure 1 (Sheet 6)

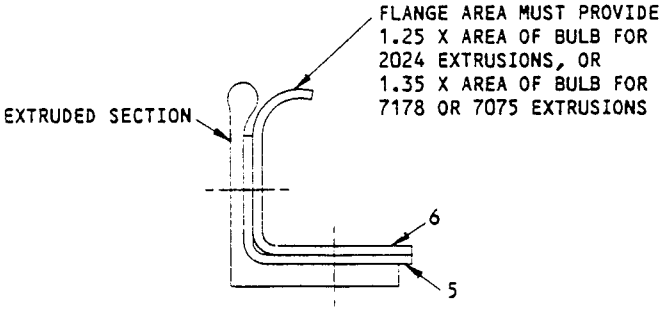

DETAIL V

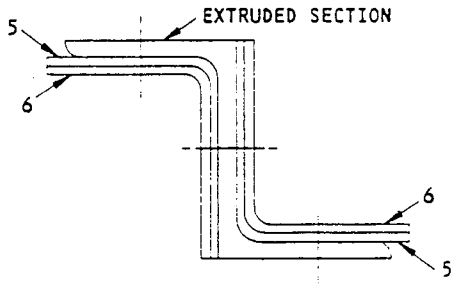

DETAIL VI

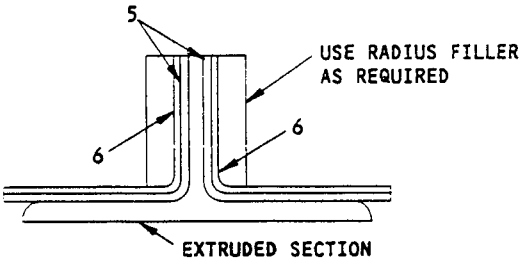

DETAIL VII

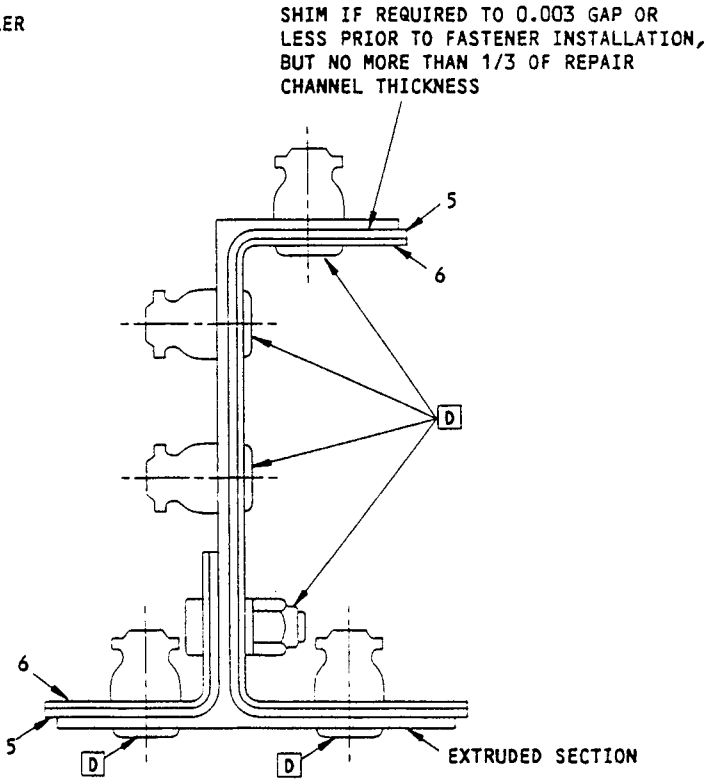

DETAIL VIII

TYPICAL REPAIR OF EXTRUSIONS 0.080 GAGE AND LESS

Typical Extruded Section Repair
Figure 1 (Sheet 7)

APPLICABILITY
THESE REPAIRS DO NOT APPLY TO WING INSPAR STIFFENERS.

REPAIR INSTRUCTIONS

1. Remove fasteners and sealant over the area to be repaired.
2. Cut out the damaged portion of the extrusion in such a manner that fastener edge margins are maintained.
3. Calculate the gages of repair parts. Refer to sample calculation.
4. Calculate the number of fasteners to develop the strength of the repair parts. Refer to sample calculation.
5. Make the repair parts. Do not machine repair parts from large sections with strength properties reduced from those of the part being repaired.
6. Assemble the repair parts and drill and ream the fastener holes in existing and new locations.
7. Remove all burrs, nicks, sharp edges, and corners from the cut original parts and the repair parts. Chamfer or radius 0.015 to 0.030 inch on all cut edges.
8. Apply a chemical conversion coating to the repair parts and the cut edges of existing parts.
9. Assemble repair parts with all faying surfaces wet with sealant. Install fasteners wet with sealant and fillet seal the nut, collar, or upset end of rivets. Pack all cavities with sealant and inject sealant in cavities between original and filler extrusion. Use BMS 5-95 sealant in areas where the temperatures are below 160°F (71°C), BMS 5-26 sealant in fuel tank areas and where temperatures are below 250°F (121°C), and Dow Corning 93-006 sealant where the temperature exceeds 250°F (121°).
10. Restore finish after completion of repair.

NOTES

- REFER TO SRM 51-00-4, FIG. 3 TO DECIDE IF THIS REPAIR WILL HAVE AN EFFECT ON A STRUCTURALLY SIGNIFICANT ITEM (SSI). IF IT DOES HAVE AN EFFECT ON AN SSI, DO A DAMAGE TOLERANCE ANALYSIS OR CONTACT BOEING.
- THIS REPAIR MAY BE USED TO PARTIALLY REPLACE AN EXTRUSION OR TO SPLICE AN EXTRUSION WITH A CROSS SECTION CRACK INCLUDING A COMPLETE BREAK.
- REPAIR IS SYMMETRICAL ON EACH SIDE OF JOINT.
- REFER TO SRM 51-80 WHEN THE REPAIR INVOLVES CONTROL SURFACES.
- EXTRUSION REPAIRS MADE WITH "AND" EXTRUDED SECTIONS ARE PREFERRED.
- REPAIRS SHOWN ARE FOR CONSTANT SECTION EXTRUSIONS.
- THIS REPAIR PROCEDURE IS A SUPPLEMENT TO THE EXISTING REPAIR PROCEDURES IN SRM 51-40-4.
- EXISTING REPAIRS MADE ACCORDING TO OTHER FIGURE(S) IN SRM 51-40-4 ARE SATISFACTORY AND ARE NOT AFFECTED BY THIS PROCEDURE.

Extruded Section Repair - Machine Tapered
Figure 2 (Sheet 1)

BOEING PROPRIETARY - Copyright © - Unpublished Work - See title page for details.

NOTES (CONT)

- IT IS MANDATORY THAT REPAIR PARTS USED FOR SPANWISE BEAM STIFFENERS OR FRONT SPAR STIFFENERS IN THE WING CENTER SECTION HAVE ROUNDED CORNERS AND EDGES (RADIUS EQUAL TO GAGE MINIMUM) IF THEY CONTACT A FUEL CELL.

- REFER TO THE FOLLOWING WHEN USING THIS REPAIR.

  51-10-2 FOR PROTECTIVE TREATMENT OF METAL REPAIR PARTS.

  51-30 FOR FASTENER CODE, REMOVAL AND INSTALLATION, HOLE SIZES, EDGE MARGINS AND FASTENER STRENGTH.

  51-30 OF THE MAINTENANCE MANUAL FOR SEALS AND SEALING.

  51-20 OF THE MAINTENANCE MANUAL FOR FINISHES.

[A] FASTENERS IN ROW X AND Y MAY BE STAGGERED TO SUIT DEPTH OF EXTRUSION AND TO SUIT 3D TO 5D SPACING. THE TOTAL NUMBER OF FASTENERS THRU WEB INCLUDE ROWS X AND Y.

[B] MACHINE TAPER AT 20 TO 1 SLOPE AND TO 0.040 MINIMUM THICKNESS OR TO MAXIMUM THICKNESS EQUAL TO 1/3 THE THICKNESS OF THE FLANGE BEING SPLICED.

[C] RADIUS OR CHAMFER TO SUIT RADIUS OF ORIGINAL EXTRUSION AND INSTALL PREPACK SEAL - TYPICAL.

[D] DETERMINE DIAMETER FROM TABLE I AND FOLLOWING CRITERIA:

(a) WHERE FLUSH HEAD FASTENERS ARE REQUIRED, INSTALL BACB30FN HI-LOKS AND WHERE PROTRUDING HEAD FASTENERS ARE REQUIRED, INSTALL BACB30FM HI-LOKS.

(b) FASTENER DIAMETER SHOULD NOT EXCEED 1/16 INCH GREATER THAN THE ORIGINAL FASTENER UNLESS ADEQUATE EDGE MARGINS CAN BE MAINTAINED AND KNIFE EDGES AVOIDED.

[E] MAGNETIC REPAIR MATERIALS MUST NOT BE INSTALLED WITHIN 3.0 FEET OF THE FLUX VALVE. REFER TO THE MAINTENANCE MANUAL FOR COMPASS SYSTEM MAINTENANCE PRACTICES.

[F] INSTALL SHIMS TO MAXIMUM GAP EQUAL TO 0.005 INCHES.

SYMBOLS

G = ORIGINAL THICKNESS OF UPPER FLANGE

G_1 = THICKNESS OF UPPER FLANGE OF REPAIR MEMBER

H = ORIGINAL THICKNESS OF LOWER FLANGE

H_1 = THICKNESS OF LOWER FLANGE OF REPAIR MEMBER

T = ORIGINAL THICKNESS OF VERTICAL LEG

T_1 = THICKNESS OF VERTICAL LEG OF REPAIR MEMBER WHERE ONE REPAIR MEMBER IS USED

Extruded Section Repair - Machined Tapered
Figure 2 (Sheet 2)

T_2 THICKNESS OF VERTICAL LEG OF REPAIR MEMBER WHERE TWO REPAIR MEMBERS ARE USED

A_{FG} = UPPER REPAIR FLANGE AREA IF REPAIR FLANGE DOES NOT PROJECT PAST END OF FLANGE OF ORIGINAL MEMBER

A_{FH} = LOWER REPAIR FLANGE AREA IF REPAIR FLANGE DOES NOT PROJECT PAST END OF FLANGE OF ORIGINAL MEMBER

A_W = REPAIR MEMBER WEB AREA

D = ONE FASTENER DIAMETER

F_{TU} = ULTIMATE TENSILE STRENGTH

F_{BRU} = ULTIMATE BEARING STRENGTH

PSI = POUNDS PER SQUARE INCH

+ ORIGINAL FASTENER LOCATIONS [D]

REPAIR FASTENER LOCATION. INSTALL BACB30FM HI-LOKS. SEE TABLE I FOR DIAMETER

TOTAL MATERIAL THICKNESS (INCHES)	FASTENER DIAMETER (INCHES)
UNDER 0.50	3/16 or 1/4
0.50 to 0.65	1/4 or 5/16
0.66 to 0.80	5/16 or 3/8
0.81 AND OVER	3/8

TABLE I

REPAIR MATERIAL			
PART		QTY	MATERIAL
1	REPAIR SECTION	1 or 2	SAME AS MEMBER BEING REPAIRED OR EQUIVALENT. SEE REPAIR INSTRUCTIONS, STEP 5
2	SHIM	1 or 2	
3	FILLER	1	
4	REPAIR SECTION	1	

Extruded Section Repair - Machine Tapered
Figure 2 (Sheet 3)

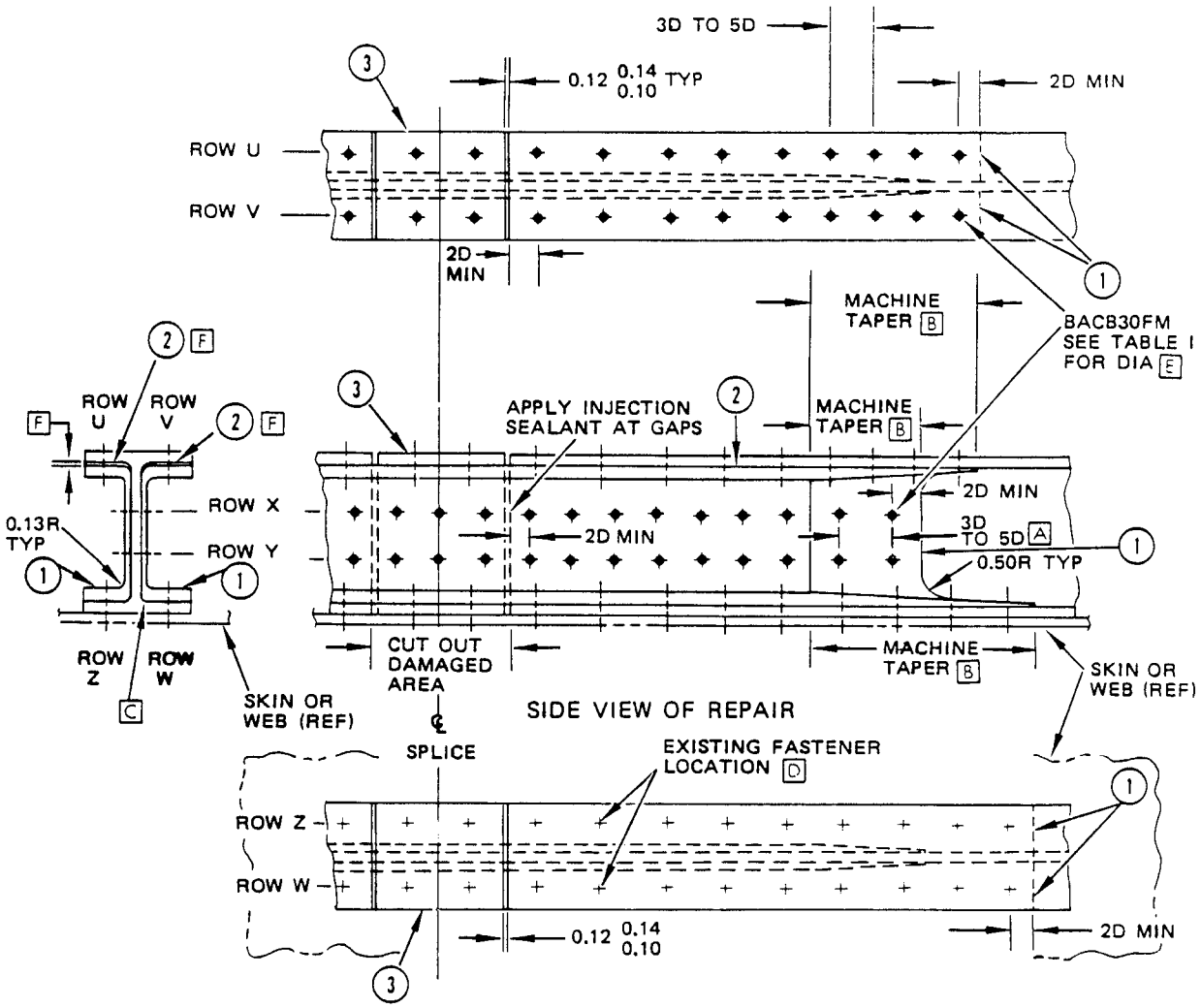

Extruded Section Repair - Machine Tapered
Figure 2 (Sheet 4)

SAMPLE CALCULATION FOR AREA AND GAGE

The following example shows the calculation required to repair an extrusion of the following dimensions:

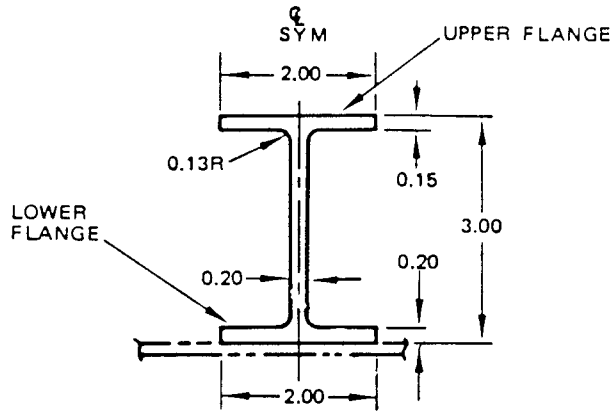

Material: 2024-T4 extrusion
Thickness of repair part (at constant section) flanges shall be at least 1.25 x thickness of original extrusion and area shall be at least 1.25 x area of original (see symbols in notes).

REPAIR PART (1)

UPPER FLANGE THICKNESS - G1

1.25 x FLANGE GAGE = 1.25 x 0.15
= 0.188

1.25 x ORIGINAL AREA = 1.25 x 2.00/2 x 0.15
= 0.188

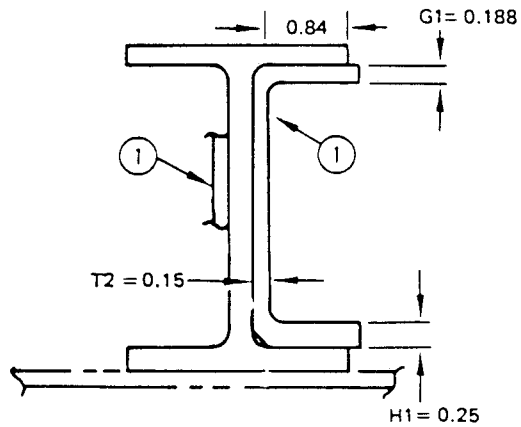

NOTE: Radius area of original section ignored.

Extruded Section Repair - Machine Tapered
Figure 2 (Sheet 5)

A_{FG} = Repair flange area if gage = 0.188 and if repair flange does not project past end of flange of original member

$$A_{FG} = 1 - T/2 - \frac{1.25T}{4} \times 0.188$$

$$A_{FG} = 1 - \frac{0.20}{2} - \frac{1.25(0.20)}{4} \times 0.188$$

A_{FG} = 0.84 x 0.188 = 0.158, which is less than the area requirement

So project end of repair flange to make area equal to 0.188. Flange may project by thickness of repair flange.
0.188(0.188) = additional area = 0.035

A_{FG} + 0.035 = 0.158 + 0.035 = 0.193, which is greater than 0.188 and therefore meets the area requirement.

LOWER FLANGE THICKNESS

1.25 x flange gage = 1.25 x 0.20 = 0.25

1.25 x original area = 1.25 x 2.00/2 x 0.20 = 0.25

A_{FH} = Repair flange area if gage = 0.25 and if repair flange does not project past end of flange of original member.

A_{FH} = 0.84 x 0.25 = 0.21, which is less than the area requirement

So project end of repair flange to make area equal to 0.25. Flange may project by thickness of repair flange.

0.25(0.25) = additional area = 0.0625
A_{FH} + 0.0625 = 0.21 + 0.0625 = 0.272, which is greater than 0.25 and therefore meets the area requirement.

WEB THICKNESS - T2

1.25 x web gage x 1/2 = 1.25 x 0.20 x 1/2 - 0.125

1.25 x original area = 1.25 x 0.20 (3.00-0.15-0.20)
= 0.663

A_W = repair web area

If repair gage = 0.125,
then A_W = 0.125 [3.00-0.15-0.188-0.25-0.20]
A_W = 0.2765
$2A_W$ = 0.553, which is less than area requirement.
So set $2A_W$ = 0.663 to determine larger repair gage
0.663 = T2 [3.00-0.15-0.188-0.25-0.20] x 2
T2 = 0.15

Extruded Section Repair - Machined Tapered
Figure 2 (Sheet 6)

SAMPLE CALCULATION - FASTENER REQUIREMENTS

NOTE: Fastener requirements are calculated to develop the strength of repair parts. This sample calculation is to determine the number of fasteners required for the repair section identified in the previous calculation. Strengths of fasteners are obtained from 51-30-10.

The following conditions shall be used to determine the minimum fastener requirements:

1. Conservatively install sufficient fasteners in the constant section to develop the repair, using a minimum of two fasteners.

2. Fastener requirements in tapered section shall be based on length of tapered section, with 2D edge margin at end of part and about 4D spacing (3D to 5D variation).

   NOTE: The thickness of tapered section is to be per note [B].

3. Length of repair part is to be determined by length of longest section (flange or web) of repair part.

UPPER FLANGE

Required capability = $[(0.84 + 0.188) \times 0.188 - 0.19(0.188)]F_{tu}$
(using 3/16 diameter
Hi-Loks)

$$= [\underbrace{(1.028) \times 0.188}_{\text{Area Calculation of Repair Flange}} - \underset{\text{Hole Size}}{0.19}(\underset{\text{Repair Flange Thickness}}{0.188})] \times \underset{\text{Ultimate Tensile Strength of 2024-T4 Extrusion}}{61{,}000}$$

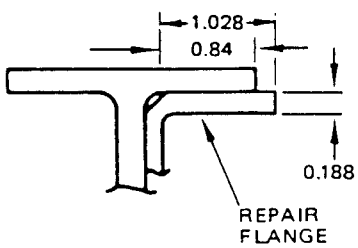

Required capability = 9,610 lbs.

Extruded Section Repair - Machine Tapered
Figue 2 (Sheet 7)

CONSTANT SECTION:

For 3/16 diameter hi-loks, the fasteners are bearing critical for the 0.150 original flange. The bearing allowable is 2,150 pounds per fastener. The number of fasteners required in constant section is 9,610/2,150 = 4.47. Use a minimum of 5 fasteners and space between 3D and 5D.

TAPERED SECTION:

Thickness at end of part = 1/3 (0.15) = 0.05 per note [B]. Then length of tapered section for 20 to 1 taper ratio = (0.188 - 0.05)20 = 2.76 inches. Using 2D edge margin for end fastener and 2D from start of taper to first fastener in tapered section, distance remaining is 2.76 - 4D = 2.76 - 4(0.188) = 2.01 inches. Install additional fasteners in tapered section at 3 to 5 diameter spacing. Two additional would give $\frac{2.01}{3(0.188)}$ = 3.6D spacing

WEB

Required capability (using 3/16 diameter Hi-Loks) = [0.15(3.00-0.15-0.188-0.25-0.20) - 0.19(0.15)2] F_{tu}

$$= [\underbrace{0.15(2.212)}_{\text{Area Calculation of Repair Web}} - \underbrace{0.19}_{\text{Hole Size}}(\underbrace{0.15}_{\text{Repair Web Thickness}})2] \times \underbrace{61{,}000}_{\text{Ultimate Tensile Strength of 2024-T4 Extrusion}}$$

= 16,763 lbs. for each repair web

Required capability = 2(16,763)

= 33,526 lbs. for both repair webs

CONSTANT SECTION:

From previous calculations, 3/16 diameter hi-loks are bearing critical in 0.15 thick material. So 2,150 pounds of load per fastener could be transferred into each repair web if the repair web were more critical than the original web. The fasteners react in double shear with respect to the original web. So 2 x 2,150 = 4,300 pounds per fastener could be critical. Bearing allowable for 0.20 thick original web is 2,330 pounds, which is less than 4,300 pounds. Thus, fasteners are bearing critical in original web (0.20 thick). The number of fasteners required in constant section is 33,526/2,330 = 14.39. Since the repair conservatively transfers the entire load in the constant section, use a minimum of 14 fasteners and space bewteen 3D and 5D.

Extruded Section Repair - Machined Tapered
Figure 2 (Sheet 8)

TAPERED SECTION:

Thickness at end of part = 1/3(0.20) = 0.067 per note [B] . Then length of tapered section for 20 to 1 taper ratio = (0.15 - 0.067)20 = 1.66 inches. Using 2D edge margin for end fastener and 2D from start of taper to first fastener in tapered section, distance remaining is 1.66 - 4D =1.66 - 4(0.1888) = 0.91 inch. One additional fastener would give

$$\frac{0.91}{2(0.188)} = 2.43D \text{ spacing (too close).}$$

So do not install the additional fastener. Then spacing =

$$\frac{0.91}{0.188} = 4.85D, \text{ which meets the 3 to 5 diameter spacing requirement.}$$

LOWER FLANGE

Required capability = $[(0.84 + 0.25) \times 0.25 - 0.25(0.25)]\ F_{tu}$
(using 1/4 diameter Hi-Loks)

$$= [\underbrace{(1.09) \times 0.25}_{\text{Area Calculation of Repair Flange}} - \underbrace{0.25}_{\text{Hole Size}}(\underbrace{0.25}_{\text{Repair Flange Thickness}})] \times \underbrace{61{,}000}_{\text{Ultimate Tensile Strength of 2024-T4 Extrusion}}$$

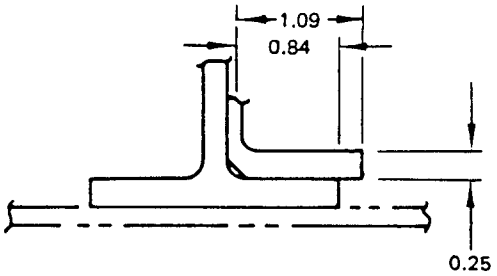

Required capability = 12,810 lbs.

CONSTANT SECTION:

For 1/4 diameter hi-loks, the fasteners are bearing critical in the 0.20 original flange. The bearing allowable is 3,790 pounds per fastener. The number of fasteners required in constant section is 12,810/3,790 = 3.38. Use a minimum of 4 fasteners and space between 3D and 5D. If there are existing 1/4 diameter fasteners, pick up 4. If fastener diameter differs, recalculate requirement.

Extruded Section Repair - Machined Tapered
Figure 2 (Sheet 9)

TAPERED SECTION:

Thickness at end of part = 1/3(0.20) = 0.067 per note [B]. Then length of tapered section for 20 to 1 taper ratio = (0.25 - 0.067)20 = 3.66 inches. Using 2D edge margin for end fastener and 2D from start of taper to first fastener in tapered section, distance remaining is 3.66 - 4D = 3.66 - 4(0.25) = 2.66 inches. Install additional fasteners in tapered section at 3 to 5 diameter spacing. Two additional would give

$\frac{2.66}{3(0.25)}$ = 3.55D spacing. If there are existing fasteners, make adjustments to end up with approximately same end thickness and taper ratio.

Extruded Section Repair - Machine Tapered
Figure 2 (Sheet 10)

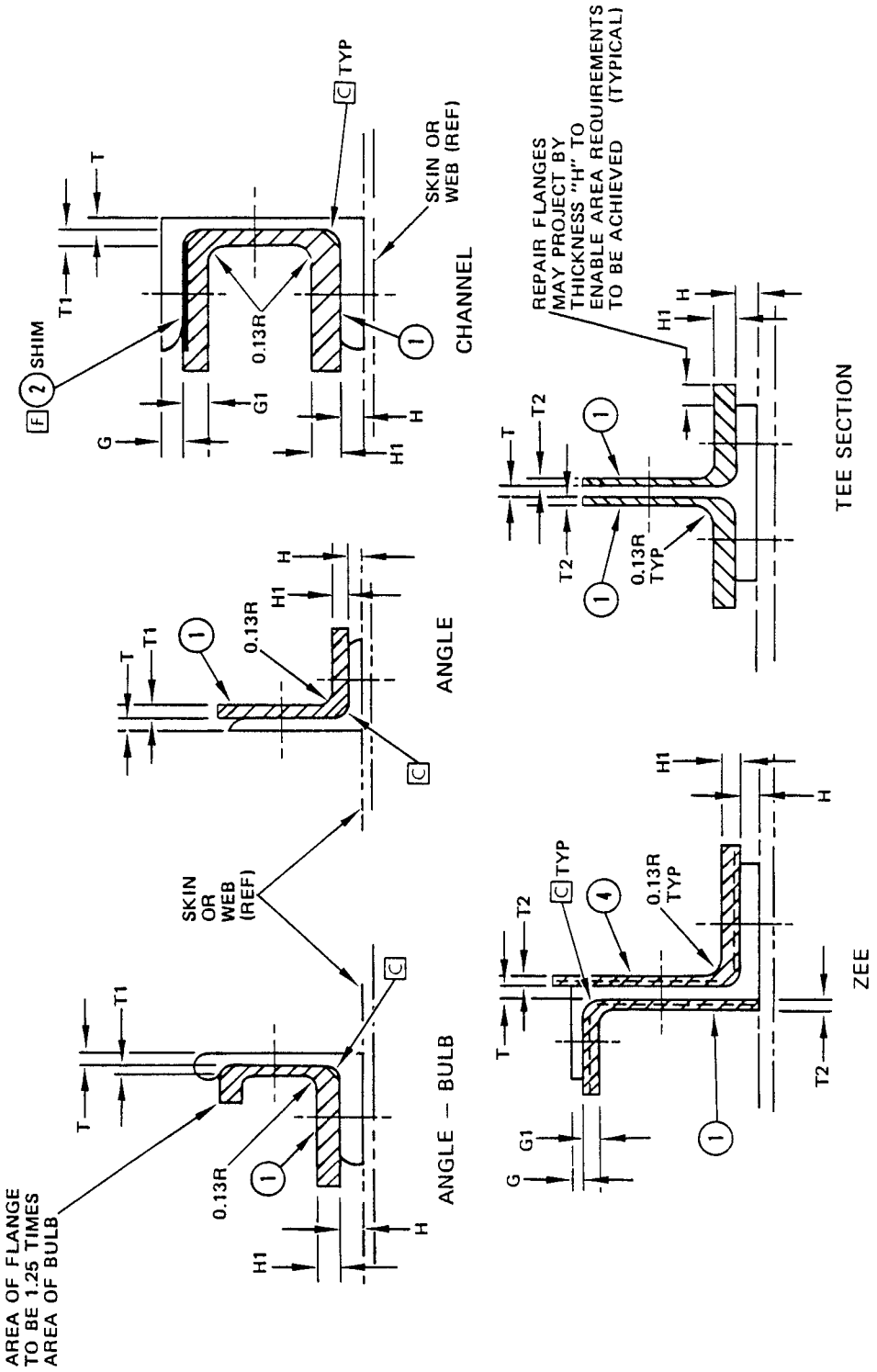

TYPICAL EXTRUDED SECTIONS

Extruded Section Repair - Machine Tapered
Figure 2 (Sheet 11)

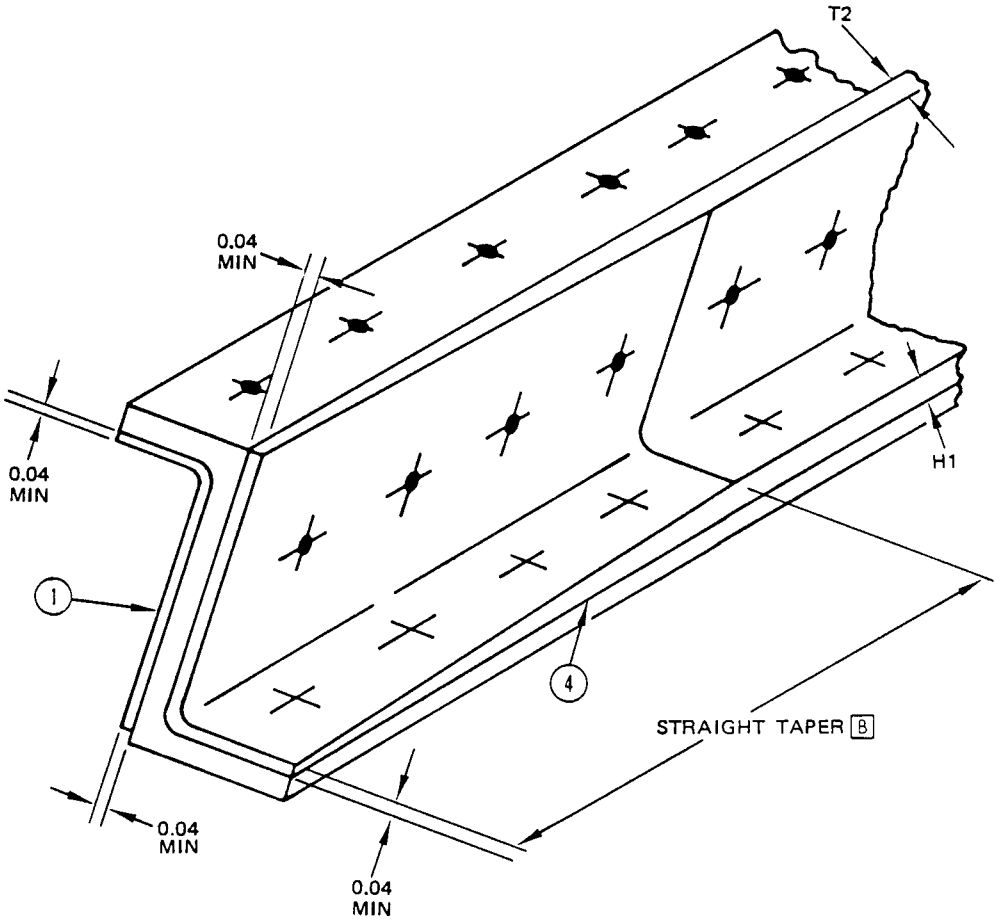

ISOMETRIC VIEW
OF REPAIR ANGLES
(TYPICAL FOR ALL SECTIONS)

SRM 51-40-5 HAS BEEN MOVED TO SRM 51-40-20.

BOEING PROPRIETARY - Copyright © - Unpublished Work - See title page for details.

ALLOWABLE DAMAGE DATA FOR ALUMINUM HONEYCOMB STRUCTURE

1. Applicability

This chapter-section-subject gives the allowable damage data for aircraft structure that is made from aluminum skin bonded to aluminum honeycomb core material.

NOTE: The allowable damage limits as given in this subject will not have an effect on a Structurally Significant Item (SSI) given in SRM 51-00-4, Fig. 3. Thus, no change to the Supplemental Structural Inspection Document (SSID) inspection program is necessary.

2. General Information about Allowable Damage to Aircraft Structure

A. Damage is defined as any visible change to the surface of an airplane part that is caused by deterioration, delamination, erosion, dents, gouges, scratches, punctures, or holes.

B. Spoilers, control surface tabs, wedge parts of the trailing edge of the wing are usually made from aluminum honeycomb laminate structure.

C. The aileron is the only balanced control surface that uses aluminum honeycomb core construction. If you plan to make a repair to the aileron and you plan to make the balance adjustment without its removal from the airplane, then refer to SRM 51-80-1.

NOTE: You must refer to SRM 51-80-1 before you start the damage cleanup or repair on the aileron so that you can meet the accuracy data specified in this chapter-section-subject.

In all cases, the effect of rework or repair on the aileron balance condition must be considered. Refer to SRM 51-80 and SRM 51-80-1 for aileron balance data.

D. Refer to Fig. 1 for the allowable damage limits that are permitted without a repair.

E. Refer to SRM 51-40-20 for the repair procedures on 250°F (121°C) cured metal bond parts.

F. Refer to SRM 51-10-1 for the applicable tools that you use on repairs given in this chapter-section-subject.

G. Refer to SRM 51-20-3 for the sources of nonmetallic repair materials.

BOEING PROPRIETARY - Copyright © - Unpublished Work - See title page for details.

H. Refer to SRM 51-70 for aerodynamic smoothness data.

CAUTION: REPAIRS MUST NOT COVER DRAIN HOLE LOCATIONS IN ALUMINUM PANELS. CORROSION WILL OCCUR IN THE REPAIR AREA, IF DRAIN HOLES ARE COVERED.

I. If the repair covers an initial drain hole, then drill through the repair are at the drain hole location.

NOTE: Drain holes are usually 0.375 inch (9.5 millimeters) in diameter. Refer to AMM 51-41-0.

BOEING PROPRIETARY - Copyright © - Unpublished Work - See title page for details.

NOTES

- MAINTAIN RECORDS OF THE LOCATION OF ALL UNREPAIRED DAMAGE. INSPECT FREQUENTLY AND PERFORM PERMANENT REPAIRS IMMEDIATELY AT ANY SIGN OF PROPAGATION.
- REFER TO MAXIMUM REPAIR LIMITS FOR EACH REPAIR ITEM.

[A] THESE RESTRICTIONS APPLY TO THOSE AREAS CONTAINED WITHIN THE BOUNDARY OF A 2-INCH STRIP AT THE PANEL EDGE, THE TRAILING EDGE AND AFT OF THE SPAR AND ALSO TO THE FORWARD EDGE PORTION BONDED TO THE SPAR.

[B] SMOOTH DENTS FREE FROM ABRASIONS, CRACKS AND DELAMINATION MAY REMAIN WITHOUT REWORK, PROVIDED THE LIMITS OF DETAIL VII ARE NOT EXCEEDED. THE DISTANCE BETWEEN ADJACENT DENTS MUST BE GREATER THAN 1/2 MAXIMUM OF THE LARGEST DENTED AREA.

[C] CHECK FOR DELAMINATION AROUND ALL DAMAGE, IN CRITICAL AREAS, AROUND FITTINGS AND AT THE SPARS. DISTANCE BETWEEN ADJACENT ALLOWABLE DELAMINATED AREAS MUST BE GREATER THAN 1/2 MAXIMUM DIMENSION OF THE LARGEST DELAMINATED AREA.

[D] SEE SRM 51-40-20 FOR REPAIRS FOR DAMAGED TRAILING EDGE STRUCTURES.

[E] AS AN INTERIM MEASURE, SEAL ALL DELAMINATED EDGES AGAINST CONTAMINATION AS REQUIRED BY SRM 51-40-20. REPLACE INTERIM REPAIR WITH A PERMANENT REPAIR WITHIN 150 SUBSEQUENT FLIGHT HOURS.

[F] AS AN INTERIM MEASURE, STOP DRILL ALL CRACKS AS GIVEN IN 51-10-1 AND SEAL WITH NO. 850 SCOTCH BRAND TAPE OR EQUIVALENT. REPLACE INTERIM REPAIR WITH A PERMANENT REPAIR WITHIN 150 SUBSEQUENT FLIGHT HOURS.

[G] AS AN INTERIM MEASURE TRIM SKIN AROUND HOLES TO A SMOOTH, REGULAR BOUNDARY AND SEAL AS REQUIRED BY NOTE [F]. REPLACE INTERIM REPAIR WITH A PERMANENT REPAIR WITHIN 150 SUBSEQUENT FLIGHT HOURS.

[H] CONTACT THE BOEING COMPANY FOR REPAIRS.

[J] SCRATCHES WITHIN THE LIMITS GIVEN DO NOT REQUIRE REWORK PROVIDED THAT NO TWO INTERSECT OR ARE WITHIN 1.50 INCHES OF A PANEL EDGE OR ATTACHMENT FITTINGS. SCRATCHES MAY BE ORIENTED IN ANY DIRECTION.

[K] CALCULATE THE EFFECT OF THE REPAIR TO THE AILERON - (WEIGHT OF MATERIAL REMOVED LESS THE WEIGHT OF THE SCOTCH-CAL TAPE ADDED TO SEAL THE HOLE) - DETERMINE THE EFFECT ON AILERON BALANCE AND CHECK THAT AILERON REWORK LIMITS OF 51-80-1 ARE NOT EXCEEDED.

[L] MAXIMUM DISTANCE MAY BE ORIENTED IN ANY DIRECTION. DAMAGE BOUNDARY MAY BE OF ANY SHAPE PROVIDED MAXIMUM DIMENSIONS ARE NOT EXCEEDED. CIRCULAR BOUNDARY USED TO INDICATE MAXIMUM DIMENSION OF DAMAGE.

[M] MINIMUM DISTANCE BETWEEN ANY DAMAGED AREA.

[N] AS AN INTERIM MEASURE, PROTECT THE DAMAGE FROM THE ENTRANCE OF WATER OR OTHER UNWANTED MATERIAL BY SEALING WITH ALUMINUM FOIL TAPE 3M-Y436 OR EQUIVALENT. RECORD THE LOCATION AND INSPECT AT EVERY "A" CHECK. REPAIR THE DAMAGE IN LESS THAN 150 SUBSEQUENT FLIGHT HOURS.

Damage Evaluation - Aluminum Honeycomb Structure
Figure 1 (Sheet 1)

BOEING PROPRIETARY - Copyright © - Unpublished Work - See title page for details.

NOTES (CONTINUED)

P DENTS ARE NOT PERMITTED ON THE WEDGE CHORDS AT THE FORWARD EDGE. IF THE DENT IS LESS THAN 2.0 INCHES FROM THE EDGE OF A PANEL, THE DENT MUST BE A DEPTH OF 0.040 INCH OR LESS. IF THE DENT IS 2.0 INCHES OR MORE FROM THE EDGE OF THE PANEL, THEN THE DENT MUST BE A DEPTH OF 0.120 INCH OR LESS. THE MINIMUM A/Y RATIO FOR ALL DENTS IS 10. THE MINIMUM DISTANCE BETWEEN ADJACENT EDGES OF DENTS OR OTHER DAMAGE IS 1.0 DIAMETER. DENTS LARGER THAN THESE ALLOWABLE LIMITS MUST BE FILLED AND MADE SMOOTH WITH BMS 5-28, TYPE 3 POTTING COMPOUND. REFER TO SRM 51-40-1. THE FILLED DAMAGE MUST BE INSPECTED AT EACH AIRPLANE "A" CHECK AND REPAIRED BY THE NEXT "C" CHECK. SEE DETAIL VII.

Q DAMAGE TO A MAXIMUM DIMENSION (D) OF 2.25 INCHES IS PERMITTED IN THE HONEYCOMB AREA. THE DAMAGE MUST BE A MINIMUM OF 4D EDGE TO EDGE FROM OTHER DAMAGE. THE DAMAGE MUST ALSO BE A MINIMUM OF 1.0 INCH FROM THE EDGE OF A PANEL. REPAIR A DELAMINATION IN THE HONEYCOMB AREA AS GIVEN IN SRM 51-70 AT OR BEFORE THE NEXT "C" CHECK.

Damage Evaluation - Aluminum Honeycomb Structure
Figure 1 (Sheet 2)

BOEING PROPRIETARY - Copyright © - Unpublished Work - See title page for details.

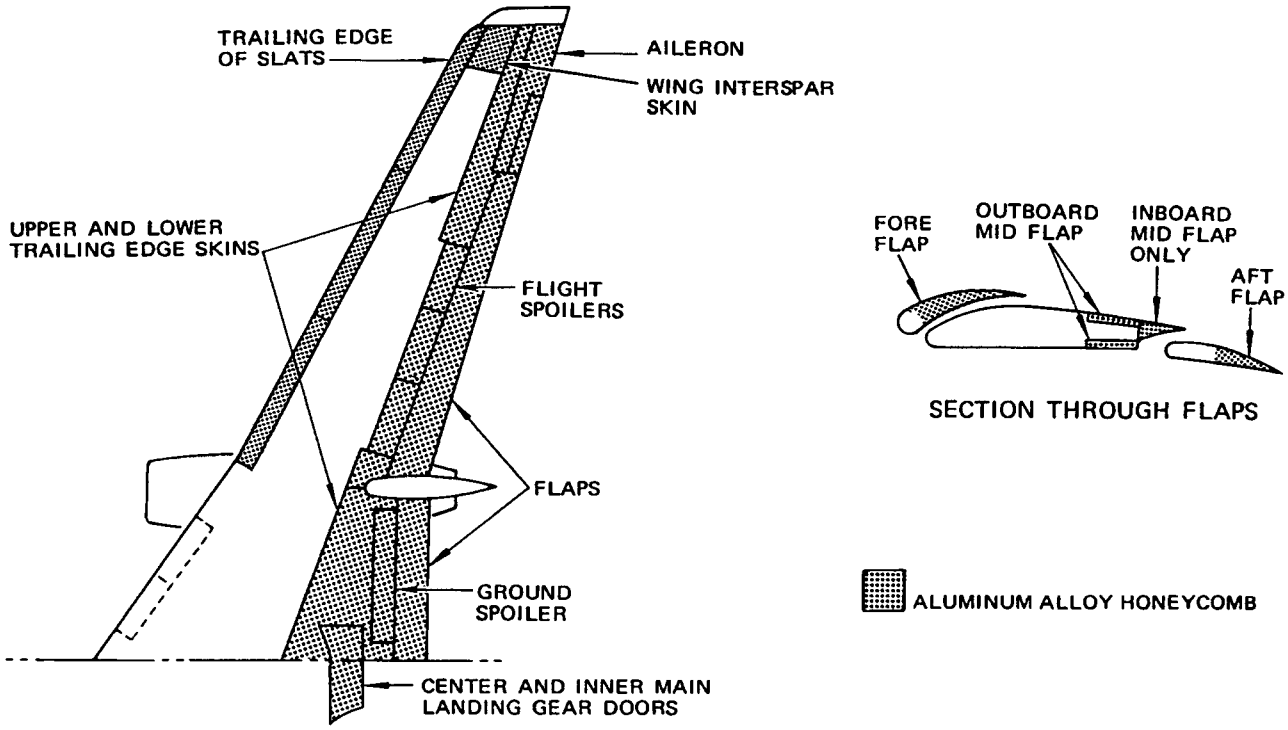

LOCATION OF ALUMINUM HONEYCOMB STRUCTURE

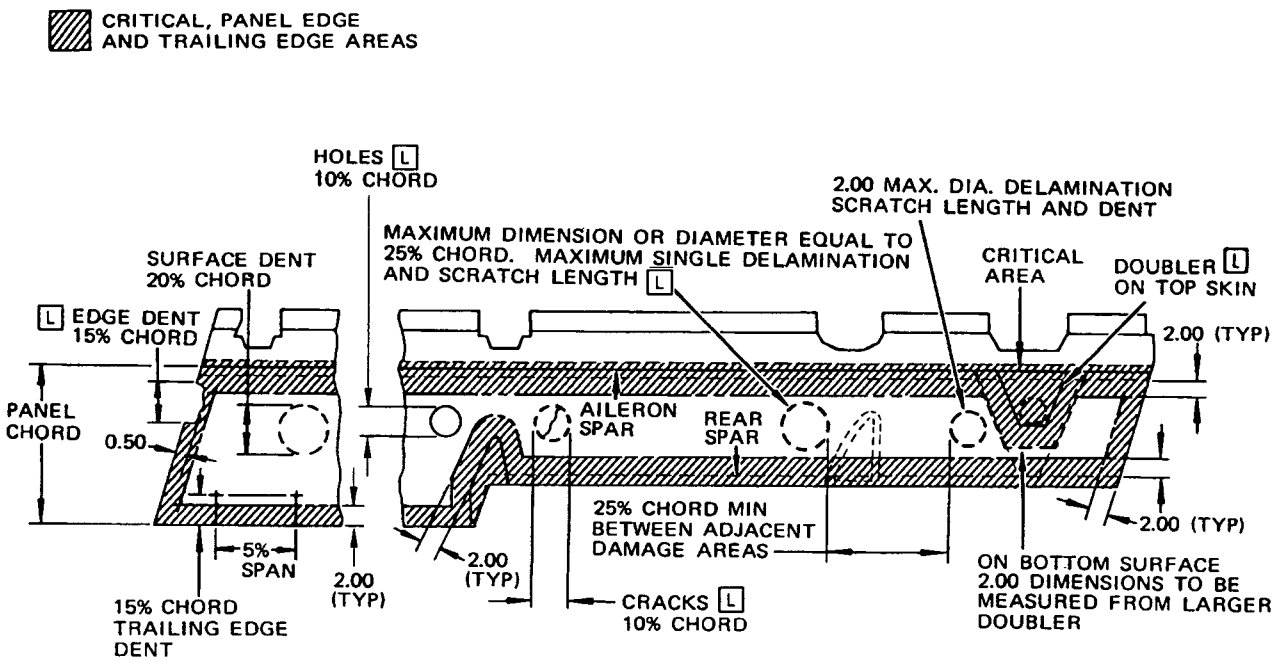

AILERON SKIN
DETAIL I

Damage Evaluation - Aluminum Honeycomb Structure
Figure 1 (Sheet 3)

BOEING PROPRIETARY - Copyright © - Unpublished Work - See title page for details.

TYPE OF DAMAGE	TRAILING EDGE [D]	PANEL EDGES	SURFACES	
			CRITICAL AREAS	NONCRITICAL AREAS
DENTS [B]	15% PANEL CHORD 5% SPAN SEE DETAIL IX	15% PANEL CHORD 0.5 INCH DEEP	AREA CONTAINED WITHIN A 2.00-INCH DIAMETER CIRCLE	20% PANEL CHORD 0.05-INCH DEEP SEE DETAIL VII
DELAMINATION [C]	NONE [A] SEE FIGURE 2 FOR SEALING REFER TO NOTE [E]	NONE [A] REFER TO NOTE [E]	AREA CONTAINED WITHIN A 2.00-INCH DIAMETER CIRCLE	MAXIMUM SIZE OF ANY SINGLE DELAMINATED AREA = 35 IN.^{2} 25% CHORD MAXIMUM DIMENSION IN ANY DIRECTION
SCRATCHES	NONE WITHIN 2.00 INCHES OF EDGES AND 1.50 INCHES OF FASTENERS [A]	NONE [A]	10% SKIN THICKNESS MAXIMUM LENGTH - 2.00 INCHES	25% SKIN THICKNESS 25% SKIN CHORD REFER TO NOTE [J]
CRACKS	NONE [A] REFER TO NOTE [F]	NONE [A] REFER TO NOTE [F]	NONE [H]	10% PANEL CHORD (MAXIMUM LENGTH) REFER TO NOTE [F]
HOLES [K]	NONE [A] REFER TO NOTE [G]	NONE [A] REFER TO NOTE [G]	NONE [H]	10% PANEL CHORD REFER TO NOTE [G]

NOTE: FOR REPAIRS, SEE SRM 51-40-20.

ALLOWABLE DAMAGE WITHOUT REPAIR - AILERON
TABLE I

MAXIMUM REPAIR LIMITS - AILERONS	
CRITICAL AREA	TOTAL OF REPAIRED AREAS NOT TO EXCEED 10% OF THE CRITICAL AREA
NONCRITICAL AREA	TOTAL OF REPAIRED AREAS NOT TO EXCEED 25% OF THE CRITICAL AREA
PANEL EDGES	CUMULATIVE LENGTH OF REPAIRS MUST NOT BE GREATER THAN 25% OF EDGE IN WHICH REPAIRS ARE LOCATED
TRAILING EDGE	CUMULATIVE LENGTH OF REPAIRS MUST NOT BE GREATER THAN 50% LENGTH OF THE PORTION OF TRAILING EDGE NOT ADJACENT TO THE TAB CUTOUT

NOTE: AILERON REPAIRS MUST BE MADE IN CONJUNCTION WITH THE REQUIREMENTS OF SRM 51-80-1.

TABLE II

Damage Evaluation - Aluminum Honeycomb Structure
Figure 1 (Sheet 3)

BOEING PROPRIETARY - Copyright © - Unpublished Work - See title page for details.

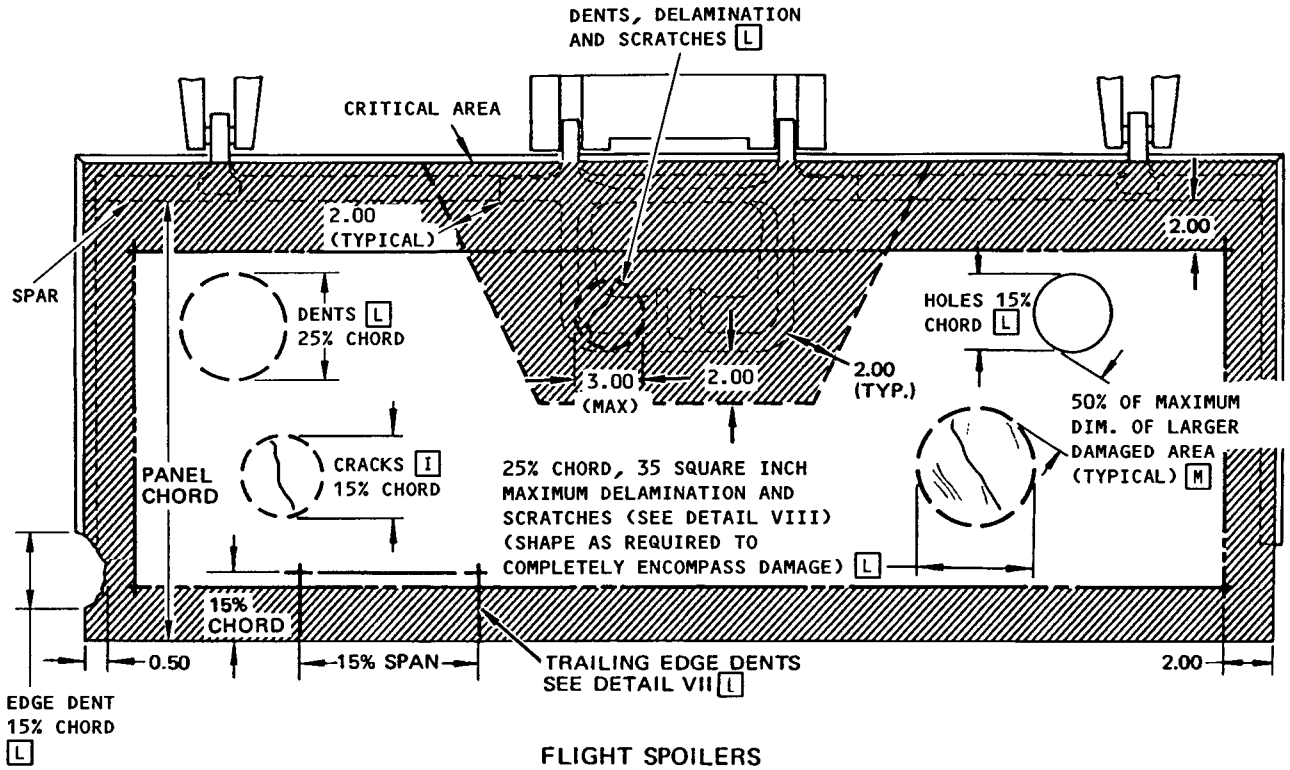

FLIGHT SPOILERS
DETAIL II

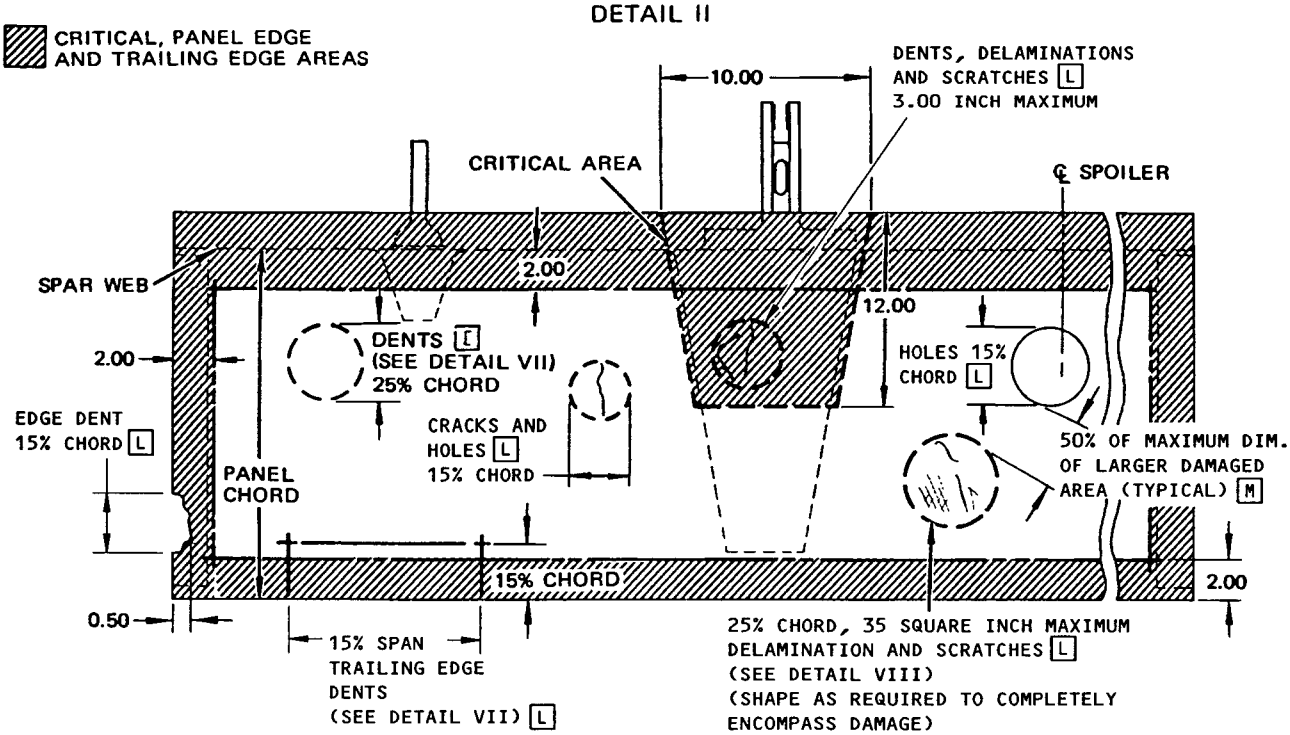

ONE-HALF OF SPOILER SHOWN
GROUND SPOILERS

DETAIL III
Damage Evaluation - Aluminum Honeycomb Structure
Figure 1 (Sheet 5)

BOEING PROPRIETARY - Copyright © - Unpublished Work - See title page for details.

TYPE OF DAMAGE	TRAILING EDGE [D]	PANEL EDGES	SURFACES	
			CRITICAL AREAS	NONCRITICAL AREAS
DENTS [B]	15% PANEL CHORD 15% SPAN SEE DETAIL IX [N]	15% PANEL CHORD 0.50 INCH DEEP [N]	AREA CONTAINED WITHIN A 3.00-INCH DIAMETER CIRCLE SEE DETAIL VII	25% PANEL CHORD 0.10-INCH DEEP SEE DETAIL VII
DELAMINATION [C]	NONE [A] SEE FIGURE 2 FOR SEALING REFER TO NOTE [E][N]	NONE [A] REFER TO NOTE [E][N]	AREA CONTAINED WITHIN A 3.00-INCH DIAMETER CIRCLE	MAXIMUM SIZE OF ANY SINGLE DELAMINATED AREA = 35 IN.^{2} 25% CHORD MAXIMUM DIMENSION IN ANY DIRECTION
SCRATCHES	NONE WITHIN 2.00 INCHES OF EDGES AND 1.50 INCHES OF FASTENERS	NONE WITHIN 2.00 INCHES OF EDGES AND 1.50 INCHES OF FASTENERS	15% SKIN THICKNESS MAXIMUM LENGTH - 3.00 INCHES	25% SKIN THICKNESS 25% SKIN CHORD REFER TO NOTE [J]
CRACKS	NONE [A] REFER TO NOTE [F]	NONE [A] REFER TO NOTE [F]	NONE [H]	15% PANEL CHORD (MAXIMUM LENGTH) REFER TO NOTE [F]
HOLES	NONE [A] REFER TO NOTE [G]	NONE [A] REFER TO NOTE [G]	NONE [H]	15% PANEL CHORD REFER TO NOTE [G]

NOTE: FOR REPAIRS, SEE SRM 51-40-20

ALLOWABLE DAMAGE WITHOUT REPAIR - FLIGHT AND GROUND SPOILERS
TABLE III

MAXIMUM REPAIR LIMITS - FLIGHT & GROUND SPOILERS	
CRITICAL AREA	TOTAL OF REPAIRED AREAS NOT TO EXCEED 10% OF THE CRITICAL AREA
NONCRITICAL AREA	TOTAL OF REPAIRED AREAS NOT TO EXCEED 50% OF THE NONCRITICAL AREA
PANEL EDGES	CUMULATIVE LENGTH OF REPAIRS MUST NOT BE GREATER THAN 30% LENGTH OF EDGE IN WHICH THE REPAIRS ARE LOCATED
TRAILING EDGE	CUMULATIVE LENGTH OF REPAIRS MUST NOT BE GREATER THAN 50% LENGTH OF THE TRAILING EDGE

TABLE IV

Damage Evaluation - Aluminum Honeycomb Structure
Figure 1 (Sheet 6)

BOEING PROPRIETARY - Copyright © - Unpublished Work - See title page for details.

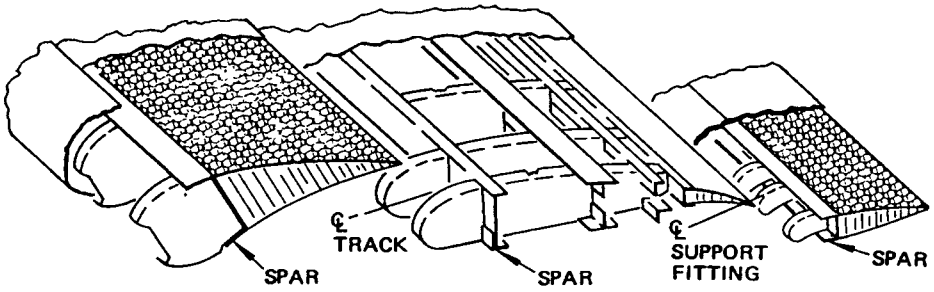

TYPICAL SECTION - WING TRAILING EDGE FLAPS

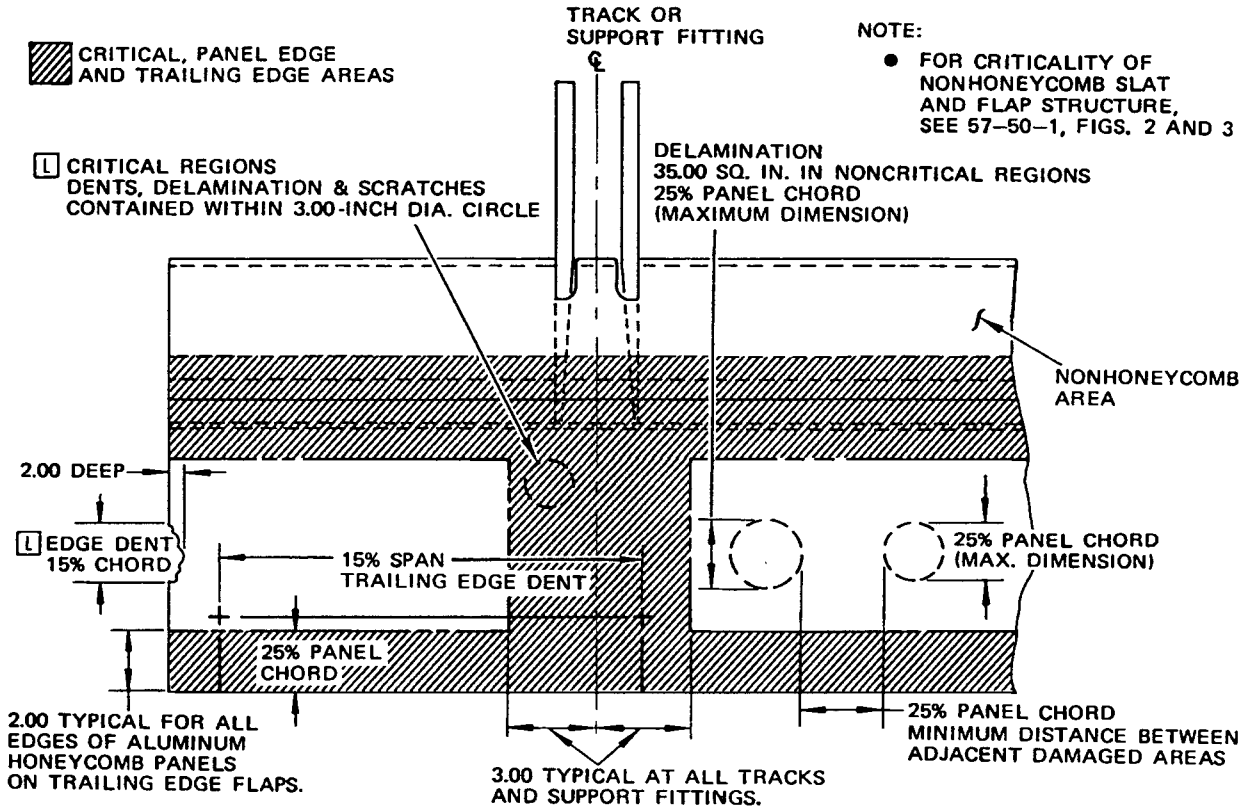

TRAILING EDGE FLAP SKIN (ALSO TYPICAL OF SLATS)
DETAIL IV

MAXIMUM REPAIR LIMITS - FLAPS AND SLATS	
CRITICAL AREA	TOTAL OF REPAIRED AREA NOT TO EXCEED 10% OF THE CRITICAL AREA
NONCRITICAL AREA	TOTAL REPAIRED AREA NOT TO EXCEED 50% OF NONCRITICAL AREA
PANEL EDGE	CUMULATIVE LENGTH OF REPAIRS MUST NOT EXCEED 30% OF PANEL EDGE IN WHICH THE REPAIRS ARE LOCATED
TRAILING EDGE	CUMULATIVE LENGTH OF REPAIRS NOT TO EXCEED 50% LENGTH OF THE TRAILING EDGE

TABLE V

Damage Evaluation - Aluminum Honeycomb Structure
Figure 1 (Sheet 7)

BOEING PROPRIETARY - Copyright © - Unpublished Work - See title page for details.

TYPE OF DAMAGE	TRAILING EDGE [D]	PANEL EDGES	SURFACES	
			CRITICAL AREAS	NONCRITICAL AREAS
DENTS [B]	25% PANEL CHORD 15% SPAN SEE DETAIL IX	15% PANEL CHORD 2.0 INCH DEEP	AREA CONTAINED WITHIN A 3.00-INCH DIAMETER CIRCLE	25% PANEL CHORD 0.10-INCH DEEP SEE DETAIL VII
DELAMINATION [C]	NONE [A] SEE FIGURE 2 FOR SEALING REFER TO NOTE [E]	NONE [A] REFER TO NOTE [E]	AREA CONTAINED WITHIN A 3.00-INCH DIAMETER CIRCLE	MAX. SIZE OF ANY SINGLE DELAMINATED AREA = 35 IN. 25% CHORD MAX. DIM. IN ANY DIRECTION.
SCRATCHES	NONE WITHIN 2.00 INCHES OF EDGES AND 1.50 INCHES OF FASTENERS	NONE WITHIN 2.00 INCHES OF EDGE AND 1.50 INCHES OF FASTENERS	15% SKIN THICKNESS MAX. LENGTH - 2.00 INCHES	25% SKIN THICKNESS 25% SKIN CHORD REFER TO NOTE [J]
CRACKS	NONE [A] REFER TO NOTE [F]	NONE [A] REFER TO NOTE [F]	NONE [H]	15% PANEL CHORD (MAXIMUM LENGTH) REFER TO NOTE [F]
HOLES	NONE [A] REFER TO NOTE [G]	NONE [A] REFER TO NOTE [G]	NONE [H]	15% PANEL CHORD REFER TO NOTE [G]

NOTES:
- FOR REPAIRS, SEE SRM 51-40-20.
- FOR CRITICALITY OF NONHONEYCOMB FLAP STRUCTURE, SEE 57-50-1, FIGURE 3

ALLOWABLE DAMAGE WITHOUT REPAIR - FLAPS
TABLE VI

TYPE OF DAMAGE	TRAILING EDGE [D]	PANEL EDGES	SURFACES	
			CRITICAL AREAS	NONCRITICAL AREAS
DENTS [P]	15% PANEL CHORD 15% SPAN SEE DETAIL IX	15% PANEL CHORD 0.50 INCH DEEP	AREA CONTAINED WITHIN A 3.0-INCH DIAMETER CIRCLE	25% PANEL CHORD 0.10-INCH DEEP SEE DETAIL VII
DELAMINATION [Q]	NONE [A] SEE FIGURE 2 FOR SEALING REFER TO NOTE [E]	NONE [A] REFER TO NOTE [E]	REFER TO NOTE [Q]	REFER TO NOTE [Q]
SCRATCHES	NONE WITHIN 2.00 INCHES OF EDGES AND 1.50 INCHES OF FASTENERS	NONE WITHIN 2.00 INCHES OF EDGE AND 1.50 INCHES OF FASTENERS	15% SKIN THICKNESS MAX. LENGTH - 3.00 INCHES	25% SKIN THICKNESS 25% SKIN CHORD REFER TO NOTE [J]
CRACKS	NONE [A] REFER TO NOTE [F]	NONE [A] REFER TO NOTE [F]	NONE [H]	15% PANEL CHORD (MAXIMUM LENGTH) REFER TO NOTE [F]
HOLES	NONE [A] REFER TO NOTE [G]	NONE [A] REFER TO NOTE [G]	NONE [H]	15% PANEL CHORD REFER TO NOTE [G]

NOTES:
- FOR PERMANENT REPAIRS, SEE SRM 51-40-20
- FOR CRITICALITY OF NONHONEYCOMB SLAT STRUCTURE, SEE 57-50-1, FIGURE 2

ALLOWABLE DAMAGE WITHOUT REPAIR - SLATS
TABLE VII

Damage Evaluation - Aluminum Honeycomb Structure
Figure 1 (Sheet 8)

BOEING PROPRIETARY - Copyright © - Unpublished Work - See title page for details.

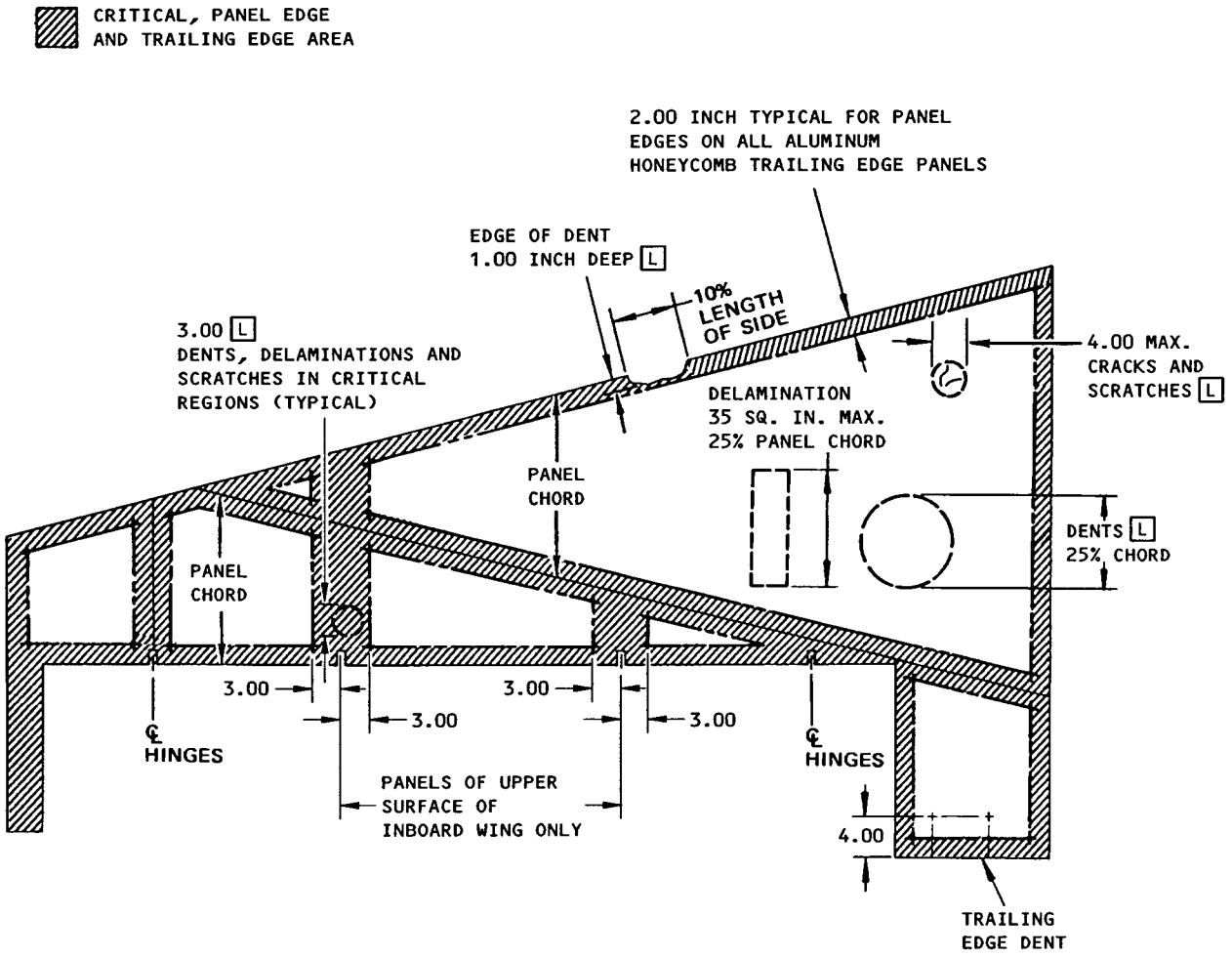

DIAGRAM TYPICAL FOR ALL PANELS

WING TRAILING EDGE PANELS
DETAIL V

Damage Evaluation - Aluminum Honeycomb Structure
Figure 1 (Sheet 9)

BOEING PROPRIETARY - Copyright © - Unpublished Work - See title page for details.

TYPE OF DAMAGE	TRAILING EDGE [D]	PANEL EDGES	SURFACES	
			CRITICAL AREAS	NONCRITICAL AREAS
DENTS [B]	15% PANEL CHORD 15% SPAN SEE DETAIL IX	10% LENGTH OF SIDE 1.00 INCH DEEP	AREA CONTAINED WITHIN A 3.00-INCH DIAMETER CIRCLE	25% PANEL CHORD 0.10-INCH DEEP SEE DETAIL VII
DELAMINATION [C]	NONE [A] SEE FIGURE 2 FOR SEALING REFER TO NOTE [E]	NONE [A] REFER TO NOTE [E]	AREA CONTAINED WITHIN A 3.00-INCH DIAMETER CIRCLE	MAXIMUM SIZE OF ANY SINGLE DELAMINATED AREA = 35 IN.^{2} 25% CHORD MAXIMUM DIMENSION IN ANY DIRECTION
SCRATCHES	NONE	NONE	15% SKIN THICKNESS MAXIMUM LENGTH - 3.00 INCHES	25% SKIN THICKNESS 25% SKIN CHORD REFER TO NOTE [J]
CRACKS	NONE [A] REFER TO NOTE [F]	NONE [A] REFER TO NOTE [F]	NONE [H]	15% PANEL CHORD (MAXIMUM LENGTH 4.00 INCH) REFER TO NOTE [F]
HOLES	NONE [A] REFER TO NOTE [G]	NONE [A] REFER TO NOTE [G]	NONE [H]	15% PANEL CHORD (MAXIMUM LENGTH 4.00 INCH) REFER TO NOTE [G]

NOTE: FOR REPAIRS, SEE SRM 51-40-20

ALLOWABLE DAMAGE WITHOUT REPAIR - WING TRAILING EDGE PANELS
TABLE VIII

MAXIMUM REPAIR LIMITS - WING TRAILING EDGE PANELS	
CRITICAL AREA	TOTAL OF REPAIRED AREAS NOT TO EXCEED 10% OF THE CRITICAL AREA
NONCRITICAL AREA	TOTAL OF REPAIRED AREAS NOT TO EXCEED 50% OF THE NONCRITICAL AREA
PANEL EDGES	CUMULATIVE LENGTH OF REPAIRS NOT TO EXCEED 25% OF PANEL EDGE IN WHICH REPAIRS ARE LOCATED
TRAILING EDGE	CUMULATIVE LENGTH OF REPAIRS NOT TO EXCEED 25% OF APPLICABLE SECTION OF TRAILING EDGE

TABLE IX

Damage Evaluation - Aluminum Honeycomb Structure
Figure 1 (Sheet 10)

BOEING PROPRIETARY - Copyright © - Unpublished Work - See title page for details.

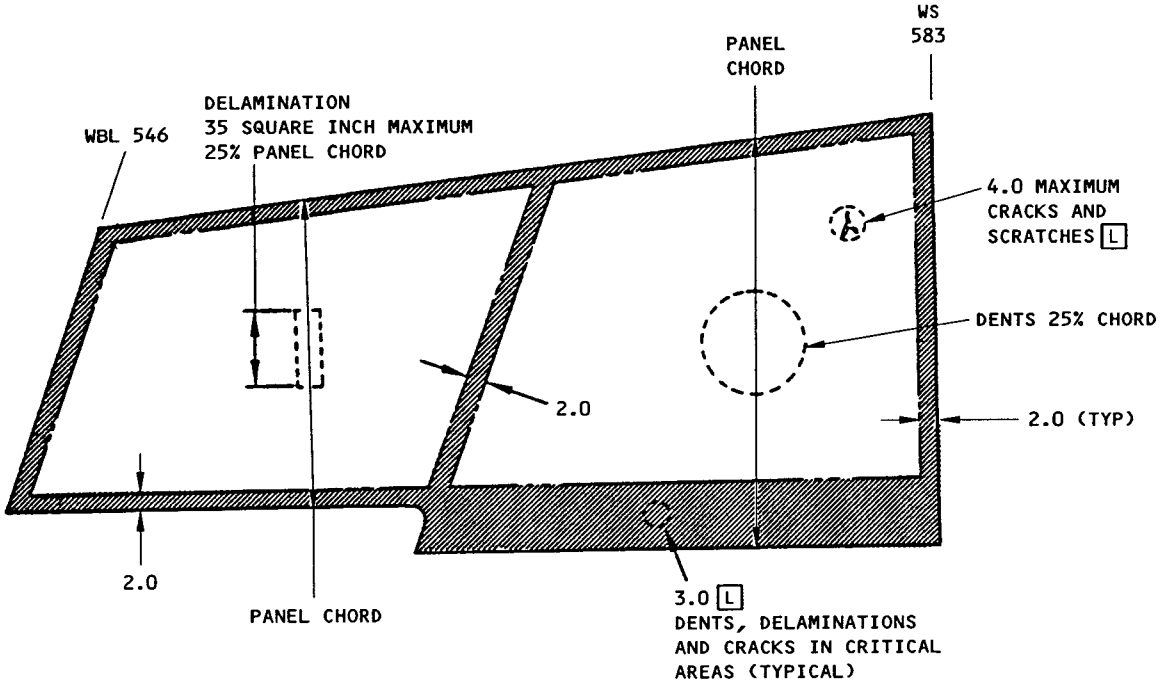

UPPER SKIN

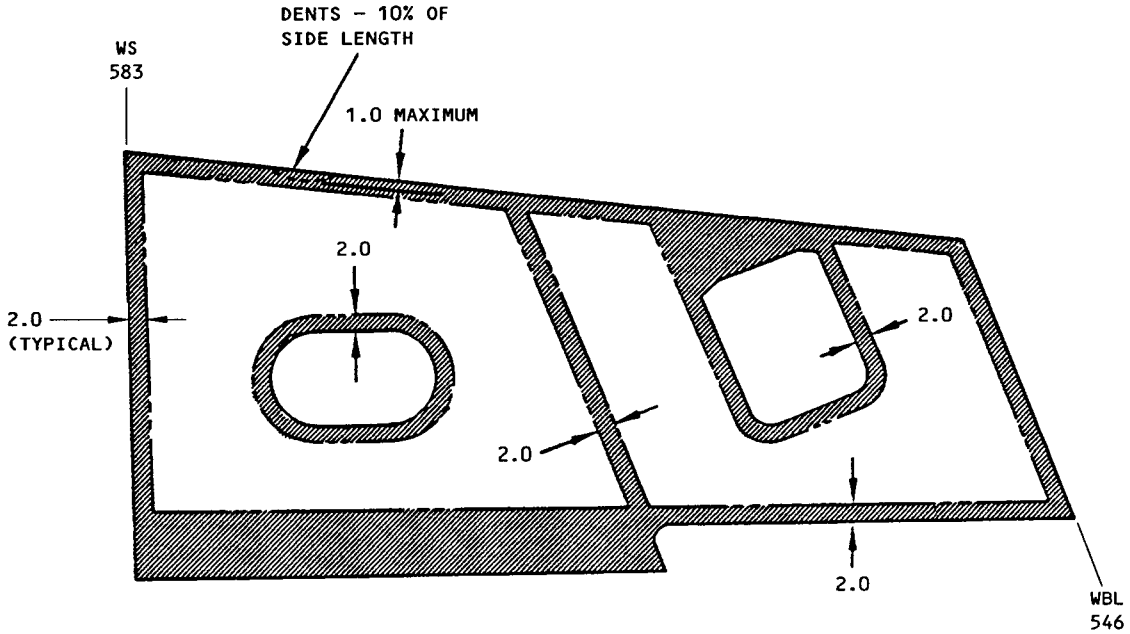

LOWER SKIN

WING OUTBOARD INSPAR PANELS
DETAIL VI

CRITICAL PANEL EDGE
AND ATTACHMENT AREA

Damage Evaluation - Aluminum Honeycomb Structure
Figure 1 (Sheet 11)

BOEING PROPRIETARY - Copyright © - Unpublished Work - See title page for details.

TYPE OF DAMAGE	PANEL EDGES	SURFACES	
		CRITICAL AREAS	NONCRITICAL AREAS
DENTS [B]	10% LENGTH OF SIDE, 1.00 INCH DEEP	AREA CONTAINED WITHIN A 3.00-INCH DIAMETER CIRCLE	25% OF PANEL CHORD 0.10-INCH DEEP SEE DETAIL VII
DELAMINATION [C]	NONE REFER TO NOTE [E]	AREA CONTAINED WITHIN A 3.00-INCH DIAMETER CIRCLE	MAXIMUM SIZE OF ANY SINGLE DELAMINATED AREA = 35 INCHES^2 25% CHORD MAXIMUM DIMENSION IN ANY DIRECTION
SCRATCHES	NONE	15% SKIN THICKNESS MAXIMUM LENGTH - 3.00 INCHES	25% SKIN THICKNESS 25% PANEL CHORD REFER TO NOTE [J]
CRACKS	NONE	NONE [H]	15% OF PANEL CHORD (MAXIMUM LENGTH 4.00 INCHES) REFER TO NOTE [F]
HOLES	NONE	NONE [H]	15% OF PANEL CHORD (MAXIMUM LENGTH 4.00 INCHES) REFER TO NOTE [G]

NOTE: FOR REPAIRS, SEE 51-40-20.

ALLOWABLE DAMAGE WITHOUT REPAIR - WING INSPAR SKIN
TABLE X

MAXIMUM REPAIR LIMITS - WING INSPAR SKIN	
CRITICAL AREA	TOTAL OF REPAIRED AREAS NOT TO EXCEED 10% OF THE CRITICAL AREA
NONCRITICAL AREA	TOTAL OF REPAIRED AREAS NOT TO EXCEED 50% OF THE NONCRITICAL AREA
PANEL EDGES	CUMULATIVE LENGTH OF REPAIRS NOT TO EXCEED 25% OF PANEL EDGE IN WHICH REPAIRS ARE LOCATED

TABLE XI

Damage Evaluation - Aluminum Honeycomb Structure
Figure 1 (Sheet 12)

BOEING PROPRIETARY - Copyright © - Unpublished Work - See title page for details.

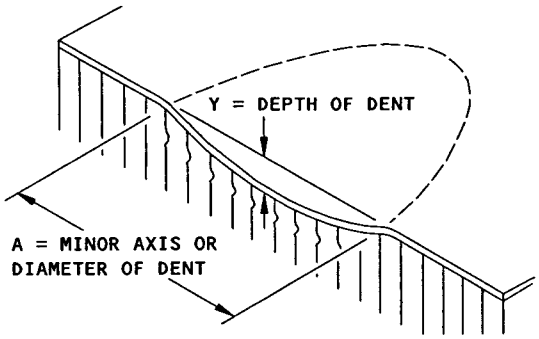

$\frac{A}{Y}$ VALUE MUST NOT BE LESS THAN 30 IN ALL AREAS EXCEPT HONEYCOMB AREA OF SLAT, AILERONS, SPOILERS AND TRAILING EDGE FLAPS, WHERE A/Y VALUE MUST NOT BE LESS THAN 10

PROFILE OF PERMISSIBLE DENTS
DETAIL VII

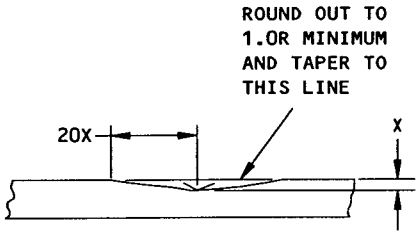

NOTE: CHECK FOR CRACKS FOLLOWING BLEND OUT OPERATION.

PROFILE OF BLENDED OUT SCRATCHES
DETAIL VIII

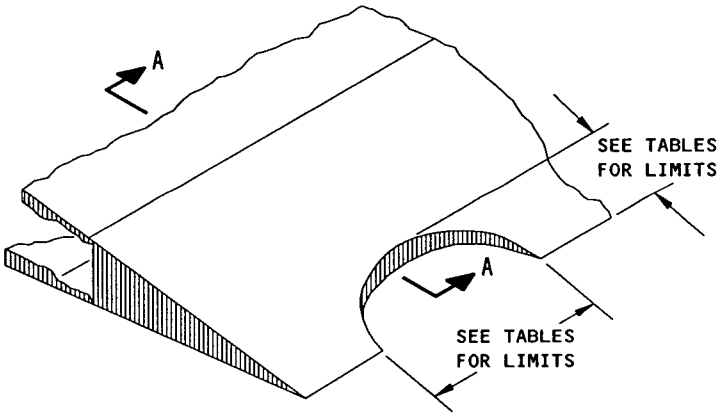

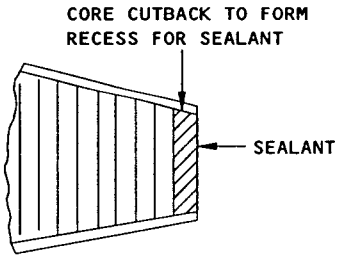

SECTION A-A

NOTE: CLEAN UP DAMAGE TO A REGULAR SHAPE AND SEAL THE EXPOSED HONEYCOMB CORE. USE POTTING COMPOUND DESCRIBED IN SRM 51-40-20.

ALLOWABLE DAMAGE WITHOUT REPAIR - TRAILING EDGE STRUCTURE
DETAIL IX

Damage Evaluation - Aluminum Honeycomb Structure
Figure 1 (Sheet 13)

BOEING PROPRIETARY - Copyright © - Unpublished Work - See title page for details.

SRM 51-40-6, FIGURES 2 THROUGH 23 HAVE BEEN REMOVED. REFER TO SRM 51-40-20 FOR ALUMINUM HONEYCOMB REPAIR PROCEDURES.

BOEING PROPRIETARY - Copyright © - Unpublished Work - See title page for details.

1. Typical Mat Molded Fiberglass Repairs

A. This subject of the manual describes repairs to fiberglass mat reinforced plastic. Repairs to fiberglass cloth reinforced plastic are described in SRM 51-40-9.

NOTE: These repairs will not have an effect on a Structurally Significant Item (SSI) given in SRM 51-00-4, Fig. 3. Thus, no change to the Supplemental Structural Inspection Document (SSID) inspection program is necessary.

B. Mat molded fiberglass (BMS 8-199) is used in applications involving electrical equipment on the airplanes. In general, mat molded fiberglass is used in nonstructural applications such as relay shields and junction boxes. Typical items made of mat molded fiberglass in most airplanes are the main ac power shield and pilot's lightshield in the control cabin.

C. Evaluate damage per table 1 below:

Type of Damage	Minor Damage (Inches)	Major Damage (Inches)
Holes	Up to 0.38 dia	Over 0.38 dia
Edge Cracks	Up to 0.75 long	Over 0.75 long
Inboard Cracks	Up to 2.00 long	Over 2.00 long

TABLE 1 - DAMAGE EVALUATION

D. Select applicable resin mixture from Fig. 1.

E. Refer to SRM 51-20-3 for sources of nonmetallic repair materials.

F. Prepare damage area. See Fig 3.

(1) Stop drill 1/16 to 3/16 inch diameter at ends of cracks.

(2) Bevel area around cracks or holes at 15 to 45 degrees.

(3) Sand entire damage area and approximately 0.50 inch beyond bevel edges.

(4) Solvent clean damage areas.

(a) Apply solvent with clean absorbent cleaner.

(b) Scrub with clean fiber brush, if necessary.

BOEING PROPRIETARY - Copyright © - Unpublished Work - See title page for details.

(c) Wipe off solvent before it evaporates with clean absorbent cleaner.

WARNING: ACETONE AND METHYL-ETHYL-KETONE SOLVENTS ARE TOXIC AND AN EXTREME FIRE HAZARD. DO NOT USE THIS MATERIAL IN CONFINED AREAS WITHOUT VENTILATION. WEAR NEOPRENE GLOVES FOR PROTECTION OF HANDS.

NOTE: Keep prepared area clean; contamination by paint, oil, grease, wax, dirt or dust reduces repair strength.

G. Mix selected resin mixture per figure 1.

H. Repair damage. See figure 3.

(1) Fill damage area with applicable resin mixture with a putty knife or wooden spatula.

(2) Cover repair area with parting film extending 1.00 to 2.00 over bevel edges.

NOTE: Use PE (polyethylene) parting film only when room temperature cure resin mixtures are used. PVA (polyvinyl alcohol) parting film is water soluble and easier to remove after curing high temperature cure resin mixtures.

(3) Remove excess resin with a wooden spatula or squeegee.

(4) Cure repair area.

(a) Cure for approximately 4 hours at 75 degrees or until tack free if room temperature cure resin mixture is used.

(b) Cure for 30 minutes at 225°F or 15 minutes at 275°F if high temperature cure resin mixture is used.

NOTE: Explosion-proof device delivering hot air is the preferred heat source.

NOTE: Use Tempilsticks for controlling repair area temperature if high temperature cure resin mixture is used.

(5) Remove parting film.

(a) Peel off parting film if polyethylene (PE) material is used.

(b) Sponge off with warm water at approximately 110°F to dissolve parting film if polyvinyl alcohol (PVA) material is used.

NOTE

USE EITHER ROOM OR HIGH TEMPERATURE CURE RESIN MIXTURE. USE OF HIGH TEMPERATURE CURE RESIN SAVES TIME PROVIDED EXPLOSION - PROOF HEAT SOURCE IS AVAILABLE

MIXTURES FOR MINOR DAMAGE REPAIR				
TYPE	INGREDIENTS	PTS BY WEIGHT	POT LIFE	CURE TIME
ROOM TEMP CURE RESIN	RESIN	100	30 TO 60 MINUTES	4 HRS AT 75°F or UNTIL TACK FREE
	FIRE INHIBITOR	5		
	LIQUID CATALYST	2		
	DRIER CATALYST	1/2		
HIGH TEMP CURE RESIN	RESIN	100	8 TO 10 HOURS	60 MINUTES AT 225°F 15 MINUTES AT 275°F
	FIRE INHIBITOR	5		
	LIQUID CATALYST	2		
	PASTE CATALYST	1/2		

MIXING PROCEDURES

1. Add fire inhibitor to resin and stir until fully mixed.

WARNING

FIRE INHIBITOR DUST OR FUMES ARE VERY TOXIC. DO NOT USE THIS MATERIAL IN CONFINED AREAS WITHOUT VENTILATION. WEAR NEOPRENE GLOVES FOR PROTECTION OF HANDS. FLUSH INSIDE OF UPPER AND LOWER EYELIDS WITH CLEAN WATER FOR AT LEAST 15 MINUTES TO REMOVE CONTAMINATION FROM EYES.

2. Add liquid catalyst and stir until fully mixed.

3. Add drier catalyst or paste catalyst and stir until fully mixed.

WARNING

DO NOT DIRECTLY MIX LIQUID CATALYST WITH DRIER CATALYST. THIS MIXTURE IS VIOLENTLY EXPLOSIVE.

Repair Mixtures and Mixing Procedures
Figure 1 (Sheet 1)

MIXTURES FOR MAJOR DAMAGE REPAIR				
TYPE	INGREDIENTS	PTS BY WEIGHT	POT LIFE	CURE TIME
ROOM TEMP CURE RESIN	RESIN	67	30 TO 60 MINUTES	4 HRS AT 75°F or UNTIL TACK FREE
	FIRE INHIBITOR	5		
	LIQUID CATALYST	2		
	DRIER CATALYST	1/2		
	FIBERGLASS MAT (0.50 SQUARES)	33		
HIGH TEMP CURE RESIN	RESIN	67	8 TO 10 HOURS	60 MINUTES AT 225°F 15 MINUTES AT 275°F
	FIRE INHIBITOR	5		
	LIQUID CATALYST	2		
	PASTE CATALYST	1/2		
	FIBERGLASS MAT (0.50 SQUARES)	33		

MIXING PROCEDURES

1. Add fire inhibitor to resin and stir until fully mixed.

WARNING

FIRE INHIBITOR DUST OR FUMES ARE VERY TOXIC. DO NOT USE THIS MATERIAL IN CONFINED AREAS WITHOUT VENTILATION. WEAR NEOPRENE GLOVES FOR PROTECTION OF HANDS. FLUSH INSIDE OF UPPER AND LOWER EYELIDS WITH CLEAN WATER FOR AT LEAST 15 MINUTES TO REMOVE CONTAMINATION FROM EYES.

2. Add liquid catalyst and stir until fully mixed.

3. Add drier catalyst or paste catalyst and stir until fully mixed.

WARNING

DO NOT DIRECTLY MIX LIQUID CATALYST WITH DRIER CATALYST. THIS MIXTURE IS VIOLENTLY EXPLOSIVE.

4. Add fiberglass mat and stir until fully mixed.

Repair Mixtures and Mixing Procedures
Figure 1 (Sheet 2)

Figure 2 deleted. See 51-20-3 for sources of nonmetallic repair materials.

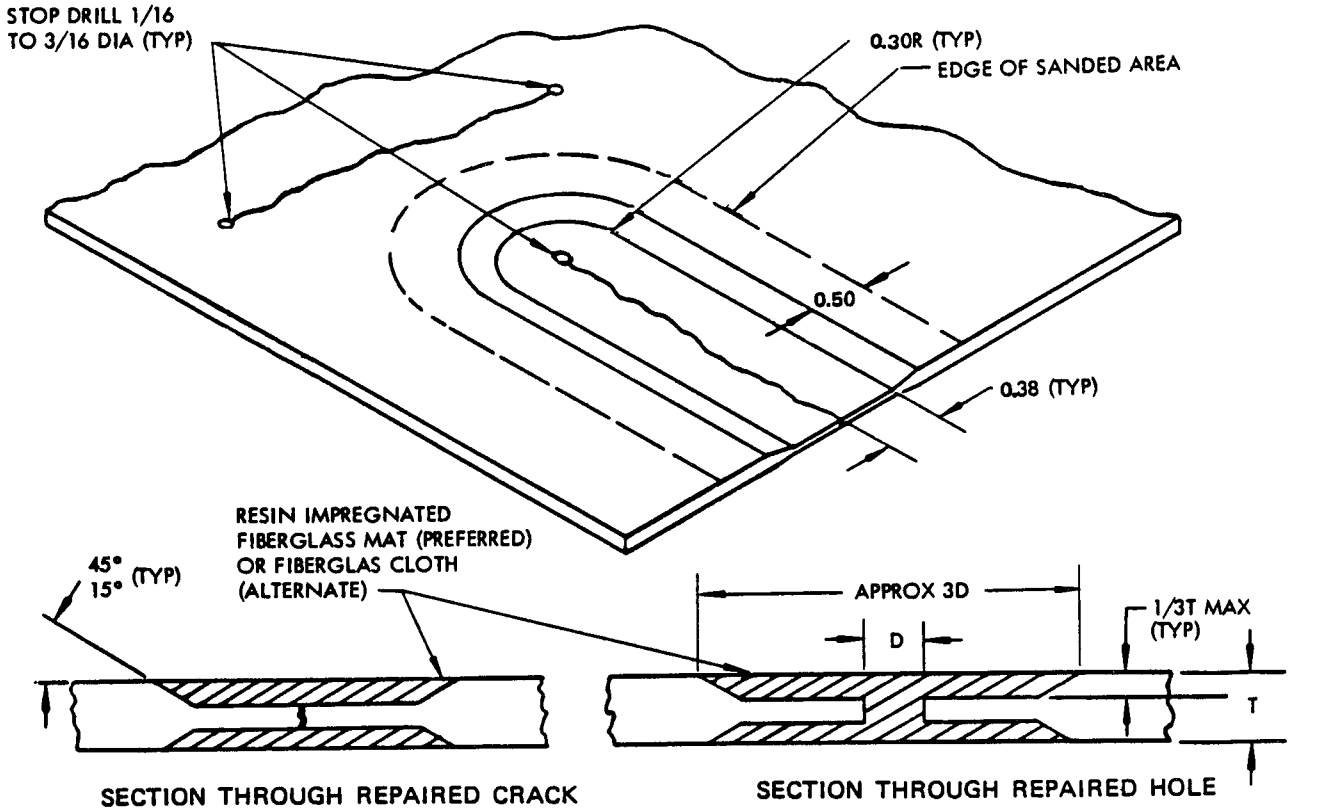

MAJOR DAMAGE

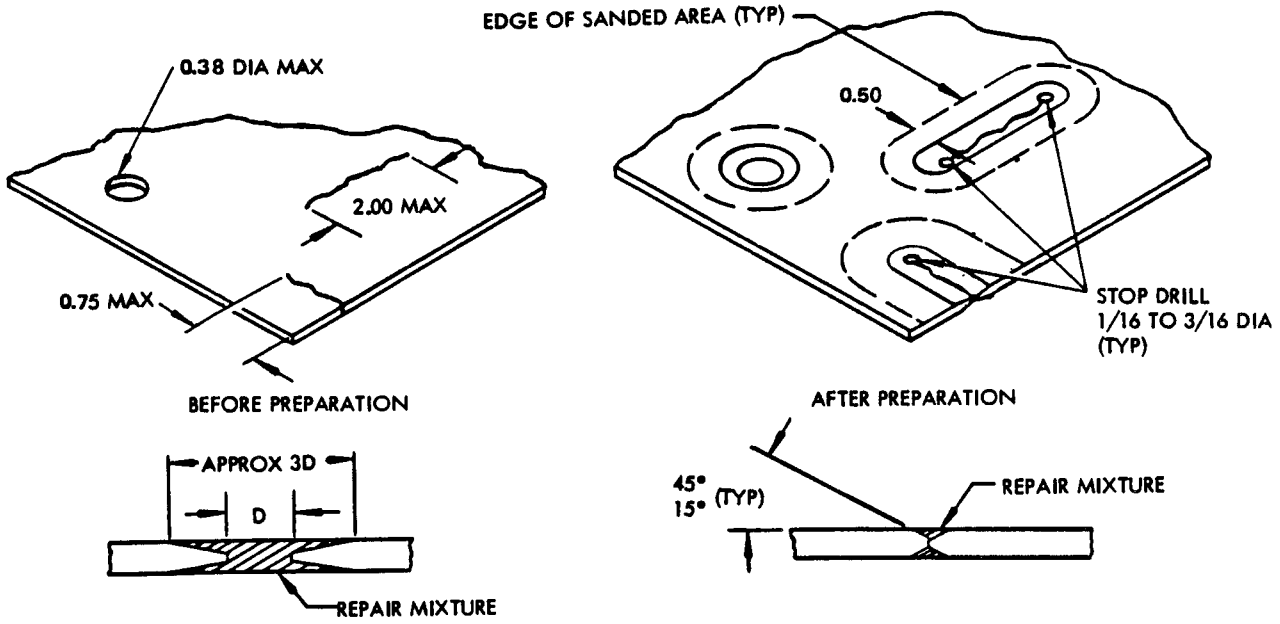

MINOR DAMAGE

Mat Molded Fiberglass Repair
Figure 3

REPAIRS TO NONSTRUCTURAL METAL COMPONENTS USING FIBERGLASS OVERLAYS

1. General

   A. These repairs will not have an effect on a Structurally Significant Item (SSI) given in SRM 51-00-4, Fig. 3. Thus, no change to the Supplemental Structural Inspection Document (SSID) inspection program is necessary.

   B. The repairs given in this subject are intended for use on nonstructural components and must not be used for the repair of primary structure.

   C. Refer to SRM 51-20-3 for the suppliers of materials used in this subject.

2. Preparation for Repair

   A. To ensure satisfactory adhesion of the fiberglass overlay a high standard of cleanliness must be maintained. The area to which the overlay is to be applied must be cleaned as follows:

      (1) Mask the surrounding area and remove the finish, using paint stripper.

      CAUTION: CHEMICAL PAINT STRIPPERS MAY ATTACK RESIN SYSTEMS, THEREFORE, SHOULD NOT BE USED TO REMOVE PAINT FOR DAMAGE EVALUATION OR MAKING REPAIRS.

      (2) Sand the surface of the metal lightly using Scotchbrite Type A (very fine) aluminum oxide pads.

      (3) Remove the sanding debris and clean the area with a clean lint-free cloth moistened with solvent, Series 88 (Ref AMM/SOPM 20-30-88). Repeat this cleaning operation with clean cloths until the lack of soil indicates that a clean surface has been obtained.

3. Primer Application

   A. Primer should be applied as soon after the final cleaning operation as possible. When a period of time has elapsed since the cleaning operation, the area should be wiped with a clean cloth moistened with solvent, Series 88 (Ref AMM/SOPM 20-30-88) before primer application. Apply the primer as follows:

      (1) Apply a thin continuous coat of EC776SR adhesive primer over the cleaned area with a clean soft brush.

      (2) Allow the primer to dry for 1 hour at room temperature (70°F) or 30 minutes at 130°F. Use an explosionproof heat source for accelerated drying and do not permit the temperature of the component to exceed 150°F

      (3) Take care that the newly primed surface does not become contaminated before the application of the fiberglass overlay.

BOEING PROPRIETARY - Copyright © - Unpublished Work - See title page for details.

4. Application of Fiberglass Overlay

A. Two layers of BMS 9-3, Type H-2 or H-3 fiberglass cloth overlapping the damage by a minimum of 1.50 inches, will be required to make the repair, as shown in Fig. 1.

NOTE: If BMS 9-3, Type H-2 or H-3 fiberglass cloth is not available, three plies of BMS 9-3, Type D, can be used in place of one ply of BMS 9-3, Type H-2 or H-3.

Proceed as follows:

(1) Cut a piece of fiberglass cloth of sufficient size to make the patches.

(2) Cut two pieces of PVA or other suitable parting film approximately 3 inches larger all around than the fiberglass cloth.

(3) Tape one piece of parting film to a smooth surface and coat it with BMS 5-126 adhesive prepared as shown in Fig. 2. The approximate weight of adhesive required is equal to the weight of the fiberglass cloth.

(4) Place the fiberglass cloth over the adhesive and place the remaining piece of parting film on top of it. Impregnate the cloth by using a squeegee or roller.

(5) Cut the repair plies to the desired size.

(6) Apply a thin coat of adhesive to the primed surface of the component.

(7) Remove the parting film from one side of the first ply. Apply the exposed side of the damaged panel and lightly squeegee over the remaining parting film to remove wrinkles and entrapped air. After installation, remove the top parting film.

(8) Apply the remaining plies in a similar manner to the first ply.

(9) Apply a clean piece of PVA parting film over the repair and lightly sweep the repair. Any exposed threads of the fiberglass cloth should be embedded in the fillet formed at the edge of the repair. Remove any excess resin before curing.

(10) Cure the repair according to curing times shown in table in Fig. 2. The cure may be accelerated by the application of heat (260°F maximum). The time for curing at 180°F is 1 hour, and it is not advisable to exceed this temperature due to possible distortion of the component.

(11) Remove the parting film after completion of cure.

5. Restoration of Finish

A. Remove any exposed EC776SR adhesive primer by wiping with a clean cloth moistened with solvent, Series 88 (Ref AMM/SOPM 20-30-88).

B. Restore finish as described in 51-21-0 of the 737 Maintenance Manual.

NOTES

- REFER TO TEXT FOR INSTRUCTIONS FOR REPAIR.

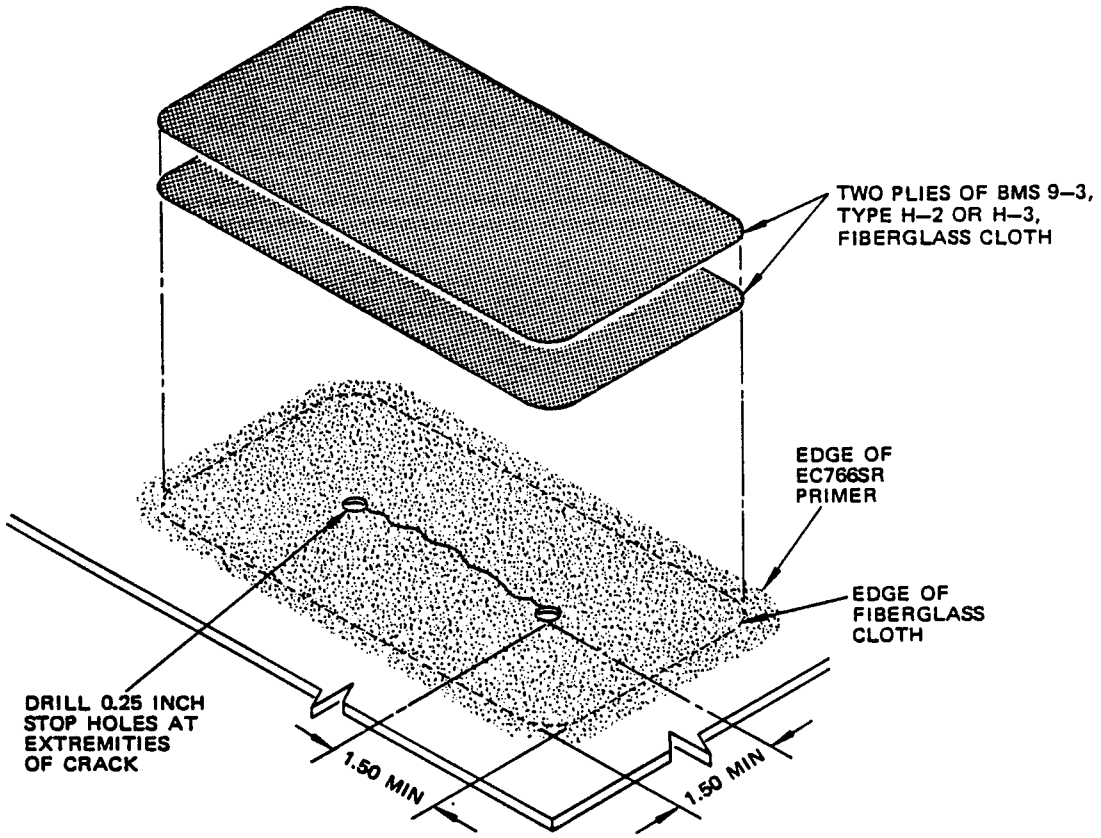

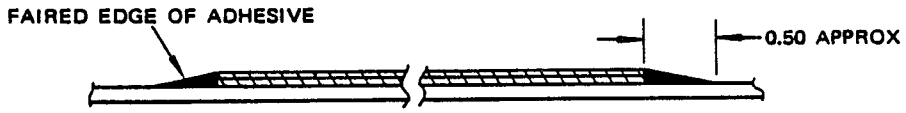

SECTION THROUGH REPAIR

Fiberglass Cloth Overlay Repair
Figure 1

BMS 5-126 (TYPE 2 CLASS 1) ADHESIVE FOR FIBERGLASS	
COMPONENT	PARTS BY WEIGHT.
A	100
B	100

CURE TIMES FOR BMS 5-126 (AT PRESSURE OF 10 TO 15 PSI)	
TEMPERATURE	TIME
70° ±5°F	24 ± 1 HOURS
100° ± 10°F	12 1/2 ± 1/2 HOURS
150° ± 10°F	3 1/2 ± 1/4 HOURS
250° ± 10°F	20 ± 5 MINUTES

BLENDING PROCEDURE

1. Mix component A thoroughly
2. Mix component B thoroughly
3. Thoroughly blend equal parts by weight of components A and B.

   NOTE: Mixture pot life is approximately 2 hours at 70°F.

   NOTES: REFER TO 51-20-3 FOR MATERIAL SOURCES

Preparation of Adhesive for Fiberglass
Figure 2

GLASS FABRIC REINFORCED EPOXY AND PHENOLIC LAMINATES REPAIR

1. General

A. This subject contains repairs to components made from epoxy and phenolic resin laminates reinforced with several layers of glass fabric. In some instances two laminated skins are separated by a plastic honeycomb core. Glass fabric is also known as fiberglass cloth.

NOTE: The allowable damage limits and repairs given in this subject will not have an effect on a Structurally Significant Item (SSI) given in SRM 51-00-4, Fig. 3. Thus, no change to the Supplemental Structural Inspection Document (SSID) inspection program is necessary.

B. Figure 1 shows the location of the principal external plastic parts of the airplane. Table 1 of Fig. 1 shows allowable damage and the applicability of repairs.

CAUTION: DO NOT USE CHEMICAL PAINT STRIPPERS TO REMOVE PAINT BEFORE MAKING DAMAGE EVALUATIONS. DAMAGE TO THE ADHESIVE RESIN SYSTEM WILL OCCUR.

C. Refer to par. 3. for the preparation of damage for repair of all assemblies with a honeycomb core.

D. Refer to par. 4. for the repair of assemblies with a honeycomb core using a resin with a normal curing period. This process is not suitable for the nose radome. Refer to SRM 53-50-4 for nose radome repairs.

E. Refer to par. 5. for repairs to nonelectronic components with a honeycomb core using a resin with a short curing period.

F. Refer to par. 6. for repairs using resin mix with an accelerated cure. These external repairs may only be carried out to nonelectronic components. They must be inspected periodically for deterioration, and should be replaced at the first opportunity with the repairs described in par. 4. or 5.

G. Refer to par. 7. for repairs to components made from glass fabric reinforced epoxy resin without a honeycomb core.

H. Refer to par. 8. and 9. for repairs to the flame sprayed aluminum coating applied to some components during manufacture. Paragraph 8. describes a resin scheme to provide partial conductivity, while full conductivity may be restored by flame spraying as described in par. 9.

I. Refer to par. 10. for the repair of the Tedlar coating applied to some components during manufacture.

J. Refer to SRM 53-50-4 for repairs to radomes.

BOEING PROPRIETARY - Copyright © - Unpublished Work - See title page for details.

K. Boeing approved repair facilities for glass fabric reinforced epoxy resin components are as follows. Those indicated with an asterisk are not approved for aluminum flame spraying.

Goodyear Aerospace Corp.
Arizonia Division
P.O. Box 85
Litchfield Park, Arizona 85340

Hitco
Defense Products Div.
1600 W. 135th St.
Gardena, Calif. 90249

Northrop Corporation
Ventura Division
1515 Ranch Conejo Blvd.
Newbury Park, Calif. 91320

Rohr Industries, Inc.
Foot of "H" Street
P.O. BOX 878
Chula Vista, Calif. 91912-0878

* Technical Plastics Corp.
938 So. Bayshore Blvd.
San Mateo, Calif. 94402

Whittaker Corp.
Adv. Structures Div.
801 Royal Oaks Drive
Monrovia, Calif. 91016

The Boeing Company
Wichita Division
3801 S. Oliver
Wichita, Kansas 67210

Fairchild Industries, Inc.
Aircraft-Missiles Div.
Haggerstown, Maryland 21740

Martin Marietta Corp.
103 Chesapeake Park Plaza
Baltimore, Maryland 21220

* Aeronca, Inc.
Aerospace Group
1712 Germantown Rd.
Middletown, Ohio 45042

* Goodyear Aerospace Corp.
1220 Massillon Road
Akron, Ohio 44135

North American Rockwell Corp.
Tulsa Division
P.O. Box 51308
Tulsa, Oklahoma 74151

* LTV
Ling-Temco-Vought, Inc.
P.O. Box 5003
Dallas, Texas 75222

Brunswick Corp.
325 Brunswick Lane
Marion, Virginia 24354

Heath Techna Corp.
19819 84th Ave. S.
Kent, Washington 98031

Hitco
3016 Auburn Way N.
Auburn, Washington 98002

* The Boeing Company
Auburn Facility
Auburn, Washington 98002

BOEING PROPRIETARY - Copyright © - Unpublished Work - See title page for details.

2. How to Use this Portion of the Manual

   A. Use Fig. 1, Table 1 to find the repair limitations and the applicable repair scheme.

   B. Repair the component by following the repair instructions. Where applicable, restore the flame sprayed aluminum coating and the Tedlar coating.

   C. Repair materials are listed in 51-20-3.

3. Preparation of Damage Area

   A. Determine Damage

      CAUTION: DO NOT USE CHEMICAL PAINT STRIPPERS TO REMOVE PAINT BEFORE MAKING DAMAGE EVALUATIONS. DAMAGE TO THE ADHESIVE RESIN SYSTEM WILL OCCUR.

      (1) Examine visually for extent of damage.

      (2) Check part in vicinity of damage for entry of water, oil, fuel, dirt or other foreign matter. Water can be detected by radiographic methods. Remove contaminants. Refer to par. 3.B. for water removal instructions.

      (3) Check for delamination around the damage.

         NOTE: Delamination can be detected by instrumental nondestructive inspection (NDI) methods or by tap test. For the tap test, use a solid metal disk and tap the repair area lightly, but firmly. Void areas will give a dull sound. Solidly bonded areas will give a sharp ring. Refer to Part 1 of the Nondestructive Test Manual.

   B. Remove Water from Damaged Area

      (1) Remove water from honeycomb sandwich (Fig. 9).

         (a) Remove damaged skin plies to open up honeycomb area in the damaged area. Remove standing water using vacuum or oil-free compressed air.

         (b) Sand the core to remove the adhesive. Removal of adhesive fillets on core is not required.

         (c) Apply screen over exposed core.

(d) Apply a thermocouple to the center of the screen.

(e) Apply a layer of glass fabric bleeder cloth over the screen and hold in place with masking tape.

(f) Place a vacuum line on the edge of the bleeder cloth and hold in place with masking tape.

(g) When opposite face is accessible, apply thermocouple to the opposite side of honeycomb sandwich panel.

(h) When opposite face is accessible, apply a heat blanket to opposite side of honeycomb sandwich panel.

NOTE: When opposite face is accessible, it is acceptable to heat the area using a heat blanket only on the opposite face. An additional heat blanket may be used on the near face at the location shown in Fig. 15. The additional heat blanket accelerates water removal. When opposite face is inaccessible, use of heat blanket on the near side is required.

(i) When opposite face is inaccessible or when using an additional heat blanket, perform the following steps:

1) Apply a thermocouple to the center of the bleeder cloth.

2) Place the heat blanket over the bleeder cloth.

(j) Place extruded sealing compound around the entire area and seal the area with vacuum bag material.

(k) Evacuate the layup to a minimum 22 inches of mercury vacuum.

(l) Heat the area for 1 hour minimum at 150°F (66°C) to 170°F (77°C). The rate of temperature rise must not exceed 5°F (3°C) per minute.

(m) Remove layup materials and proceed with repair procedure.

(2) Remove water from solid laminate.

(a) Remove damage and/or delaminated skin. Remove standing water using vacuum or oil-free compressed air.

(b) Heat the area for 1 hour minimum at 150°F (66°C) to 170°F (77°C). The rate of temperature rise must not exceed 5°F (3°C) per minute.

C. Removal of Damage - All Honeycomb Assemblies except Radome

NOTE: Refer to 53-50-4 for repairs to radome.

(1) Trim out the damaged laminates and where the core is also damaged cut it out to a smooth outline, unless a potted core repair is to be made when damage removal is not required. Areas contaminated by water that cannot be dried out by heating must be removed with the other damaged material.

WARNING: THE SANDING GIVES OFF A FINE DUST THAT MAY CAUSE SKIN IRRITATIONS. BREATHING OF AN EXCESSIVE AMOUNT OF THIS DUST MAY BE INJURIOUS. OBSERVE PRECAUTIONS FOR SKIN AND RESPIRATION PROTECTION.

(2) Sand out the damage to a circular or oval shape with a uniform taper on the exposed edge of the laminates. This taper should be over a minimum distance of 0.80 inch for each ply for repairs using the normal curing period and 0.50 inch for each ply for repairs using the short curing period. Tapering is not required where external repairs with the accelerated cure are being used (Fig. 2 and 3).

NOTE: The sanding can be done with a flexible disk sander, a belt sander, a rotating pad sander or by hand. Use No. 180 sandpaper, or equivalent.

Where the number of plies is not apparent the depth of the sanded area can be measured with a spline or straightedge and feeler gages. The thickness of each impregnated ply of glass fabric is:

BMS 9-3, Type D cloth = 0.0045 inch
BMS 9-3, Type H-2 or H-3 cloth = 0.009 inch

D. Cleaning of Repair Area

(1) Remove all sanding dust using oil-free compressed air.

WARNING: KEEP SOLVENTS AWAY FROM SOURCES OF HEAT, FIRE, OR SPARKS. HEAT, FIRE, OR SPARKS CAN CAUSE AN EXPLOSION.

AVOID CONTACT OF SOLVENT WITH SKIN, EYES, AND CLOTHING. WEAR EYE PROTECTION AND USE MECHANICAL VENTILATION OR RESPIRATORY PROTECTION WHEN WORKING IN A CONFINED SPACE OR AREA. BREATHING VAPORS OR ALLOWING SOLVENT TO CONTACT SKIN OR EYES IS HAZARDOUS.

CAUTION: DO NOT IMMERSE PARTS IN TRICHLOROETHANE SOLVENT OR ALLOW STANDING SOLVENT ON PART. DAMAGE TO PART WILL OCCUR.

(2) Wipe surfaces with a clean cloth moistened with MIBK (methyl isobutyl ketone), MEK (methyl ethyl ketone), trichlorethane, or acetone. Allow solvent to evaporate before proceeding with the repair.

4. Repairs with a Normal Curing Period

NOTE: These repairs apply to all glass fabric reinforced honeycomb components, except radomes. For radome repairs, refer to 53-50-4.

A. Honeycomb Core Repair Using Core Plug

(1) Fabricate core plug of HRH-1/8-3.0 fiberglass honeycomb to fit snugly into cleaned out damage area, flush with original core and with honeycomb cells aligned in the same direction. Replacement core must overlap and make intimate contact with the cell walls of surrounding core material.

NOTE: Refer to 51-40-06, Fig. 9 and 10 for methods of cutting core material.

(2) Apply Potting Compound 1 or Resin Mix 2 prepared as shown in Fig. 2 around the periphery of the core plug and the inside of cleaned out damage area.

(3) Install core plug into damage area (Fig. 2).

B. Potted Core Repair

(1) Potting can be used as an alternative to the core plug repair described above if the core damage is 0.5 inch diameter or less.

(2) Fill cleaned out damage in honeycomb core with Potting Compound 1, or Resin Mix 2 prepared as shown in Fig. 2. Removal of damaged core is not required when using this potted core repair.

C. Skin Delamination

(1) Inject BMS 5-126 or Resin Mix 1 prepared as shown in Fig. 2 into the delaminated area to rebond the separation or replace the plies as shown in par. 4.E. Where the skin is separated from the core the plies must be replaced.

D. Repair of Puncture 3/16-Inch Diameter or Less

(1) Add milled glass fibers (cationic binders) to Resin Mix 1 to obtain a filler material with the consistency of putty (Fig. 2).

(2) Work the material into the cavity.

(3) Allow the material to cure.

(4) Carefully sand any projecting material to fair with the surrounding surface.

E. Repair of Laminates

(1) From BMS 9-3, Type H-2 or H-3, fiberglass cloth, cut a piece that is large enough for the required number of plies for the patch to be cut from it.

NOTE: Use one ply of BMS 9-3, Type H-2 or H-3, fiberglass cloth in the patch for each damaged ply of the original laminate, except use one additional repair ply when required in the repair index of Fig. 1, Table 1. If BMS 9-3, Type H-2 or H-3 fiberglass cloth is not available, three plies of BMS 9-3, Type D cloth can be used for each ply of BMS 9-3, Type H-2 or H-3, required.

(2) Cut two pieces of parting film approximately 3 inches larger all around than the fiberglass cloth and tape down one piece to a smooth surface.

NOTE: Use PVA film or other parting films listed in 51-20-3.

(3) Spread Resin Mix 1 adhesive mixture prepared as shown in Fig. 2 over parting film and place the fiberglass cloth over the adhesive.

NOTE: Weight of adhesive approximately equal to the weight of the dry fiberglass cloth is required to impregnate the cloth.

(4) Cover the cloth on the parting film with the second piece of parting film.

(5) Press the adhesive through the cloth by working over the parting film with a squeegee or roller, in order to impregnate the patch and to remove entrapped air.

NOTE: 51-10-1, Fig. 4 shows details of a squeegee that can be used to impregnate patches.

(6) Cut the impregnated cloth to the required sizes for each individual patch layer. The parting film on both sides of the cloth decreases fraying of the edges while cutting the cloth. Direction of fibers in patch should be in the same direction as fibers of base material.

NOTE: Cut the largest ply of cloth to the shape of the outside of the scarfed area. Cut each succeeding ply so that it is at least 0.80 inch smaller all around than the preceding ply, the total number of BMS 9-3, Type H-2 or H-3 cloth plies being equal to the number of damaged plies in the original laminate to the repaired, except use one additional repair ply when required in the repair index of Fig. 1, Table 1.

(7) Clean the repair area per par. 3.D.

(8) Apply a coat of Resin Mix 1 adhesive mixture prepared as shown in Fig. 2 over the repaired area.

(9) Remove parting film from one side of the smallest ply of the patch and place the exposed face against the repair area, with direction of fibers in the same direction as fibers of base material.

(10) Use a squeegee over the parting film that covers that patch to remove wrinkles and entrapped air. Do not apply excessive pressure. Exessive pressure will produce a patch deficient in adhesive.

(11) After removing parting film from the contact faces, place the next larger size ply of the impregnated patch over the ply on the repair area with at least 0.80-inch overlap all around.

(12) Place succeeding plies of the patch as described in steps (10) and (11) above.

(13) After placing the last ply, cover the entire lay-up with a piece of parting film extending about 0.50 inch over edges of the patch.

(14) Sweep excess adhesive to edges of parting film thereby fairing the edges of the patch to the contour of the repair surface. All loose threads shall be embedded in resin.

(15) Wipe off any excess adhesive that has been squeezed out at the edges of the parting film.

F. Curing of Repair to Laminates

(1) Required curing time for Resin Mix 1 is approximately 10 to 12 hours at 70°F or 30 to 60 minutes at 200°F. To obtain a repair of high structural integrity, a vacuum film diaphragm must be sealed over the repair area and vacuum applied and held for the duration of the cure. A cured patch is hard and resounds when tapped lightly with a coin or other light metallic object.

NOTE: When heat is used to cure a patch over honeycomb core, it is necessary to sweep the area constantly with a squeegee to remove air bubbles as they form.

(2) Remove parting film from the patch after curing.

(3) The patch should be free from pits, blisters, starved areas and excess resin deposit.

(4) Sand the repaired skin lightly and seal with Resin Mix 3. See figure 2. Scrape off all excess resin sealer before it has gelled. Allow to cure for a minimum of 24 hours at 70°F before use.

5. Repairs with a Short Curing Period

NOTE: These repairs apply to nonelectronic components made from glass fabric reinforced honeycomb.

A. Repair to Honeycomb Core

(1) Wash out any dirt, sanding dust or foreign material with methyl ethyl ketone or acetone.

(2) After wash solvent has evaporated, fill the cleaned out area in the honeycomb core with potting compound prepared per figure 3.

(3) After 25 minutes, sand excess potting material flush with the previously sanded tapered area.

B. Repair of Laminates

(1) The procedure is similar to that shown in par. 4.E. except that Resin Mix prepared as shown in Fig. 3 is used in place of the resin mix specified.

(2) When cutting the cloth for the patches each laminate should be 0.50 inch smaller than the preceding one not 0.80 as specified in par. 4.E.

C. Curing of Repair

(1) To obtain a repair of high structural integrity a vacuum film diaphragm must be sealed over the repair area and a vacuum held for the duration of the cure.

(2) Allow approximately 1 hour 45 minutes for cure before removing the vacuum bag and parting film.

(3) The gel and cure times of the potting and laminating resins are based on ambient temperature (70° -80°F); elevated temperatures will advance the reactions and lower temperatures will retard reactions. An infared heat lamp, 250W 115-125V or equivalent, heat source may be used to speed up the cure. The graph shown in Fig. 4 indicates the temperature obtained on the patch surface when the heat lamp is a certain height. A height of 12-15 inches is recommended, which gives approximately a 10-minute cure.

6. External Repairs with Accelerated Cure

NOTE: These repairs apply to nonelectronic components made from glass fabric reinforced honeycomb. They must be examined periodically for possible deterioration, and must be replaced by a repair made in accordance with par. 5 when deterioration becomes evident.

A. Repair Procedure

(1) Cut a piece of BMS 9-3, Type H-2 or H-3 fiberglass cloth that is large enough so that two plies for the patch can be cut from it.

NOTE: If BMS 9-3, Type H-2 or H-3 fiberglass cloth is not available, three plies of BMS 9-3, Type D cloth can be used in place of one ply of BMS 9-3, Type H-2 or H-3.

(2) Cut the fiberglass cloth to the required sizes for each individal patch ply.

NOTE: Cut the smallest circular ply of cloth with a diameter 1 inch larger than the damaged area. Cut the largest circular ply of cloth with a diameter 2 inches larger than the damaged area.

(3) Fill the damaged honeycomb area with the paste resin mixture prepared per Fig. 5 and with a stiff brush or squeegee spread a film or resin mixture over the repair area extending approximately 1/4 inch beyond the periphery of the largest patch ply.

(4) Place the smallest fiberglass cloth patch ply against the repair area and coat with the resin mixture using a stiff brush.

(5) Place the largest patch ply against the preceding patch ply and coat with the resin mixture.

(6) Cover the entire layup with a piece of parting film extending one inch over the edges of the patch.

(7) Sweep entrapped air and excess resin to the edge of the parting film, thereby fairing the edge of the patch to the contour of the repair surface. All loose threads shall be embedded in the resin.

(8) Allow patch to cure before removing film.

7. Repairs for Damage to Glass Fabric Reinforced Epoxy Laminates

NOTE: These repairs apply to components made from laminated glass fabric and epoxy resin without a honeycomb core.

A. General

(1) A repair which requires removal and replacement of plies must be accomplished by adding one more ply than has been removed. The plies must be cut to match the warp and fill of the base material.

NOTE: It is permissible to replace each ply of BMS 9-3, Type H-2 or H-3 fabric with three plies of BMS 9-3, Type D fabric.

(2) A convenient means of preparing glass cloth patches is to impregnate the patches with catalyzed resin in any suitable manner and to place the individual patch between two sheets of parting film which are larger than the patch ply by at least 3 inches on all sides. The pieces are then cut to the desired shape without the usual fraying at the edges. When all pieces are ready for assembly, they are laid in place in subsequent order by first removing one of the layers of parting film.

CAUTION: CHEMICAL PAINT STRIPPERS MAY ATTACK RESIN SYSTEMS, THEREFORE, SHOULD NOT BE USED TO REMOVE PAINT FOR MAKING DAMAGE EVALUATIONS OR REPAIRS.

(3) Remove existing paint as required by sanding with 180 grit or finer sandpaper before removing damaged plies. After repair completion refinish per 51-21 of the 737 Maintenance Manual.

7. B. Repair of Damage Extending through One or More Plies

CAUTION: DO NOT USE CHEMICAL PAINT STRIPPERS TO REMOVE PAINT BEFORE MAKING DAMAGE EVALUATIONS. DAMAGE TO THE ADHESIVE RESIN SYSTEM WILL OCCUR.

(1) Remove any decorative coating as required, by sanding with 180 grit or finer sandpaper. Do not penetrate the surface of the outer glass ply.

(2) Determine the extent of the damaged area by visual examination. Cut away the damaged area with a sharp knife. Take care to avoid damage to surrounding material.

(3) Carefully sand the area adjacent to the damaged portion with 180 grit or finer sandpaper. The sanding should extend 1 inch from damage for each ply that has been removed plus a 1 inch border for the additional ply that will be required. The sanding should produce a beveled edge with a very shallow taper. Clean the repair area per par. 3.D.

(4) Clean the repair area per par. 3.D. If equipment for producing a vacuum during the subsequent curing process is to be used, cover the sanded area with masking tape and apply mold release (paste wax) to the surrounding surface that may be in contact with bleeder material. Remove the masking tape and reclean this area per par. 3.D.

(5) Impregnate the glass fabric patches with an equal weight of Resin Mix 1 (Fig. 2). Process as par 7.A.(2) above.

(6) Brush coat the sanded area with Resin Mix 1 and then fit the impregnated patch plies in place beginning with the smallest section. Fit each ply to exceed the previous ply by 1 inch with the last ply extending 1 inch beyond the damaged portion.

(7) Cover the impregnated plies with perforated PVA where the perforations are approximately 1/32 inch and spaced 1/2 inch apart. Place one ply of Osnaburg or glass fabric bleeder over this film. The perforated film should extend at least 2 inches beyond the impregnated plies and the bleeder another 3 to 4 inches beyond the PVA.

(8) Stretch a piece of PVA film over this entire area and seal with the use of double-backed tape or sealing compound.

(9) Evaluate the space under the PVA film by maintaining a minimum vacuum of 22 inches Mercury gage pressure minimum. Check the PVA diaphragm for leaks which may prevent minimum vacuum pressure. Correct any leaks in the system.

(10) Cure the repair at room temperature for several hours. Use heat lamps to expedite the cure. Do not exceed 160°F surface temperature when using lamps.

B95845

(11) Adequate cure will be determined by lightly tapping the resin bleed out. When this tapping produces a hard metallic ring the resin is sufficiently cured and may be allowed to cool to room temperature. Leave the vacuum on during the cooling period.

(12) Remove materials required for the vacuum process. Lightly sand the edge of the topmost ply to produce a feather edge.

C. Repair of Punctures

(1) Repair a puncture which does not exceed 3/16 inch in diameter as detailed in par. 4.D.

D. Repair of Delaminations between Plies

(1) Inject Resin Mix 1 into the delaminated area to rebond the plies or replace the plies as described in par. B above.

8. Repair of Aluminum Flame-Sprayed Coatings

A. General

CAUTION: CHEMICAL PAINT STRIPPERS MAY ATTACK RESIN SYSTEMS, THEREFORE, SHOULD NOT BE USED TO REMOVE PAINT FOR MAKING DAMAGE EVALUATIONS OR REPAIRS.

(1) The repair of damaged flame-sprayed aluminum coatings is governed by the extent of damage to, and the electrical requirements of, the surface. Damage is defined as minor or major to electrically critical or noncritical panels.

(2) Minor damage is limited to 25 square inches in any one area and to not more than 10% of the total flame-sprayed coating. However, where the panel is electrically critical, repair procedures are governed by the further limits of par. 8.B.

(3) Major damage requires the overspraying of areas in excess of those defined as minor damage, including the limits as defined for electrically critical surfaces.

(4) Repairs to flame-sprayed aluminum coatings may be carried out to the procedures outlined in par. 8.C. (repair of flame-sprayed coatings by potting) and in par. 9 (repair of flame-sprayed coatings by overspray). Repairs made using the potting process restore only partial electrical conductivity to the surface and are for this reason restricted by the limits of par. 8.B. Repairs made by overspraying the damaged area fully restore electrical conductivity when made according to the requirements of par. 9. Repairs to noncritical areas may be made with the conductive coating process described in par. 8.D.

(5) Repairs by flame-spraying glass fabric reinforced epoxy resin components may be carried out by any of facilities listed in par. 1.L. However, where a metal-spraying capability exists, damaged flame-sprayed aluminum coating may be repaired as outlined in par. 9.

B. Repair Limits - Electrically Critical Areas

(1) Damaged flame-sprayed aluminum coating in electrically critical areas may be repaired by applying a potting compound to partially restore electrical conductivity providing the damage does not exceed the following limits. Any damage in excess of these limits must be repaired as detailed in par. 9.

(a) Marks on the metalized surface up to 0.10 inch wide by 0.5 inch length: not more than four in any 1 square inch and not more than 10 square inches on the entire panel. Penetration of the metalized surface must not exceed 0.01 square inch in any one mark and not more than 10% of the marks may penetrate the coating.

(b) Scratches on the surface which do not entirely penetrate the metal-sprayed coating are limited to 0.05 inch in width and 5 inches in length: not more than two scratches in any 100 square inch area. These areas shall not exceed 10% of a specific metal-sprayed surface.

(c) Punctures of the metal-sprayed coating which do not exceed 0.03 square inch and not more than two punctures in any 100 square inches. Not more than six punctures per panel are allowed.

(d) Dents which do not penetrate the metal-sprayed coating and do not exceed 0.20 square inch. Not more than three in any 100 square inches and not more than six dents per panel are allowed.

NOTE: The total amount of damage repairable by potting is 10% of the total metal-sprayed surface.

C. Repair of Flame-Sprayed Coatings by Potting

(1) Lightly sand the repair area with 240-grit or finer abrasive paper.

NOTE: The area to be repaired by this procedure shall not extend into the glass fabric of the laminate or sandwich structure.

(2) Clean the repair area per par. 3.D.

(3) Thoroughly mix together by weight 100 parts of Epocast 1511 and 15 parts of 9614 hardener (Fig. 5).

(4) Apply the potting compound resin with a spatula to the areas to be repaired. Apply an excess to allow for shrinkage during cure.

(5) Cure the potting resin at room temperature for 24 hours or in an air circulating oven at 140 (+20/-10)°F for 4 hours + 20 minutes.

(6) Sand the potted area with 240-grit or finer abrasive to produce a smooth surface that is flush with the surrounding area.

(7) Apply alodine to repaired area as detailed in 51-10-2.

D. Repair Procedures - Electrically Noncritical Areas

(1) Lightly sand the area with 320-grit abrasive paper.

(2) Clean the repair area per par. 3.D.

(3) If necessary, apply pinhole filler (Ref 51-21-71 Maintenance Manual).

(4) Apply BMS 10-11, Type 1 primer overlapping the undamaged flame-sprayed surface around the damaged area by approximately 0.75 inch.

(5) Mask the outer 0.25-inch perimeter of the primed area so that the subsequent conductive coating will only overlap the flame-sprayed surface 0.50 inch. Apply conductive coating as described in Maintenance Manual, 51-21-71.

CAUTION: CONDUCTIVE COATING MUST NOT BE PERMITTED TO COME INTO DIRECT CONTACT WITH THE FLAME-SPRAYED SURFACE DUE TO THE POSSIBILITY OF ELECTROLYTIC CORROSION.

(6) Measure the electrical resistance as described in the Maintenance Manual, 51-21-71, ensuring that readings are taken between the original flame-spray coating and the conductive coating.

(7) Restore the finish according to the Maintenance Manual, 51-21-71.

9. Repair of Aluminum Flame-Spray Coating - Full Conductivity

CAUTION: DO NOT USE CHEMICALS TO REMOVE PAINT FOR DAMAGE ESTIMATES OR REPAIRS. DAMAGE TO THE RESIN SYSTEM CAN OCCUR.

NOTE: This repair uses the metal overspray procedure to repair aluminum flame spray coating to their full electrical conductivity and continuity.

9. A. Repair the Damaged Aluminum Flame-Spray Coating

(1) Clean the area with MEK acetone, toluene or with a mixture of 42 ± 2 percent MEK and 58 ± 2 percent sec-butyl-alcohol by volume. Refer to Process Specification BAC5750.

(2) Use masking tape to isolate the repair area.

CAUTION: WHEN YOU DO ABRASIVE BLAST PROCEDURES IN AREAS WHERE LUBRICATION FLUIDS OR GREASE ARE APPLIED, USE CARE TO PREVENT CONTAMINATION OF THE LUBRICANT WITH THE BLAST RESIDUE. THIS CONTAMINATION CAN AFFECT THE LUBRICATION PROPERTIES AND THE RESULT CAN BE INCREASED WEAR OF THE LUBRICATED PARTS.

(3) Lightly grit blast the repair area with 180 grit or finer abrasive.

NOTE: Do not abrade into substrate structure.

(4) Lightly bevel the structure a minimum of 1 inch into the flame spray coating, on all sides of the repair area.

(5) Clean the area with a strong blast of filtered shop air.

CAUTION: DO NOT LET THE TEMPERATURE OF THE PART BE MORE THAN 120°F (49°C) WHEN YOU APPLY THE FLAME SPRAY. HIGHER TEMPERATURES CAN CAUSE THE COATING TO HAVE A CRACK OR A BLISTER.

(6) Apply the aluminum flame spray to a thickness of 0.010 to 0.012.

(7) Cure the parts that have flame spray.

(8) Seal the repaired flame spray areas with BMS 8-207, Type I, Class 1 or BMS 8-201, Type II.

(a) Mix the resin. Refer to the manufacturer's instructions.

(b) Apply the resin above the area of overspray.

(c) Cure the resin.

(9) Lightly abrade the area so that there is a smooth continuous surface with the initial metal sprayed area. Clean the area with a strong blast of filtered shop air.

(10) Apply a chemical conversion coating to the repaired area. Refer to SRM 51-10-2.

(11) Apply a surface finish to the repair area. Refer to AMM 51-21-71.

BOEING PROPRIETARY - Copyright © - Unpublished Work - See title page for details.

9A. Repair of the Aluminum Flame-Sprayed Conductive Surface of ADF Sense Antennas

CAUTION: DO NOT USE CHEMICAL PAINT STRIPPERS TO REMOVE PAINT BEFORE MAKING DAMAGE EVALUATIONS. DAMAGE TO THE ADHESIVE RESIN SYSTEM WILL OCCUR.

NOTE: This is a time-limited repair which should be replaced with a permanent repair at the earliest opportunity. In no event should an antenna with such a time-limited repair be retained in service for a period in excess of six calendar months. These time-limited repairs must be regularly inspected to determine the security of all components.

A. General

(1) Repairs to ADF sense antennas may require two separate operations as follows:

(a) Repair of the honecomb structure.

(b) Repair of the flame-sprayed conductive surface.

CAUTION: THE FLAME-SPRAYED ANTENNA AREA OF THE PANEL IS SURROUNDED BY A NONCONDUCTIVE BORDER 3.0 (+1.0/-0.02) INCHES WIDE TO SEPARATE IT FROM THE REMAINDER OF THE PANEL WHICH IS FLAME-SPRAYED OR CONDUCTIVE COATED. THIS BORDER MUST REMAIN NONCONDUCTIVE TO MAINTAIN THE ELECTRICAL CHARACTERISTICS OF THE ANTENNA.

(2) Repair the honeycomb structure within the limits specified in Fig. 1, as detailed in par. 3 and 4.

CAUTION: REWORK SHOULD ENCOMPASS ONLY THE DAMAGED AREA. THE ORIGINAL FLAME-SPRAYED SURFACE SHOULD BE PRESERVED AS MUCH AS POSSIBLE

(3) Repair of flame-sprayed conductive surface.

(a) Measure the diameter of the area after repair as in 9A.A.(2) and the distance from the antenna feed stud (Fig. 7). Check these dimensions against the graph to determine which type of repair is necessary.

Example: An antenna has a damage area with a dimension (D) of 10 inches in the flame-sprayed coating, located 20 inches distant (A) from the antenna feed. From the graph in Fig. 7 it will be seen that only a surface repair is required to maintain system performance.

BOEING PROPRIETARY - Copyright © - Unpublished Work - See title page for details.

9A. A.. (4) Apply a fillet seal of BMS 5-95 sealant, both internally and externally, to the antenna feed stud if removed and replaced during the repairs.

9A. B. Repair Procedure when Reworked Area is 2 or More Inches in Diameter

(1) Using medium-grade abrasive paper, lightly sand the area surrounding the repair to remove the finish and lay bare the flame-sprayed coating. Bevel the edges of the flame-sprayed coating to merge with the surface of the repair.

(2) Clean the repair area per par. 3.D.

(3) Make a repair patch of BMS 9-3, Type H-2 or H-3 fiberglass cloth to slightly overlap the repair area.

NOTE: If BMS 9-3, Type H-2 or H-3 fiberglass cloth is not available, three plies of BMS 9-3, Type D cloth can be used in place of one ply of BMS 9-3, Type H-2 or H-3.

(4) Weigh and mix the resin (Fig. 8). Resin mix should be approximately twice the weight of cloth required for the repair.

(5) Apply approximately one half of the resin mix to the repair area and spread out evenly.

(6) Position the fiberglass cloth over the repair and press into resin.

(7) Apply the remainder of the resin mixture over the cloth and spread evenly to completely impregnate the cloth. Ensure that a good electrical bond is made between the existing flame-sprayed coating and the silver epoxy. Remove all air bubbles.

(8) Apply pressure to the repair using a vacuum bag as detailed in par. 7B. Use a perforated PVA parting film under the bleeder cloth. Use a squeegee to remove entrapped air and excess resin.

(9) Cure the repair using the temperatures and times in Fig. 8.

(10) Remove the vacuum bag and lightly sand the silver epoxy surface to roughen and fair the repaired area into the existing surface.

(11) Apply primer and refinish the repaired panel according to 51-21 of the 737 Maintenance Manual.

NOTE: The nonconductive finish should be carefully applied to seal the repaired area. Moisture penetrating the finish could cause galvanic action (electrolytic corrosion) between the silver and aluminum particles.

9A. C. Repair Procedure for Damaged Surface of 2 Inches or Less in Diameter

(1) Smooth out the damage using 180-grit (or finer) sandpaper. Taper the flame-sprayed finish into the cleaned up area.

(2) Clean the repair area per par. 3.D.

(3) Coat cleaned up area with resin mix, ensuring that a good bond is achieved between the existing flame-sprayed finish and the silver epoxy resin mix.

(4) Cover the repaired area with PVA, PVC or nylon parting film which should overlap by 1 inch (minimum) on all dimensions.

(5) Sweep the entrapped air and excess resin to edge of the parting film to fair the repair into the surrounding area.

(6) Cure the repair using the temperatures and times shown in Fig. 8.

(7) Lightly sand the repaired area to remove the shine from the cured silver epoxy resin mix and remove any irregularities in the repaired surface.

(8) Apply primer and finish as detailed in 51-21 of the 737 Maintenance Manual.

9A. D. Repair Procedures when Panel is Extensively Damaged

(1) When damage involves both the panel structure and the antenna feed repairs must be made using the following procedures:

(a) Remove the damaged antenna feed from the panel.

(b) Repair the damaged panel structure.

(c) Apply a layer of EPO-TEK417F silver epoxy (or alternatively flame spray) to the recessed area in which the antenna feed will be installed.

(d) Install a new or repaired antenna feed and apply a layer of EPO-TEK417F silver epoxy over the antenna feed to contact the surface of the panel.

(e) Cure and finish the surface of the panel as detailed in par. 9A.B.

9A. D. (2) Where the conductive surface of the antenna panel adjacent to the antenna feed has been extensively damaged and repair of the surface alone will not fully restore conductivity, the antenna feed should be modified as follows to improve conductivity:

(a) Manufacture a copper strip as required by length of flame-sprayed area of panel (Fig. 6).

(b) Locate strip on panel and drill holes through panel to match those of copper strip. Countersink as shown in Fig. 6.

(c) Apply a coating of EPO-TEK417F silver epoxy over the surface of the panel for the entire length of copper strip.

(d) Attach the end of the strip to the existing antenna feed screws. Secure copper strip to panel as shown in Fig. 6. Pot fasteners in honeycomb structure.

(e) Apply a coat of EPO-TEK417F silver epoxy to completely cover the copper strip and provide conductivity between strip and panel surface.

(f) Cure the epoxy using the times and temperatures shown in Fig. 8.

(g) Prime and finish as detailed in 51-21, 737 Maintenance Manual.

10. Repair of Tedlar Film

NOTE: This repair applies where repairs have been carried out to the inner surface of a component which was manufactured with a Tedlar film coating.

A. Seal repaired area with a thin coat of Resin Mix 3 prepared according to Fig. 2.

B. Scrape off all excess sealer before it has gelled.

C. Cure for a minimum of 24 hours at 70°F before use.

11. Repairs to High Temperature Resistant Phenolic Glass Fabric Laminates with Honeycomb Core

A. Provided that the limits for repairable damage shown in Figure 1 are not exceeded, components made with phenolic resins may be repaired in accordance with paragraphs 3, 4, 5 and 6.

12. Repairs to High Temperature Resistant Epoxy Glass Fabric Laminates with Honeycomb Core

    A. Provided that the limits for repairable damage shown in Figure 1 are not exceeded, components made with high temperature resistant epoxy resins may be repaired in accordance with paragraphs 3, 4, 5 and 6.

13. Repair of Dents (Fig. 11)

    A. Determine extent of damage according to par. 3.A. If fiber damage or delamination is found, refer to specific component structural repair subject.

    B. Mask off damaged area allowing 1.0 inch of overlap for the repair ply.

    C. Remove Tedlar or decorative finish per par. 2.C.(2)(b) and (c) of 51-40-12.

    D. Clean damaged area according to par. 3.D.

    E. Pot dent flush or slightly higher than surrounding surface with BMS 5-28, Type 7 potting resin.

    F. Cure the repair 12 hours at 75°F (24°C) or 2 hours at 125°F (52°C).

       CAUTION: DO NOT SAND INTO FIBERS IN THE AREA SURROUNDING DENT.

    G. Sand flush using 150 grit or finer sandpaper.

    H. Clean area according to par. 3.D.

    I. Prepare and apply repair ply according to Fig. 11 and par. 4.E. The repair ply must overlap the potted area 1.0 inch.

    J. Cure repair according to par. 4.F.

    K. Refinish the repair per 51-21-0 of the 737 Maintenance Manual.

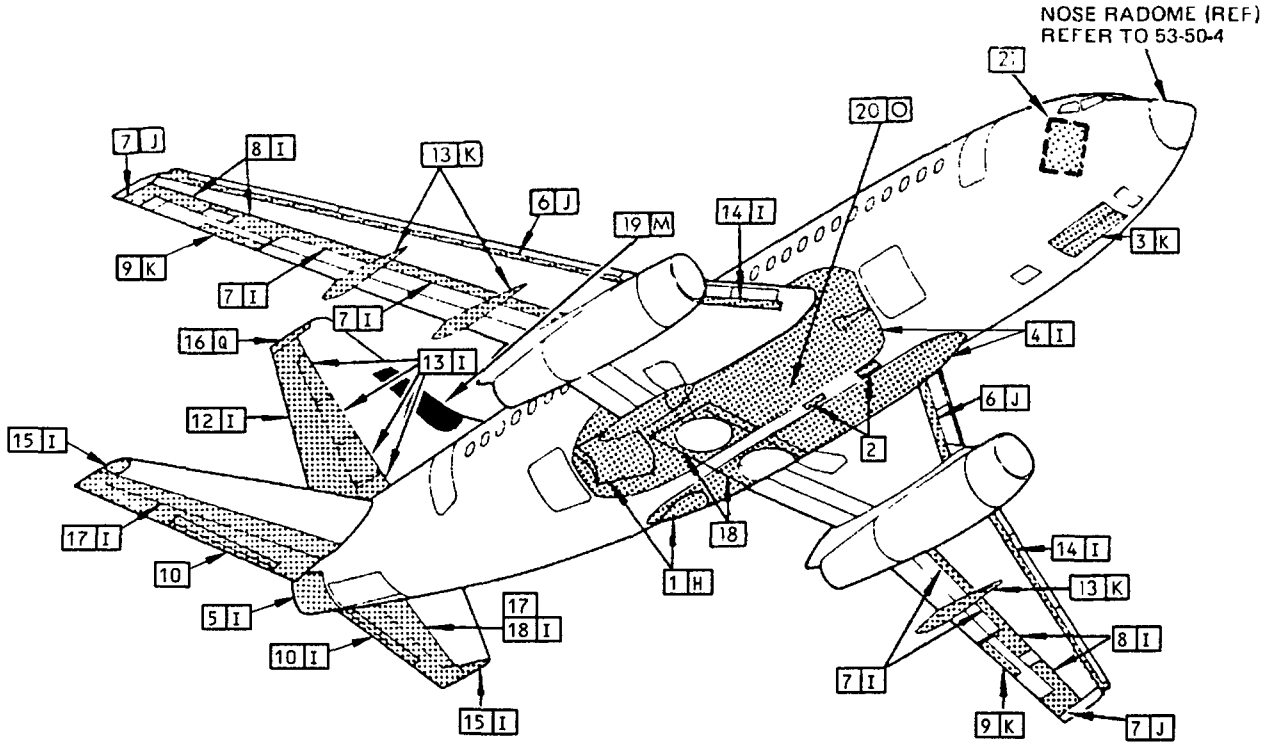

NOTES

[A] KEEP A WRITTEN RECORD OF THE DAMAGE AND REPAIR AREAS ON THE INSIDE SURFACE OF THE RADOME

[B] REFER TO 51-70 FOR AERODYNAMIC SMOOTHNESS REQUIREMENTS

[C] A TOTAL OF 100 SQUARE INCHES IS REPARABLE WITHOUT ELECTRICAL TESTING

[D] REPAIRS TO THE ANTENNA IN EXCESS OF 100 SQUARE INCHES MUST BE TESTED TO ENSURE THAT THE INSTALLED ANTENNA CAPACITANCE IS AS FOLLOWS:

250 PICOFARADS ± 5% FOR 737-100 AIRPLANES
150 PICOFARADS ± 5% FOR 737-200 AIRPLANES

WHEN MEASURED WITH A CAPACITANCE BRIDGE BETWEEN THE ANTENNA AND THE AIRPLANE STRUCTURE

THE ANTENNA COUPLERS ARE LOCATED ON THE AFT BULKHEAD OF THE WHEEL WELL AND ARE ACCESSIBLE. DISCONNECT THE CABLE BEFORE MAKING THE TEST

[E] DAMAGE INCLUDES DETERIORATION, DELAMINATION, EROSION, DENTS, GOUGES, SCRATCHES AND PUNCTURES

[F] ALUMINUM HONEYCOMB CONSTRUCTION HAS BEEN USED ON CUM LINE NUMBERS: 2 THRU 7, 9, 10

Fiberglass Reinforced Plastics Damage Allowables and Repair Index
Figure 1 (Sheet 1)

BOEING PROPRIETARY - Copyright © - Unpublished Work - See title page for details.

NOTES (CONTINUED)

G NO LIMIT FOR MAXIMUM SIZE OF REPAIRABLE DAMAGE IF A TARGET TYPE THRUST REVERSER 10-61813 HAS BEEN INSTALLED ON THE AIRPLANE

H ANTENNA AREA FLAME SPRAYED, SEE PAR. 8, 9 AND 9A FOR RESTORATION. REMAINDER OF PANEL, EXCEPT FOR A 3.0-INCH WIDE NONCONDUCTIVE BORDER AROUND THE ANTENNA AREA, IS EITHER FLAME SPRAYED OR CONDUCTIVE COATED. SEE PAR. 8 AND 9 FOR RESTORATION OF FLAME SPRAYING, AND MAINTENANCE MANUAL 51-21-71 FOR RESTORATION OF CONDUCTIVE COATING. SEE PAR. 9A FOR TIME LIMITED REPAIR

I FLAME SPRAYED OR CONDUCTIVE COATED. AFTER PAINT REMOVAL FLAME SPRAYED AREAS ARE ALUMINUM COLORED AND CONDUCTIVE COATED AREAS ARE BLACK. RESTORE FLAME SPRAYED AREAS AS GIVEN IN PAR. 8 AND 9 AND CONDUCTIVE COATED AREAS AS GIVEN IN MAINTENANCE MANUAL 51-21-71

J FLAME SPRAYED, RESTORE AS GIVEN IN PAR. 8 AND 9

K CONDUCTIVE COATED, RESTORE AS GIVEN IN MAINTENANCE MANUAL 51-21-71

L AREAS OF DAMAGE, EACH NOT EXCEEDING 1 SQUARE INCH, DUE TO DETERIORATION DELAMINATION, EROSION, DENTS, GOUGES, SCRATCHES AND PUNCTURES ARE ALLOWED PROVIDED THAT:

(1) THEY ARE NOT WITHIN 2 INCHES OF AN EDGE OR EDGE ATTACHMENT FASTENERS

(2) MINIMUM SPACING BETWEEN UNREPAIRED AREAS OF DAMAGE IS 10 INCHES

(3) DAMAGE IS COVERED WITH NON-METALIZED SCOTCH BRAND 850 OR 853, OR PERMACEL P95 POLYESTER TAPE (TAPE REPAIR IS SATISFACTORY IF GROUND OPERATION OF RADAR APPEARS SATISFACTORY)

(4) LOCATION OF DAMAGE IS RECORDED AND REPAIRED AT THE FIRST AVAILABLE OPPORTUNITY

M AIRPLANES WITH FLUSH HF ANTENNA MOUNT

N FOR CUM LINE NUMBERS:
1 THRU 998

O FOR REPAIR WITH NORMAL CURING PERIOD THE MAXIMUM SIZE IS 3.0 MAX DIAMETER AND NO MORE THAN 30% OF THE SMALLEST DIMENSION ACROSS HONEYCOMB PANEL AT THE DAMAGE LOCATION. FOR REPAIRS WITH SHORT CURING PERIOD, THE MAXIMUM SIZE IS 6.0 MAX DIAMETER AND NO MORE THAN 50% OF THE SMALLEST DIMENSION ACROSS THE HONEYCOMB PANEL AT THE DAMAGE LOCATION. SEE SRM 53-50-3 FOR THE EXACT LOCATIONS OF THESE PANELS.

P IT IS OPTIONAL TO DO THE REPAIRS AS GIVEN IN SRM 51-40-15.

Q SEE DETAIL I FOR CRITICAL AREA. DAMAGE THAT MAKES CONTACT WITH THE VOR ANTENNA ELEMENT IS NOT PERMITTED. CONTACT THE BOEING COMPANY FOR REPAIR INFORMATION.

Fiberglass Reinforced Plastics Damage Allowables and Repair Index
Figure 1 (Sheet 2)

BOEING PROPRIETARY - Copyright © - Unpublished Work - See title page for details.

PART		CONSTRUCTION	MAXIMUM SINGLE DAMAGE ALLOWABLE WITHOUT REPAIR	REPAIRABLE DAMAGE	
				MAXIMUM SIZE	MINIMUM SPACING OF ADJACENT DAMAGED AREAS EDGE TO EDGE
1	ADF SENSE ANTENNA	HONEYCOMB CORE SANDWICH WITH LAMINATED PLIES OF GLASS FIBER	L E 1 SQUARE INCH DAMAGE PERMITTED PROVIDED THE DAMAGE IS SEALED FROM MOISTURE BY USE OF SCOTCH BRAND 850 OR 853 OR PERMACEL P95 TAPE. RECORD THE LOCATION OF THE DAMAGE AND REPAIR AT THE EARLIEST AVAILABLE OPPORTUNITY	4 INCHES DIAMETER WITH ONE ADDITIONAL REPAIR PLY. 2 INCHES DIAMETER IF REPAIRED PLY FOR PLY	12 INCHES C D
2	ADF LOOP ANTENNA				
3	NOSE LANDING GEAR DOOR			NO LIMIT. USE ONLY ONE PLY FOR EACH INITIAL PLY PLUS TWO ADDITIONAL REPAIR PLIES	
4	FAIRING FUSELAGE TO WING				
5	FUSELAGE TAIL CONE				
6	LEADING EDGE FIXED PANEL - WING	GLASS FABRIC LAMINATED PANELS			
7	UPPER AND LOWER TRAILING EDGE PANELS - WING	HONEYCOMB CORE SANDWICH WITH LAMINATED PLIES OF GLASS FIBER OR GLASS FIBER F LAMINATED PANELS			
8	UPPER AND LOWER TRAILING EDGE PANELS - WING	HONEYCOMB CORE SANDWICH WITH LAMINATED PLIES OF GLASS FIBER			
9	AILERON TAB - WING				
10	ELEVATOR AND TAB				
11	VERTICAL STABILIZER PANELS N				
12	RUDDER				
13	FLAP TRACK FAIRING - WING				
14	LEADING EDGE PANEL - WING				
15	HORIZONTAL STABILIZER TIP	GLASS FIBER LAMINATED PANEL			
16	VERTICAL STABILIZER TIP Q	GLASS FIBER LAMINATED PANEL			
17	HORIZONTAL STABILIZER TRAILING EDGE PANEL N	HONEYCOMB CORE SANDWICH WITH LAMINATED PLIES			
18	FAIRING - MAIN LANDING GEAR WHEEL WELL	PHENOLIC AND EPOXY GLASS FABRIC LAMINATES WITH HONEYCOMB CORE		3 INCHES DIAMETER G	6 INCHES

DAMAGE ALLOWABLES AND REPAIRABLE DAMAGE
TABLE I

Fiberglass Reinforced Plastics Damage Allowables and Repair Index
Figure 1 (Sheet 3)

PART		CONSTRUCTION	MAXIMUM SINGLE DAMAGE ALLOWABLE WITHOUT REPAIR	REPAIRABLE DAMAGE	
				MAXIMUM SIZE	MINIMUM SPACING OF ADJACENT DAMAGED AREAS EDGE TO EDGE
19	VERTICAL STABILIZER LEADING EDGE M	GLASS FIBER LAMINATED PANEL	SEE 55-30-1	NO LIMIT USE ONLY ONE PLY FOR EACH ORIGINAL PLY PLUS TWO ADDITIONAL REPAIR PLIES	NO LIMIT
20	FUSELAGE FAIRING-TO-WING INTERSTRUCTURE	GLASS/EPOXY HONEYCOMB PANELS	SEE 53-50-2	0	NO LIMIT
21	CREW DOOR PANELS		SEE 52-00-2	SEE 52-50-2	SEE 52-50-2

DAMAGE ALLOWABLES AND REPAIRABLE DAMAGE
TABLE I (CONTINUED)

Fiberglass Reinforced Plastics Damage Allowables and Repair Index
Figure 1 (Sheet 4)

PART		REPAIR INDEX [B] [P]		
		REPAIR WITH NORMAL CURING PERIOD	REPAIR WITH SHORT CURING PERIOD	EXTERNAL REPAIR WITH ACCELERATED CURE
[1]	ADF SENSE ANTENNA	SEE PARAGRAPHS 3 AND 4		
[2]	ADF LOOP ANTENNA			
[3]	NOSE LANDING GEAR DOOR		SEE PARAGRAPH 3 AND 5	SEE PARAGRAPH 3 AND 6
[4]	FAIRING FUSELAGE TO WING			
[5]	FUSELAGE TAIL CONE			
[6]	LEADING EDGE FIXED PANEL – WING	SEE PARAGRAPH 7		
[7]	UPPER AND LOWER TRAILING EDGE PANELS – WING	SEE PARAGRAPH 3 AND APPLICABLE PARAGRAPH 4 OR 7	FOR HONEYCOMB AREAS SEE PARAGRAPHS 3 AND 5	FOR HONEYCOMB AREAS SEE PARAGRAPHS 3 AND 5
[8]	UPPER AND LOWER TRAILING EDGE PANELS – WING	SEE PARAGRAPH 3 AND 4	SEE PARAGRAPH 3 AND 5	SEE PARAGRAPH 3 AND 6
[9]	AILERON TAB – WING			
[10]	ELEVATOR AND TAB			
[11]	VERTICAL [N] STABILIZER PANELS			
[12]	RUDDER			
[13]	FLAP TRACK FAIRING – WING			
[14]	LEADING EDGE PANEL – WING			
[15]	HORIZONTAL STABILIZER TIP	SEE PARAGRAPH 7		
[16]	VERTICAL STABILIZER TIP [Q]	SEE PARAGRAPH 7		
[17]	HORIZONTAL STABILIZER TRAILING EDGE [N] PANEL	SEE PARAGRAPH 3 AND 4	SEE PARAGRAPH 3 AND 5	SEE PARAGRAPH 3 AND 6
[18]	FAIRING – MAIN LANDING GEAR WHEEL WELL	SEE PARAGRAPH 11 AND 12		
[19]	VERTICAL STABILIZER LEADING EDGE	SEE PARAGRAPH 7		
[20]	FAIRING FUSELAGE TO WING INTERSTRUCTURE	SEE PARAGRAPHS 3 AND 4	SEE PARAGRAPHS 3 AND 5	
[21]	CREW DOOR PANELS	SEE PARAGRAPHS 3 AND 4	SEE PARAGRAPHS 3 AND 5	SEE PARAGRAPHS 3 AND 6

REPAIR INDEX
TABLE II

Fiberglass Reinforced Plastics Damage Allowables and Repair Index
Figure 1 (Sheet 5)

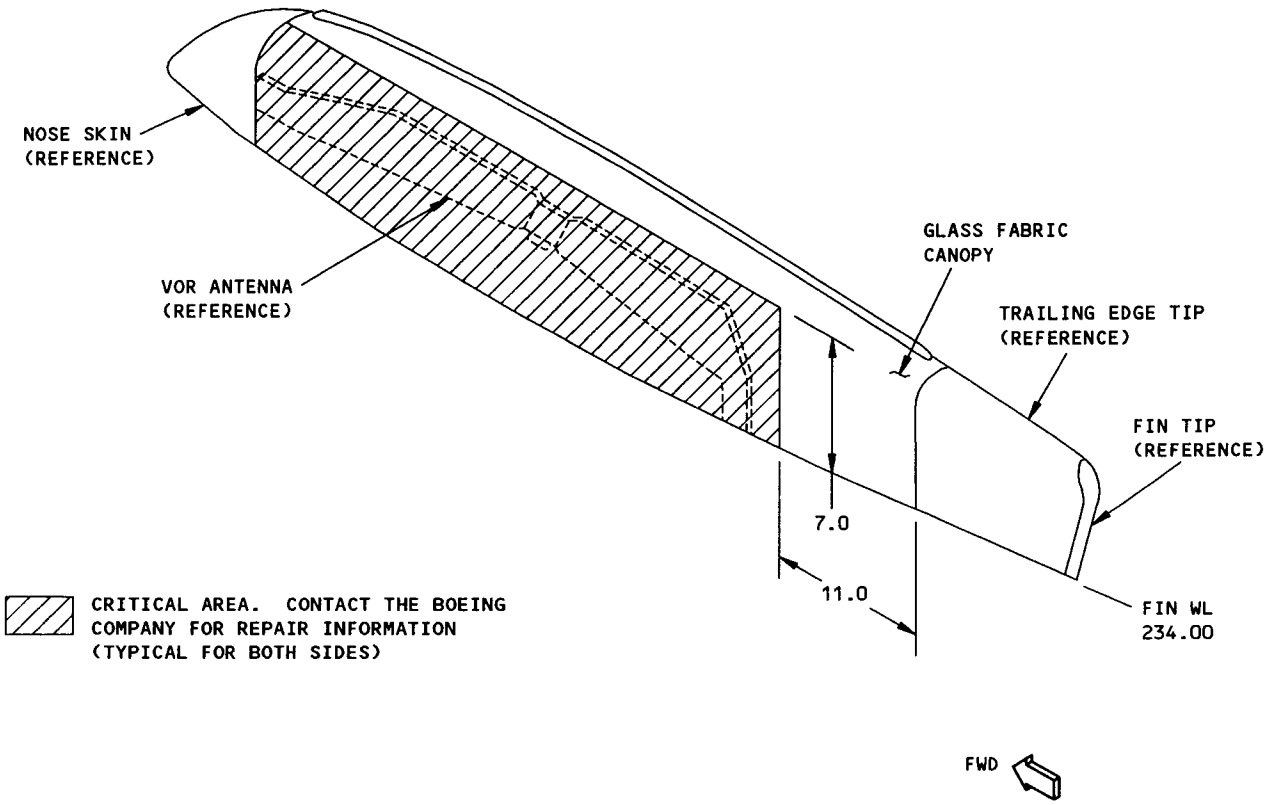

VERTICAL STABILIZER TIP

DETAIL I

Fiberglass Reinforced Plastics Damage Allowables and Repair Index
Figure 1 (Sheet 6)

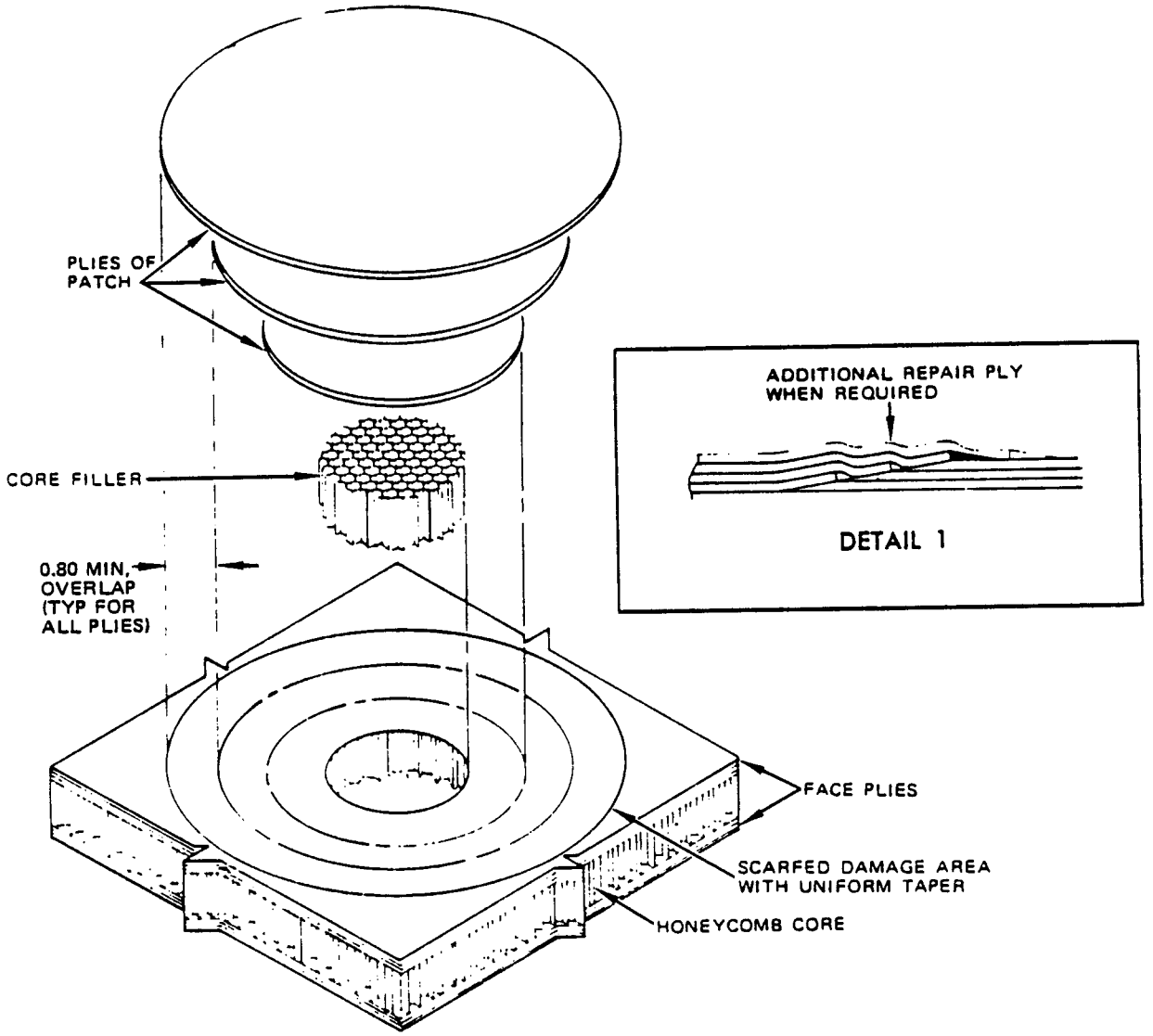

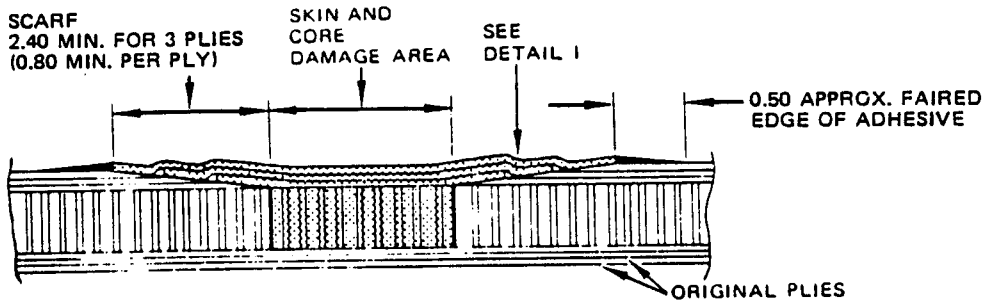

SECTION THROUGH REPAIR

Typical Honeycomb Assembly Repair
Figure 2 (Sheet 1)

WARNING

THESE CHEMICALS CONTAIN TOXIC INGREDIENTS. PROVIDE ADEQUATE VENTILATION AND PROTECT SKIN AND EYES FROM CONTACT WITH UNCURED RESINS OF CURING AGENT. WEAR RUBBER GLOVES OVER COTTON GLOVES FOR PROTECTION OF HANDS. IF SKIN IS EXPOSED TO DIRECT CONTACT WITH UNCURED RESINS OR CURING AGENT, WASH WITH WARM WATER AND SOAP. AVOID THE USE OF SOLVENTS FOR CLEANING SKIN.

POTTING COMPOUND 1	
COMPONENTS	PARTS BY WEIGHT
EPON 815	100
MICROBALLOONS	24
CURING AGENT "T"	22

Amount of microballoons may be varied from 16 to 25 parts by weight in order to obtain a mixture of the desired consistency. Also, the amount of Curing Agent "T" may be varied from 16 to 25 parts by weight. Increased amount of curing agent shortens the required curing time. Use only 16 parts of curing agent when making potted repairs larger than 1.50-inch diameter to prevent foaming of the potting compound.

MIXING PROCEDURE

1. Add microballoons to Epon 815 and mix throughly.

2. Add curing agent and mix throughly.

   NOTE: Pot life of mixture after adding curing agent is approximately 30 minutes. Cure time is approximately 4 hours at 70°F or 1 hour at 130°F.

BMS 5-126 (TYPE 2 CLASS I) ADHESIVE FOR FIBERGLASS	
COMPONENTS	PARTS BY WEIGHT
A	100
B	100

BLENDING PROCEDURE

1. MIX COMPONENT A THOROUGHLY

2. MIX COMPONENT B THOROUGHLY

3. THOROUGHLY BLEND EQUAL PARTS BY WEIGHT OF COMPONENTS A AND B.

NOTE: Mixture pot life is approximately 2 hours at 70°F.

CURING TIMES FOR BMS 5-126 (AT PRESSURE OF 10-15 PSI)	
TEMPERATURE	TIME
70 ±5°F	24 ±1 HOURS
100 ±10°F	12-1/2 ±1/2 HOURS
150 ±10°F	3-1/2 ±1/4 HOURS
250 ±10°F	20 ±5 MINUTES

BMS 5-28 (TYPE 7) POTTING RESIN	
COMPONENTS	PARTS BY WEIGHT
EPOCAST 89537A RESIN	100 ±1
EPOCAST 89537B HARDENER	22 ±1
CG 1305 RESIN	100 ±5
CG 1305 HARDENER	22 ±1
FR 7162 RESIN	100 ±5
FR 7162 HARDENER	40 ±2

MIXING PROCEDURE

1. Add hardener (Part B) to resin (Part A) and mix thoroughly.

   NOTE: Pot life of mixture is approximately 60 minutes at 70°F (21°C).

Typical Honeycomb Assembly Repair
Figure 2 (Sheet 2)

WARNING

THESE CHEMICALS CONTAIN TOXIC INGREDIENTS. PROVIDE ADEQUATE VENTILATION AND PROTECT SKIN AND EYES FROM CONTACT WITH UNCURED RESINS OR CURING AGENT. WEAR RUBBER GLOVES OVER COTTON GLOVES FOR PROTECTION OF HANDS. IF SKIN IS EXPOSED TO DIRECT CONTACT WITH UNCURED RESINS OR CURING AGENT, WASH WITH WARM WATER AND SOAP. AVOID THE USE OF SOLVENTS FOR CLEANING SKIN.

RESIN MIX 1 (LAMINATING RESIN)	
COMPONENTS	PARTS BY WEIGHT
EPOCAST 50A	100
EPOCAST 9816	15

MIXING PROCEDURE

1. Add Epocast 9816 to Epocast 50A and mix thoroughly.

NOTE: Mixture pot life is approximately 45-60 minutes at 75°F.

RESIN MIX 1 (LAMINATING RESIN) ALTERNATE	
COMPONENTS	PARTS BY WEIGHT
EPOCAST 8442 MOD III	100
EPOCAST 8442B HARDENER	15

MIXING PROCEDURE

1. Add Epocast 8442B to Epocast 8442 Mod III and mix thoroughly.

NOTE: Mixture pot life is approximately 45-60 minutes at 75°F.

RESIN MIX 2 (POTTING RESIN)	
COMPONENTS	PARTS BY WEIGHT
EPOCAST 50A	100
PHENOLIC MICROBALLOONS	30
EPOCAST 9816	15

MIXING PROCEDURE

1. Add Epocast 9816 to Epocast 50A and mix thoroughly.
2. Add phenolic microballoons to mixture in 1 above and mix thoroughly.

NOTE: Pot life of mixture after adding curing agent is approximately 45-60 minutes at 75°F.

RESIN MIX 3 (SEALER RESIN)	
COMPONENTS	PARTS BY WEIGHT
EPOCAST 156 EPOCAST 956	100 ±2.0 5 ±0.3
EPIBOND 156A EPIBOND 941	100 ±2.0 10 ±0.3

1. Components of Resin Mix 3 above are also available as an alternate in a two component kit (Epox-O-Weld) from Fiber Resin Corporation.

NOTE: Mixture pot life is approximately 45-60 minutes at 75°F.

POTTING RESIN FOR PUNCTURE NOT EXCEEDING 3/16 INCH	
COMPONENTS	PARTS BY WEIGHT
RESIN MIX 1	100
MILLED GLASS FIBERS 1/32" LENGTH CATIONIC BINDER	SEE STEP 1. BELOW

MIXING PROCEDURE

1. Add milled glass fibers to Resin Mix 1 to provide a consistency similar to putty.

NOTE: Pot life is approximately the same as Resin Mix 1.

Typical Honeycomb Assembly Repair
Figure 2 (Sheet 3)

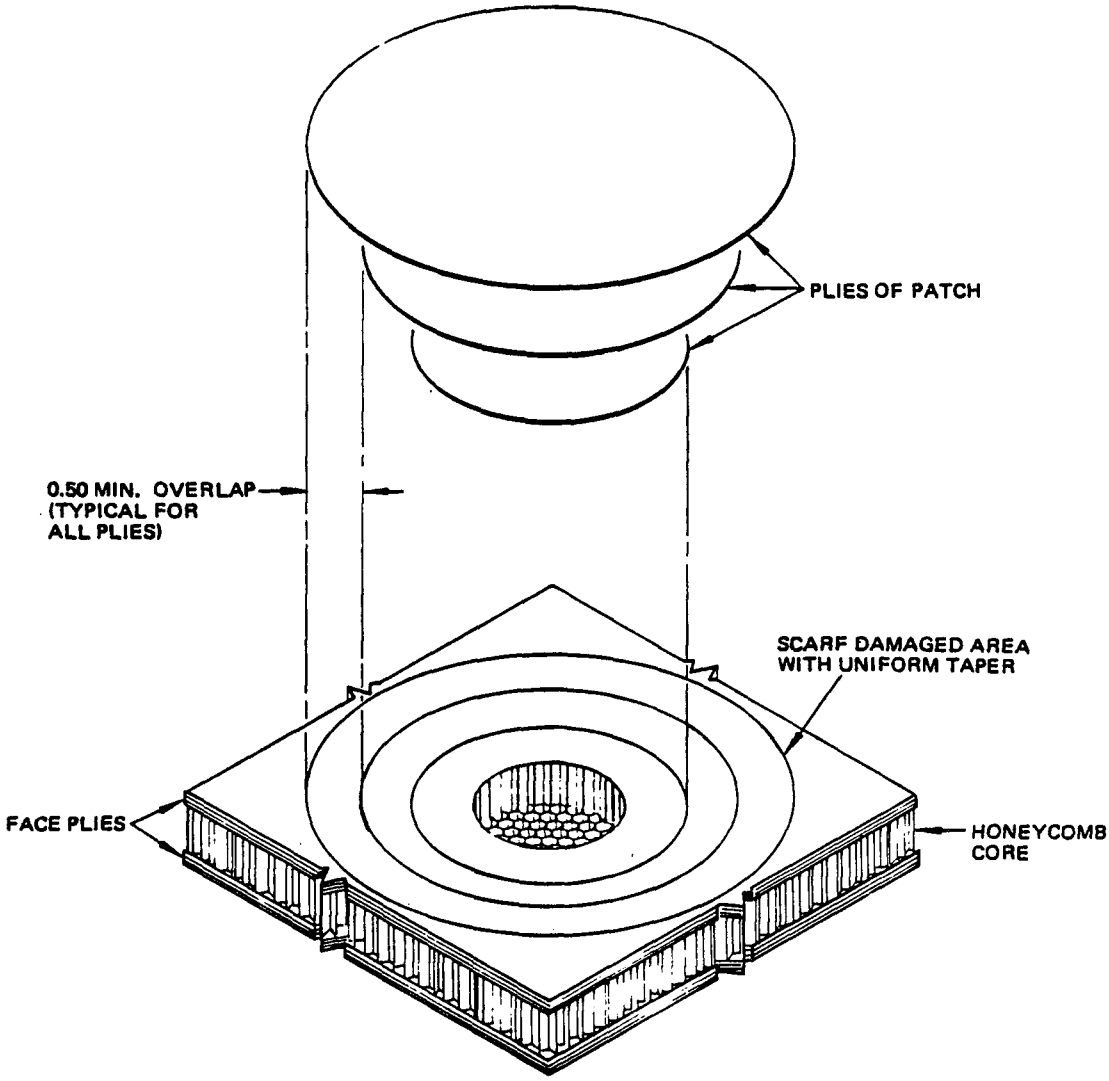

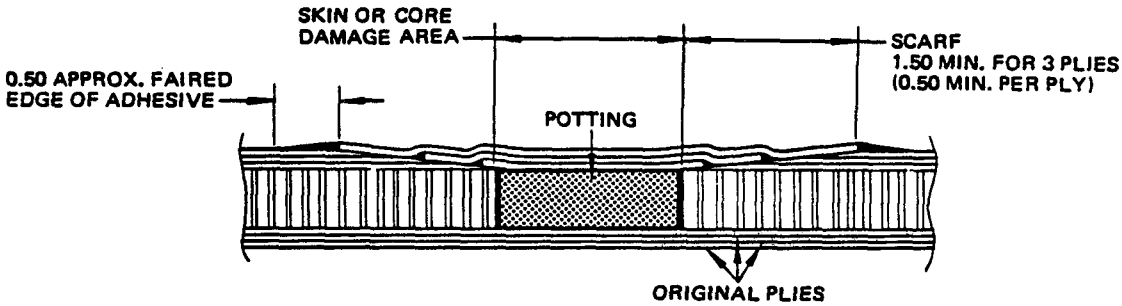

SECTION THROUGH REPAIR

Typical Honeycomb Assemble Repair with Short Cure Period
Figure 3 (Sheet 1)

WARNING

THESE CHEMICALS CONTAIN TOXIC INGREDIENTS. PROVIDE ADEQUATE VENTILATION AND PROTECT SKIN AND EYES FROM CONTACT WITH UNCURED RESINS OR CURING AGENT. WEAR RUBBER GLOVES OVER COTTON GLOVES FOR PROTECTION OF HANDS. IF SKIN IS EXPOSED TO DIRECT CONTACT WITH UNCURED RESINS OR CURING AGENT, WASH WITH WARM WATER AND SOAP. AVOID THE USE OF SOLVENTS FOR CLEANING SKIN.

RESIN MIXTURE	
COMPONENTS	PARTS BY WEIGHT
FORMULATION 87-3 RESIN (PART A)	100
HARDENER QX-2648 (PART B)	28

MIXING PROCEDURE

1. Add hardener (Part B) to resin (Part A) and mix thoroughly.

   NOTE: POT LIFE OF MIXTURE AFTER ADDING CURING AGENT IS APPROXIMATELY 10 MINUTES. CURE TIME IS 2 HOURS AT 70°F.

   NOTE: WEIGHT OF THE RESIN MIXTURE IS APPROXIMATELY 1-1/2 TIMES THE WEIGHT OF THE DRY FIBERGLASS CLOTH.

POTTING COMPOUND	
COMPONENTS	PARTS BY WEIGHT
FORMULATION 87-3 (PART A)	100
MICROBALLOONS	15 - 25
HARDENER QX-2648 (PART B)	28

- AMOUNT OF MICROBALLOONS MAY BE VARIED FROM 15-25 PARTS BY WEIGHT IN ORDER TO OBTAIN A MIXTURE OF THE DESIRED CONSISTENCY.

MIXING PROCEDURE

1. Add microballoons to 87-3 and mix thoroughly.

2. Add hardener and mix thoroughly.

   NOTE: POT LIFE OF MIXTURE AFTER ADDING HARDENER IS APPROXIMATELY 5 MINUTES. CURE TIME IS 20 MINUTES.

- DUE TO HIGH EXOTHERM, THE POTTED AREA MAY BLOW. ANY HOLES IN THE POTTING WILL FILL WITH EXCESS RESIN FROM THE PATCHING.

Typical Honeycomb Assembly Repair with Short Cure Period
Figure 3 (Sheet 2)

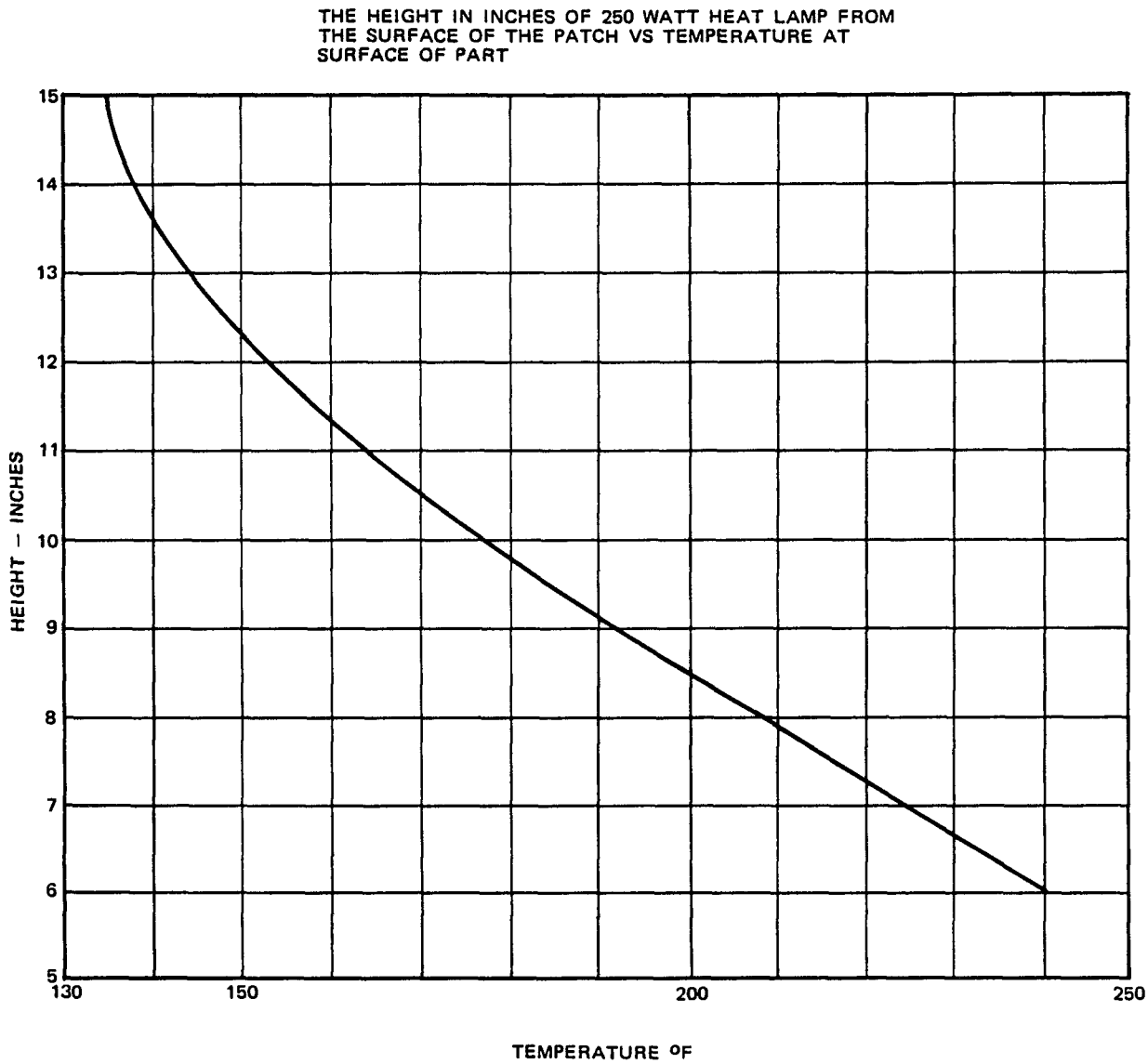

Potting and Laminating Resin Cure Temperature
Figure 4

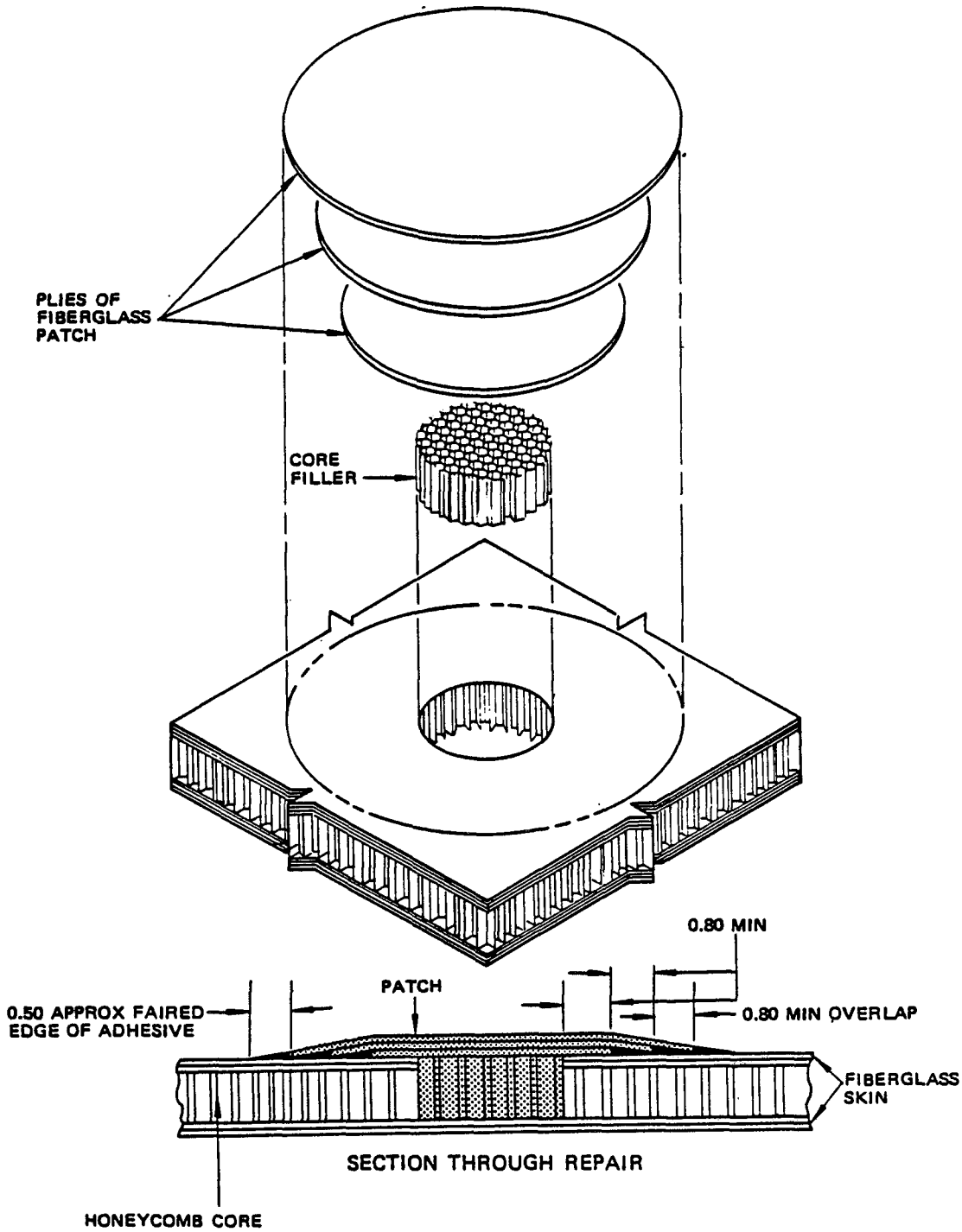

External Repair with Accelerated Cure for Glass Fabric Reinforced Honeycomb Components
Figure 5 (Sheet 1)

WARNING

THESE CHEMICALS CONTAIN TOXIC INGREDIENTS. PROVIDE ADEQUATE VENTILATION AND PROTECT SKIN AND EYES FROM CONTACT WITH UNCURED RESINS. WEAR RUBBER GLOVES OVER COTTON GLOVES FOR PROTECTION OF HANDS. IF SKIN IS EXPOSED TO DIRECT CONTACT WITH UNCURED RESINS, WASH WITH WARM WATER AND SOAP. AVOID THE USE OF SOLVENTS FOR CLEANING SKIN.

MIXING PROCEDURE

1. Follow vendor instructions listed with resin components.

NOTE: POT LIFE OF MIXTURE AFTER ADDING CURING AGENT IS APPROXIMATELY 20 MINUTES.

RESIN MIXTURE	CURE TIME
BMS 5-28 TYPE 3	7 DAYS AT 77±2°F OR 5 HOURS AT 125±5°F

External Repair with Accelerated Cure for Glass Fabric Reinforced Honeycomb Components
Figure 5 (Sheet 2)

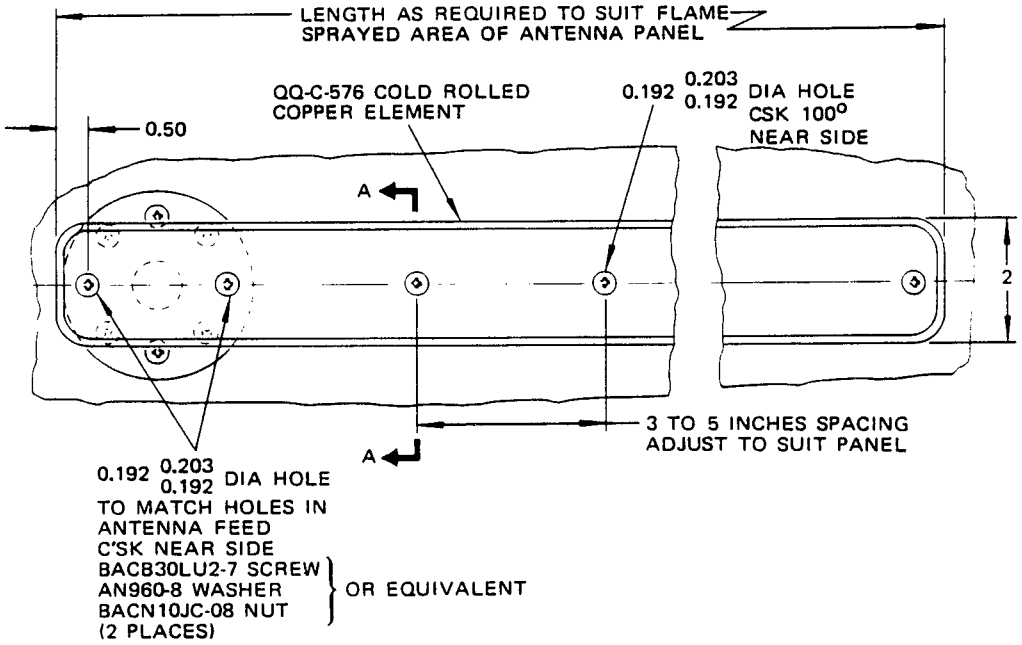

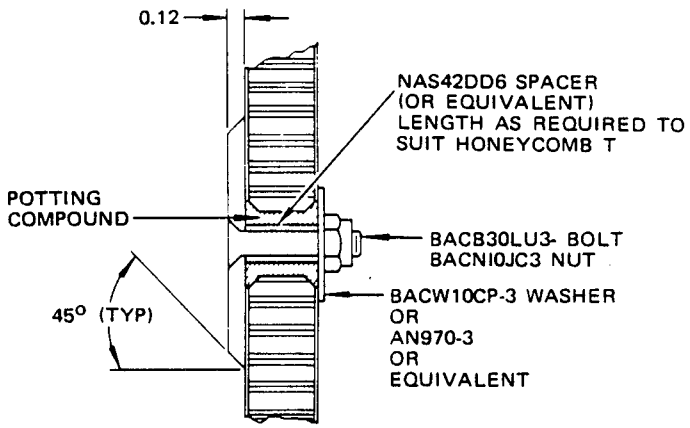

SECTION A-A

FEED REWORK FOR TIME-LIMITED REPAIRS

ADF Sense Antennas
Figure 6

NOTES

- [A] REPAIR THE SURFACE AND ADD AN EXTERNAL FEED
- [B] REPAIR THE SURFACE
- [C] THE REPAIR CAN BE DEFERRED
- [D] IF YOU REMOVE AND REPLACE THE ANTENNA FEED STUD, THEN APPLY A FILLET SEAL OF BMS 5-95 SEALANT TO BOTH THE EXTERNAL AND INTERNAL AREAS.

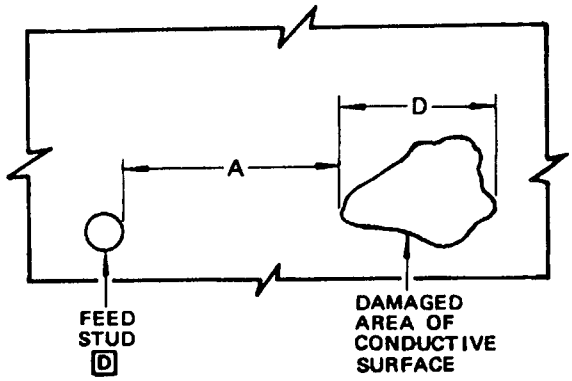

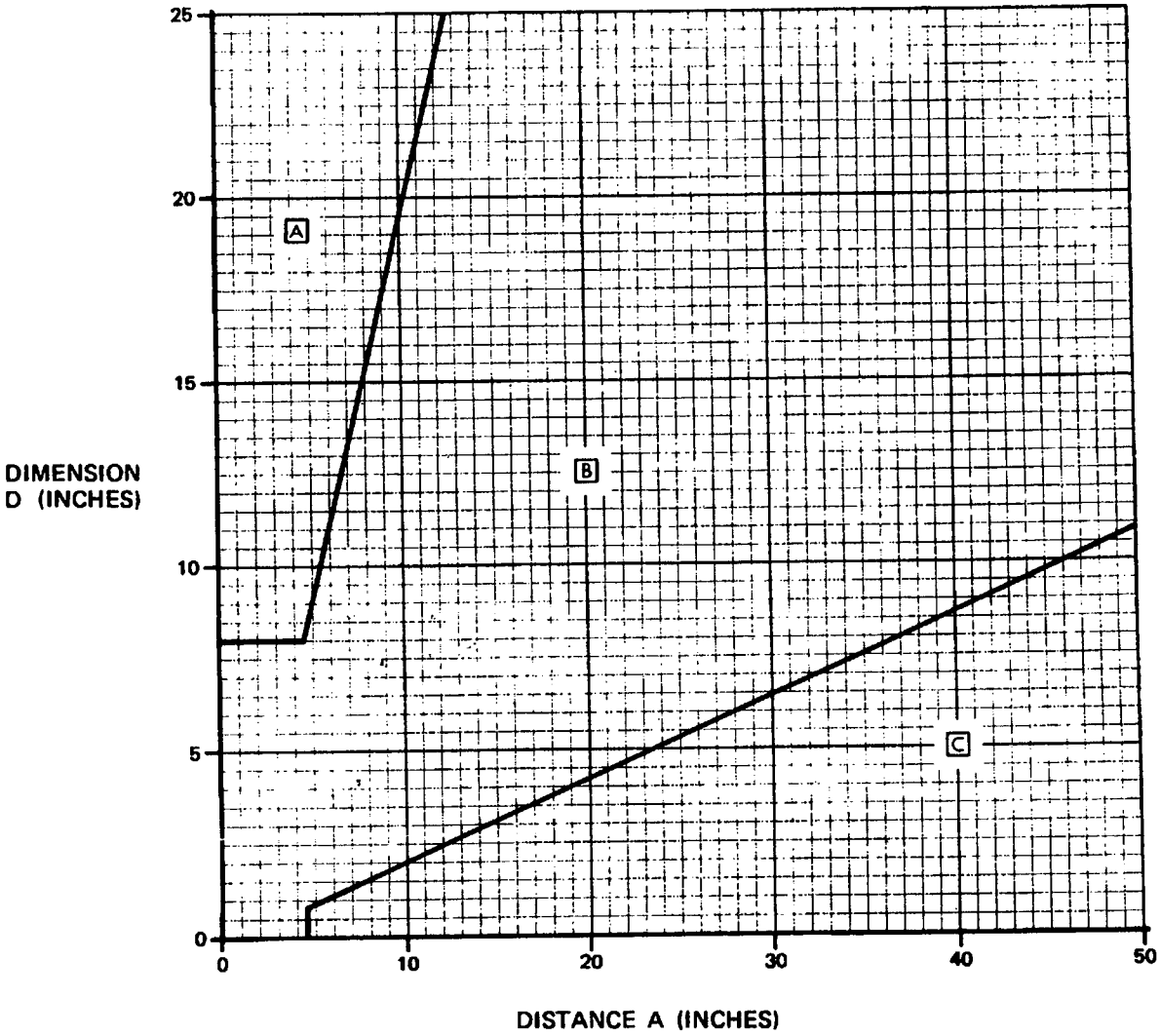

ADF Sense Antennas, Repair Requirements
Figure 7

TABLE A

RESIN	RATIO BY WEIGHT	POT LIFE
EPO TEK 417F Part A Part B	30 0.9	4 hrs

TABLE B

Curing Time for Resin in Table A	
TEMP	TIME
160°F Max 140 75	30-40 Min 40-60 Min 24-48 HOURS

Preparation and Curing Times of Silver Epoxy Resin
Figure 8

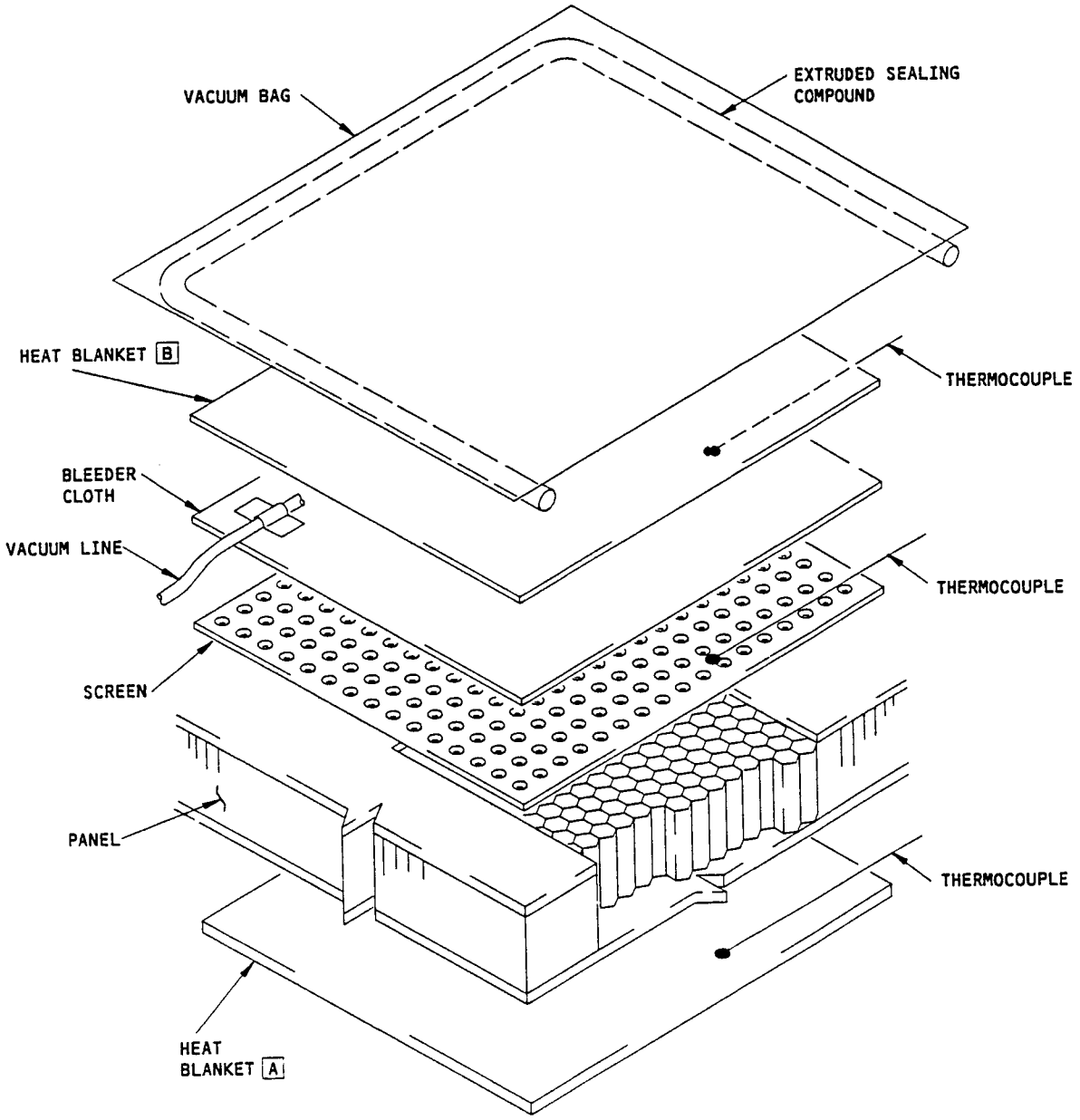

NOTES

A PREFERRED LOCATION OF HEAT BLANKET WHEN OPPOSITE FACE IS ACCESSIBLE

B ALTERNATE LOCATION OF HEAT BLANKET WHEN OPPOSITE SIDE IS INACCESSIBLE. THIS LOCATION MAY BE USED FOR AN ADDITIONAL HEAT BLANKET TO ACCELERATE WATER REMOVAL

Water Removal From Honeycomb Sandwich
Figure 9

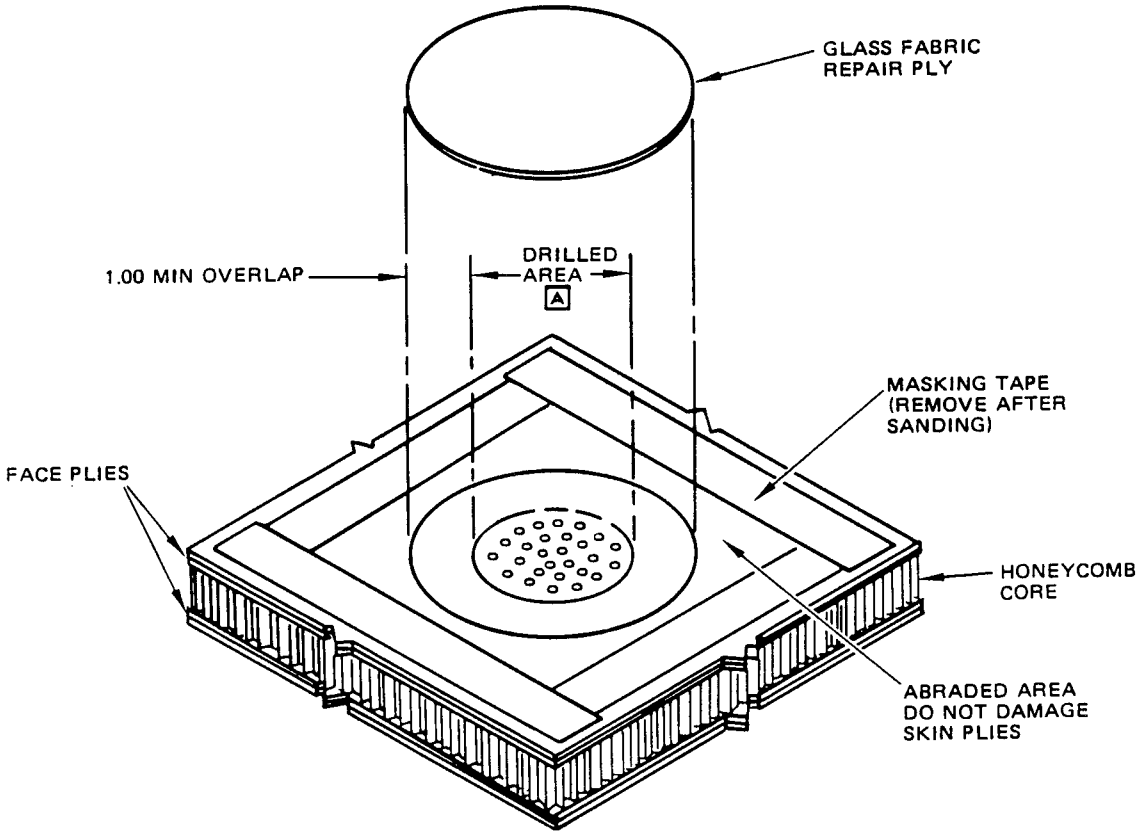

A DRILLED AREA 20 INCHES
DIAMETER MAXIMUM

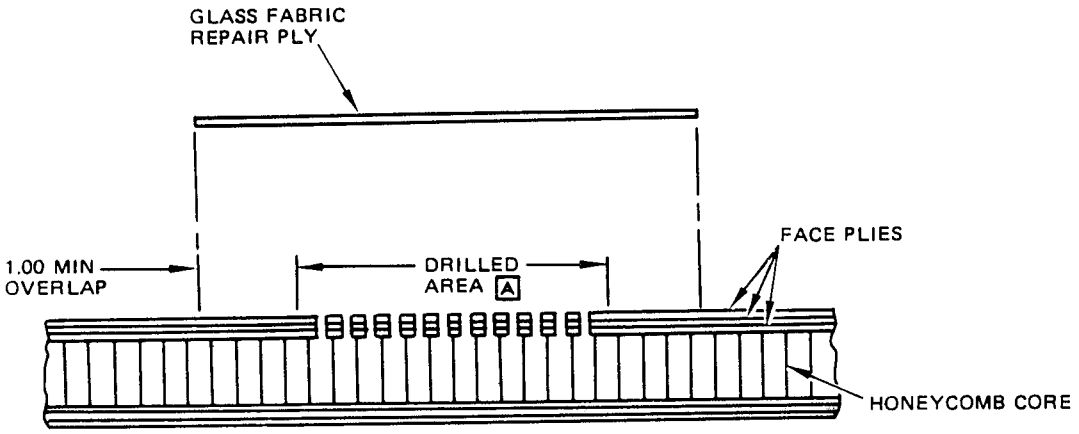

SECTION THROUGH REPAIR

Repair of Honeycomb Sandwich After Water Removal
Figure 10

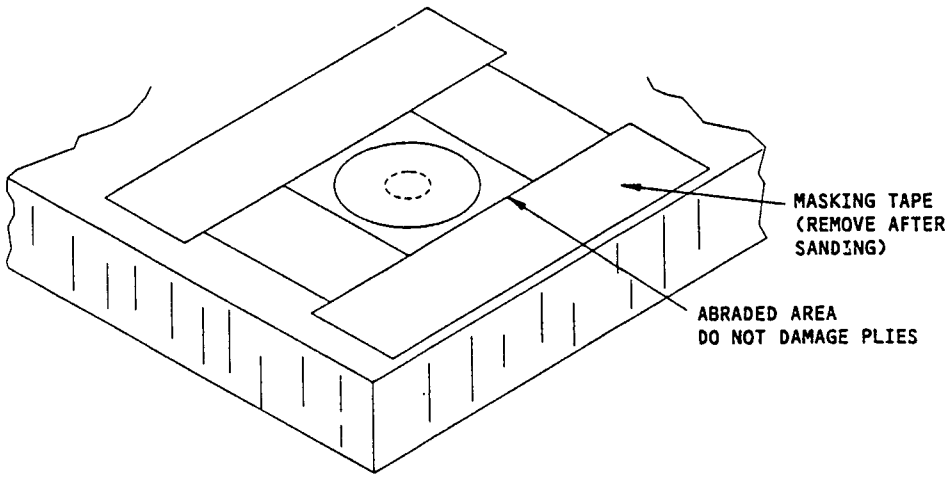

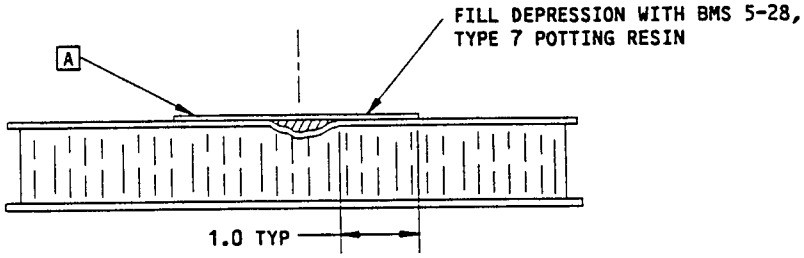

NOTES

A PREPARE AND APPLY ONE PLY OF BMS 9-3, TYPE H-2 OR H-3 GLASS FABRIC PER PAR. 4.E. ORIENTATION IS TO BE THE SAME AS THE ORIGINAL SURFACE PLY

Repair of Dents
Figure 11

ALUMINUM-FACED PAPER HONEYCOMB STRUCTURE REPAIR FOR GALLEYS

1. General

A. The allowable damage limits and repairs given in this subject will not have an effect on a Structurally Significant Item (SSI) given in SRM 51-00-4, Fig. 3. Thus, no change to the Supplemental Structural Inspection Document (SSID) inspection program is necessary

B. Airplane galleys are installed in airplanes to the operator's requirements. In some instances these galleys are furnished by the operator and other instances by The Boeing Company. It is not practicable, therefore, for this document to identify the materials used in galley construction. However, aluminum-faced paper honeycomb panels were commonly used until it was found that they were susceptible to moisture damage. Because of this possible deterioration, operators should make themselves aware from vendor's drawings where paper honeycomb has been used in galley construction and establish inspection intervals based on their experience with this material.

C. To ensure the structural integrity of the galley structure, the paper honeycomb panels should be inspected for physical damage, delamination, and damage by moisture which can cause corrosion and deterioration of the core. Delamination can be detected visually, by coin tap, or by the use of the NDT methods described in NDT Part 1, 51-04-00. Water contained in the honeycomb core can be detected by X-ray if necessary.

D. For allowable damage data and repair index see Fig. 1. Due to the variations in galley design, the limitations and repairs given in the subject are typical. The most severe limitations are imposed in the vicinity of the attachments to the basic airplane structure and at panel edges and panel joints.

2. Removal of Moisture

A. Moisture can only be removed effectively from the honeycomb core by removing the portion of one of the skins over the affected area. Frequently, deterioration of the core will necessitate removal. If the core is structurally satisfactory, the wetted area may still be removed or alternatively be dried by means of a flow of warm air.

3. Repair of Dents

A. Dents exceeding the allowable damage limitations given in Fig. 1 will probably have damaged the core necessitating a repair to the skin and core as described in par. 4.

B. Dents not exceeding the allowable damage limits do not require repair, but where appearance necessitates it, they may be filled as follows:

(1) Remove the paint or decorative finish.

(2) Clean the area as described in par. 9.

BOEING PROPRIETARY - Copyright © - Unpublished Work - See title page for details.

(3) Apply potting compound mixed as described in par. 11 to the depressed area.

(4) Allow the potting compound to cure. This may be accelerated by the application of heat which must not exceed 125°F. Refer to par. 10 for cure times.

(5) Sand the potting compound to provide a smooth surface.

(6) Refinish the repair as described in par. 8.

4. Repair of Delaminated Areas

A. If there is evidence of moisture in the honeycomb core, removal of the delaminated portion of skin to permit moisture removal, and repair in accordance with par. 5, is the only practical solution.

B. Delaminated areas of panels which are not adjacent to a panel edge may be repaired as follows:

(1) Drill a hole 0.125-inch diameter at each extremity of the delaminated area.

(2) Inject adhesive, mixed as described in par. 10, into one hole until it comes out of the other hole.

(3) Fill the 0.125-inch diameter holes with the adhesive.

(4) Apply pressure up to 10 psi and allow the adhesive to cure. Accelerated curing may be achieved by the application of heat not exceeding 125°F. Refer to par. 10 for cure times.

(5) Restore the finish as described in par. 8.

C. Delaminated areas of panels which extend to a free edge may be repaired as follows:

(1) Inject adhesive, mixed as described in par. 10, between the delaminated skin and honeycomb core. If necessary, utilize the method described in par. 4.B.

(2) Apply pressure up to 10 psi and allow the adhesive to cure. Accelerated curing may be achieved using heat not exceeding 125°F. Refer to par. 10 for cure times.

(3) Make the corrosion resistant steel capping channel shown in Fig. 2.

(4) Clean the mating surfaces of the panel and capping channel as described in par. 9.

(5) Install the capping channel with a faying surface seal of the sealant described in par. 7. Form a fillet of sealant at the edges of the channel.

(6) Restore the finish as described in par. 8.

5. Repair to Skin and Core

A. The procedure described in this paragraph may be adapted to repair either one or both skins and the honeycomb core. Refer to Fig. 3 and proceed as follows:

(1) Remove the damaged skin with a hole saw or router. If an undamaged skin is being cut to provide access for a core repair or moisture removal, it is preferable to remove the inner skin.

(2) Remove the damage portion of core.

(3) Make the replacement portion of core from Nomex honeycomb of the same cell size and density as the existing core.

(4) Make the filler and doubler shown in Fig. 3. Use the same material and thickness as the original skin for the filler, but one gage heavier for the doubler.

(5) Remove the finish from the panel over the area to be covered by the doubler.

(6) Clean the mating surfaces of all repair parts and the existing panel as described in par. 9.

(7) Install the repair parts with adhesive, mixed as described in par. 10. It will be necessary to apply adhesive to both the existing core and the replacement portion to ensure a good butt splice.

(8) Form a fillet at the edge of the doubler using the adhesive squeezed out.

(9) Apply pressure up to 10 psi and cure the adhesive. Accelerated curing may be achieved by using heat not exceeding 125°F. Refer to par. 10 for cure times.

(10) Restore the finish as described in par. 8.

6. Panel Replacement

A. When a panel is damaged beyond repair it should be replaced by a panel with similar physical characteristics as the original. The core material need not be paper honeycomb provided that the cell size and core density are comparable to the original. Refer to Fig. 4 and proceed as follows:

(1) Remove the damaged panel with its attaching extrusion and fasteners.

(2) Make a new panel from comparable material.

(3) Make the extruded attachment angles shown in Fig. 4.

(4) Clean the attachment angles and the mating surfaces of the new panel as described in par. 9.

(5) Attach the angles to the new panel, making a faying surface seal with the sealant described in par. 7.

(6) Drill the matching holes in the attachment angles and the existing panel.

(7) Install the inserts in the existing panel as follows:

(a) Drill the appropriate size hole down to, but not contacting the opposite face.

(b) Remove the debris.

(c) Place the insert in position with the axis perpendicular to the panel face and the head flush using the pressure-sensitive, adhesive-coated alignment tab.

(d) Prepare a quantity of the potting compound described in par. 12 and inject it through one hole in the alignment tab. Leave slight excess on the tab to allow for shrinkage.

NOTE: For inserts without alignment tabs, the potting compound should be inserted in the hole before positioning the insert.

(e) Cure the potting compound. Do not place any load on the inserts for 24 hours after curing. Refer to par. 12 for cure times.

(8) Solvent clean the mating faces of the attachment angles and the existing panel.

(9) Install the new panel making a faying surface seal between the angles and the existing panel.

(10) Install a corrosion resistant steel capping channel on any free edges of the new panel as described in par. 4.C.

(11) Seal as described in par. 7.

(12) Refinish the panel as described in par. 8.

7. Sealing

A. Sealing of all fastener holes and edges of panels, doublers, capping channels etc., is essential to exclude moisture which will cause deterioration of the honeycomb core and adhesive. This sealing should be repaired if at any time it will not ensure satisfactory exclusion of moisture.

B. The sealant recommended for use is PR1436G which is a two part, dichromate cured polysulphide material, which should be thoroughly mixed before use as follows:

(1) Measure out the correct amount of base compound and accelerator into separate containers.

(2) Stir each material in its own container until they reach even consistency.

(3) Stir the accelerator into the base compound and mix thoroughly for 5 to 7 minutes. Scrape sides of container and paddle to ensure thorough mixing of all of the compound. If a mechanical mixer is used, do not exceed 80 RPM.

NOTE: Correct proportions of base compound and accelerator and thorough mixing are extremely important.

C. Before sealant application clean the appropriate surfaces as described in par. 9.

D. Apply the sealant with a spatula or extrusion gun. If a gun is used, hold it almost perpendicular to the work surface. Avoid air bubbles and voids in the sealant. See Fig. 5 for typical examples of sealant application.

8. Finish

A. After completion of repairs the finish should be restored. Normally the interior surfaces are painted with white epoxy, while the exterior surfaces are covered with a decorative sheet of plastic material.

B. Painted surfaces may be restored as follows:

(1) Remove the original finish.

(2) Fill all dents, scratches, edges of doublers, faces of inserts and fastener heads in the manner described in par. 3.

(3) After the potting compound has cured, sand the surfaces to give a smooth finish.

(4) Clean the area as described in par. 9.

(5) Apply BMS 10-11 type 1 or BMS 10-79 epoxy primer.

(6) Apply BMS 10-60 type 1 polyurethane enamel.

C. Surfaces covered with decorative plastic may be restored as follows:

(1) Remove the old adhesive from the panel surface.

(2) Fill all dents, scratches, edges of doublers, faces of inserts and fastener heads in the manner described in par. 3.

(3) After the potting compound has cured, sand the surfaces to give a smooth finish.

(4) Clean the surface as described in par. 9.

(5) Apply the decorative plastic sheet using an adhesive compatible with the type of plastic being used.

9. Cleaning

A. To ensure good adhesion of the sealant or adhesive used in these procedures, clean surfaces are important. To ensure a high degree of cleanliness, proceed as follows:

(1) Clean the surface with clean lint-free cloth moistened with acetone, methyl ethyl ketone or naphtha. Pour the solvent into the cloth because the liquid will become contaminated if the cleaning cloth is dipped into it. Always use clean solvent, not reclaimed material.

(2) Dry the solvent with a clean piece of cloth before it evaporates.

(3) Repeat the cleaning process until soil does not appear on the cloth.

10. Adhesive

A. The recommended adhesive is Scotchweld Structural Adhesive EC2216B/A, Type I which is a two-part adhesive which must be mixed to the manufacturer's instructions. Pot life after mixing is approximately 90 minutes for a 100-gram batch at 75°F. Higher temperatures or larger batches will result in a reduction of pot life.

B. All fasteners should be installed within the pot life of the adhesive.

C. Curing times for the adhesive at varying temperatures are:

Temperature (°F)	Time (Hours)
60	48
80	24
100	12
120	6

11. Potting Compound

A. The recommended potting compound is the adhesive described in par. 10 with 30 parts by weight of phenolic microballoons added.

12. Potting Compound for the Installation of Inserts

A. The following potting compounds are recommended for the wet installation of inserts:

(1) Epocast 8623A/B, Mod. 1, Type 3 which has a work life of 30 minutes at room temperature when mixed as follows:

Epocast 8623A	100 parts by weight
Epocast 8623B	25 parts by weight

(2) Magnabond 79-6, Mod. 2 which has a work life of 35 minutes at room temperature when mixed as follows:

Magnabond 79-6A	100 parts by weight
Magnabond 79-6B	32 parts by weight

(3) Epocast 8623A, Mod. 1, Type 3 with Epocast Hardener #946 which has a work life of 20 minutes at room temperature when mixed as follows:

Epocast 8623A	100 parts by weight
Epocast Hardener #946	14 parts by weight

B. Cure times for the potting compounds are as follows:

(1) Epocast 8623A/B and Magnabond 79-6, 24 hours at 80°F or 5 hours at 110°F

(2) Epocast 8623A with #946 hardener, 3 hours at 75°F

13. Equipment and Materials

A. A recommended unit to provide heat and vacuum for use in making bonded repairs can be obtained from Airline Systems, 6361 First Ave. So., Seattle, Washington 98108. These are the VHB-1000 series vacuum heater blankets and Porta Bonda.

B. Suppliers of material referred to in these procedures are as follows:

Material	Source
BMS 8-124 nonmetallic honeycomb core (various cell sizes and densities)	Hexcel Corporation Coast Manufacturing Div. P.O. Box 668 815 Lawrence Street Lancaster, Ohio 43130 or Hexcel Corporation Coast Manufacturing Div. 11711 Dublin Boulevard Dublin, California 94566
Scotchweld EC2216B/A, Type I structural adhesive	Minnesota Mining and Manufacturing Co. St. Paul, Minnesota 55101
PR1436 sealant	Products Research and Chemical Corp. 2919 Empire Avenue Burbank, California 91504
Phenolic Microballoons BJO-0939	Union Carbide Corporation Chemicals and Plastics Division Bound Brook Plant River Road Bound Brook, New Jersey 08805
Magnabond 79-6, Mod. 2 potting compound	Magnolia Plastics, Inc. 5547 Peachtree Industrial Blvd. Chamblee, Georgia 30005
Epocast 8623A/B, Mod. 1, Type 3 potting compound and Epocast Hardener #946	Furane Plastics, Inc. 5121 San Fernando Road W. Los Angeles, California 90039
Acetone, methyl ethyl ketone or nahptha	Any source

TYPE OF DAMAGE	ALLOWABLE DAMAGE WITHOUT REPAIR		REPAIR INDEX
	AREAS OF PANELS EXCLUDING THE BASE, AREA OF UPPER ATTACHMENTS AND AREAS WITHIN 2 INCHES OF EDGE, JOINTS, INTERSECTIONS OR FASTENERS	BASE, AREA OF UPPER ATTACHMENTS, PANELS WITHIN 2 INCHES OF EDGE, JOINTS, INTERSECTIONS OR FASTENERS	
SCRATCHES	ALLOWED IF THERE ARE NO CRACKS. BLEND OUT AND ALODIZE SCRATCHES WHICH PENETRATE THE CLADDING		
DENTS	ALLOWED PROVIDED THAT THEY ARE NOT MORE THAN 3 INCHES ACROSS THE MAJOR AXIS, NOT DEEPER THAN 10% OF THE PANEL THICKNESS AND THE WIDTH TO DEPTH RATIO IS NOT LESS THAN 20:1	NOT ALLOWED	REFER TO PAR. 3 [A]
PUNCTURES	PUNCTURES WHICH MAY BE DRILLED OUT TO 0.50 INCH DIA ARE PERMITTED PROVIDED THEY ARE FILLED WITH POTTING COMPOUND. REFER TO PAR. 11.	NOT ALLOWED	REFER TO PAR. 5 [A]
DELAMINATION	NOT ALLOWED EXCEPT FOR HORIZONTAL INTERIOR SHELVES WHERE DELAMINATED AREA DOES NOT EXCEED 20% OF SHELF AREA	NOT ALLOWED	REFER TO PAR. 4 [A]
CRACKS	NOT ALLOWED WITHIN 10 INCHES OF BASE, OTHERWISE ALLOWED PROVIDED THEY DO NOT EXCEED 3.0 INCHES IN LENGTH, ARE STOPPED WITH 0.25 INCH DIA HOLES AT THE EXTREMITIES AND FILLED WITH POTTING COMPOUND. REFER TO PAR. 11.	NOT ALLOWED	REPAIR AS FOR PUNCTURE. REFER TO PAR. 5 [A]
EXTENSIVE DAMAGE	NOT ALLOWED	NOT ALLOWED	REFER TO PAR. 6 [A]

[A] FOR ALL REPAIRS TO BASE, AREA OF UPPER ATTACHMENTS, PANELS WITHIN 2 INCHES OF JOINTS, INTERSECTIONS OR FASTENERS, REFER TO THE BOEING COMPANY FOR DISPOSITION.

Allowable Damage and Repair Index
Figure 1 (Sheet 1)

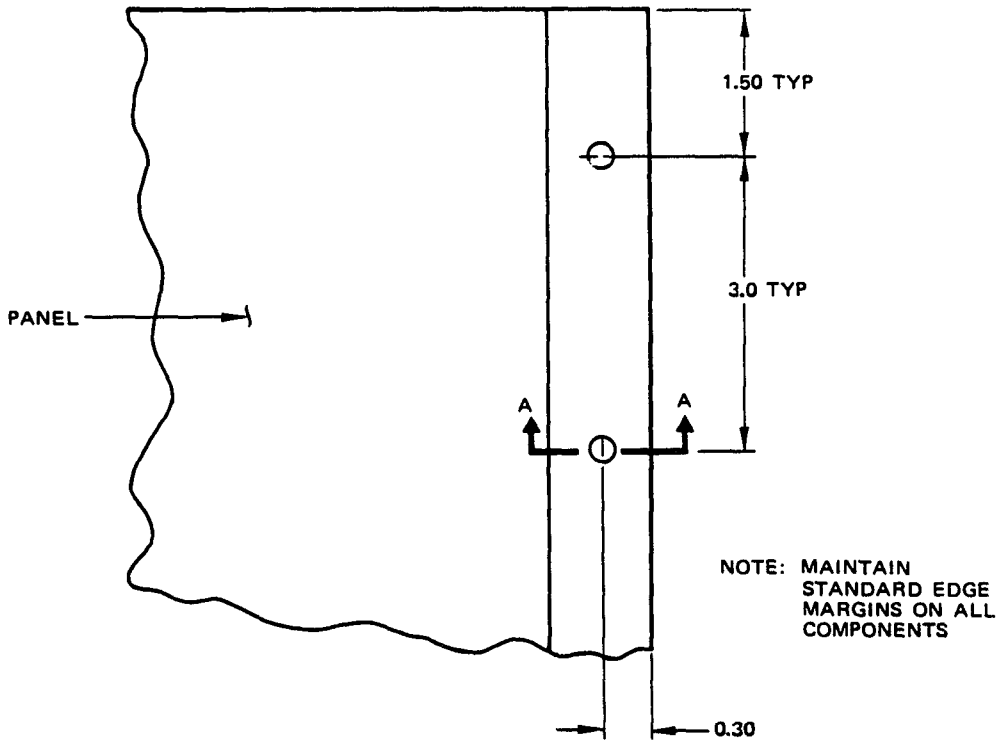

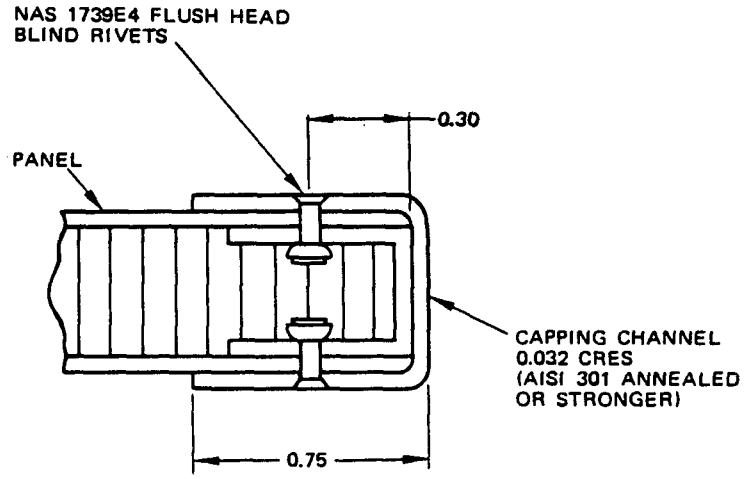

SECTION A–A

NOTE: REFER TO PAR. 4 FOR TEXT FOR ADDITIONAL DETAILS

Repair to Delaminated Free Edge of Panel
Figure 2

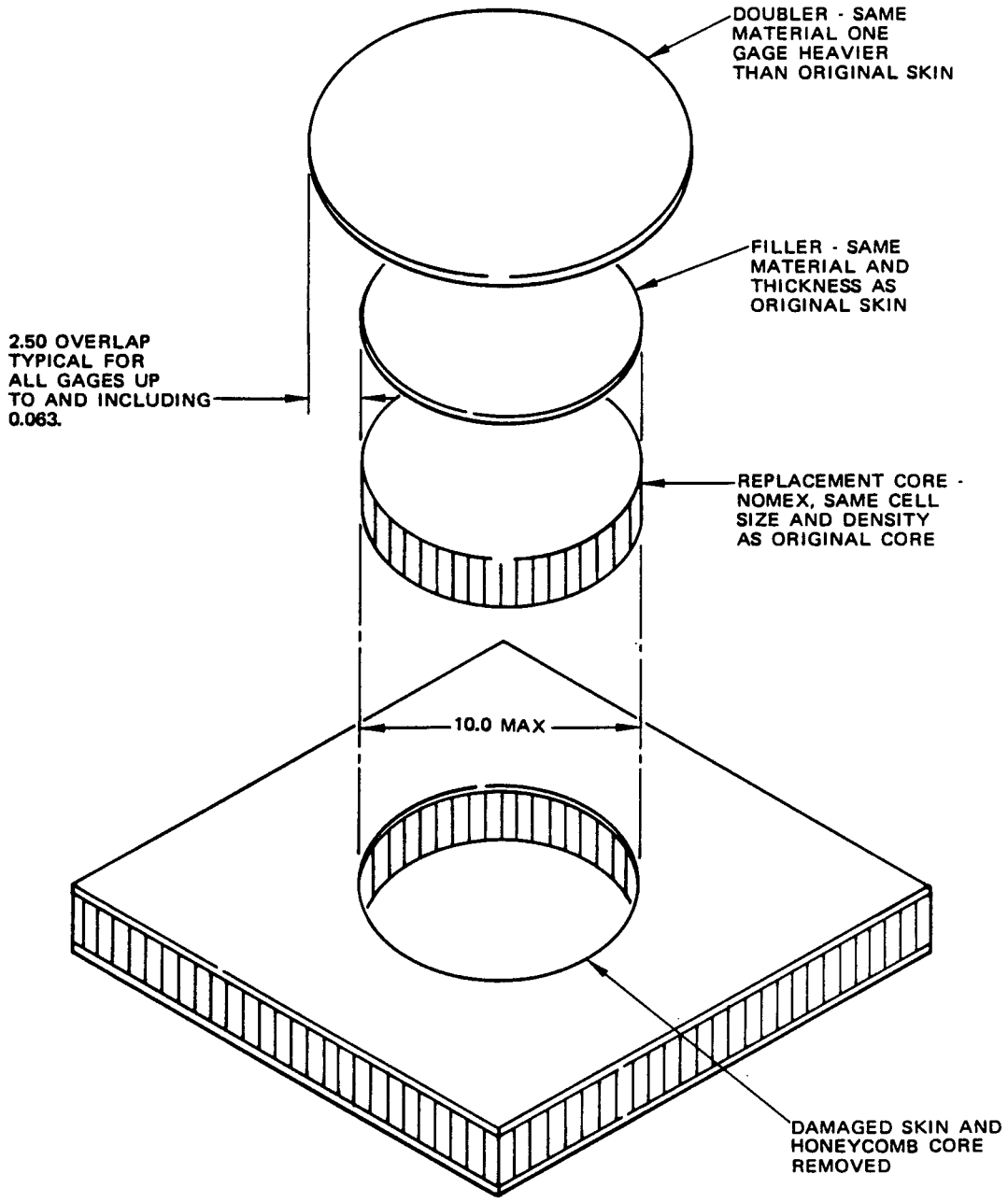

NOTE: REFER TO PAR. 5 OF TEXT FOR ADDITIONAL DETAILS

Repair to Skin and Core
Figure 3

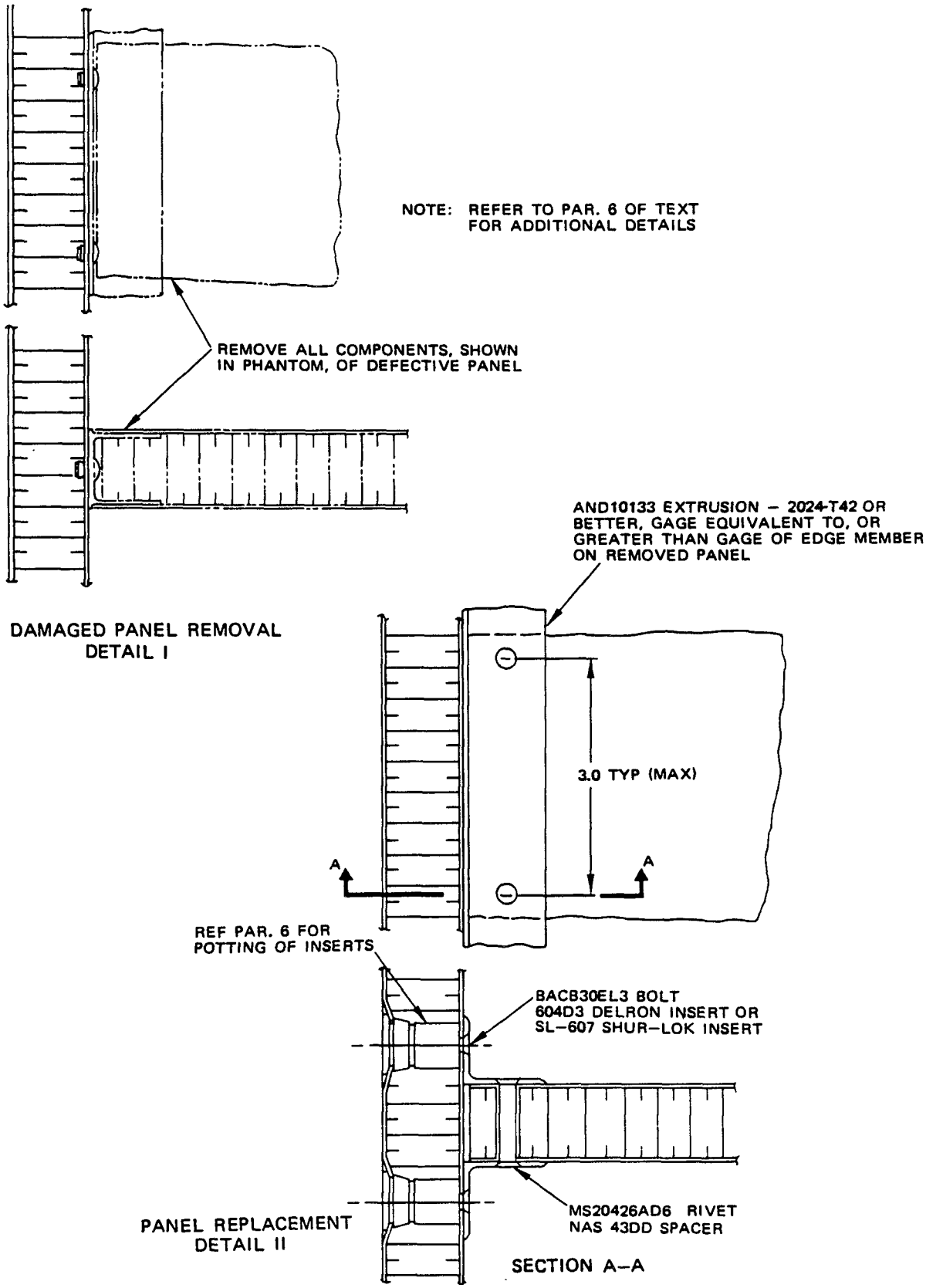

Replacement of Damaged Panel
Figure 4

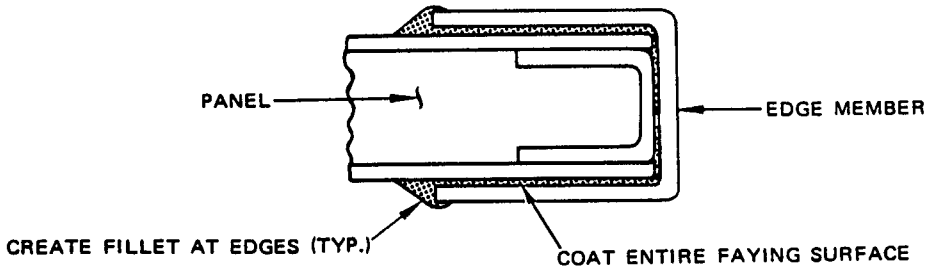

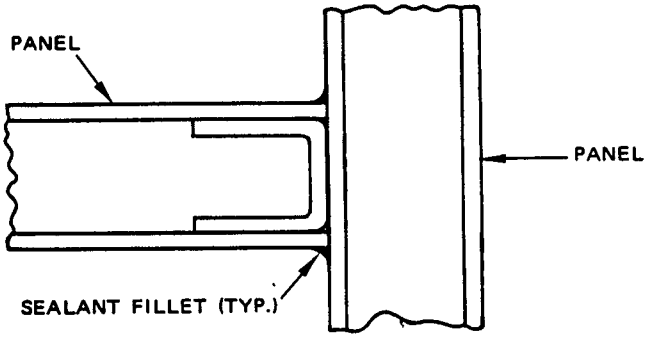

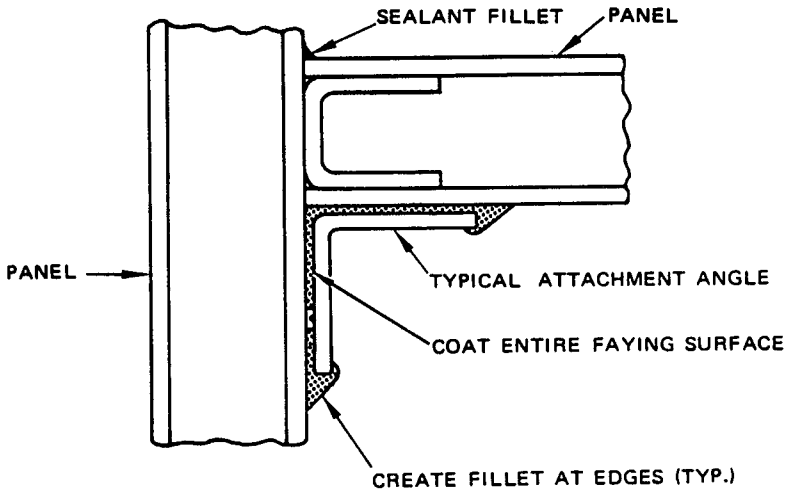

NOTE: REFER TO PAR. 7 OF TEXT FOR ADDITIONAL DETAILS.

Typical Sealant Applications
Figure 5

POLYIMIDE ACOUSTIC PANEL REPAIRS

1. General

   A. These repairs will not have an effect on a Structurally Significant Item (SSI) given in SRM 51-00-4, Fig. 3. Thus, no change to the Supplemental Structural Inspection Document (SSID) inspection program is necessary.

   B. Polyimide acoustic panels are sandwich construction panels that consist of face plies of polyimide glass fabric bonded to a fiberglass honeycomb core. This subject describes repairs to the core and laminates of the face plies.

   C Table I lists repairs that can be accomplished without removing the panel from the airplane.

   D. Table II lists more extensive repairs which would require the removal of the panel from the airplane.

   E. The most common repair material used on fiberglass panels is an epoxy potting compound, BMS 5-28, Type 6, resin mix "A". Coloring materials are added if required for decorative purposes. Refer to resin mix tables for mixing ratios.

   F. A maximum of 75 square inches total can be repaired in any one cowl acoustic sandwich inlet panel, any repair in excess of this will affect the acoustic quality of the panel

   G. Damage is defined as any visible change on the surface resulting from delamination, erosion, dents, gouges, punctures and holes.

   H. Allowable Damage· Scratches are allowable if no cracking of the surface is evident.

2. Repair Procedures

   A. Make the repair by following the instructions in the applicable repair figure.

   B. Special materials and tools for honeycomb repairs are listed in SRM 51-40-6.

3. Preparation of Damage Area

   A. Determine extent of damage.

      (1) Check panel in vicinity of damage for entry of water or other foreign matter.

BOEING PROPRIETARY - Copyright © - Unpublished Work - See title page for details.

(2) Check for delamination of skin from honeycomb core around cracks and holes.

NOTE: Delamination can be detected by instrumental nondestructive inspection (NDI) methods or by tap test. For the tap test, use a solid metal disk and tap the repair area lightly, but firmly. Void areas will give a dull sound. Solidly bonded areas will give a sharp ring. Refer to Part 1 of the Nondestructive Test Manual.

B. Trim out damage.

(1) If honeycomb core has been damaged, remove the damaged portion of the core to a smooth outline including areas contaminated by water that cannot be dried by heating. Use clean dry compressed air to accelerate the drying process. Make all cutouts with a minimum 0.50-inch corner radius.

WARNING: SANDING PRODUCES A FINE DUST THAT CAN CAUSE SKIN IRRITATION. INHALING THESE FINE DUST PARTICLES CAN BE INJURIOUS TO THE LUNGS. OBSERVE EXTREME PRECAUTIONS FOR SKIN AND RESPIRATORY SYSTEM PROTECTION.

CAUTION: DO NOT PROCEED WITH THE REPAIR UNTIL THE AFFECTED CELLS ARE COMPLETELY DRY.

(2) Damage to the inside diameter surface of the panel can be repaired by filling with potting compound, RESIN MIX A. The finished surface to be flushed with the surrounding skin to obtain a smooth aerodynamic surface (Fig. 1).

4. Honeycomb Core Repair

A. Potted core plug.

(1) Clean out the damage area thoroughly using oil and water-free compressed air and wipe surfaces with a clean soft, lint-free cloth moistened with solvent, Series 91 (Ref AMM/SOPM 20-30-91). Repeat solvent cleaning until all foreign soil has disappeared.

(2) Fill cleaned out area in honeycomb core with potting compound. Resin mix A.

B. Skin separation from core.

(1) Pierce loose plies and inject resin mix B into delaminated plies, apply pressure to squeeze resin through porous skin. Allow to gel for 1 hour at room temperature.

PARTS BY WEIGHT	INGREDIENT	SOURCE
100.00	RESIN EPOCAST 8067 OR 33-A	FURANE PLASTICS 5121 SAN FERNANDO ROAD WEST LOS ANGELES, CALIF. 90039
6.50	HARDENER 9216	
2.00	PHIL BLACK "E"	PHILLIPS CHEMICAL CO. P.O. BOX 800 PASADENA, TEXAS 77501
10.00	COLORING '187' BROWN OXIDE IRON OXIDE CONTENT 95% OR EQUIVALENT	PFIZER INC. 235 E 42ND ST. NEW YORK, N.Y. 10017

RESIN MIX "A"

100.00	EPON 828	SHELL CHEMICAL CO. 50 W. 50TH ST. NEW YORK, N.Y. 10020
12.00	HARDNER 9216	FURANE PLASTICS, INC. 5121 SAN FERNANDO ROAD WEST LOS ANGELES, CALIF. 90039
3.00	PHIL BLACK "E"	PHILLIPS CHEMICAL CO. P.O. BOX 800 PASADENA, TEXAS 77501
10.00	COLORING "187" BROWN OXIDE IRON OXIDE CONTENT 95% OR EQUIVALENT	PFIZER INC. 235 E 42ND ST. NEW YORK, N.Y. 10017

RESIN MIX "B"

DAMAGE	SIZE LIMITATION	ACTION
1. CRACKS	REPAIR UP TO 3.00-INCH LENGTH FOR ONE SKIN	USE RESIN MIX "A" AND REPAIR PER FIG. 2
A. EITHER SKIN	REPAIR UP TO 2.00-INCH LENGTH FOR BOTH SKINS	USE RESIN MIX "A" AND REPAIR PER FIG. 2
2. DELAMINATION		
A. EITHER SKIN	UP TO 6.00 SQUARE-INCHES	PIERCE LOOSE PLIES. INJECT RESIN MIX "A" INTO DELAMINATIONS AND APPLY PRESSURE TO SQUEEZE RESIN THROUGH POROUS SKIN AND ALLOW TO GEL FOR 1 HOUR MINIMUM

TABLE I
ON - THE AIRPLANE REPAIRS

DAMAGE	SIZE LIMITATION	ACTION
1. PUNCTURES		
A. THROUGH ONE SKIN	UP TO 12 SQUARE-INCHES ANY ONE PUNCTURE. TOTAL UP TO 75 SQUARE-INCHES ON PANEL. MAX LENGTH IN ANY DIRECTION NOT TO EXCEED 6.0 INCHES.	USE RESIN MIX "A"
B. THROUGH BOTH	UP TO 6 SQUARE-INCHES FOR ANY ONE PUNCTURE. TOTAL UP TO 75.0 SQUARE-INCHES ON PANEL. MAX LENGTH IN ANY DIRECTION NOT TO EXCEED 6 INCHES	USE RESIN MIX "A"
2. DELAMINATION		
A. CORE TO OUTSIDE DIA SKIN	UP TO 75.00 SQUARE-INCHES	USE RESIN MIX "B" AND REPAIR AS DESCRIBED IN CHAPTER 4.B.(1)
B. WITHIN SKIN	UP TO 75.00 SQUARE-INCHES	USE RESIN MIX "B" AND REPAIR AS DESCRIBED IN CHAPTER 4.B.(1)
3. EDGEBAND DAMAGE		
A. CRACKED OR BROKEN	10% OF TOTAL EDGEBAND LENGTH. MAX SINGLE DAMAGE NOT TO EXCEED 6 INCHES	USE RESIN MIX "B" FOR MAJOR DAMAGE AND RESIN MIX "A" FOR MINOR DAMAGE REPAIR PER FIG. 4
B. GOUGES AND INDENTATIONS	UP TO 50% EDGEBAND THICKNESS NOT EXCEEDING 6.00 INCHES LONG	USE RESIN MIX "A" AND REPAIR PER FIG. 4
C. DELAMINATION		USE RESIN MIX "A" AND REPAIR PER FIG. 3

TABLE II
OFF-THE AIRPLANE REPAIRS

REPAIR INSTRUCTIONS

1. Trim out damage, see detail I for core and skins and detail II for skin only, as described in par. 3.B.(1).

2. Repair damage with Resin Mix "A" as described in par. 3.B.(2).

3. Allow mixture to gel for 1 hour at room temperature. Further curing for 1 hour at 350° improves mechanical properties.

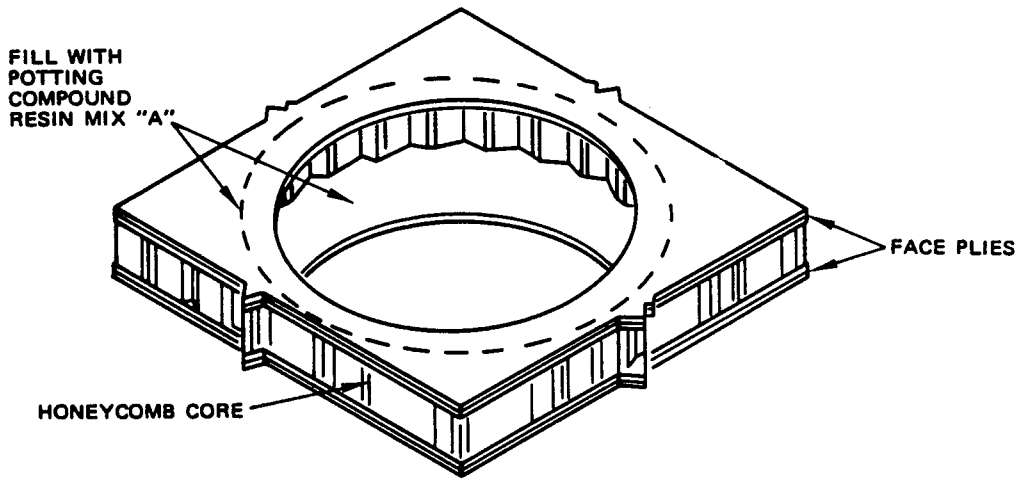

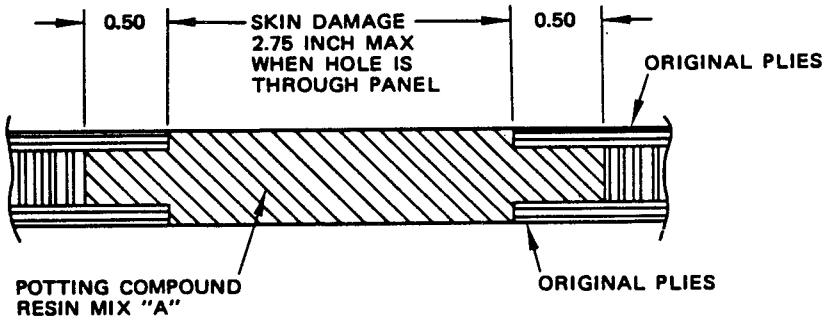

SECTION THROUGH REPAIR OF SKINS AND CORE
DETAIL I

Potted Filler Repair
Figure 1 (Sheet 1)

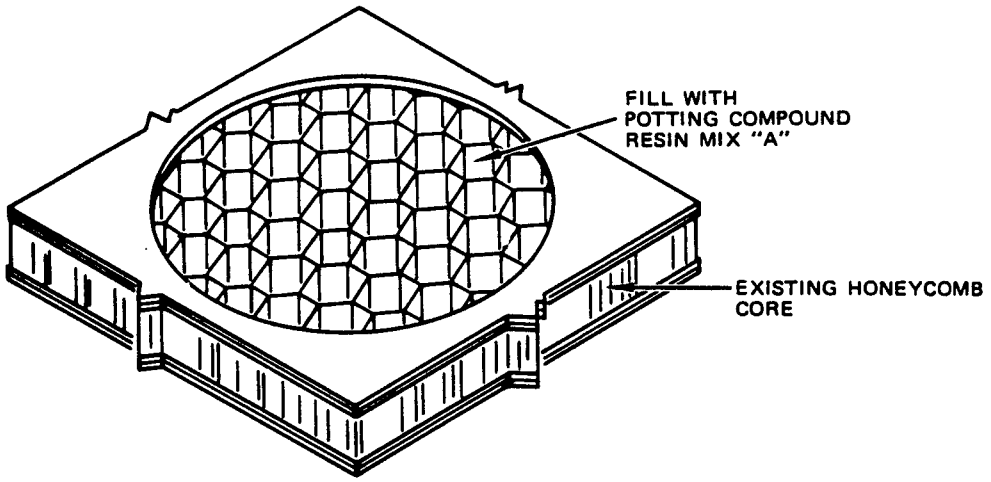

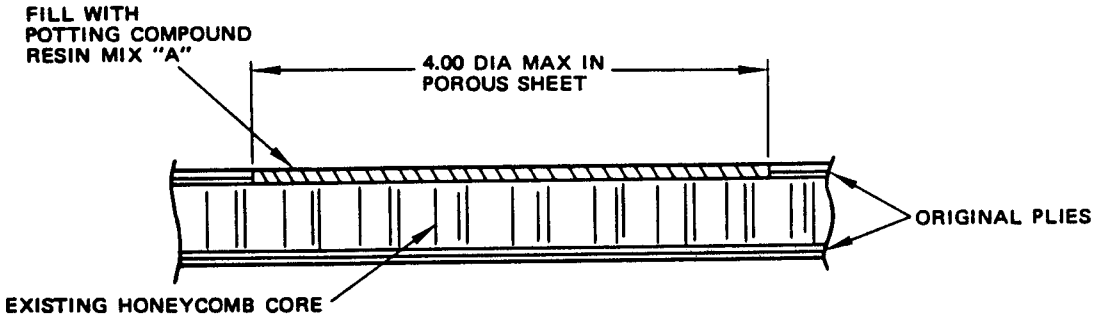

SECTION THROUGH REPAIR OF SKIN ONLY
DETAIL II

Potted Filler Repair
Figure 1 (Sheet 2)

REPAIR INSTRUCTIONS

1. Stop drill crack with 0.187-inch dia holes at extremities and at abrupt changes of direction.

2. If skin is not delaminated, fill crack and stop holes with Resin Mix "A."

3. If skin is delaminated, inject Resin Mix "B" into skin and apply pressure to force resin through skin pores. Allow resin to gel for 1 hour minimum at room temperature.

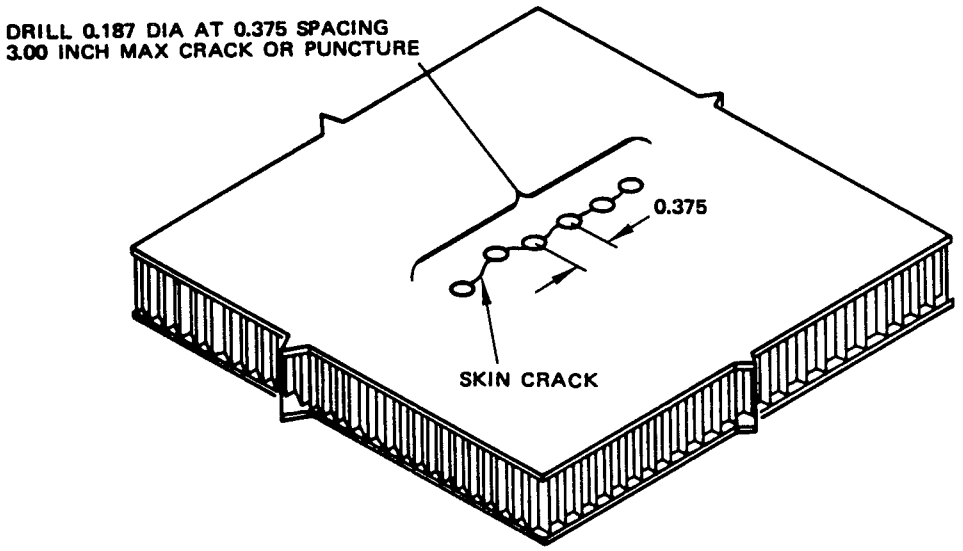

Skin Crack Repair
Figure 2

REPAIR INSTRUCTIONS

1. Carefully open delaminated edgeband plies without damage to sound bonds and inject Resin Mix "A."

2. Apply clamp pressure and cure at room temperature for 1 hour. Further curing at 350° improves mechanical properties.

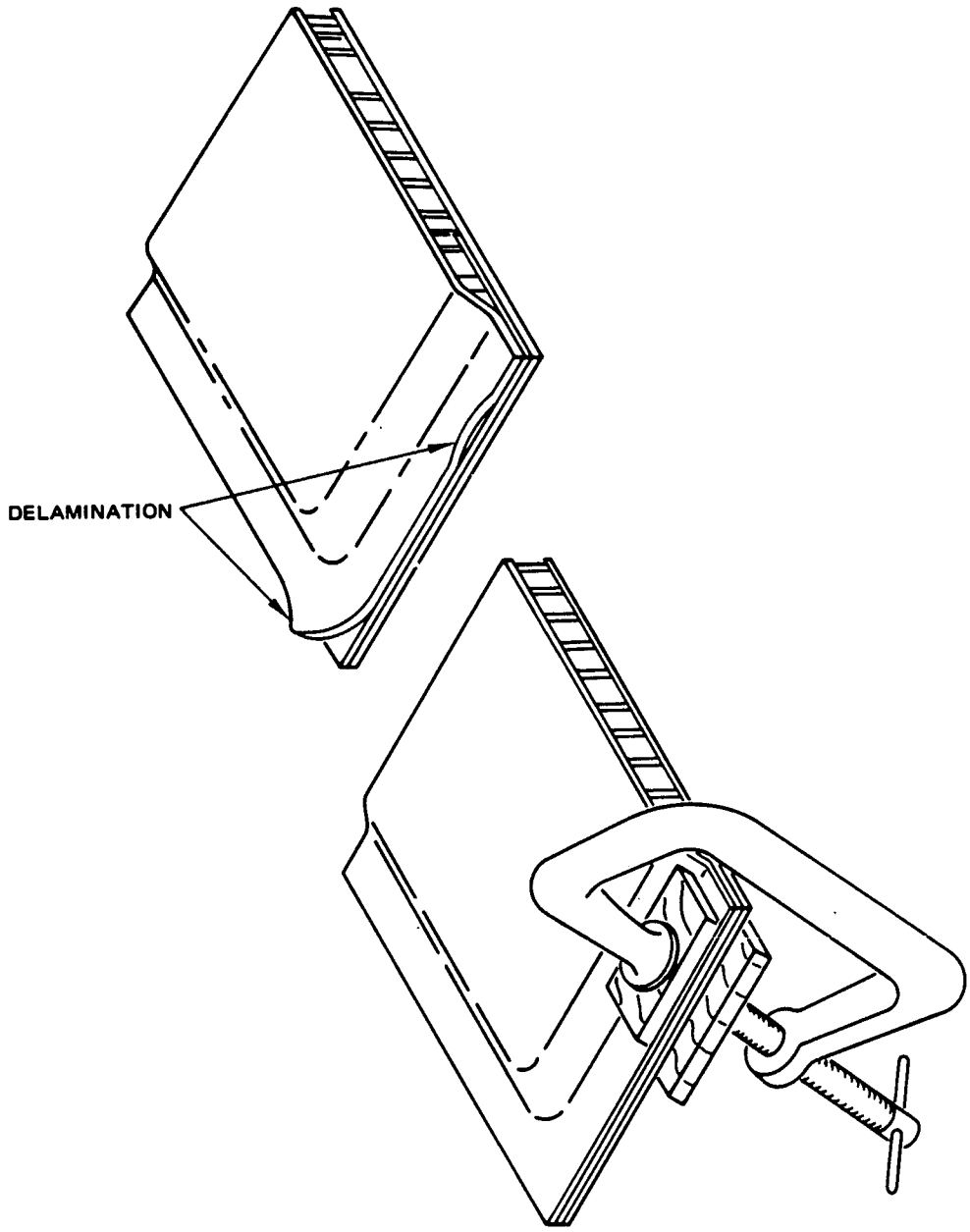

Delaminated Edgeband Repair
Figure 3

REPAIR INSTRUCTIONS

1. Stop drill cracks with 0.25 dia. drill.

2. Scarf by sanding to dimensions shown.

3. Clean the sanded area as described in par. 4.A.(1).

4. Fill the cleaned out area with potting compound, Resin Mix "A" and fair to a smooth surface.

5. Allow mixture to gel for 1 hour at room temperature. Further curing at 350° for 1 hour improves mechanical properties.

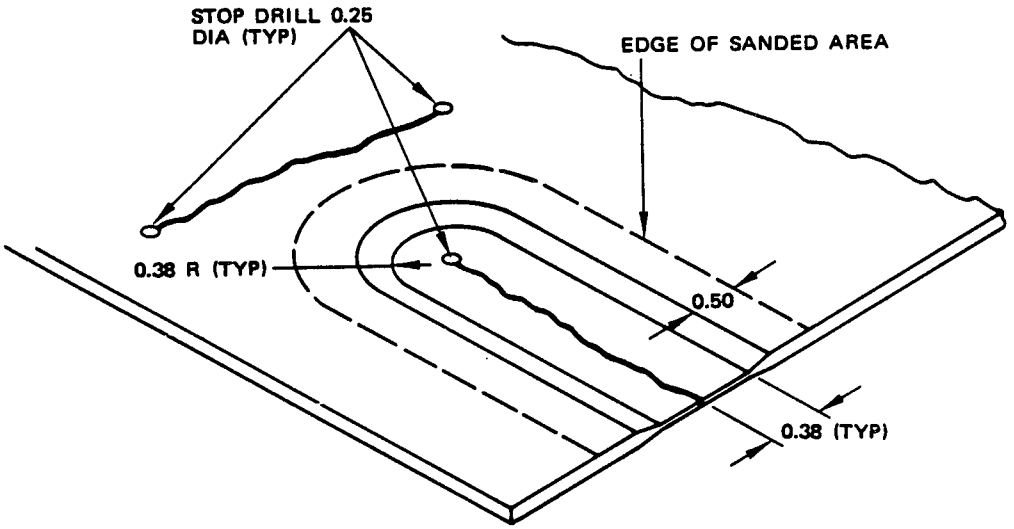

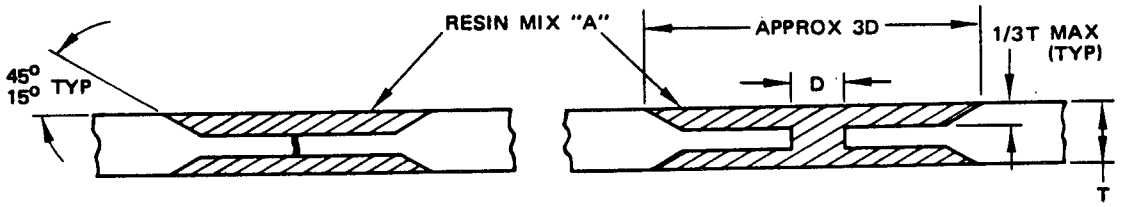

SECTION THROUGH REPAIRED CRACK

SECTION THROUGH REPAIRED HOLE

MAJOR DAMAGE

Repairs to Holes and Cracks of Edgeband
Figure 4

GRAPHITE, ARAMID, AND GRAPHITE/ARAMID/GLASS FABRIC HYBRID REINFORCED EPOXY LAMINATES AND NONMETALLIC HONEYCOMB SANDWICH REPAIRS - ROOM TEMPERATURE CURE (WET LAYUP)

1. General

A. These repairs will not have an effect on a Structurally Significant Item (SSI) given in SRM 51-00-4, Fig. 3. Thus, no change to the Supplemental Structural Inspection Document (SSID) inspection program is necessary.

WARNING: SOME EQUIPMENT USED FOR HEAT CURING REPAIRS MAY CONSTITUTE A FIRE OR EXPLOSION HAZARD WHEN USED IN THE VICINITY OF AN AIRPLANE WHICH CONTAINS, OR HAS CONTAINED FUEL. CONSULT THE LOCAL FIRE DEPARTMENT FOR AUTHORITY TO USE SPECIFIC EQUIPMENT. NONCOMPLIANCE COULD CAUSE PERSONNEL INJURY.

BREATHING VAPORS OR ALLOWING SOLVENT TO CONTACT SKIN OR EYES IS HAZARDOUS. WEAR NEOPRENE GLOVES WITH COTTON LINERS, PROTECTIVE CLOTHING, AND EYE GOGGLES. IF CHEMICAL CONTACT OCCURS, WASH THOROUGHLY WITH WATER. IF CHEMICAL SHOULD SPLASH INTO EYES, FLUSH EYES WITH LARGE QUANTITIES OF WATER AND SEEK MEDICAL AID. USE MECHANICAL VENTILATION OR RESPIRATORY PROTECTION WHEN WORKING IN A CONFINED SPACE OR AREA.

DO NOT BREATHE CARBON FIBER DUST. MAKE SURE THAT THERE IS A GOOD FLOW OF AIR WHERE YOU DO THE WORK. USE EQUIPMENT TO HELP YOU BREATHE WHEN YOU WORK IN A CONFINED SPACE. USE A VACUUM NEAR THE SOURCE OF THE DUST TO REMOVE THE DUST FROM THE AIR. IF YOU DO NOT OBEY, YOU CAN CAUSE INJURY.

CAUTION: FASTENERS INSTALLED IN GRAPHITE COMPOSITE STRUCTURE MUST BE BARE OR BMS 10-85 COATED TITANIUM, OR CORROSION RESISTANT STEEL. CADMIUM PLATED CORROSION RESISTANT STEEL MAY ALSO BE USED. ALUMINUM OR ALLOY STEEL FASTENERS ARE NOT ALLOWED IN GRAPHITE COMPOSITE STRUCTURES

WHEN REINSTALLING ALUMINUM FITTINGS ON GRAPHITE COMPOSITE STRUCTURE, ENSURE THAT THE ORIGINAL CORROSION PROTECTIVE TREATMENT IS MAINTAINED. INSTALL FITTINGS WITH FAYING SURFACE SEAL USING BMS 5-26 IN FUEL TANK AREAS OR BMS 5-95 IN ALL OTHER AREAS.

DO NOT LET CARBON FIBER DUST GO INTO ELECTRICAL EQUIPMENT. CARBON FIBER DUST IS ELECTRICALLY CONDUCTIVE AND IT CAN CAUSE SHORT CIRCUITS IF IT GOES INTO ELECTRICAL EQUIPMENT. USE A VACUUM NEAR THE SOURCE OF THE DUST TO REMOVE THE DUST FROM THE AIR. IF YOU DO NOT OBEY, YOU CAN CAUSE DAMAGE TO THE ELECTRICAL EQUIPMENT.

BOEING PROPRIETARY - Copyright © - Unpublished Work - See title page for details.

B. This subject contains repairs to components made from epoxy resin reinforced with several layers of graphite tape or fabric, aramid fabric, or a combination of graphite tape or fabric, aramid fabric, or glass fabric (hybrids). The most common construction is a sandwich of two laminated skins separated by a nonmetallic honeycomb core. Solid laminate is used for small components, honeycomb panel edgebands, some primary and secondary structure, and at fitting locations. Glass fabric is also known as fiberglass cloth. This subject describes repairs made using room temperature/150°F (66°C) cure materials (wet layup).

NOTE: The repairs called for in this subject are wet layup repairs. These repairs require rapid use of catalyzed resin materials. Wet layup will not return the structure to its original strength or durability. A periodic inspection plan for the repaired area may be required. For size and limits of such repairs, see applicable component repair subject.

The repairs in this subject are room temperature/150F (66C) repairs, the cure of which may be accelerated by the application of heat as specified herein.

CAUTION: TO GET AN ACCEPTABLE QUALITY REPAIR, DO AS FOLLOWS:

- REFER TO THE APPLICABLE COMPONENT WHICH YOU ARE GOING TO REPAIR FOR THE REPAIR LIMITS AND MATERIAL OF THE COMPONENT BEFORE YOU USE THESE REPAIR INSTRUCTIONS.
- USE THE CORRECT MATERIALS FOR THE TYPE OF COMPONENT AND REPAIR THAT IS MADE.
- USE THE MATERIALS THAT AGREE WITH THE SPECIFICATIONS IN THE SRM
- ACCURATELY FOLLOW THE SRM PROCEDURES AT EACH STEP OF THE REPAIR. IF YOU DO NOT DO THIS, IT CAN CAUSE A REPAIR THAT IS NOT SATISFACTORY AND NOT APPROVED.

ROOM TEMPERATURE/150F (66C) CURE REPAIRS WILL NOT RESTORE EITHER THE STRENGTH OR THE DURABILITY OF THE ORIGINAL 250F (121C) OR 350F (177C) CURE COMPONENTS. FOR SIZE AND LIMITS OF SUCH REPAIRS, SEE APPLICABLE REPAIR SUBJECT.

ROOM TEMPERATURE/150F (66C) REPAIRS MUST NOT BE USED IN STRESS CRITICAL AREAS OF PRIMARY STRUCTURE COMPONENTS. FAILURE TO COMPLY WOULD RESULT IN AN INADEQUATE REPAIR.

C. Specific allowable damage, repair limitations, and repair data, can be found in the chapter/section/subject associated with each structural component.

D. Use suitable holding fixtures for large repairs to prevent distortion of the structure.

BOEING PROPRIETARY - Copyright © - Unpublished Work - See title page for details.

E. Perform the repair procedure specified herein only in areas of reasonable cleanliness. Areas containing oil mist, exhaust fumes, gases, soot, rain, dust, or other particulate matter are specifically prohibited.

F. Protect surfaces from contamination. Do not touch cleaned parts or adhesive with bare hands. Use clean white gloves when handling parts.

G. Store resin and/or adhesive material at 40°F (5°C) or 80°F (27°C) in sealed containers. An identification label must accompany the material inside the bag, with the following information: BMS Type, Class, grade, supplier name, batch number, and date of preparation.

H. Refer to SRM 51-20-00 for source of repair materials and equipment.

I. Refer to SRM 51-10-07 for hole drilling and machining of composite structure.

J. Refer to SRM 51-70 for aerodynamic smoothness requirements.

K. See Fig. 1 for repair index.

L. See Fig. 2 for resin mixes and potting compound data.

2. Repair Procedures Common to Various Repairs

A. Determine Damage

CAUTION: DO NOT USE CHEMICAL PAINT STRIPPERS TO REMOVE PAINT BEFORE MAKING DAMAGE EVALUATIONS. DAMAGE TO THE ADHESIVE RESIN SYSTEM WILL OCCUR.

(1) Examine visually for extent of damage.

(2) Check part in vicinity of damage for entry of water, oil, fuel, dirt or other foreign matter. Water can be detected by radiographic or thermographic methods. Remove contaminants. Refer to par. 2.B. for water removal instructions.

(3) Check for delamination around the damage.

NOTE: *Delamination can be detected by instrumental nondestructive inspection (NDI)* methods or by tap test. For the tap test, use a solid metal disk and tap the repair area lightly, but firmly. Void areas will give a dull sound. Solidly bonded areas will give a sharp ring. Refer to Part 1 of the Nondestructive Test Manual

BOEING PROPRIETARY - Copyright © - Unpublished Work - See title page for details.

B. Remove Water from Damaged Area

(1) Remove water from honeycomb sandwich (Fig. 3).

(a) Remove damaged skin plies to open up honeycomb area in the damaged area. Remove standing water using vacuum or oil-free compressed air.

(b) Sand the core to remove the adhesive. Removal of adhesive fillets on core is not required.

(c) Apply screen over exposed core.

(d) Apply a thermocouple to the center of the screen.

(e) When opposite face is accessible, apply thermocouple to the opposite side of honeycomb sandwich panel.

(f) When opposite face is accessible, apply a heat blanket to opposite side of honeycomb sandwich panel.

NOTE: When opposite face is accessible, it is acceptable to heat the area using a heat blanket only on the opposite face. An additional heat blanket may be used on the near face at the location shown in Fig. 3. The additional heat blanket accelerates water removal. When opposite face is inaccessible, use of heat blanket on the near side is required.

(g) When opposite face is inaccessible or when using an additional heat blanket, perform the following steps:

1) Apply a layer of glass fabric bleeder cloth over the screen and hold in place with masking tape.

2) Apply a thermocouple to the center of the bleeder cloth. Place a vacuum line on the edge of the bleeder cloth and hold in place with masking tape.

3) Place the heat blanket over the bleeder cloth.

(h) Place extruded sealing compound around the entire area and seal the area with vacuum bag material.

(i) Evacuate the layup to a minimum 22 inches of mercury vacuum.

(j) Heat the area for 1 hour minimum at 150°F (66°C) to 170°F (77°C). The rate of temperature rise must not exceed 5°F (3°C) per minute.

(k) Remove layup materials and proceed with repair procedure.

(2) Remove water from solid laminate.

(a) Remove damage and/or delaminated skin. Remove standing water using vacuum or oil-free compressed air.

(b) Heat the area for 1 hour minimum at 150°F (66°C) to 170°F (77°C). The rate of temperature rise must not exceed 5°F (3°C) per minute.

C. Remove and Prepare Damaged Area

(1) Damage removal.

(a) Trim out the damaged lamination to a smooth shape with rounded corners, or a circular or oval shape. Take care not to damage the undamaged plies, core, or surrounding material.

NOTE: Remove only damaged plies, damaged doublers, and damaged fillers.

(b) When the core is also damaged, remove the core by trimming to the same outline as the skin. The core area removed should extend at least 0.50 inch further than the visible core damage limits. Take care to avoid cutting into an undamaged skin on the opposite side. In cores greater than 1.0 inch thick, partially remove core (at least 0.5 inch deep) sufficient to clean up damage.

NOTE: When a potted core repair is to be made, removal of damaged core is not required.

(c) In areas where contamination cannot be removed by cleaning or drying per par. 2.B., remove the contaminated structure along with the other damage.

(d) When opposite inner skin is also damaged, trim out the damage to a smooth shape as described in par. 2.C.(1)(a).

(e) When core is removed from the inner surface of opposite skin, carefully smooth core down to adhesive film.

(f) Inspect cut out area to ensure that all damage has been removed.

CAUTION: SANDING FOR ADHESION OR FINISH REMOVAL MUST NOT EXPOSE OR DAMAGE FILAMENTS IN THE UNTAPERED SURFACE REPAIR AREA.

SANDING MUST NOT EXPOSE OR DAMAGE FILAMENTS IN EACH PLY WHEN STEP SANDING OR IN THE PLY BONDED TO THE CORE (FIG. 4).

LOSS OF STRUCTURAL STRENGTH OF THE COMPONENT WILL OCCUR IF THESE CAUTIONS ARE NOT OBSERVED.

DO NOT USE PAINT STRIPPERS FOR THE REMOVAL OF FINISH. DAMAGE TO THE ADHESIVE RESIN SYSTEM WILL OCCUR.

(2) Preparation of damaged area (Fig. 4).

(a) Determine the number of plies that have been cut. Mask off the area around the cleaned up damage allowing 1.00-inch overlap for each ply replacement, plus 1.00 inch extra for each extra ply to ensure that the existing top ply is completely covered by the repair.

NOTE: Where the number of plies is not apparent, refer to the applicable structure identification or engineering drawing.

WARNING: SANDING GIVES OFF A FINE DUST THAT MAY CAUSE SKIN IRRITATIONS. BREATHING OF AN EXCESSIVE AMOUNT OF THIS DUST MAY BE INJURIOUS. OBSERVE PRECAUTIONS FOR SKIN AND RESPIRATION PROTECTION.

AIR-POWERED EQUIPMENT MUST BE USED WHERE THE POSSIBILITY OF VAPOR IGNITION EXISTS. NONCOMPLIANCE COULD CAUSE PERSONNEL INJURY.

(b) Internal surface of part (nonaerodynamic surface) and noncritical aerodynamic surfaces.

1) Remove the paint finish or tedlar film in the masked off area using No. 240 or finer Scotch-Brite abrasive, or No. 150 or finer sandpaper.

2) Taper sand or step sand each ply around the cleaned up damage using No. 80 sandpaper. Taper or step sand each ply a minimum of 1.0 inch per ply (Fig. 4).

3) An optional procedure for two or three ply laminate face sheets is to fill the cleaned up damage area flush with the original surface using filler plies during the repair layup. The repair plies are then installed directly on the resulting smooth surface of the repair area.

4) Abrade surfaces around repair using No. 240 or finer, Scotch-Brite abrasive.

(c) External surface of part (critical aerodynamic surfaces).

1) Taper sand a uniform taper around the cleaned up damage using No. 80 sandpaper. The taper is to be over a minimum distance of 1.0 inch for each existing ply of the laminate. As an option on sandwich structure, step sanding per par. 2.C.(2)(b)2) may be used instead of taper sanding. Refer to 51-70 for locations of areas of critical aerodynamic smoothness. Taper sanding must always be used on solid laminate structures (Fig. 4).

NOTE: For sanding, use a flexible disk sander, a belt sander, a rotating pad sander, or sand by hand.

2) Remove exterior finishes, including enamel finish and conductive coating, from the surfaces around repair using No. 150 or finer sandpaper.

(d) Edgeband of panel.

1) Taper sand panel edgeband according to par. 2.C.(2)(c).

NOTE: Edgeband is the solid laminate around the outer periphery of the honeycomb panel.

(e) Cleaning of repair area.

1) Remove all sanding dust using oil-free compressed air.

WARNING: KEEP SOLVENTS AWAY FROM SOURCES OF HEAT, FIRE, OR SPARKS. HEAT, FIRE, OR SPARKS CAN CAUSE AN EXPLOSION.

AVOID CONTACT OF SOLVENT WITH SKIN, EYES, AND CLOTHING. WEAR EYE PROTECTION AND USE MECHANICAL VENTILATION OR RESPIRATORY PROTECTION WHEN WORKING IN A CONFINED SPACE OR AREA. BREATHING VAPORS OF ALLOWING SOLVENT TO CONTACT SKIN OR EYES IS HAZARDOUS.

CAUTION: DO NOT IMMERSE PARTS IN TRICHLOROETHANE SOLVENT OR ALLOW STANDING SOLVENT ON PART. DAMAGE TO PART WILL OCCUR.

2) Wipe surfaces with a clean cloth moistened with MIBK (methyl isobutyl ketone), MEK (methyl ethyl ketone) or acetone. Allow solvent to evaporate before proceeding with the repair.

D. Fabricate, Clean and Install Honeycomb Replacement Core Plug

(1) Fabricate core plug.

(a) Fabricate core plug. Refer to specific component structural identification subject to determine type of core called out on engineering drawing.

(b) For butt splicing, the honeycomb core plug should fit flush with original core and with ribbon direction the same as in original core. The replacement core must overlap and make intimate contact with the cell walls of surrounding core material.

(c) Trim core plug to full or partial depth of original core (par. 2.C.(1)(b)).

NOTE: When applicable, depth of core plug should allow for shrinkage during cure and for thickness of extra plies of fabric cloth between core plug and undamaged core or skin.

(2) Clean core plug.

WARNING: KEEP SOLVENTS AWAY FROM SOURCES OF HEAT, FIRE, OR SPARKS, HEAT, FIRE, OR SPARKS CAN CAUSE AN EXPLOSION.

AVOID CONTACT OF SOLVENT WITH SKIN, EYES, AND CLOTHING. WEAR EYE PROTECTION AND USE MECHANICAL VENTILATION OR RESPIRATORY PROTECTION WHEN WORKING IN A CONFINED SPACE OR AREA. BREATHING VAPORS OR ALLOWING SOLVENT TO CONTACT SKIN OR EYES IS HAZARDOUS.

CAUTION: DO NOT EXCEED IMMERSION CRITERIA GIVEN IN PAR. 2.D.(2)(a). DAMAGE TO CORE MATERIAL WILL OCCUR.

DO NOT IMMERSE PARTS IN TRICHLOROETHANE SOLVENT OR ALLOW STANDING SOLVENT ON PART. DAMAGE TO PART WILL OCCUR.

(a) Clean visually contaminated core by dipping (a maximum of four times) in MIBK, MEK or acetone bath for 60 seconds.

(b) Locally contaminated areas can be washed with MIBK, MEK or acetone.

(c) The core must be completely dry, clean and free of evidence of solvents before installation.

(3) Install core plug.

NOTE: The following procedure is based on the core plug installation being cured separately from the repair plies. As an option, core plug installation and repair plies may be cured at the same time.

(a) If one skin is undamaged, apply 2 plies of BMS 9-3, type H-2 or H-3 or 4 plies of BMS 9-3, type D glass fabric saturated with Resin Mix 1 per par. 2.E. in the core cavity. Orientation is optional.

(b) If both skins are damaged, apply a caul plate against the exterior surface of the far side skin and tape in place.

(c) Apply a uniform coat of Resin Mix 3 on the edges of the replacement core plug and the undamaged core that will mate when the plug is installed. Insert the replacement core plug into the core cavity. Orient the ribbon direction to align with the original core ribbon.

(d) Put the layup material and equipment in place per Fig. 5. If damage extends through both skins and access is available, put layup materials and equipment on both sides of the panel using the layup shown in Fig. 5.

NOTE: A heat blanket, infrared heat lamp, or equivalent heat source may be used to accelerate the cure. If a heat lamp is used, see Fig. 8 for heat lamp temperature curve.

(e) Evacuate the repair area to a vacuum of 22 inches of mercury minimum.

NOTE: Maintain a vacuum of 22 inches of mercury minimum during the entire cure cycle.

(f) Check the vacuum bag for leak paths.

(g) Cure per Fig. 2 at the temperature specified in the specific component structural repair subject.

(h) Sand repair core plug approximately flush with surrounding material, making allowance for slight core crush during cure of repair plies.

(i) Remove all sanding dust using oil-free compressed air.

CAUTION: USE OF PRECURED PATCHES IS NOT RECOMMENDED. PRECURED PATCHES BONDED TO THE STRUCTURE UNDER VACUUM PRESSURE ONLY AND LARGE PRECURED PATCHES BONDED TO CONTOURED SURFACES CAN RESULT IN POROUS OR NONCONTINUOUS BONDLINES.

E. Prepare and Apply Repair Plies

NOTE: Aramid fabric, aluminum foil/glass fabric (BMS 8-289, type 120), and aluminum coated glass fabric (BMS 8-278) will be repaired using glass fabric plies. See Fig. 6 for substitution of glass fabric repair plies for original plies of aramid fabric, aluminum foil/glass fabric, or aluminum coated glass fabric.

(1) Prepare repair plies.

(a) Refer to the specific component structure identification to determine the number, orientation, and material of plies used in the original structure.

(b) See Fig. 6 for repair ply material and substitution of repair ply material. No substitutes are permitted for graphite repair plies.

(c) Refer to the specific component structure repair subject for extra repair ply requirements.

(d) See Fig. 7 for extra repair ply material.

(e) See Fig. 4 for overlap requirements.

(f) From each type of material required, cut a piece that is large enough for cutting the required number of plies for the repair patch. In the patch, use one repair ply of fabric for each damaged ply of fabric in the original laminate, use the number of graphite fabric repair plies required per Fig. 6 for each damaged ply of graphite tape in the original laminate, plus extra repair plies as specified in the specific component structural repair subject. If extra repair plies are not specified in the specific component structural repair subject, one extra repair ply is required per Fig. 7. Each repair ply must have the same orientation as the corresponding original ply being replaced. When repairing graphite tape with graphite fabric, see Fig. 6 for repair ply orientation. The orientation of the outermost extra repair ply is to be $\pm 45°$ with respect to the ply orientation convention given in the specific component structural identification. The orientation of the inner extra repair ply (if required) is to be 0 or 90 degrees with respect to the ply orientation convention given in the specific component structural identification. If a filler ply is required, use the same material as adjacent repair ply and orientation is optional.

(2) Impregnate repair plies with resin.

(a) Cut two pieces of parting film approximately 3.0 inches larger all around than the fabric and tape down one piece to a smooth surface.

NOTE: Use teflon film or other parting films.

(b) Lay fabric onto parting film.

(c) Spread Resin Mix 1, prepared as shown in Fig. 2, to adequately cover fabric evenly.

(d) Cover the fabric on the parting film with the second piece of parting film.

(e) Work resin thoroughly and evenly into fabric with squeegee or roller in order to impregnate the fabric and to remove entrapped air.

(f) Work excess resin to edges of fabric such that fabric weave is barely visible.

NOTE: Resin content of the impregnated fabric should be 55 ±5 percent by weight.

(g) Cut the impregnated fabric to the required sizes for each individual ply of the patch. The parting film on both sides of the fabric decreases fraying of the edges while cutting the fabric.

NOTE: The total number of repair plies is to be in accordance with par. 2.E.(1). See Fig. 4 for required overlap of repair plies. Each repair ply must have the same orientation as the original ply. The orientation of the outermost extra repair ply is to be ±45 degrees with respect to the ply orientation convention given in the specific component structural identification. The orientation of the inner extra repair ply (if required) is to be 0 or 90 degrees with respect to the ply orientation convention given in the specific component structural identification. When repairing graphite tape with graphite fabric, see Fig. 6 for repair ply orientation. The orientation of the filler ply is optional.

(3) Apply repair plies.

NOTE: Where the damage has occurred at a lap joint in the original laminates, it is not necessary to make a comparable lap in the repair plies. Where the original core was undamaged and was provided with a recess to match the lap joint, the recess should be filled with filler plies before application of the repair plies.

CAUTION: ENSURE THAT PARTING FILM IS REMOVED FROM REPAIR PLIES PRIOR TO LAYUP AND CURING. NONCOMPLIANCE WILL RESULT IN A RUINED REPAIR.

(a) Apply a coat of Resin Mix 1, prepared as shown in Fig. 2, over the repair area.

(b) Remove parting film from one side of the smallest ply of the patch and place the exposed face against the repair area with the proper orientation.

(c) Use a squeegee over the parting film that covers the patch to remove wrinkles and entrapped air. Do not apply excessive pressure. Excessive pressure will produce a patch deficient in resin.

(d) After removing parting film from the contact faces, place the next larger size ply of the impregnated patch over the ply on the repair area with proper orientation and with overlap all around per Fig. 4.

(e) Place succeeding plies of the patch as described in steps (c) and (d).

F. Layup/Bagging Procedure (Fig. 5)

(1) Secure three thermocouples (spaced evenly around repair) to the panel at the edge of the repair and secure them to the appropriate recorders.

(2) Place a layer of perforated FEP parting film (1 mil thick) over the repair. Cut the FEP so that the edges extend 3 inches beyond the edge of the repair patch.

(3) Place a layer of dry peel ply or Style 120 glass fabric (or equivalent thickness glass fabric) over the perforated FEP as a surface bleeder. Cut the surface bleeder so that the edges extend 2 inches beyond the edge of the perforated FEP.

(4) Place a layer of solid FEP parting film (2 mil thick) over the surface bleeder. Cut the solid FEP so that the edges are even with the edge of the perforated FEP.

(5) Place a layer of Airweave SS or Style 120 glass fabric over the solid FEP as a surface breather. Cut the surface breather so that the edges extend to the edge of the surface bleeder. Make certain the surface breather makes contact with the surface bleeder along the edges.

(6) Secure a vacuum line on the edge of the surface breather.

WARNING: FOR ACCELERATED CURE, USE HEAT CURING EQUIPMENT THAT IS ACCEPTABLE TO LOCAL FIRE PROTECTION AUTHORITIES. FAILURE TO COMPLY COULD CAUSE PERSONNEL INJURY.

(7) If a heat blanket is used as a heat source, perform the following steps:

NOTE: A heat blanket, infrared heat lamp, or equivalent heat source may be used to accelerate the cure.

If the repair is made on a structure too small to allow the heat blanket to be vacuum bagged, proceed to step (8) and place heat blanket over the vacuum bag.

(a) Place a heat blanket over the surface breather. The heat blanket must extend a minimum of 2 inches beyond the repair patch edges.

NOTE: When using a heat blanket larger than 12 inches on one side, an aluminum caul plate (0.016 inch thick) can be used under the heat blanket to minimize localized heating. Make the caul plate slightly smaller than the surface breather.

(b) Place controlling thermocouple over the center of the heat blanket.

(c) Place 4 to 6 layers of glass fabric over the heat blanket. The glass fabric will insulate the heat blanket and prevent damage to the bagging film.

(8) Apply extruded sealing compound around the entire repair area, approximately 6 inches outside the edge of the heat blanket.

(9) Lay a piece of vacuum bag material over the entire repair area, sealing the edge with the extruded sealing compound. Pleat the vacuum bag where needed to prevent bridging of bag material and subsequent bag breakage. Pad all sharp objects and corners to prevent bag breakage. It is optional to vacuum bag the entire part.

NOTE: The entire part must be vacuum bagged and restrained in place to prevent delamination and distortion when the repair area exceeds 15% of panel area. Regardless of the method of heat application, restraining devices that maintain the contour and support the part must be used for large parts where sagging and distortion could occur due to the weight of the part.

(10) Evacuate the space under the vacuum bag and maintain a vacuum of 22 inches of mercury minimum.

NOTE: Maintain a vacuum of 22 inches of mercury during entire cure cycle.

(11) Check the vacuum bag for leak paths.

WARNING: FOR ACCELERATED CURE, USE HEAT CURING EQUIPMENT THAT IS ACCEPTABLE TO LOCAL FIRE PROTECTION AUTHORITIES. NONCOMPLIANCE COULD CAUSE PERSONNEL INJURY.

CAUTION: SURFACE TEMPERATURE MUST NOT EXCEED 170°F (77°C). DAMAGE OR DISTORTION OF STRUCTURE MAY OCCUR IF TEMPERATURE EXCEEDS 170°F (77°C).

G. Cure the Repair

NOTE: The gel and cure times of the potting and laminating resins are based on ambient temperature (70 to 80F; 21 to 27°C); elevated temperatures will advance the reactions and lower temperatures will retard the reactions.

(1) Cure the repair per Fig. 2 and the specific component repair chart. A heat blanket, infrared heat lamp, or equivalent heat source may be used to accelerate the cure. If a heat lamp is used as a heat source, see Fig. 8 for heat lamp temperature curve. Heat at a maximum of 7°F (4°C) per minute. Determination of the temperature must be made using the thermocouples placed at the edge of the patch.

NOTE: Cure time does not include the time required for the mold and part to heat up to temperature. Cure time is the period after the part has reached that temperature.

(2) Maintain vacuum of 22 inches of mercury minimum during entire cure cycle.

(3) Remove bagging and parting film after curing.

(4) Inspect the patch to ensure that it is free from pits, blisters, starved areas, and excess resin deposits.

H. Refinish after Repair

CAUTION: DO NOT SAND INTO ORIGINAL STRUCTURE. FAILURE TO COMPLY WILL REDUCE THE STRENGTH OF THE COMPONENT.

(1) Lightly sand edge of topmost repair ply as necessary to fair the edge. Sand surface of repair to produce a smooth finish without damaging fibers.

(2) Apply finish to the repaired surface using the following applicable methods.

(a) Where clear Tedlar film surfaces have been removed, seal with a brush coat of Resin Mix 1 or 6 (Fig. 2). Cure per Fig. 2.

(b) Where grey or white Tedlar film surfaces have been removed, seal with Resin Mix 1 or 6 (Fig. 2). Cure per Fig. 2 and apply one coat of BMS 10-11 primer and one coat of BMS 10-60 enamel (grey, BAC705; white, BAC7106).

(c) Where conductive surfaces have been removed, apply conductive finish according to Chapter 51 of the Maintenance Manual.

(d) Where the abrasion resistant teflon finish has been removed from the internal surface of the panel edgeband, reapply the finish according to Chapter 51 of the Maintenance Manual.

(e) Where the original painted surfaces have been removed, restore original finish according to Chapter 51 of the Maintenance Manual.

(f) Where aluminum foil (BMS 8-289) has been removed, aluminum flame spray per 51-40-9.

(g) Where sealant has been removed from around fittings or fay surfaces to facilitate repairs, reapply BMS 5-26 in fuel tank areas or BMS 5-95 in all other areas per drawing requirements or 51-10-2.

(h) Where aluminum flame sprayed areas have been damaged, repair per 51-40-9.

(i) Where aluminum coated glass fabric (BMS 8-278) has been repaired, aluminum flame spray per 51-40-9.

(j) Where repairs have been made to the exterior surfaces of panels containing aramid, apply sealant to the exterior surfaces per 51-20-4.

I. Perform Post Repair Requirements

(1) Make an inspection of the repair that was done to make sure that the repair is satisfactory. The inspection must include these areas:
- The area that was hot.
- A minimum width of 2 inches all around the area that was hot.

If a defective repair is indicated by the inspection, remove the defective repair and install the repair again.

NOTE: Post repair inspection is recommended. Examples of inspection procedures are given in NDT Manual Part 1, 51-01-01. Other inspection methods that have been examined and found satisfactory by the airline can be used.

WARNING: FLIGHT SAFETY DEMANDS THAT CERTAIN CONTROL SURFACES BE PROPERLY BALANCED AT ALL TIMES.

(2) Following repair of control surface, balance must be checked to determine whether or not rebalancing is required. Rebalance as necessary per 51-80-00.

CAUTION: REPAIRS MADE TO CONTROL SURFACES AND/OR ADJACENT STRUCTURE MUST NOT INTERFERE WITH THE DESIGNED OPERATION OF THE CONTROL SURFACES. DAMAGE TO AIRPLANE STRUCTURE MAY OCCUR.

(3) Check all repairs for noninterference with operation of control surfaces. Ensure adequate clearances for all repaired parts.

CAUTION: REPAIRS MUST NOT COVER EXISTING DRAIN HOLES IN PANELS. WATER WILL ACCUMULATE IF DRAIN HOLES ARE COVERED.

(4) If the repair covers a drain hole, drill through the repair at existing location.

NOTE: Drain holes are usually 0.375-inch diameter (Ref Chapter 51, Maintenance Manual).

CAUTION: TO GET AN ACCEPTABLE QUALITY REPAIR, DO AS FOLLOWS:

- REFER TO THE APPLICABLE COMPONENT WHICH YOU ARE GOING TO REPAIR FOR THE REPAIR LIMITS AND MATERIAL OF THE COMPONENT BEFORE YOU USE THESE REPAIR INSTRUCTIONS.
- USE THE CORRECT MATERIALS FOR THE TYPE OF COMPONENT AND REPAIR THAT IS MADE.
- USE THE MATERIALS THAT AGREE WITH THE SPECIFICATIONS IN THE SRM.
- ACCURATELY FOLLOW THE SRM PROCEDURES AT EACH STEP OF THE REPAIR. IF YOU DO NOT DO THIS, IT CAN CAUSE A REPAIR THAT IS NOT SATISFACTORY AND NOT APPROVED.

3. Typical Repairs

NOTE: These repairs apply to all graphite, aramid, and graphite/aramid/glass hybrid reinforced laminates and nonmetallic honeycomb sandwich components except radomes and floor panels.

See Fig. 1 for repair index.

A. Repair 1 - Repair of Damage to One Skin of Honeycomb Panel (Fig. 9)

(1) Determine damage per par. 2.A. Ensure that water and other contaminations are removed per par. 2.B.

(2) Cut away damaged plies per par. 2.C.(1). Do not remove any core.

(3) Prepare damaged area per par. 2.C.(2).

(4) Prepare and apply fabric repair plies per par. 2.E.

(5) Apply vacuum and cure per par. 2.F. and 2.G.

(6) Refinish the repair area per par. 2.H.

B97384

(7) Perform applicable post-repair requirements per par. 2.I. before returning the repaired component to flight service.

B. Repair 2 - Repair of Damage, 0.50-Inch Diameter or Less, to One Skin and Honeycomb Core (Fig. 10)

(1) Remove clear or colored Tedlar film surface, as applicable, from repair area per par. 2.C.(2).

(2) Remove exterior finishes as applicable, including enamel finish and conductive coating, from the repair surface around the damaged area using No. 150 or finer sandpaper.

(3) Dry out structure around damaged area per par. 2.B.

(4) Remove loose fragments and other contamination from the damaged area. Clean up damaged area to a smooth and rounded shape per par. 2.C.

(5) Clean repair area per par. 2.C.(2)(e).

(6) Prepare Resin Mix 4 or Resin Mix 5 according to Fig. 2.

(7) Work resin into the hole filling as much as possible.

(8) Cure according to par. 2.G.

(9) Carefully sand any projecting material to fair with surrounding surface within ±0.010 inch.

NOTE: A 0.010-inch thick aluminum template may be used to protect surrounding surface while sanding.

(10) Abrade surface around repair using No. 240, or finer, Scotch-Brite abrasive.

(11) Clean repair area per par. 2.C.(2)(e).

(12) Prepare and apply two cover plies according to par. 2.E. and Fig. 10.

(13) Bag repair and cure according to par. 2.F. and 2.G.

(14) Refinish the repair according to par. 2.H.

(15) Perform applicable post-repair requirements per par. 2.I. before returning the repaired component to flight service.

C. Repair 3 - Repair of Damage, Greater than 0.50-Inch Diameter, to One Skin and Honeycomb Core (Fig. 11)

(1) Determine extent of damage according to par. 2.A.

(2) Remove all contamination and water from damaged area per par. 2.B. Area must be completely dried out.

(3) Remove damage and prepare area according to par. 2.C.

(4) Fabricate, clean, and install honeycomb replacement core plug per par. 2.D.

(5) Clean surface according to par. 2.C.(2)(e).

(6) Prepare and apply repair plies according to par. 2.E.

(7) Bag repair and cure according to par. 2.F. and 2.G.

(8) Refinish the repair according to par. 2.H.

(9) Perform applicable post-repair requirements per par. 2.I. before returning the repaired component to flight service.

D. Repair 4 - Repair of Damage to Both Skins and Honeycomb Core (Fig. 12)

(1) Determine extent of damage according to par. 2.A.

(2) Remove all contamination and water from damaged area per par. 2.B. Area must be completely dried out.

(3) Remove damage and prepare area according to par. 2.C.

(4) Fabricate, clean, and install honeycomb replacement core plug per par. 2.D., except it is not necessary to vacuum bag the core plug installation at this time.

(5) Prepare and apply repair plies to one surface of the panel according to par. 2.E. A caul plate may be used on the opposite face of the panel to restrain the core plug in place.

(6) Bag repair and cure according to par. 2.F. and 2.G. Ensure that temperature is approximately equal on both sides of panel.

(7) Sand core plug approximately flush with surrounding material, making allowance for slight core crush during cure.

(8) Clean surface according to par. 2.C.(2)(e).

(9) Prepare and apply repair plies to the other surface of the panel according to par. 2.E.

(10) Bag repair and cure according to par. 2.F. and 2.G.

(11) Refinish the repair according to par. 2.H.

(12) Perform applicable post-repair requirements per par. 2.I. before returning the repaired component to flight service.

NOTE: The above two-stage cure procedure is recommended. As an option, a three-stage cure procedure may be used wherein the core plug installation and the repair plies on each side may be cured separately.

E. Repair 5 - Repair of Damage to Honeycomb Panel Where Access is Limited to One Side (Fig. 13)

NOTE: This repair applies to flat panels (or nearly flat panels) where damage extends completely through a panel, but access is not readily available to repair the unexposed side.

Maximum diameter of cleaned up damage is 1.00 inch.

(1) Determine extent of damage according to par. 2.A.

(2) Remove all contamination and water from damaged area per par. 2.B. Area must be completely dried out.

(3) Remove damage and prepare area according to par. 2.C. and the following:

(a) Enlarge the hole in the outer skin and core (D diameter) to permit a repair to be made to the inner skin with the required overlap.

NOTE: D diameter = (d + 2N) inches
d = diameter of cleaned up damage (1.00 inch maximum)
N = number of plies in the inner skin.

Stepping of the plies in the inner skin is not allowed for this repair.

(4) Make a suitable mold on which to lay up the inner skin patch. A thin gage aluminum sheet or any smooth surface can be used as a mold.

(5) Cover the mold with parting film or a release agent.

(6) Lay up the required number of fabric repair plies for the inner skin patch on the mold, using the procedures of par. 2.E., except that all repair plies will have the same diameter. Make diameter of repair plies at least equal to D diameter (Ref par. 3.E.(3)(a)).

(7) Bag and cure the inner skin patch according to par. 2.F. and 2.G. Place thermocouples at edge of the patch before cure if accelerated cure is used.

(8) Remove the patch from the mold and trim to D diameter (par. 3.E.(3)(a)).

(9) Fabricate and clean core plug according to par. 2.D.(1) and 2.D.(2).

(10) Apply Resin Mix 1 (Fig. 2) to the surface of the inner skin which fays with the inner skin patch and install patch in place. Then apply Resin Mix 1 on the other (exposed) side of the patch.

(11) Complete the installation of the core plug per par. 2.D.(3).

(12) Clean surfaces according to par. 2.C.(2)(e).

(13) Prepare and apply repair plies to the outer skin surface of the panel according to par. 2.E.

(14) Bag repair and cure according to par. 2.F. and 2.G.

(15) Refinish the panel outer surface according to par. 2.H.

(16) Perform applicable post-repair requirements per par. 2.I. before returning the repaired component to flight service.

F. Repair 6 - Repair of Delamination Between Plies of Panel Edgeband (Fig. 14)

(1) Determine damage per par. 2.A.

(2) Remove all contaminants and water from damaged area. Area must be completely dried out.

(3) Force Resin Mix 1 (Fig. 2), BMS 5-25, or BMS 5-92, Type 1, Grade 1 into delaminated area.

(4) Clamp plies together and remove excess resin.

(5) Cure according to par. 2.G., maintaining pressure until cured. Vacuum pressure is not required for this repair.

(6) Refinish surface as required.

(7) Perform applicable post-repair requirements per par. 2.I. before returning the repaired component to flight service.

G. Repair 7 - Repair of Damage to Plies on Edge of Honeycomb Panel (Fig. 15)

(1) Determine extent of damage according to par. 2.A.

(2) Remove all contamination and water from damaged area per par. 2.B. Area must be completely dried out.

CAUTION: DO NOT SAND INTO BOND PLY OR CORE (FIG. 15). LOSS OF STRUCTURAL STRENGTH OF THE COMPONENT WILL OCCUR IF THIS CAUTION IS NOT OBSERVED. BOND PLY IS PLY ADJACENT TO CORE.

(3) Remove damage and prepare area according to par. 2.C.

CAUTION: ON HYBRID PANELS, ENSURE THAT GRAPHITE REPAIR PLIES DO NOT EXTEND INTO AREAS OF FASTENER HOLES. ELECTROLYSIS BETWEEN THE METAL FASTENERS, SUPPORT STRUCTURE, AND GRAPHITE MAY CAUSE CORROSION IN THE ALUMINUM STRUCTURE.

(4) Prepare and apply repair plies according to par. 2.E.

(5) Bag repair and cure according to par. 2.F. and 2.G.

(6) Refinish the repair according to par. 2.H.

(7) Perform applicable post-repair requirements per par. 2.I. before returning the repaired component to flight service.

H. Repair 8 - Repair of Damage to Honeycomb Core on Edge of Honeycomb Panel (Fig. 16)

(1) Determine extent of damage according to par. 2.A.

(2) Remove all contamination and water from damaged area per par. 2.B. Area must be completely dried out.

(3) Remove damage and prepare area according to par. 2.C.

(4) Fabricate, clean, and install honeycomb replacement core plug per par. 2.D.

(5) Clean surfaces according to par. 2.C.(2)(e).

CAUTION: ON HYBRID PANELS, ENSURE THAT GRAPHITE REPAIR PLIES DO NOT EXTEND INTO AREAS OF FASTENER HOLES. ELECTROLYSIS BETWEEN METAL FASTENERS, SUPPORT STRUCTURE, AND GRAPHITE MAY OCCUR CAUSING CORROSION TO ALUMINUM STRUCTURE.

(6) Prepare and apply repair plies according to par. 2.E.

(7) Bag repair and cure according to par. 2.F. and 2.G.

(8) Refinish the repair according to par. 2.H.

(9) Perform applicable post-repair requirements per par. 2.I. before returning the repaired component to flight service.

I. Repair 9 - Repair of Damaged Panel Attach Hole in Honeycomb Panel Edgebands or Along Edges of Solid Laminate Panels (Fig. 17)

(1) Determine the extent of damage according to par. 2.A.

(2) Remove all contamination and water from damaged area per par. 2.B. Area must be completely dried out. Any structure in the repair area that cannot be dried out must be removed along with the other damage.

(3) Taper sand around the hole to remove damage according to Fig. 17.

(4) Clean area according to par. 2.C.(2)(e).

CAUTION: ON HYBRID PANELS, ENSURE THAT GRAPHITE REPAIR PLIES DO NOT EXTEND INTO AREAS OF FASTENER HOLES. ELECTROLYSIS BETWEEN METAL FASTENERS, SUPPORT STRUCTURE, AND GRAPHITE MAY OCCUR CAUSING CORROSION TO ALUMINUM STRUCTURE.

(5) Prepare and apply repair plies according to par. 2.E. and Fig. 17.

(6) Bag repair and cure according to par. 2.F. and 2.G.

(7) Refinish the repair according to par. 2.H.

(8) Drill and countersink fastener holes. Refer to 51-20-07 for hole drilling and machining of composite structure.

(9) Perform applicable post-repair requirements per par. 2.I. before returning the repaired component to flight service.

J. Repair 10 - Repair of Damage, 0.50-Inch Diameter or Less, to Solid Laminates (Fig. 18)

NOTE: This repair applies to components made from laminated graphite, aramid, or graphite/aramid/glass fabric hybrid plies and epoxy resin without a honeycomb core.

(1) Determine extent of damage according to par. 2.A. If delamination is found, repair per par. 3.K. If no delamination is found, continue with this repair.

(2) Clean up damage per Fig. 18.

(3) Clean repair area per par. 2.C.(2)(e).

(4) Fill hole flush or slightly higher than surrounding surface with Resin Mix 4 or Resin Mix 5.

(5) Cure repair according to par. 2.G., except it is not necessary to maintain a vacuum.

CAUTION: DO NOT SAND INTO FIBERS IN THE AREA SURROUNDING THE DAMAGE.

(6) Sand any projecting material to fair with surrounding surface within ±0.010 inch.

NOTE: A 0.010-inch thick aluminum template may be used to protect surrounding surface while sanding.

(7) Abrade surface around repair using No. 240, or finer, Scotch-Brite abrasive.

(8) Clean repair area per par. 2.C.(2)(e).

(9) Prepare and apply repair plies, as shown in Fig. 18, according to par. 2.E.

(10) Bag repair and cure according to par. 2.F. and 2.G.

(11) Refinish the repair according to par. 2.H.

(12) Perform applicable post-repair requirements per par. 2.I. before returning the repaired component to flight service.

K. Repair 11 - Repair of Damage, Greater than 0.50-Inch Diameter, to Solid Laminates (Fig. 19)

NOTE: This repair applies to components made from laminated graphite, aramid, or graphite/aramid/glass fabric hybrid plies and epoxy resin without a honeycomb core.

(1) Determine extent of damage according to par. 2.A.

(2) Remove all contamination and water from damaged area per par. 2.B. Area must be completely dried out.

(3) Remove damage and prepare area according to par. 2.C.

(4) Clean surface according to par. 2.C.(2)(e).

(5) Prepare and apply repair plies according to par. 2.E.

(6) Bag repair and cure according to par. 2.F. and 2.G.

(7) Refinish the repair according to par. 2.H.

(8) Perform applicable post-repair requirements per par. 2.I. before returning the repaired component to flight service.

L. Repair 12 - Repair of Dents (Fig. 20)

(1) Determine extent of damage according to par. 2.A. If fiber damage or delamination is found, refer to specific component structural repair subject.

(2) Mask off damaged area allowing 1.0 inch of overlap for the repair ply.

(3) Remove Tedlar or decorative finish per par. 2.C.(2)(b) and (c).

(4) Clean damaged area according to par. 2.C.(2)(e).

(5) Pot dent flush or slightly higher than surrounding surface with Resin Mix 2.

(6) Cure per par. 2.G.

CAUTION: DO NOT SAND INTO FIBERS IN THE AREA SURROUNDING DETENT.

(7) Sand flush using 150 grit or finer sandpaper.

(8) Clean area according to par. 2.C.(2)(e).

(9) Prepare and apply repair ply according to Fig. 20 and par. 2.E. The repair ply must overlap the potted area 1.0 inch.

(10) Bag repair and cure according to par. 2.F. and 2.G.

(11) Refinish the repair according to par. 2.H.

(12) Perform applicable post-repair requirements per par. 2.I. before returning the repaired component to flight service.

CAUTION: THE FOLLOWING REPAIR IS LIMITED TO LIGHTNING DAMAGE NOT PENETRATING FIBERS. IF FIBERS OR CORE HAVE BEEN DAMAGED, REFER TO SPECIFIC COMPONENT STRUCTURAL REPAIR SUBJECT.

M. Repair 13 - Repair of Lightning Strike Damage at Trailing Edge (Fig. 21)

(1) Determine extent of damage according to par. 2.A. If delamination is found, refer to specific component structural repair subject.

(2) Mask off damaged area allowing 1.0 inch of overlap for the repair ply.

(3) Remove Tedlar or decorative finish per par. 2.C.(2)(b) and (c).

(4) Clean damaged area according to par. 2.C.(2)(e).

(5) Seal surface with Resin Mix 6, prepared according to Fig. 2. Excess resin must be scraped off before it gels.

(6) Cure per par. 2.G.

(7) Prepare and apply one ply of BMS 9-3, type H-2 or H-3 glass fabric according to par. 2.E. The repair ply must overlap the lightning damage by 1.0 inch all around.

(8) Bag repair and cure according to par. 2.F. and 2.G.

(9) Refinish the repair according to par. 2.H.

(10) Perform applicable post-repair requirements per par. 2.I. before returning the repaired component to flight service.

CAUTION: THE FOLLOWING REPAIR HAS INSPECTION REQUIREMENTS AND TIME LIMITS. SEE SPECIFIC COMPONENT STRUCTURAL REPAIR SUBJECT FOR REPAIR LIMITATIONS. FAILURE TO COMPLY COULD RESULT IN AN UNACCEPTABLE AND UNAUTHORIZED REPAIR.

N. Repair 14 - Repair of Small Damage to One Skin (Fig. 22)

(1) Determine extent of damage according to par. 2.A.

(2) Mask off damaged area allowing for overlap of repair plies.

(3) Remove Tedlar or decorative finish in the masked off area using No. 240 or finer Scotch-Brite abrasive, or No. 150 or finer sandpaper.

(4) Remove any moisture and contamination using vacuum or oil-free compressed air.

(5) Heat the area for 1 hour minimum at 150°F (66°C) to 170°F (77°C). The rate of temperature rise must not exceed 7°F (4°C) per minute.

(6) Lightly abrade masked off area with 150 grit or finer sandpaper.

(7) Clean damaged area according to par. 2.C.(2)(e).

(8) Prepare and apply repair plies according to par. 2.E. and the following:

(a) For graphite panels, use one ply of graphite fabric for each damaged ply of graphite fabric and use the number of graphite fabric plies required per Fig. 6 for each damaged graphite tape ply.

(b) For aramid panels, use one ply of glass fabric for each damaged ply.

(c) For graphite/aramid/glass fabric hybrid panels, use one ply of glass fabric for each damaged ply of aramid or glass fabric and use two plies of BMS 9-3, type H-2 or H-3 glass fabric for each damaged ply of graphite fabric or tape.

(d) The orientation of the outermost repair ply is to be the same as the outermost ply in the original laminate. Other repair plies are to be oriented in the same sequential order as in the original laminate.

(9) Bag repair and cure according to par. 2.F. and 2.G.

(10) Refinish the repair according to par. 2.H.

(11) Perform applicable post-repair requirements per par. 2.I. before returning the repaired component to flight service.

REPAIR NO.	REPAIR TITLE	PARAGRAPH	FIGURE NO.
1	REPAIR OF DAMAGE TO ONE SKIN OF HONEYCOMB PANEL	3.A.	9
2	REPAIR OF DAMAGE, 0.50-INCH DIAMETER OR LESS, TO ONE SKIN AND HONEYCOMB CORE	3.B.	10
3	REPAIR OF DAMAGE, GREATER THAN 0.50-INCH DIAMETER, TO ONE SKIN AND HONEYCOMB CORE	3.C.	11
4	REPAIR OF DAMAGE TO BOTH SKINS AND HONEYCOMB CORE	3.D.	12
5	REPAIR OF DAMAGE TO HONEYCOMB PANEL WHERE ACCESS IS LIMITED TO ONE SIDE	3.E.	13
6	REPAIR OF DELAMINATION BETWEEN PLIES OF PANEL EDGEBAND	3.F.	14
7	REPAIR OF DAMAGE TO PLIES ON EDGE OF HONEYCOMB PANEL	3.G.	15
8	REPAIR OF DAMAGE TO HONEYCOMB CORE ON EDGE OF HONEYCOMB PANEL	3.H.	16
9	REPAIR OF DAMAGED PANEL ATTACH HOLE IN HONEYCOMB PANEL EDGEBANDS OR ALONG EDGES OF SOLID LAMINATE PANELS	3.I.	17
10	REPAIR OF DAMAGE, 0.50-INCH DIAMETER OR LESS, TO SOLID LAMINATES	3.J.	18
11	REPAIR OF DAMAGE, GREATER THAN 0.50-INCH DIAMETER, TO SOLID LAMINATES	3.K.	19
12	REPAIR OF DENTS	3.L.	20
13	REPAIR OF LIGHTNING STRIKE DAMAGE AT TRAILING EDGE	3.M.	21
14	REPAIR OF SMALL DAMAGE TO ONE SKIN	3.N.	22

Repair Index
Figure 1

135335

RESIN TYPE	COMPONENTS	PARTS BY WEIGHT	OPEN TIME BEFORE USE, OR POT LIFE OF MIXTURE	CURING TIME [A]
RESIN MIX 1 (LAMINATING RESIN)	FR-7020 RESIN BASE HARDENER EY 3804 RESIN BASE HARDENER	 100 ±2 58 ±0.5	APPROX 30 MINUTES AT 75°F	30 MINUTES AT 150°F (66°C) 6 HOURS MIN AT ROOM TEMPERATURE (65°F MIN, 19°C MIN) [B]
RESIN MIX 2 (POTTING RESIN) (BMS 5-28 TYPE 7)	CG-1305 RESIN CG-1305 HARDENER	100 ±5 22 ±1	60 MINUTES AT 70°F (21°C)	12 HRS AT 75°F (24°C) 2 HRS AT 125°F (52°C)
	FR 7162 RESIN FR 7162 HARDENER	100 ±5 40 ±2		
RESIN MIX 3 (POTTING RESIN)	RESIN MIX 2 MICROBALLOONS	100 5	SAME AS RESIN MIX 2	SAME AS RESIN MIX 2
RESIN MIX 4	RESIN MIX 1 MILLED GLASS FIBER, 1/32-IN	80 20	SAME AS RESIN MIX 1	SAME AS RESIN MIX 1
RESIN MIX 5	RESIN MIX 2 MILLED GLASS FIBER, 1/32-IN	80 20	SAME AS RESIN MIX 2	SAME AS RESIN MIX 2
RESIN MIX 6 (SEALER RESIN) (BMS 8-207, TYPE 1, CLASS I)	EC1838A RESIN EC1838B HARDENER	50 50	20 MINUTES AT 75° TO 79°F (24° TO 26°C)	2 HRS AT 105° (41°C) TO 125°F (52°C)
RESIN MIX 6 (SEALER RESIN) ALTERNATE (BMS 8-207 TYPE 1, CLASS II)	FR-40 RESIN FR-5413C HARDENER	99 TO 101 14.5 TO 15.5	20 MINUTES AT 75° TO 79°F (24° TO 26°C)	12 HRS MIN AT ROOM TEMP (65°F MIN) (19°C MIN) 1 HR MIN AT 150°F (66°C) TO 170°F (77°C)
RESIN MIX 6 (SEALER RESIN) ALTERNATE	EPIBOND 156A RESIN EPIBOND 941 HARDENER	98 TO 102 9.5 TO 10.5	45 TO 60 MINUTES AT 70°F (21°C)	SEE FIG. 8
RESIN MIX 6 (SEALER RESIN) ALTERNATE	EPIBOND 156A RESIN EPIBOND 156B HARDENER	98 TO 102 5.7 TO 6.3	15 TO 25 MINUTES AT 77°F (25°C)	12 HRS AT 70°F (21°C) OR 1 TO 3 HRS AT 150°F (66°C)
RESIN MIX 6 (SEALER RESIN) ALTERNATE	FR-5318S RESIN FR-5318C HARDENER	98 TO 102 49 TO 51	45 TO 60 MINUTES AT 70°F (21°C)	SEE FIG. 8
RESIN MIX 6 EPOX-O WELD (SEALER RESIN) ALTERNATE	TWO COMPONENT KIT	FOLLOW MANUFACTURERS INSTRUCTIONS FURNISHED WITH EACH KIT		
			45 TO 60 MINUTES AT 70°F (21°C)	SEE FIG. 8

Resin Specifications and Mixing Procedures
Figure 2 (Sheet 1)

WARNING: THESE CHEMICALS CONTAIN TOXIC INGREDIENTS. PROVIDE ADEQUATE VENTILATION AND PROTECT THE SKIN AND EYES FROM CONTACT WITH UNCURED RESINS OR CURING AGENT. WEAR NEOPRENE GLOVES OVER COTTON GLOVES FOR PROTECTION OF HANDS. IF SKIN IS EXPOSED TO DIRECT CONTACT WITH UNCURED RESINS OR CURING AGENT, WASH WITH WARM WATER OR SOAP. AVOID THE USE OF SOLVENTS FOR CLEANING THE SKIN.

CAUTION: TO PREVENT CONTAMINATION OF THE RESIN, DO NOT USE WAXED CONTAINERS FOR MIXING.

	MIXING PROCEDURE
RESIN MIX 1 RESIN MIX 2 RESIN MIX 6	ADD HARDENER TO RESIN AND MIX THOROUGHLY.
RESIN MIX 3	1. ADD PHENOLIC MICROBALLOONS TO RESIN AND MIX THOROUGHLY. 2. ADD HARDENER AND MIX THOROUGHLY.
RESIN MIX 4 RESIN MIX 5	ADD MILLED GLASS FIBERS TO RESIN MIX TO PROVIDE A CONSISTENCY SIMILAR TO A THIN PUTTY.

NOTES

- MATERIALS MUST GEL AT ROOM TEMPERATURE PRIOR TO HEATING. RATE OF HEAT RISE MUST BE NO GREATER THAN 7°F (4°C) PER MINUTE
- REFER TO 51-20-00 FOR SOURCES OF MATERIALS

[A] CURE TIME IS THE MINIMUM TIME REQUIRED TO CURE PRIOR TO HANDLING OR SANDING

[B] MINIMUM TIME TO CURE FOR OPTIMUM PROPERTIES IS 3 HOURS AT 150°F (66°C) OR 5 DAYS AT ROOM TEMPERATURE (65°F MIN, 19°C MIN)

Resin Specifications and Mixing Procedures
Figure 2 (Sheet 2)

135338

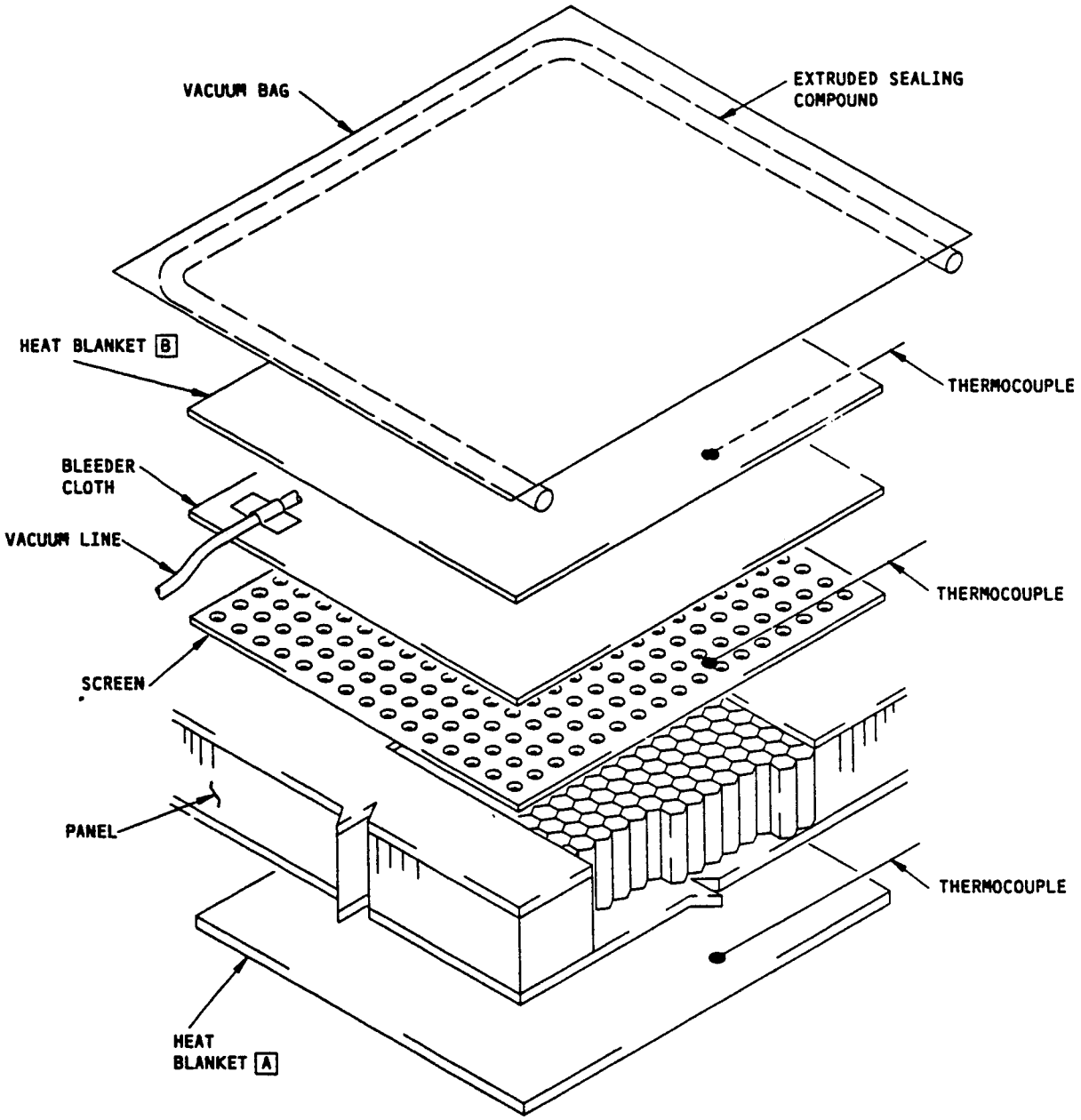

NOTES

A PREFERRED LOCATION OF HEAT BLANKET WHEN OPPOSITE FACE IS ACCESSIBLE

B ALTERNATE LOCATION OF HEAT BLANKET WHEN OPPOSITE SIDE IS INACCESSIBLE. THIS LOCATION MAY BE USED FOR AN ADDITIONAL HEAT BLANKET TO ACCELERATE WATER REMOVAL

Water Removal From Honeycomb Sandwich
Figure 3

135358

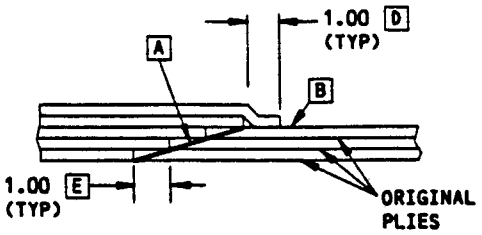

TAPER SANDED SKIN
DETAIL I

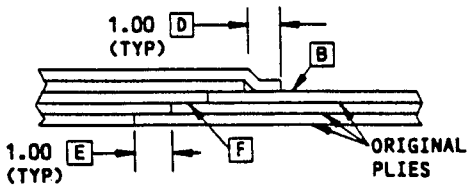

STEP SANDED SKIN
DETAIL II

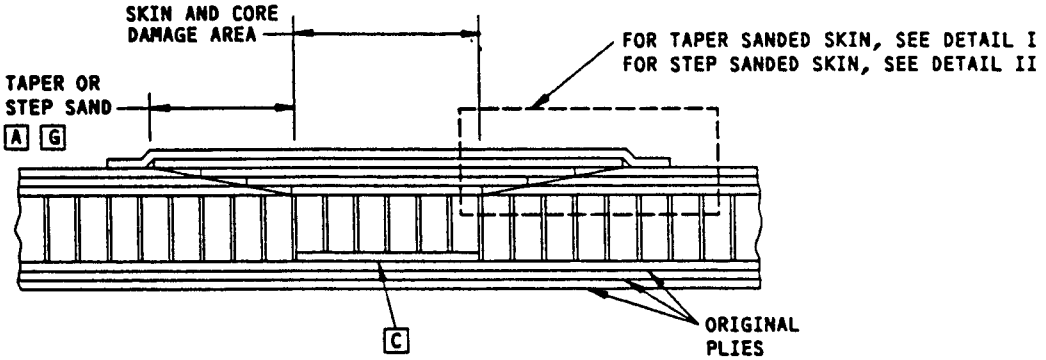

SECTION THRU TYPICAL REPAIR

NOTES

A TAPER SAND OR STEP SAND EXISTING PLIES AROUND REPAIR AREA A MINIMUM OF 1.00 INCH FOR EACH EXISTING PLY

B DO NOT EXPOSE OR DAMAGE FILAMENTS IN UNTAPERED AREA WHEN SANDING

C SANDING MUST NOT EXPOSE OR DAMAGE THE FILAMENTS IN BOND PLY (PLY BONDED TO CORE)

D FIRST EXTRA REPAIR PLY MUST OVERLAP AT LEAST 1.00 INCH PAST EDGE OF LAST REPAIR PLY. EACH SUCCEEDING EXTRA REPAIR PLY MUST OVERLAP AT LEAST 1.00 INCH PAST EDGE OF PRECEDING EXTRA REPAIR PLY

E EACH REPAIR PLY MUST OVERLAP AT LEAST 1.00 INCH PAST EDGE OF PRECEDING REPAIR PLY

F REMOVE DAMAGED PLIES IN STEPS

G TAPER SAND SURFACES IN AREAS OF CRITICAL AERODYNAMIC SMOOTHNESS. REFER TO 51-10-01

Sanding and Overlap Requirements
Figure 4

135339

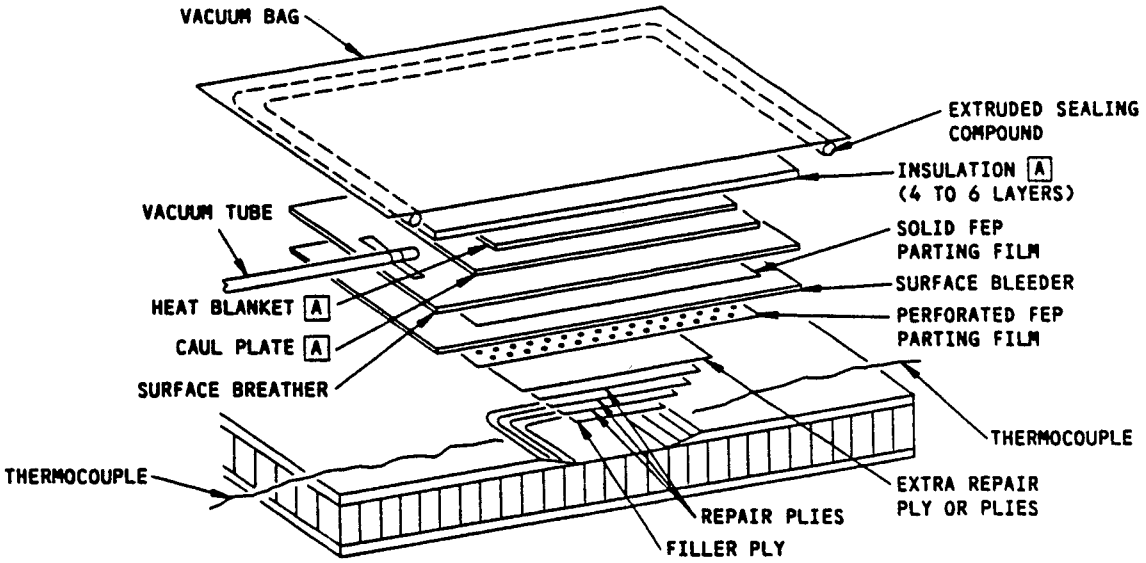

HONEYCOMB PANEL SHOWN
SOLID LAMINATE SIMILAR

BAGGING SEQUENCE FOR SKIN PLY REPAIR

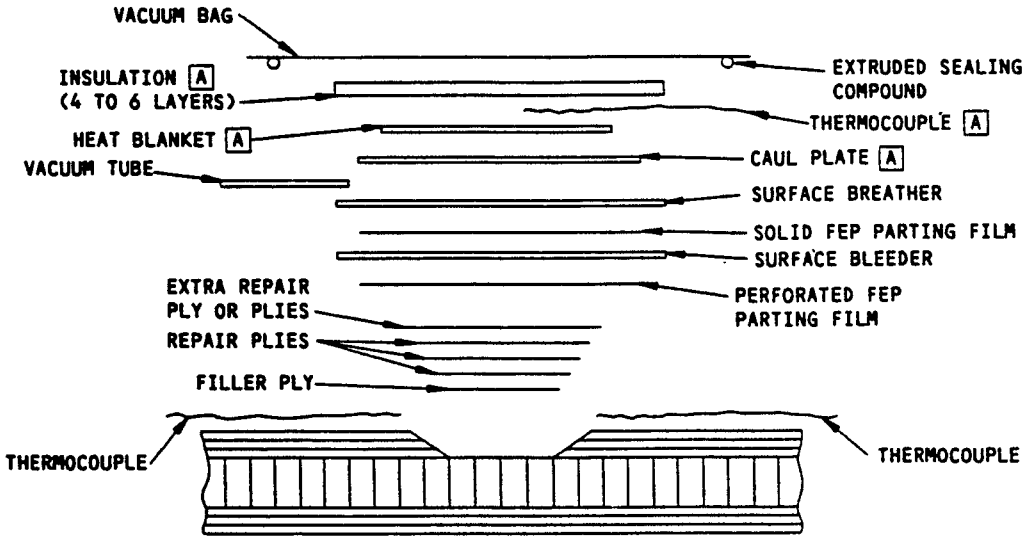

SECTION THRU SKIN PLY REPAIR

NOTES

[A] USE ONLY IF HEAT BLANKET IS USED AS A HEAT SOURCE

Application of Pressure During Cure
Figure 5 (Sheet 1)

135360

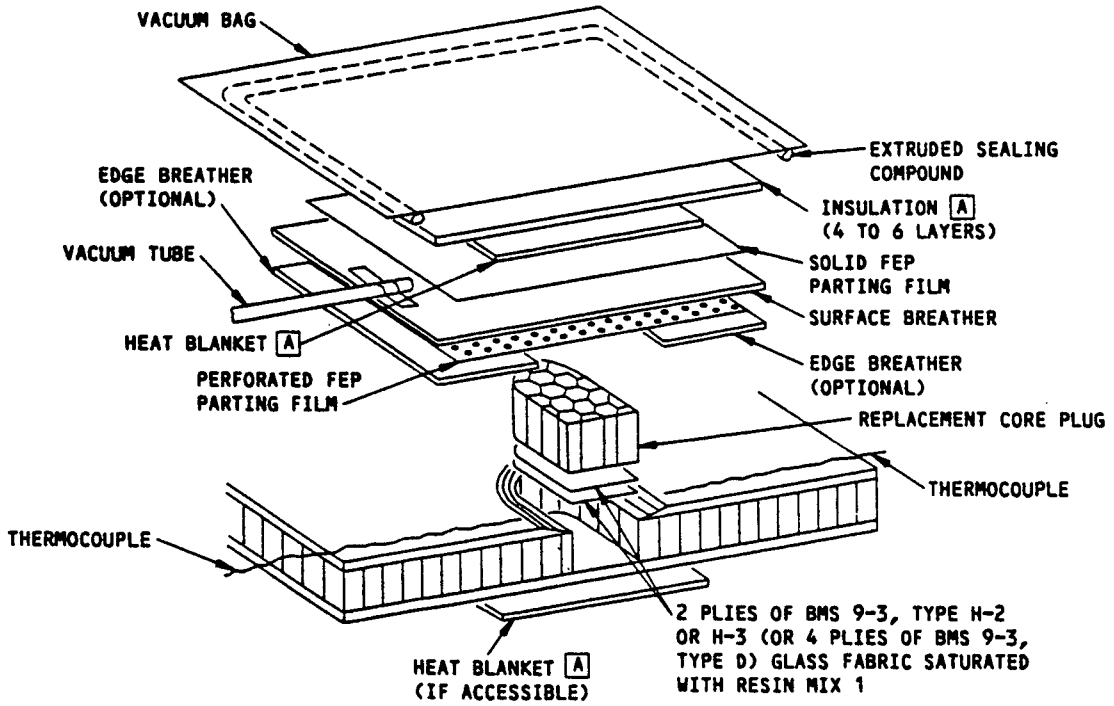

BAGGING SEQUENCE FOR CORE REPLACEMENT

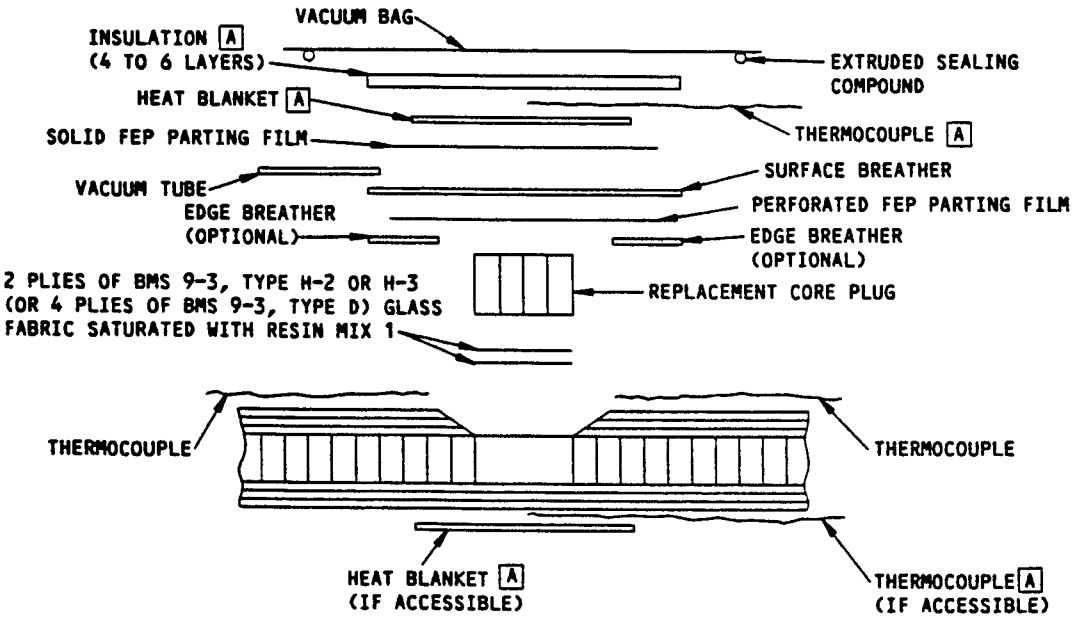

SECTION THRU CORE REPLACEMENT REPAIR

Application of Pressure During Cure
Figure 5 (Sheet 2)

135340

ORIGINAL PLY MATERIAL		REPAIR PLY MATERIAL	REPAIR PLY SUBSTITUTE MATERIAL
GLASS FABRIC	BMS 8-79, TYPE 120	BMS 9-3, TYPE D [A]	BMS 9-3, TYPE H-2 OR H-3 [A] [B]
	BMS 8-139, TYPE 120		
	BMS 8-79, TYPE 1581	BMS 9-3, TYPE H-2 [A]	BMS 9-3, TYPE D OR H-3 [A] [C] [D]
	BMS 8-139, TYPE 181		
ARAMID FABRIC	BMS 8-218, STYLE 120	BMS 9-3, TYPE D [A] (GLASS FABRIC)	BMS 9-3, TYPE H-2 OR H-3 [A] [B]
	BMS 8-219, STYLE 120		
	BMS 8-218, STYLE 285	BMS 9-3, TYPE H-2 OR H-3 [A] (GLASS FABRIC)	BMS 9-3, TYPE D [A] [C]
	BMS 8-219, STYLE 285		
GRAPHITE TAPE	BMS 8-168, TYPE II, CLASS 1, ALL GRADES	BMS 9-8, TYPE I, CLASS 2, STYLE 3K-70-P [E] (GRAPHITE FABRIC)	NONE
	BMS 8-212, TYPE II, CLASS 1 OR 3, ALL GRADES		
GRAPHITE FABRIC	BMS 8-168, TYPE II, CLASS 2, STYLE 3K-70-PW	BMS 9-8, TYPE I, CLASS 2, STYLE 3K-70-P	NONE
	BMS 8-212, TYPE IV, CLASS 2, STYLE 3K-70-PW		
	BMS 8-256, TYPE I, CLASS 2, STYLE 3K-70-PW		
	BMS 8-258, CLASS 2, STYLE 3K-70-PW		
	BMS 8-212, TYPE III, CLASS 2, STYLE 3K-135-8H	BMS 9-8, TYPE I, CLASS 2, STYLE 3K-135-8H	NONE
ALUMINUM FOIL/GLASS FABRIC	BMS 8-289, TYPE 120, ALL CLASSES AND GRADES	BMS 9-3, TYPE D [A]	NONE
ALUMINUM COATED GLASS FABRIC	BMS 8-278, TYPE I, ALL CLASSES	BMS 9-3, TYPE H-2 OR H-3 [A]	NONE
	BMS 8-278, TYPE II, ALL CLASSES	BMS 9-3, TYPE D [A]	NONE

REPAIR PLY MATERIALS AND SUBSTITUTE MATERIALS
TABLE I

NOTES

[A] BMS 9-3, CLASSES 2, 5 THRU 13, OR 16 THRU 19 CAN BE USED. CLASS 7 IS RECOMMENDED BECAUSE IT IS KNOWN TO HAVE GOOD STORAGE LIFE.

[B] USE ONE PLY OF TYPE H-2 OR H-3 IN PLACE OF TWO PLIES OF TYPE D

[C] USE THREE PLIES OF TYPE D IN PLACE OF ONE PLY OF TYPE H-2 OR H-3

[D] USE ONE PLY OF TYPE H-3 IN PLACE OF ONE PLY OF TYPE H-2

[E] FOR NUMBER OF GRAPHITE FABRIC PLIES REQUIRED, SEE TABLE II

Repair Ply Materials
Figure 6 (Sheet 1)

NUMBER OF PLIES					
ORIGINAL PLIES (GRAPHITE TAPE)				REPAIR PLIES (GRAPHITE FABRIC)	
TAPE GRADE	ORIGINAL PLY ORIENTATION			REPAIR PLY ORIENTATION	
	0° OR 90°	+45°	-45°	0° OR 90°	±45°
95	1	---	---	1	---
	---	1	---	---	1
	---	---	1	---	1
	---	1	1	---	1
145	1	---	---	1	1
	---	1	---	---	1
	---	---	1	---	1
190	1	---	---	2	---
	---	1	---	---	1
	---	---	1	---	1

SUBSTITUTION OF GRAPHITE FABRIC FOR GRAPHITE TAPE
TABLE II

Repair Ply Materials
Figure 6 (Sheet 2)

135341

COMPONENT MATERIAL	EXTRA PLY MATERIAL
GRAPHITE/ARAMID/GLASS HYBRID	BMS 9-8, TYPE I, CLASS 2, STYLE 3K-70-P [A]
GRAPHITE	BMS 9-8, TYPE I, CLASS 2, STYLE 3K-70-P
ARAMID	BMS 9-3, TYPE D, H-2, OR H-3

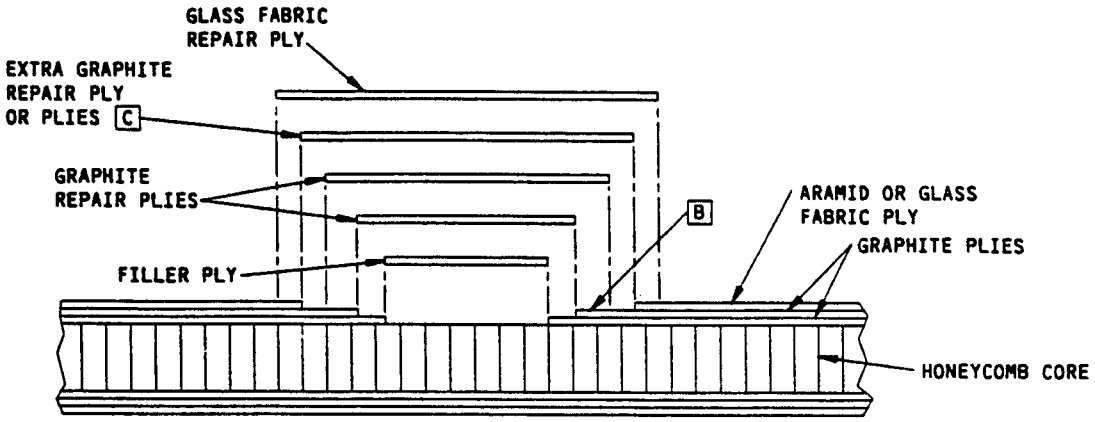

HONEYCOMB PANEL SHOWN
SOLID LAMINATE SIMILAR
DETAIL I

NOTES

[A] ON ALL HYBRID PANELS, AVOID BONDING GLASS FABRIC PLIES BETWEEN GRAPHITE PLIES. SEE DETAIL I

[B] THE EXISTING OUTER PLY OF ARAMID OR GLASS FABRIC MUST BE STEP OR TAPER SANDED TO ALLOW AN ADDITIONAL OVERLAP OF 1.00 INCH FOR EACH EXTRA GRAPHITE REPAIR PLY

[C] LOCATE THE EXTRA GRAPHITE REPAIR PLY AT THIS LOCATION TO AVOID BONDING GLASS FABRIC PLIES BETWEEN GRAPHITE PLIES

Extra Repair Ply Materials
Figure 7

135362

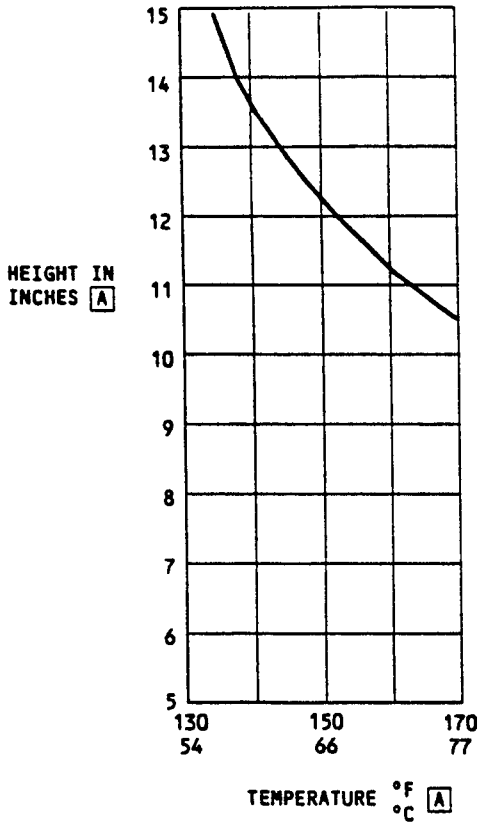

HEAT LAMP TEMPERATURE CURVE

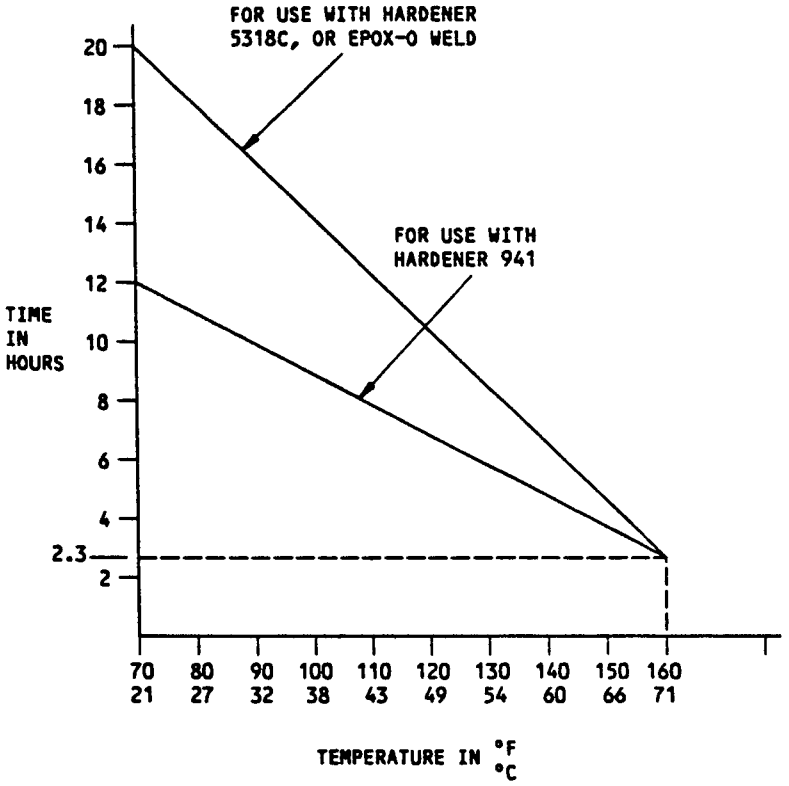

NOTES

- USE THERMOCOUPLES TO MONITOR TEMPERATURE

A THE HEIGHT IN INCHES OF 250 WATT HEAT LAMP FROM THE SURFACES OF THE PATCH VS TEMPERATURE AT SURFACE OF PART

Sealer Resin Cure Temperature and Heat Lamp Temperature Curve
Figure 8

135343

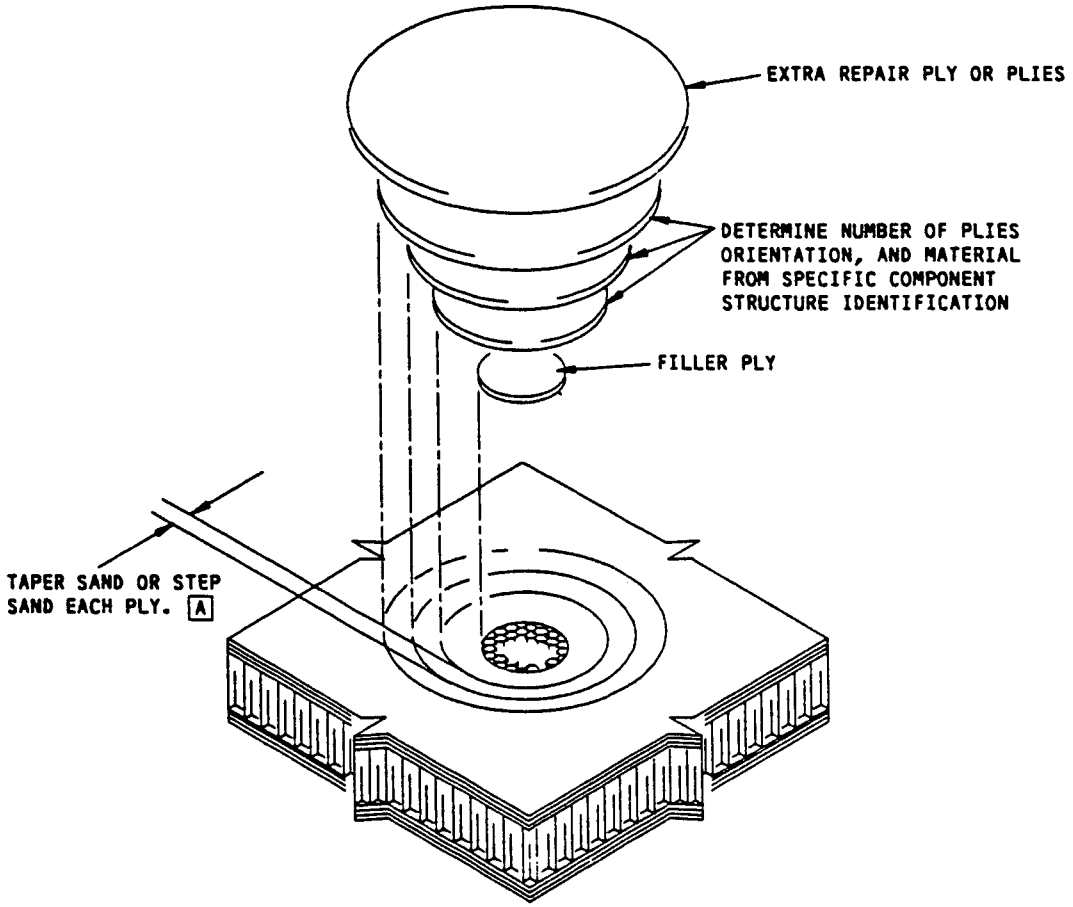

NOTES

A FOR EXTERNAL SKINS, TAPER SANDING IS RECOMMENDED. TAPER SAND SURFACES IN AREAS OF CRITICAL AERODYNAMIC SMOOTHNESS. REFER TO 51-70

Repair 1 - Repair of Damage to One Skin of Honeycomb Panel
Figure 9

135364

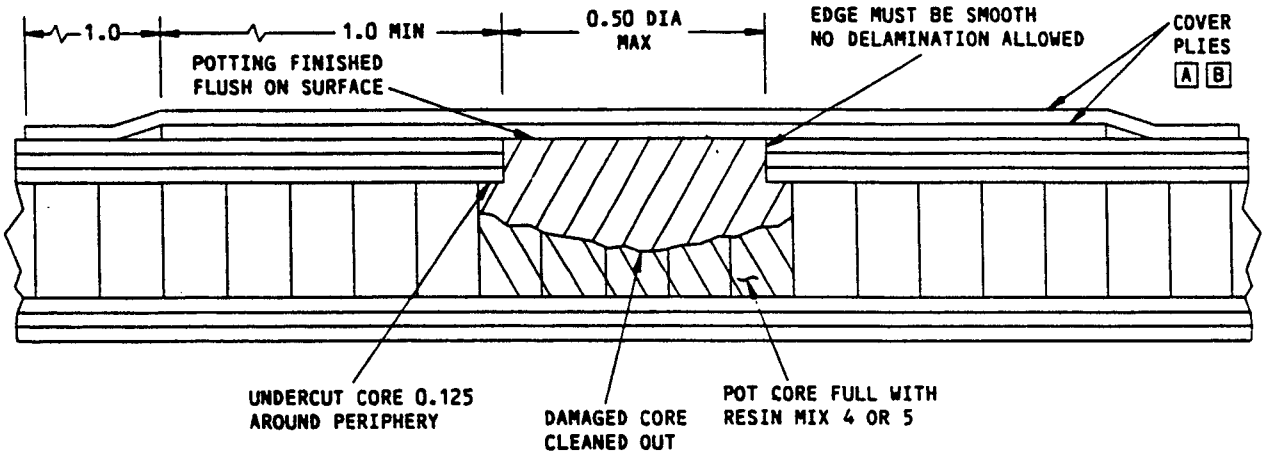

TYPICAL SECTION

NOTES

- OVERLAP COVER PLIES PER FIG. 4. DO NOT TAPER SAND OR STEP SAND ANY PLIES

A ORIENT COVER PLIES IN THE SAME DIRECTION AS THE ORIGINAL OUTER LAYER

B IF THE ORIGINAL SURFACE PLY IS ARAMID OR GLASS FABRIC, PREPARE AND APPLY TWO PLIES OF BMS 9-3, TYPE H-2 OR H-3 GLASS FABRIC PER PAR. 2.E. IF THE ORIGINAL SURFACE PLY IS GRAPHITE TAPE OR FABRIC, PREPARE AND APPLY TWO PLIES OF BMS 9-8, TYPE I, CLASS 2, STYLE 3K-70-P GRAPHITE FABRIC PER PAR. 2.E. ORIENTATION IS TO BE THE SAME AS THE ORIGINAL SURFACE PLY

Repair 2 - Repair of Damage, 0.50-inch Diameter or Less, to One Skin and Honeycomb Core
Figure 10

135344

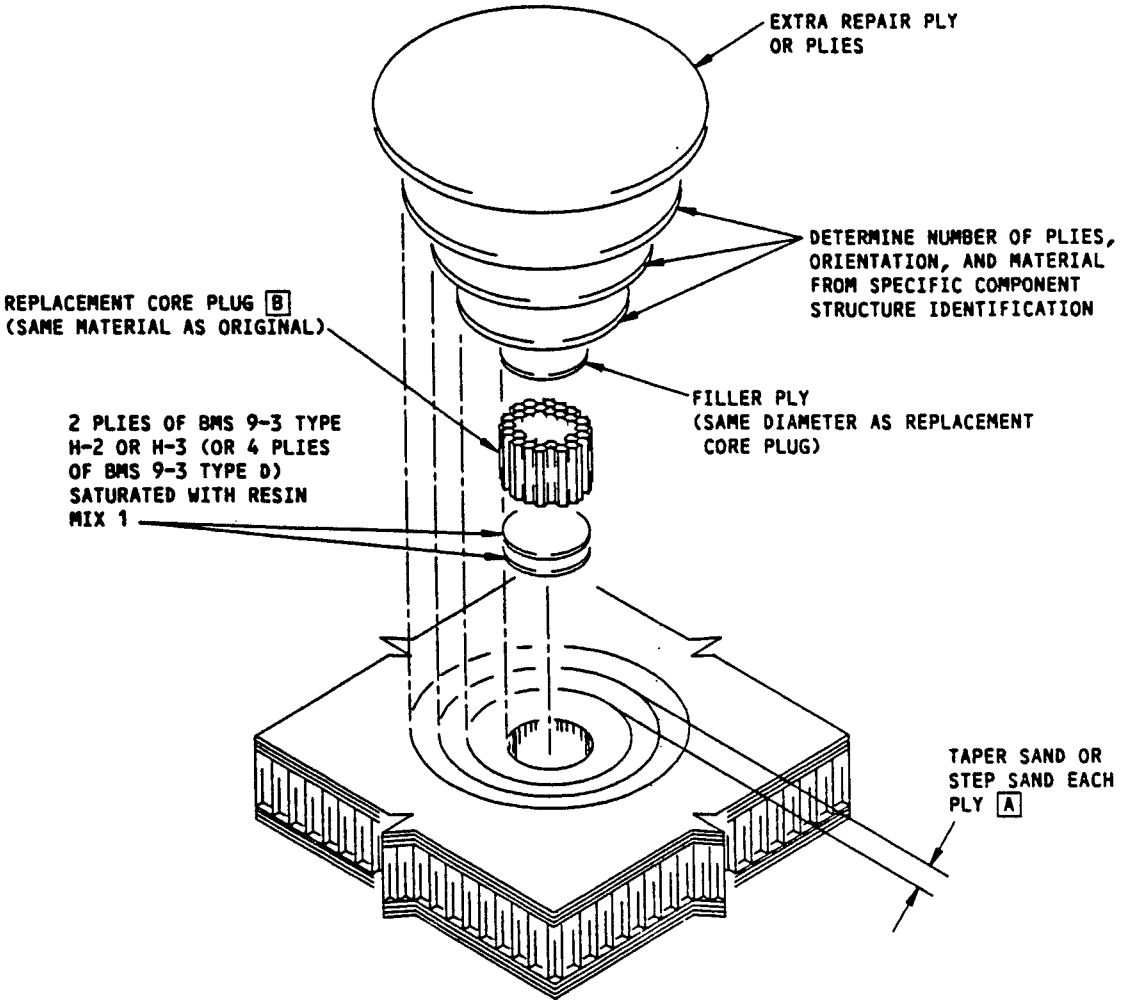

NOTES

A FOR EXTERNAL SKINS, TAPER SANDING IS RECOMMENDED. TAPER SAND SURFACES IN AREAS OF CRITICAL AERODYNAMIC SMOOTHNESS. REFER TO 51-70

B APPLY RESIN MIX 3 AROUND REPLACEMENT CORE PLUG OR ORIGINAL CORE

Repair 3 - Repair of Damage, Greater Than 0.50-inch Diameter, to One Skin and Honeycomb Core

135365

Figure 11

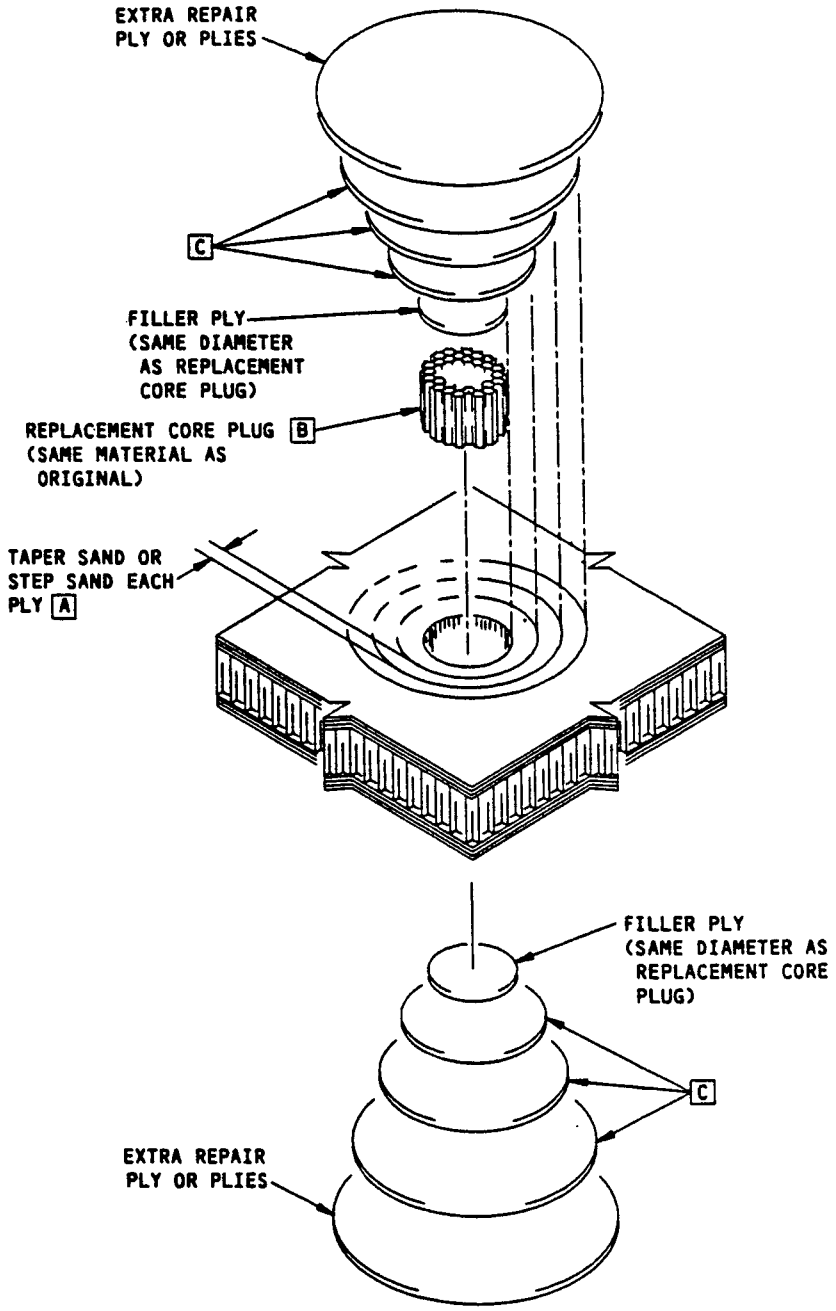

NOTES

A FOR EXTERNAL SKINS, TAPER SANDING IS RECOMMENDED. TAPER SAND SURFACES IN AREAS OF CRITICAL AERODYNAMIC SMOOTHNESS. REFER TO 51-70

B APPLY RESIN MIX 3 AROUND REPLACEMENT CORE PLUG OR ORIGINAL CORE

C DETERMINE NUMBER OF PLIES, ORIENTATION, AND MATERIAL FROM SPECIFIC COMPONENT STRUCTURE IDENTIFICATION

Repair 4 - Repair of Damage to Both Skins and Honeycomb Core
Figure 12

135345

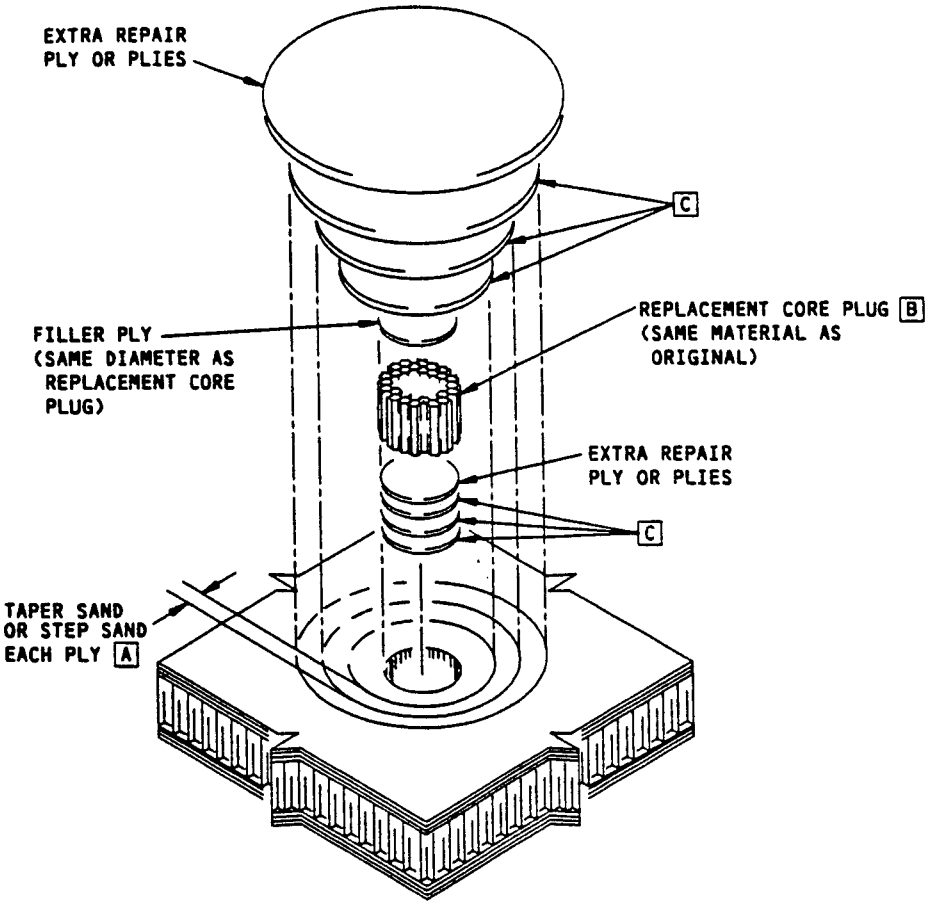

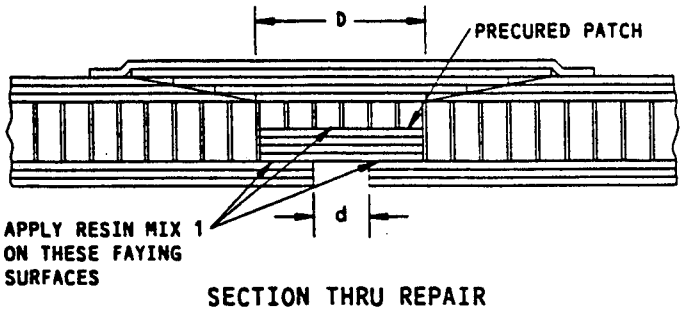

SECTION THRU REPAIR

NOTES

- D = d + 2N WHERE:
  N = NUMBER OF PLIES IN THE INNER SKIN
  d = DIAMETER OF CLEANED UP DAMAGE (1.00 INCH MAX)

A FOR EXTERNAL SKINS TAPER SANDING IS RECOMMENDED. TAPER SAND SURFACES IN AREAS OF CRITICAL AERODYNAMIC SMOOTHNESS. REFER TO 51-70

B APPLY RESIN MIX 3 AROUND REPLACEMENT CORE PLUG OR ORIGINAL CORE

C DETERMINE NUMBER OF PLIES, ORIENTATION, AND MATERIAL FROM SPECIFIC COMPONENT STRUCTURE IDENTIFICATION

Repair 5 - Repair of Damage to Honeycomb Panel Where Access is Limited to One Side
Figure 13

135366

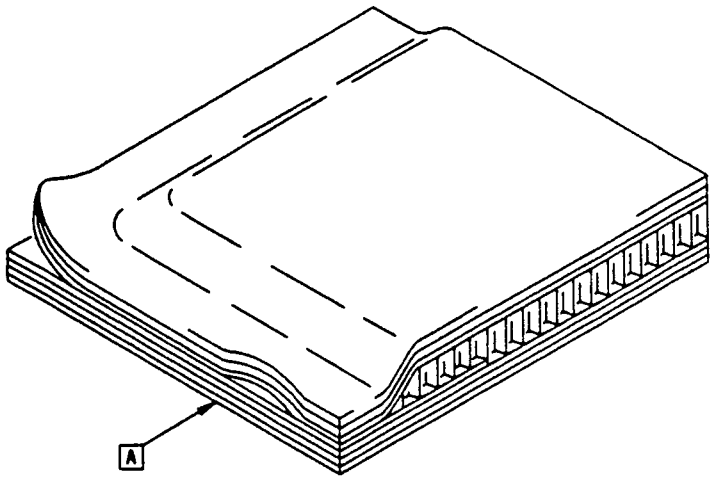

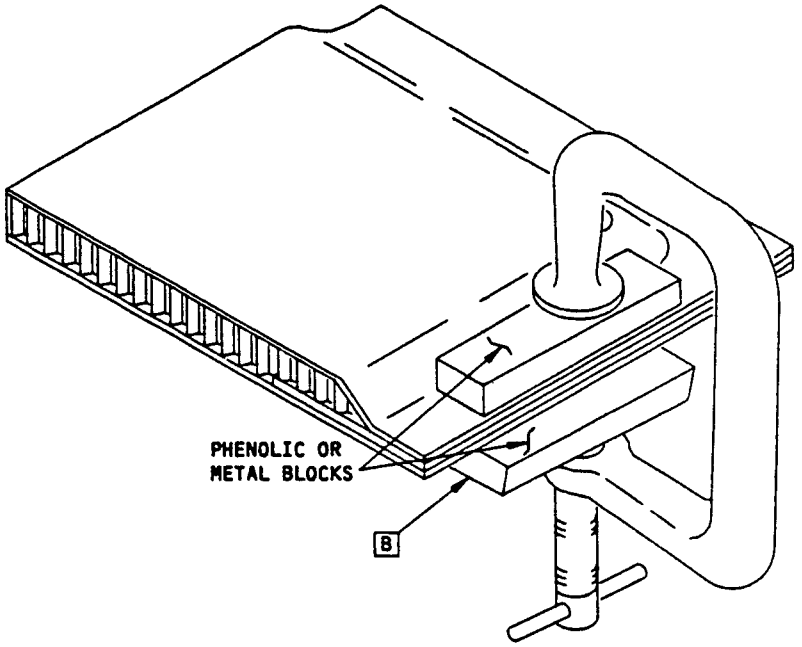

NOTES

- REFER TO PAR. 3.F. FOR COMPLETE REPAIR INSTRUCTIONS

A FORCE RESIN MIX 1 INTO DELAMINATED AREA

B CLAMP PLIES TOGETHER AND CURE

Repair 6 - Repair of Delaminations Between Plies of Panel Edgeband
Figure 14

135347

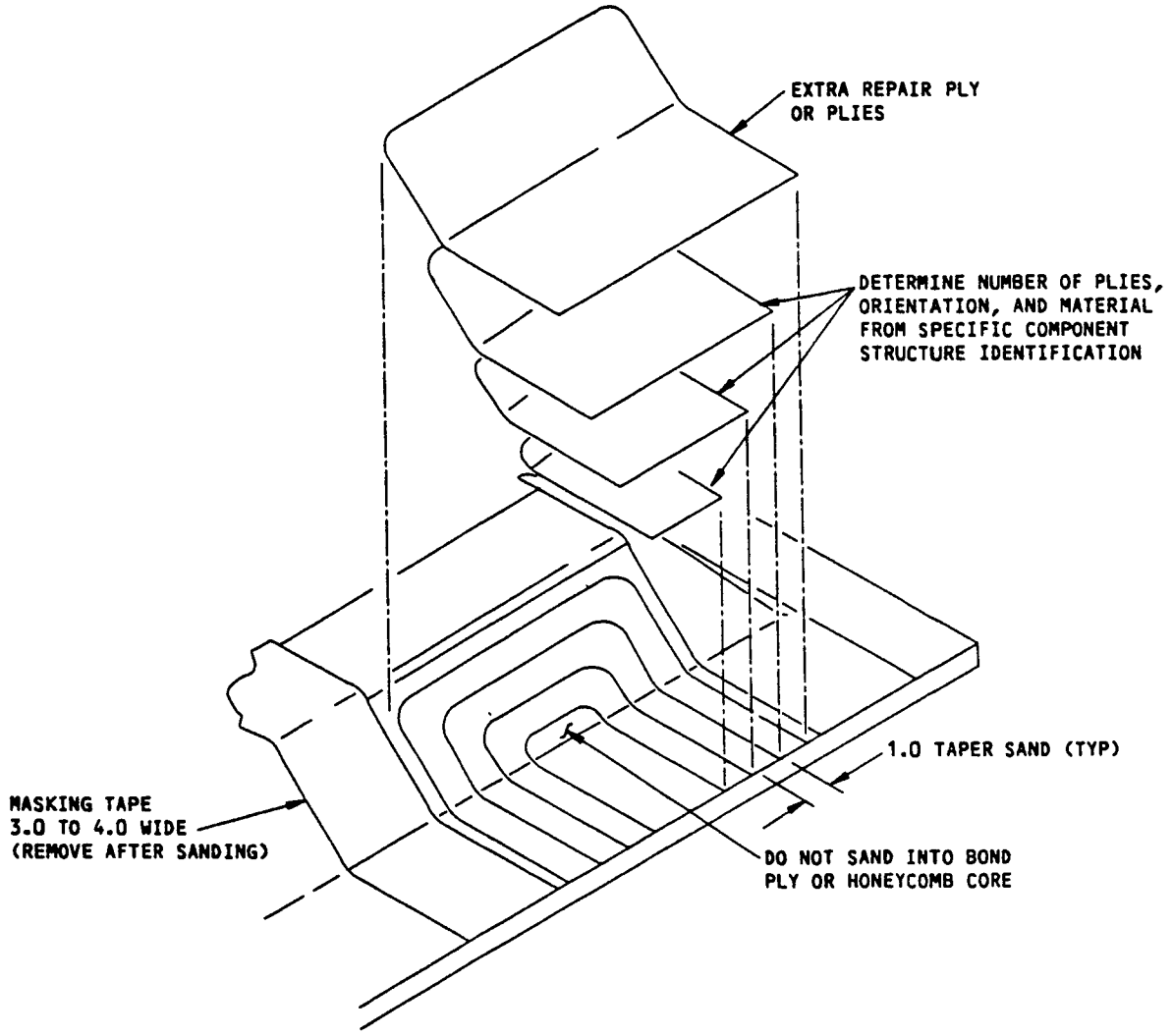

Repair 7 - Repair Of Damage to Plies On Edge of Honeycomb Panel
Figure 15

135367

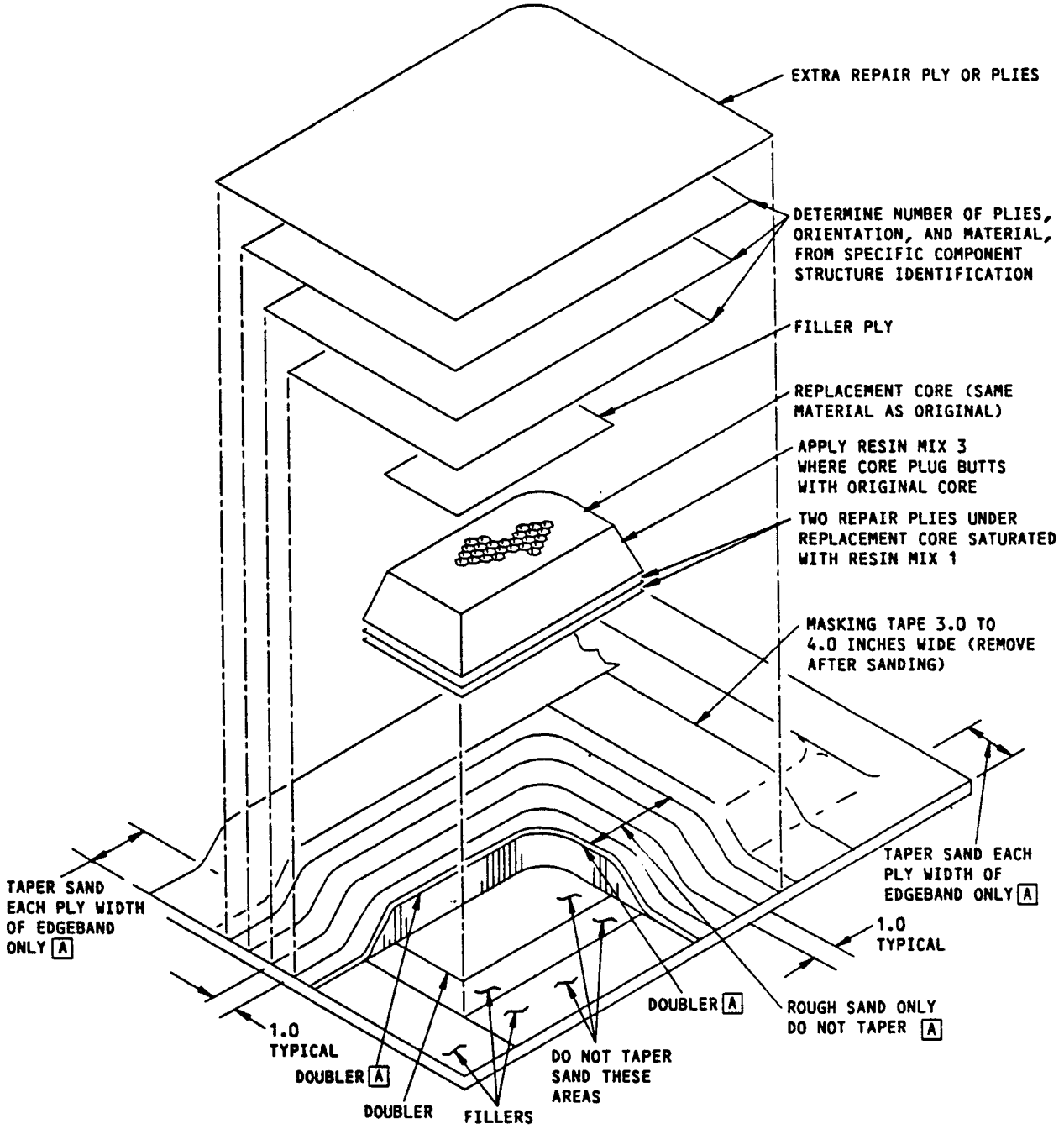

NOTES

A DO NOT TAPER SAND SKIN OR DOUBLER PLIES OVER CORE

Repair 8 - Repair of Damage to Honeycomb Core on Edge of Honeycomb Panel
Figure 16

135349

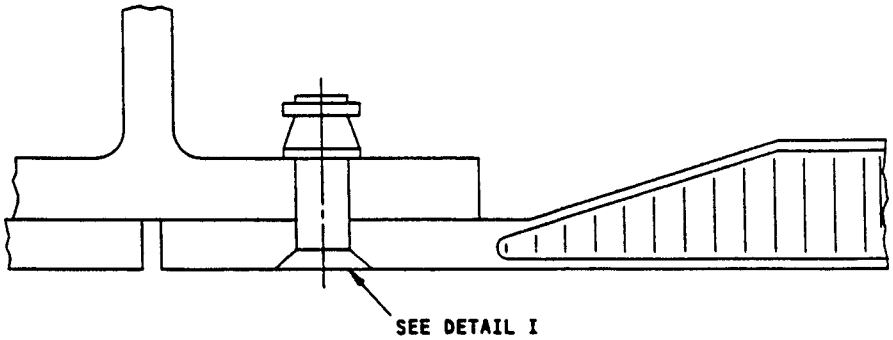

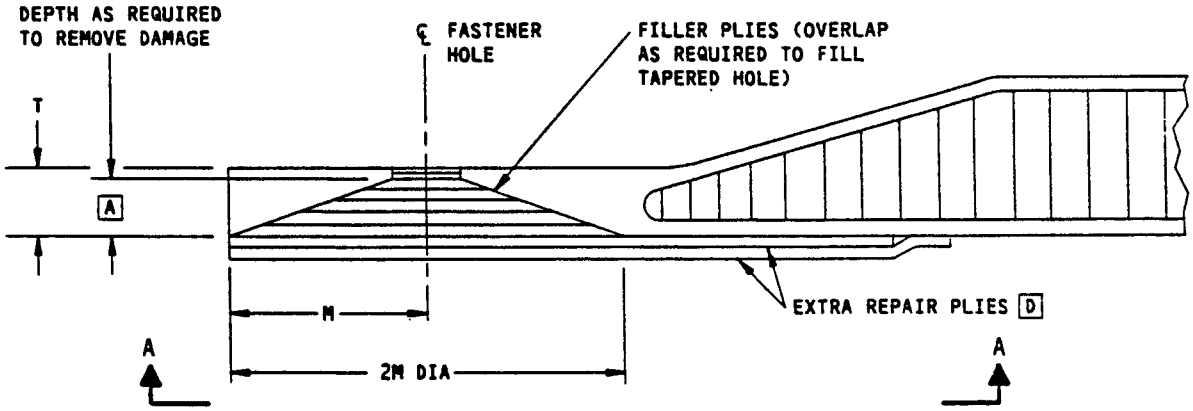

REPAIR OF HONEYCOMB PANEL SHOWN
REPAIR OF SOLID LAMINATE SIMILAR

DETAIL I

NOTES

- M = 5T MAXIMUM AS SHOWN, WHERE T IS THE THICKNESS OF THE EDGEBAND. DO NOT CUT INTO CORE
- THIS REPAIR APPLIES ONLY WHERE NO MORE THAN TWO ATTACH HOLES ARE DAMAGED IN ANY TEN CONSECUTIVE ATTACH HOLES
- D EQUALS FASTENER DIAMETER

A APPLY FILLER PLIES AS REQUIRED TO FILL THE DAMAGED AREA

B EXTEND EXTRA REPAIR PLY FAR ENOUGH SO THAT IT EXTENDS AT LEAST 1.00 INCH PAST EDGE OF DAMAGED AREA

C EXTEND EXTRA REPAIR PLY FAR ENOUGH TO PROVIDE AT LEAST 2D EDGE MARGIN

D ORIENT EXTRA REPAIR PLIES IN THE SAME DIRECTION AS THE ORIGINAL OUTER LAYER

Repair 9 - Repair of Damaged Panel Attach Hole in Honeycomb Panel Edgebands or Along Edges of Solid Laminate Panels
Figure 17 (Sheet 1)

135368

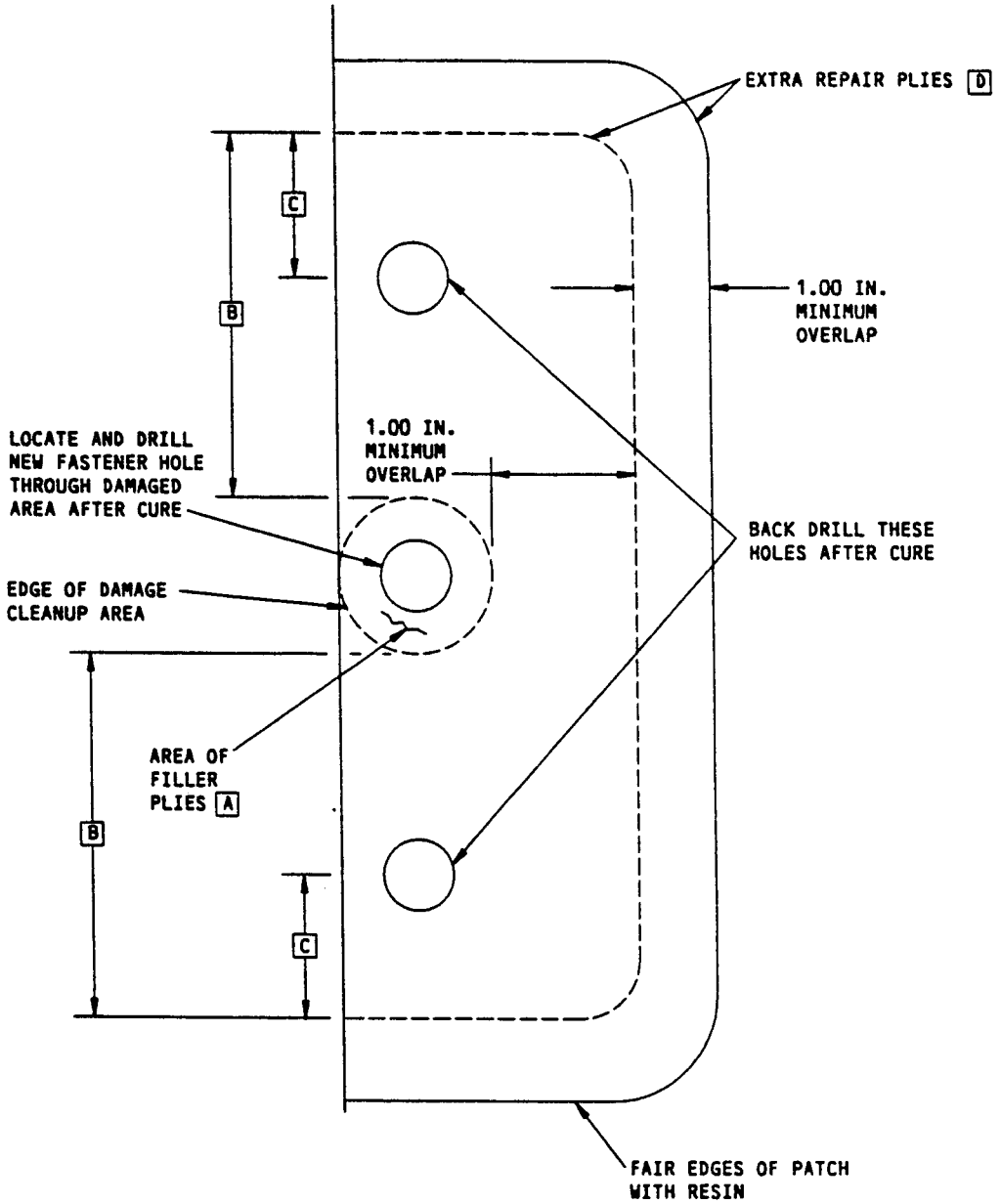

SECTION A-A

Repair 9 - Repair of Damaged Panel Attach Hole in Honeycomb Panel Edgebands or Along Edges of Solid Laminate Panels
Figure 17 (Sheet 2)

135352

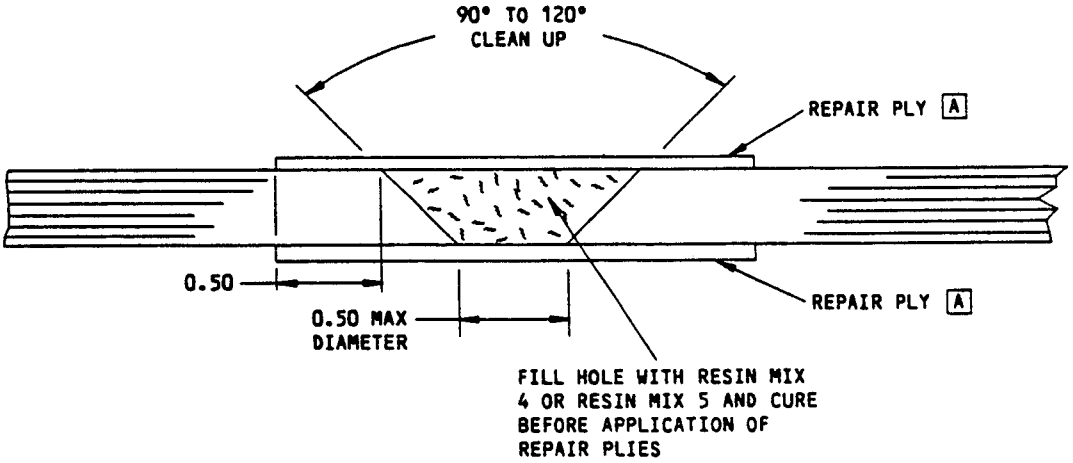

NOTES

A IF THE ORIGINAL SURFACE PLY IS ARAMID OR GLASS FABRIC, PREPARE AND APPLY ONE PLY OF BMS 9-3, TYPE H-2 OR H-3 GLASS FABRIC PER PAR. 2.E. IF THE ORIGINAL SURFACE PLY IS GRAPHITE TAPE OR FABRIC, PREPARE AND APPLY ONE PLY OF BMS 9-8, TYPE I, CLASS 2, STYLE 3K-70-P GRAPHITE FABRIC PER PAR. 2.E. ORIENTATION IS TO BE THE SAME AS THE ORIGINAL SURFACE PLY

Repair 10 - Repair of Damage, 0.50-inch Diameter or Less, to Solid Laminates 135369
Figure 18

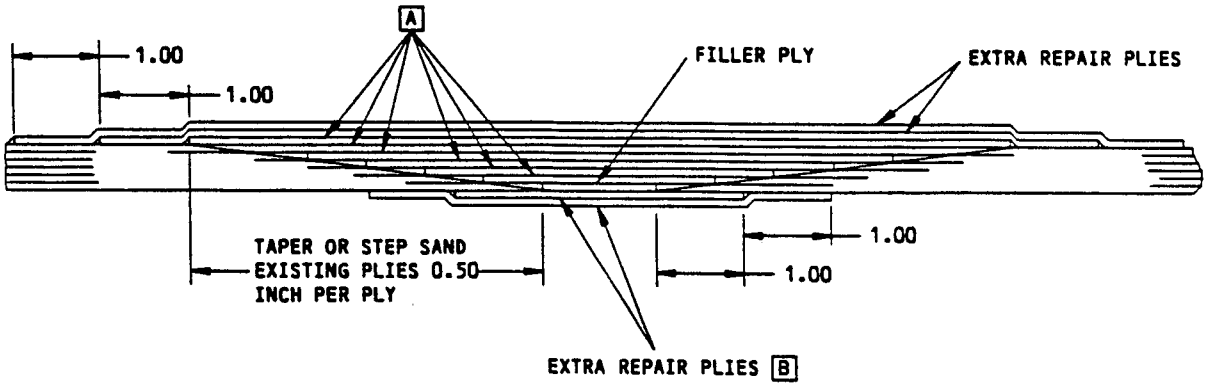

NOTES

A DETERMINE NUMBER OF PLIES, ORIENTATION, AND MATERIAL FROM SPECIFIC COMPONENT STRUCTURE IDENTIFICATION

B EXTRA REPAIR PLIES AT THIS LOCATION ARE REQUIRED ONLY IF THE DAMAGE PENETRATES THIS SURFACE

Repair 11 - Repair of Damage, Greater than 0.50-inch Diameter, to Solid Laminates
Figure 19

135353

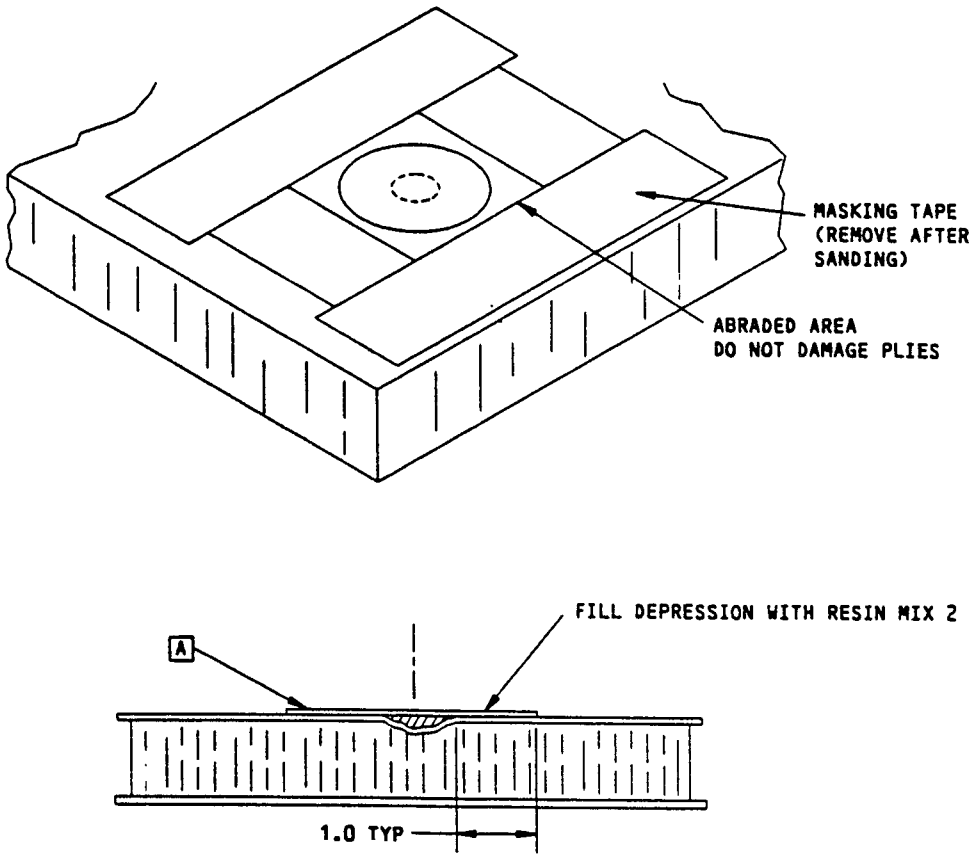

NOTES

A IF THE ORIGINAL SURFACE PLY IS ARAMID OR GLASS FABRIC, PREPARE AND APPLY ONE PLY OF BMS 9-3, TYPE H-2 OR H-3 GLASS FABRIC PER PAR. 2.E. IF THE ORIGINAL SURFACE PLY IS GRAPHITE TAPE OR FABRIC, PREPARE AND APPLY ONE PLY OF BMS 9-8, TYPE I, CLASS 2, STYLE 3K-70-P GRAPHITE FABRIC PER PAR. 2.E. ORIENTATION IS TO BE THE SAME AS THE ORIGINAL SURFACE PLY

Repair 12 - Repair of Dents
Figure 20

135370

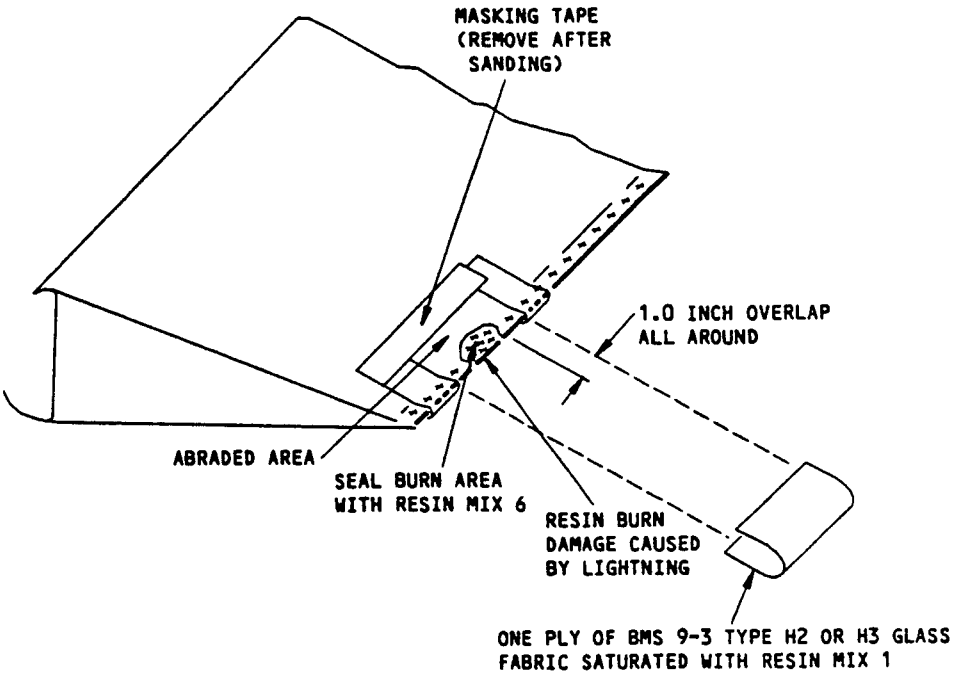

Repair 13 - Repair of Lightning Damage at Trailing Edge
Figure 21

135354

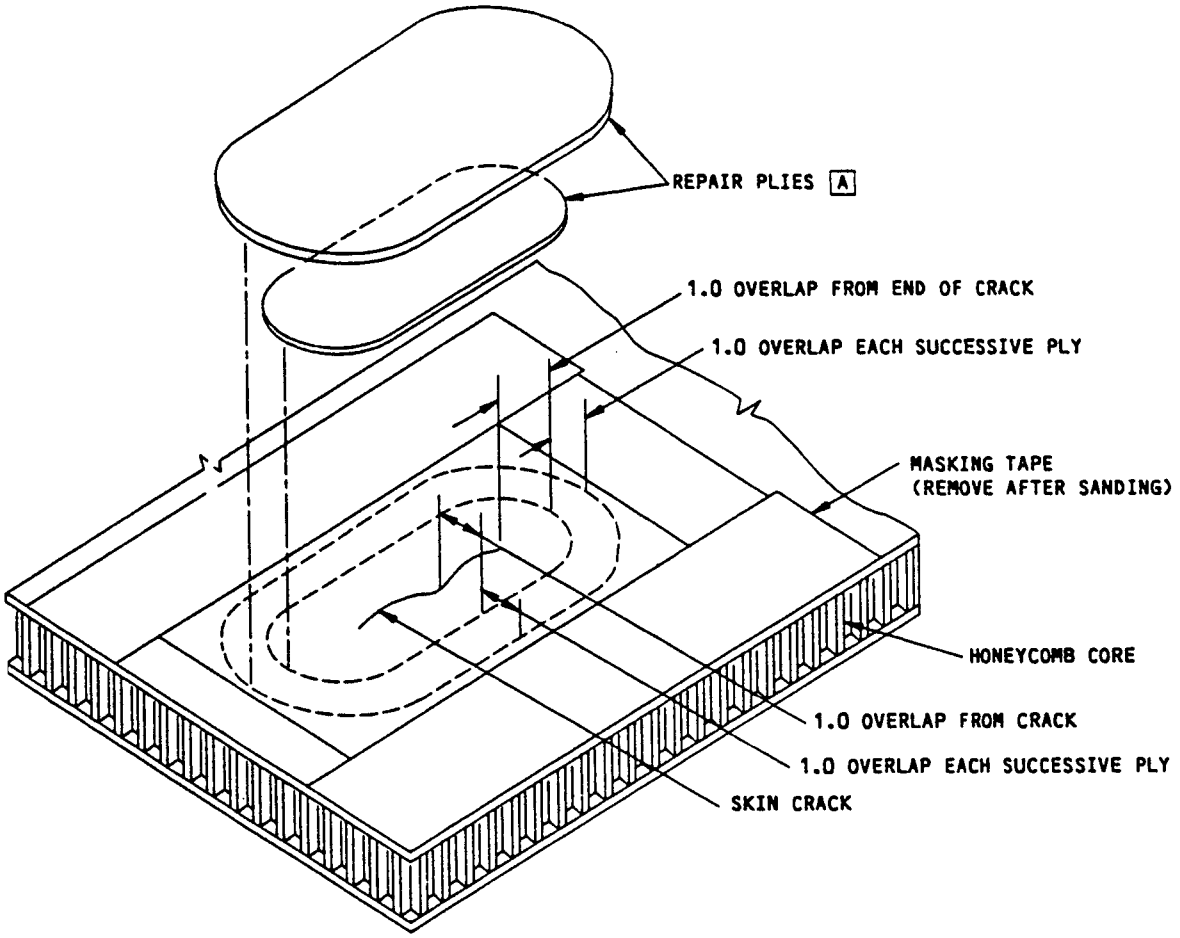

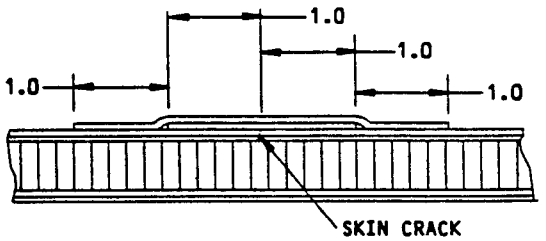

SECTION VIEW

NOTES

A NUMBER OF REPAIR PLIES WILL VARY WITH EXTENT OF DAMAGE AND MATERIAL OF ORIGINAL STRUCTURE

Repair 14 - Repair of Small Damage to One Skin
Figure 22

135371

GRAPHITE, ARAMID, AND GRAPHITE/ARAMID/GLASS HYBRID REINFORCED EPOXY LAMINATES AND NONMETALLIC HONEYCOMB SANDWICH REPAIRS - 250°F (121°C) CURE

1. General

A. These repairs will not have an effect on a Structurally Significant Item (SSI) given in SRM 51-00-4, Fig. 3. Thus, no change to the Supplemental Structural Inspection Document (SSID) inspection program is necessary.

WARNING: SOME EQUIPMENT USED FOR HEAT CURING REPAIRS MAY CONSTITUTE A FIRE OR EXPLOSION HAZARD WHEN USED IN THE VICINITY OF AN AIRPLANE WHICH CONTAINS, OR HAS CONTAINED FUEL. CONSULT THE LOCAL FIRE DEPARTMENT FOR AUTHORITY TO USE SPECIFIC EQUIPMENT. NONCOMPLIANCE COULD CAUSE PERSONNEL INJURY.

BREATHING VAPORS OR ALLOWING SOLVENT TO CONTACT SKIN OR EYES IS HAZARDOUS. WEAR NEOPRENE GLOVES WITH COTTON LINERS, PROTECTIVE CLOTHING, AND EYE GOGGLES. IF CHEMICAL CONTACT OCCURS, WASH THOROUGHLY WITH WATER. IF CHEMICAL SHOULD SPLASH INTO EYES, FLUSH EYES WITH LARGE QUANTITIES OF WATER AND SEEK MEDICAL AID. USE MECHANICAL VENTILATION OR RESPIRATORY PROTECTION WHEN WORKING IN A CONFINED SPACE OR AREA.

DO NOT BREATHE CARBON FIBER DUST. MAKE SURE THAT THERE IS A GOOD FLOW OF AIR WHERE YOU DO THE WORK. USE EQUIPMENT TO HELP YOU BREATHE WHEN YOU WORK IN A CONFINED SPACE. USE A VACUUM NEAR THE SOURCE OF THE DUST TO REMOVE THE DUST FROM THE AIR. IF YOU DO NOT OBEY, YOU CAN CAUSE INJURY.

CAUTION: FASTENERS INSTALLED IN GRAPHITE COMPOSITE STRUCTURE MUST BE BARE OR BMS 10-85 COATED TITANIUM, OR CORROSION RESISTANT STEEL. CADMIUM PLATED CORROSION RESISTANT STEEL MAY ALSO BE USED. ALUMINUM OR ALLOY STEEL FASTENERS ARE NOT ALLOWED IN GRAPHITE COMPOSITE STRUCTURES

WHEN REINSTALLING ALUMINUM FITTINGS ON GRAPHITE COMPOSITE STRUCTURE, ENSURE THAT THE ORIGINAL CORROSION PROTECTIVE TREATMENT IS MAINTAINED. INSTALL FITTINGS WITH FAYING SURFACE SEAL USING BMS 5-26 IN FUEL TANK AREAS OR BMS 5-95 IN ALL OTHER AREAS.

DO NOT USE 350°F (177°C) CURE MATERIALS IN THESE REPAIRS. FAILURE TO COMPLY WILL RESULT IN A RUINED REPAIR.

DO NOT LET CARBON FIBER DUST GO INTO ELECTRICAL EQUIPMENT. CARBON FIBER DUST IS ELECTRICALLY CONDUCTIVE AND IT CAN CAUSE SHORT CIRCUITS IF IT GOES INTO ELECTRICAL EQUIPMENT. USE A VACUUM NEAR THE SOURCE OF THE DUST TO REMOVE THE DUST FROM THE AIR. IF YOU DO NOT OBEY, YOU CAN CAUSE DAMAGE TO THE ELECTRICAL EQUIPMENT.

BOEING PROPRIETARY - Copyright © - Unpublished Work - See title page for details.

B. This subject contains repairs to components made from epoxy resin reinforced with several layers of graphite tape or fabric, aramid fabric, or a combination of graphite tape or fabric, aramid fabric, or glass fabric (hybrids). The most common construction is a sandwich of two laminated skins separated by a nonmetallic honeycomb core. Solid laminate is used for small components, honeycomb panel edgebands, some primary and secondary structure, and at fitting locations. Glass fabric is also known as fiberglass cloth. This subject describes repairs made using 250°F (121°C) cure materials (prepreg layup).

CAUTION: TO GET AN ACCEPTABLE QUALITY REPAIR, DO AS FOLLOWS:

- REFER TO THE APPLICABLE COMPONENT WHICH YOU ARE GOING TO REPAIR FOR THE REPAIR LIMITS AND MATERIAL OF THE COMPONENT BEFORE YOU USE THESE REPAIR INSTRUCTIONS. 250°F (121°C) CURE REPAIRS ARE APPLICABLE TO THE COMPONENTS AS SHOWN IN THE REPAIR INSTRUCTIONS FOR THAT COMPONENT.

- USE THE CORRECT MATERIALS FOR THE TYPE OF COMPONENT AND REPAIR THAT IS MADE.

- USE THE MATERIALS THAT AGREE WITH THE SPECIFICATIONS IN THE SRM.

- ACCURATELY FOLLOW THE SRM PROCEDURES AT EACH STEP OF THE REPAIR. IF YOU DO NOT DO THIS, IT CAN CAUSE A REPAIR THAT IS NOT SATISFACTORY AND NOT APPROVED.

250°F (121°C) CURE REPAIRS WILL NOT RESTORE THE STRENGTH OR DURABILITY OF COMPONENTS ORIGINALLY MADE USING 350°F (177°C) CURE MATERIALS. THEIR USE IS RESTRICTED AS SHOWN IN THE SPECIFIC COMPONENT STRUCTURE REPAIR SUBJECT. FAILURE TO COMPLY WILL RESULT IN AN UNACCEPTABLE AND UNAUTHORIZED REPAIR.

C. Specific allowable damage, repair limitations, and repair data, can be found in the chapter/section/subject associated with each structural component.

D. Use suitable holding fixtures for large repairs to prevent distortion of the structure.

E. Perform the repair procedure specified herein only in areas of reasonable cleanliness. Areas containing oil mist, exhaust fumes, gases, soot, rain, dust, or other particulate matter are specifically prohibited.

F. Protect surfaces from contamination. Do not touch cleaned parts or adhesive with bare hands. Use clean white gloves when handling parts.

BOEING PROPRIETARY - Copyright © - Unpublished Work - See title page for details.

G. Store BMS 5-90 foaming adhesive below 0°F (-18°C). Store BMS 5-51, BMS 5-80, BMS 5-101, and BMS 5-129 adhesive films below 0°F (-18°C). Store BMS 8-79, 8-168, 8-219, and 8-289 prepreg materials below 10°F (-12°C). Store all materials in sealed moisture proof bags. An identification label must accompany the material inside the bag with the following information: BMS Type, Class, Grade, supplier name, batch number, roll number, prepreg lot number, and date of preparation. Record storage time in and out of refrigeration.

H. Store resin mix 1, BMS 5-25 adhesive, and BMS 5-92 adhesive at 40°F (5°C) or 80°F (27C) in sealed containers. An identification label must accompany the material inside the bag, with the following information: BMS Type, Class, grade, supplier name, batch number, and data of preparation.

I Refer to SRM 51-20-00 for source of repair materials and equipment.

J. Refer to SRM 51-10-07 for hole drilling and machining of composite structure.

K. Refer to SRM 51-70 for aerodynamic smoothness requirements.

BOEING PROPRIETARY - Copyright © - Unpublished Work - See title page for details.

L. See Fig. 1 for repair index.

M. See Fig. 2 for resin mixes, adhesives and prepreg materials.

2. Repair Procedures Common to Various Repairs

A. Determine Damage

CAUTION: DO NOT USE CHEMICAL PAINT STRIPPERS TO REMOVE PAINT BEFORE MAKING DAMAGE EVALUATIONS. DAMAGE TO THE ADHESIVE RESIN SYSTEM WILL OCCUR.

(1) Examine visually for extent of damage.

(2) Check part in vicinity of damage for entry of water, oil, fuel, dirt or other foreign matter. Water can be detected by radiographic or thermographic methods. Remove contaminants. Refer to par. 2.B. for water removal instructions.

(3) Check for delamination around the damage.

NOTE: Delamination can be detected by instrumental nondestructive inspection(NDI) methods or by tap test. For the tap test, use a solid metal disk and tap the repair area lightly, but firmly. Void areas will give a dull sound. Solidly bonded areas will give a sharp ring. Refer to Part 1 of the Nondestructive Test Manual.

B. Remove Water from Damaged Area

(1) Remove water from honeycomb sandwich (Fig. 3).

(a) Remove damaged skin plies to open up honeycomb area in the damaged area. Remove standing water using vacuum or oil-free compressed air.

(b) Sand the core to remove the adhesive. Removal of adhesive fillets on core is not required.

(c) Apply screen over exposed core.

(d) Apply a thermocouple to the center of the screen.

(e) When opposite face is accessible, apply thermocouple to the opposite side of honeycomb sandwich panel.

(f) When opposite face is accessible, apply a heat blanket to opposite side of honeycomb sandwich panel.

NOTE: When opposite face is accessible, it is acceptable to heat the area using a heat blanket only on the opposite face An additional heat blanket may be used on the near face at the location shown in Fig. 3. The additional heat blanket accelerates water removal. When opposite face is inaccessible, use of heat blanket on the near side is required.

BOEING PROPRIETARY - Copyright © - Unpublished Work - See title page for details.

(g) When opposite face is inaccessible or when using an additional heat blanket, perform the following steps:

1) Apply a layer of glass fabric bleeder cloth over the screen and hold in place with masking tape.

2) Apply a thermocouple to the center of the bleeder cloth. Place a vacuum line on the edge of the bleeder cloth and hold in place with masking tape.

3) Place the heat blanket over the bleeder cloth.

(h) Place extruded sealing compound around the entire area and seal the area with vacuum bag material.

(i) Evacuate the layup to a minimum 22 inches of mercury vacuum.

(j) Heat the area for 1 hour minimum at 150°F (66°C) to 170°F (77°C). The rate of temperature rise must not exceed 5°F (3°C) per minute.

(k) Remove layup materials and proceed with repair procedure.

(2) Remove water from solid laminate.

(a) Remove damage and/or delaminated skin. Remove standing water using vacuum or oil-free compressed air.

(b) Heat the area for 1 hour minimum at 150°F (66°C) to 170°F (77°C). The rate of temperature rise must not exceed 5°F (3°C) per minute.

C. Remove and Prepare Damaged Area

(1) Damage removal.

(a) Trim out the damaged lamination to a smooth shape with rounded corners, or a circular or oval shape. Take care not to damage the undamaged plies, core, or surrounding material.

NOTE: Remove only damaged plies, damaged doublers, and damaged fillers.

(b) When the core is also damaged, remove the core by trimming to the same outline as the skin. The core area removed should extend at least 0.50 inch further than the visible core damage limits. Take care to avoid cutting into an undamaged skin on the opposite side. In cores greater than 1.0 inch thick, partially remove core (at least 0.5 inch deep) sufficient to clean up damage.

(c) In areas where contamination cannot be removed by cleaning or drying per par. 2.B., remove the contaminated structure along with the other damage.

(d) When opposite inner skin is also damaged, trim out the damage to a smooth shape as described in par. 2.C.(1)(a).

(e) When core is removed from the inner surface of opposite skin, carefully smooth core down to adhesive film.

(f) Inspect cut out area to ensure that all damage has been removed.

CAUTION: SANDING FOR ADHESION OR FINISH REMOVAL MUST NOT EXPOSE OR DAMAGE FILAMENTS IN THE UNTAPERED SURFACE REPAIR AREA.

SANDING MUST NOT EXPOSE OR DAMAGE FILAMENTS IN EACH PLY WHEN STEP SANDING OR IN THE PLY BONDED TO THE CORE (FIG. 4).

LOSS OF STRUCTURAL STRENGTH OF THE COMPONENT WILL OCCUR IF THESE CAUTIONS ARE NOT OBSERVED.

DO NOT USE PAINT STRIPPERS FOR THE REMOVAL OF FINISH. DAMAGE TO THE ADHESIVE RESIN SYSTEM WILL OCCUR.

(2) Preparation of damaged area (Fig. 4).

(a) Determine the number of plies that have been cut. Mask off the area around the cleaned up damage allowing 0.50-inch overlap for each ply replacement, plus 0.50 inch extra for each extra ply to ensure that the existing top ply is completely covered by the repair. If aluminum foil is present, allow an extra 1.00 inch overlap.

NOTE: Where the number of plies is not apparent, refer to the applicable structure identification or engineering drawing.

WARNING: SANDING GIVES OFF A FINE DUST THAT MAY CAUSE SKIN IRRITATIONS. BREATHING OF AN EXCESSIVE AMOUNT OF THIS DUST MAY BE INJURIOUS. OBSERVE PRECAUTIONS FOR SKIN AND RESPIRATION PROTECTION.

AIR-POWERED EQUIPMENT MUST BE USED WHERE THE POSSIBILITY OF VAPOR IGNITION EXISTS. NONCOMPLIANCE COULD CAUSE PERSONNEL INJURY.

(b) Internal surface of part (nonaerodynamic surface) and noncritical aerodynamic surfaces.

1) Remove the paint finish or tedlar film in the masked off area using No. 240 or finer Scotch-Brite abrasive, or No. 150 or finer sandpaper.

2) If the damaged area has a layer of aluminum foil, cut back the foil enough to allow a new foil layer to have a 1.0 inch minimum overlap beyond the outermost repair ply (Fig. 18).

3) Taper sand or step sand each ply around the cleaned up damage using No. 80 sandpaper. Taper or step sand each ply a minimum of 0.5 inch per ply (Fig. 4).

4) An optional procedure for two or three ply laminate face sheets is to fill the cleaned up damage area flush with the original surface using filler plies during the repair layup. The repair plies are then installed directly on the resulting smooth surface of the repair area.

5) Abrade surfaces around repair using No. 240 or finer, Scotch-Brite abrasive.

(c) External surface of part (critical aerodynamic surfaces).

1) Taper sand a uniform taper around the cleaned up damage using No. 80 sandpaper. The taper is to be over a minimum distance of 0.5 inch for each existing ply of the laminate. As an option on sandwich structure, step sanding per par. 2.C.(2)(b)2) may be used instead of taper sanding. Refer to 51-70 for locations of areas of critical aerodynamic smoothness. Taper sanding must always be used on solid laminate structures (Fig. 4).

NOTE: For sanding, use a flexible disk sander, a belt sander, a rotating pad sander, or sand by hand.

2) Remove exterior finishes, including enamel finish and conductive coating, from the surfaces around repair using No. 150 or finer sandpaper.

(d) Edgeband of panel.

1) Taper sand panel edgeband according to par. 2.C.(2)(c).

NOTE: Edgeband is the solid laminate around the outer periphery of the honeycomb panel.

(e) Cleaning of repair area.

1) Remove all sanding dust using oil-free compressed air.

WARNING: KEEP SOLVENTS AWAY FROM SOURCES OF HEAT, FIRE, OR SPARKS. HEAT, FIRE, OR SPARKS CAN CAUSE AN EXPLOSION.

AVOID CONTACT OF SOLVENT WITH SKIN, EYES, AND CLOTHING. WEAR EYE PROTECTION AND USE MECHANICAL VENTILATION OR RESPIRATORY PROTECTION WHEN WORKING IN A CONFINED SPACE OR AREA. BREATHING VAPORS OR ALLOWING SOLVENT TO CONTACT SKIN OR EYES IS HAZARDOUS.

CAUTION: DO NOT IMMERSE PARTS IN TRICHLOROETHANE SOLVENT OR ALLOW STANDING SOLVENT ON PART. DAMAGE TO PART WILL OCCUR.

2) Wipe surfaces with a clean cloth moistened with MIBK (methyl isobutyl ketone), MEK (methyl ethyl ketone) or acetone. Allow solvent to evaporate before proceeding with the repair.

D. Fabricate, Clean and Install Honeycomb Replacement Core Plug

(1) Fabricate core plug.

(a) Fabricate core plug. Refer to specific component structural identification subject to determine type of core called out on engineering drawing.

(b) For butt splicing, the honeycomb core plug should fit flush with original core and with ribbon direction the same as in original core. The replacement core must overlap and make intimate contact with the cell walls of surrounding core material.

(c) Trim core plug to full or partial depth of original core (par. 2.C.(1)(b)).

NOTE: When applicable, depth of core plug should allow for shrinkage during cure and for thickness of extra plies of fabric cloth and adhesive film between core plug and undamaged core or skin.

(2) Clean core plug.

WARNING: KEEP SOLVENTS AWAY FROM SOURCES OF HEAT, FIRE, OR SPARKS. HEAT, FIRE, OR SPARKS CAN CAUSE AN EXPLOSION.

AVOID CONTACT OF SOLVENT WITH SKIN, EYES, AND CLOTHING. WEAR EYE PROTECTION AND USE MECHANICAL VENTILATION OR RESPIRATORY PROTECTION WHEN WORKING IN A CONFINED SPACE OR AREA. BREATHING VAPORS OR ALLOWING SOLVENT TO CONTACT SKIN OR EYES IS HAZARDOUS.

CAUTION: DO NOT EXCEED IMMERSION CRITERIA GIVEN IN PAR. 2.D.(2)(a). DAMAGE TO CORE MATERIAL WILL OCCUR.

DO NOT IMMERSE PARTS IN TRICHLOROETHANE SOLVENT OR ALLOW STANDING SOLVENT ON PART. DAMAGE TO PART WILL OCCUR.

(a) Clean visually contaminated core by dipping (a maximum of four times) in MIBK, MEK or acetone bath for 60 seconds.

(b) Locally contaminated areas can be washed with MIBK, MEK or acetone.

(c) The core must be completely dry, clean and free of evidence of solvents before installation.

CAUTION: DO NOT TOUCH THE ADHESIVE FILM, FOAMING ADHESIVE, OR PREIMPREGNATED MATERIALS WITH BARE HANDS OR OTHER PARTS OF THE BODY. WEAR CLEAN WHITE GLOVES WHEN HANDLING THESE MATERIALS. THESE MATERIALS MUST REMAIN FREE OF CONTAMINATION DURING CUTTING AND HANDLING.

DO NOT FOLD, STRETCH, OR OTHERWISE THIN THE ADHESIVE FILM. NONCOMPLIANCE WILL AFFECT THE QUALITY OF THE ADHESIVE.

ENSURE THAT THE SEPARATOR FILMS ARE REMOVED FROM THE ADHESIVE FILM, FOAMING ADHESIVE, AND PREIMPREGNATED MATERIALS PRIOR TO LAYUP AND CURING. NONCOMPLIANCE WILL RESULT IN A RUINED REPAIR.

(3) Install core plug.

NOTE: Before opening the adhesive film, foaming adhesive, or preimpregnated material wrappers, condition them to room temperature until moisture no longer condenses on the wrapper.

During use, suspend the rolls of adhesive or preimpregnated material horizontally through their axes free from other rolls or objects.

The following procedure is based on the core plug installation being cured separately from the repair plies. As an option, the core plug installation and the repair plies may be cured at the same time if the far side skin is accessible to place thermocouples and a heat blanket on it.

(a) For partial core replacement, perform the following steps:

1) Cut two plies of BMS 5-101, Type II, Grade 10 adhesive film to fit the core cavity.

NOTE: See Fig. 6, Table III for adhesive film substitute materials.

2) Cut one piece of BMS 8-79, Style 120 glass fabric to fit the core cavity.

3) Remove the separator film from one ply of adhesive film and place the adhesive film into the core cavity.

4) Remove the separator film from the glass fabric and place the glass fabric into the core cavity.

5) Remove the separator film from the second ply of adhesive film and place the adhesive film into the core cavity.

(b) For full depth core replacement where damage does not extend through both skins, perform the following steps:

1) Cut one ply of BMS 5-101, Type II, Grade 10 adhesive film to fit the core cavity.

NOTE: See Fig. 6, Table III for adhesive film substitute materials.

2) Remove the separator film from the adhesive film and place the adhesive film into the core cavity.

2. D. (3) (c) If both skins are damaged, apply a caul plate against the exterior surface of the far side skin and tape in place.

(d) If the replacement core plug is being cured separately from the repair plies, place thermocouples at all adhesive bond lines.

(e) Cut a piece of BMS 5-90, Type 2H, Class 250, Grade 50 foaming adhesive to wrap around the replacement core plug.

(f) Remove the separator film from the foaming adhesive, wrap the adhesive around the replacement core plug, and install into the core cavity. Orient the ribbon direction to align with the original core ribbon.

(g) Put the layup materials and equipment in place per Fig. 5. If damage extends through both skins, put layup materials and equipment on both sides of part using the layup shown in Fig. 5.

(h) Evacuate the repair area to a vacuum of 22 inches of mercury minimum.

NOTE: Maintain a vacuum of 22 inches of mercury minimum during the entire cure cycle.

(i) Check the vacuum bag for leaks.

(j) Cure per Fig. 8. Determination of the temperature must be made using the thermocouples placed at the adhesive bond line. Determine cure temperature from the thermocouple with the lowest reading.

(k) Allow the repair area to cool under vacuum until the temperature of the repair area is 125°F (52°C) or less. Then remove layup materials and equipment.

(l) Sand replacement core plug approximately flush with surrounding material, making allowance for adhesive film and slight core crush during cure of repair plies.

(m) Remove all sanding dust using oil-free compressed air.

CAUTION: DO NOT TOUCH THE ADHESIVE FILM OR PREIMPREGNATED MATERIALS WITH BARE HANDS OR OTHER PARTS OF THE BODY. WEAR CLEAN WHITE GLOVES WHEN HANDLING THESE MATERIALS. THESE MATERIALS MUST REMAIN FREE OF CONTAMINATION DURING CUTTING AND HANDING.

DO NOT FOLD, STRETCH OR OTHERWISE THIN THE ADHESIVE FILM. NONCOMPLIANCE WILL AFFECT THE QUALITY OF THE ADHESIVE.

USE OF PRECURED PATCHES IS NOT RECOMMENDED. PRECURED PATCHES BONDED TO THE STRUCTURE UNDER VACUUM PRESSURE ONLY AND LARGE PRECURED PATCHES BONDED TO CONTOURED SURFACES CAN RESULT IN POROUS OR NONCONTINUOUS BONDLINES.

E. Prepare and Apply Repair Plies

NOTE: Before opening the adhesive film or preimpregnated material wrappers, condition them to room temperature until moisture no longer condenses on the wrapper.

During use, suspend the rolls of adhesive or preimpregnated material horizontally through their axes free from other rolls or objects.

(1) Prepare repair plies.

(a) Refer to the specific component structure identification to determine the number, orientation, and material of plies used in the original structure.

(b) See Fig. 6 for repair ply material and substitution of repair ply material. No substitutes are permitted for graphite fabric repair plies.

(c) Refer to the specific component structure repair subject for extra repair ply requirements.

(d) See Fig. 7 for extra repair ply material.

(e) See Fig. 4 for overlap requirements.

(f) From each type of material required, cut the required number of plies for the repair patch. In the patch, use one repair ply of fabric for each damaged ply of fabric in the original laminate, use the number of graphite fabric repair plies required per Fig. 6 for each damaged ply of graphite tape in the original laminate, plus extra repair plies as specified in the specific component structural repair subject. If extra repair plies are not specified in the specific component structural repair subject, one extra repair ply is required per Fig. 7. Each repair ply must have the same orientation as the corresponding original ply being replaced. When repairing graphite tape with graphite fabric, see Fig. 6 for repair ply orientation. The orientation of the outermost extra repair ply is to be ± 45 degrees with respect to the ply orientation convention given in the specific component structural identification. The orientation of the inner extra repair ply (if required) is to be 0 to 90 degrees with respect to the ply orientation convention given in the specific component structural identification. If a filler ply is required, use the same material as adjacent repair ply and orientation is optional.

CAUTION: ENSURE THAT THE SEPARATOR FILMS ARE REMOVED FROM THE ADHESIVE FILM AND PREIMPREGNATED MATERIALS PRIOR TO LAYUP AND CURING. NONCOMPLIANCE WILL RESULT IN A RUINED REPAIR.

(2) Apply repair plies.

NOTE: Where the damage has occurred at a lap joint in the original laminates, it is not necessary to make a comparable lap in the repair plies. Where the original core was undamaged and was provided with a recess to match the lap joint, the recess should be filled with filler plies before application of the repair plies.

(a) Cut two plies of BMS 5-101, Type II, Grade 10 adhesive film 1/8-inch larger than the outermost extra repair ply.

NOTE: See Fig. 6, Table 1II for adhesive film substitute materials.

(b) Remove the separator film from one ply of adhesive film and place the adhesive film over the repair area.

(c) Starting with the smallest repair ply, remove the separator film from each repair ply and place the repair ply against the repair area with the proper orientation and with overlap all around per Fig. 4.

(d) Remove the separator film from the second ply of adhesive film and place the adhesive film over the repair plies.

(e) If the repair area has a layer of aluminum foil (BMS 8-289), repair the aluminum foil per par. 3.M.

F. Layup/Bagging Procedure (Fig. 5)

(1) Place a layer of perforated FEP parting film (1 mil thick) over the repair. Cut the FEP so that the edges extend 3 inches beyond the edge of the repair patch.

(2) Secure three thermocouples (spaced evenly around repair) to the panel at the edge of the repair and secure them to the appropriate recorders.

(3) Place a layer of dry peel ply or Style 120 glass fabric (or equivalent thickness glass fabric) over the perforated FEP as a surface bleeder. Cut the surface bleeder so that the edges extend 2 inches beyond the edge of the perforated FEP.

(4) Place a layer of solid FEP parting film (2 mil thick) over the surface bleeder. Cut the solid FEP so that the edges are even with the edge of the perforated FEP.

(5) Place a layer of Airweave SS or Style 120 glass fabric over the solid FEP as a surface breather. Cut the surface breather so that the edges extend to the edge of the surface bleeder. Make certain the surface breather makes contact with the surface bleeder along the edges.

(6) Secure a vacuum line on the edge of the surface breather.

WARNING: USE HEAT CURING EQUIPMENT THAT IS ACCEPTABLE TO LOCAL FIRE PROTECTION AUTHORITIES. FAILURE TO COMPLY COULD CAUSE PERSONNEL INJURY.

(7) Place a heat blanket over the surface breather. The heat blanket must extend a minimum of 2 inches beyond the repair patch edges.

NOTE: When using a heat blanket larger than 12 inches on one side, an aluminum caul plate (0.016 inch thick) can be used under the heat blanket to minimize localized heating. Make the caul plate slightly smaller than the surface breather.

If the repair is made on a structure too small to allow the heat blanket to be vacuum bagged, proceed to step (10) and place heat blanket over the vacuum bag.

2. F. (8) Place controlling thermocouple over the center of the heat blanket.

(9) Place 4 to 6 layers of glass fabric over the heat blanket. The glass fabric will insulate the heat blanket and prevent damage to the bagging film.

(10) Apply extruded sealing compound around the entire repair area, approximately 6 inches outside the edge of the heat blanket.

(11) Lay a piece of vacuum bag material over the entire repair area, sealing the edge with the extruded sealing compound. Pleat the vacuum bag where needed to prevent bridging of bag material and subsequent bag breakage. Pad all sharp objects and corners to prevent bag breakage. It is optional to vacuum bag the entire part.

NOTE: The entire part must be vacuum bagged and restrained in place to prevent delamination and distortion when the repair area exceeds 15% of panel area. Regardless of the method of heat application, restraining devices that maintain the contour and support the part must be used for large parts where sagging and distortion could occur due to the weight of the part.

(12) Evacuate the space under the vacuum bag and maintain a vacuum of 22 inches of mercury minimum.

NOTE: Maintain a vacuum of 22 inches of mercury minimum during entire cure cycle.

(13) Check the vacuum bag for leak paths.

(14) If the replacement core plug is being cured at the same time as the repair plies, place thermocouples on the far side skin or caul plate opposite the repair area. Place a heat blanket and vacuum line on the far side skin and repeat steps (8) through (13) above.

WARNING: USE HEAT CURING EQUIPMENT THAT IS ACCEPTABLE TO LOCAL FIRE PROTECTION AUTHORITIES. NONCOMPLIANCE COULD CAUSE PERSONNEL INJURY.

CAUTION: SURFACE TEMPERATURE MUST NOT EXCEED 270°F (132°C). DAMAGE OR DISTORTION OF STRUCTURE MAY OCCUR IF TEMPERATURE EXCEEDS 270°F (132°C).

G. Cure the Repair (Fig. 8)

NOTE: When using a hot bond console, consult the manufacturer's operating instructions.

Maintain a vacuum of 22 inches of mercury minimum during the entire cure cycle.

Determination of the temperature must be made using the thermocouples placed at the edge of the repair patch and, if applicable, on the far side skin. Use the thermocouple with the lowest reading to determine the cure temperature.

(1) Raise the temperature at a rate of 2 to 8°F (1 to 5°C) per minute to a temperature of 250 to 270°F (121 to 133°C).

(2) Cure at 250 to 270°F (121 to 133°C) for 90 to 150 minutes.

NOTE: Cure time does not include the time required for the mold and part to heat up to temperature. Cure time is the period after the part has reached that temperature.

(3) Cool down at a rate of 5°F (3°C) per minute maximum.

(4) When the repair area has cooled to less that 125°F (52°C) release the vacuum pressure and remove the layup and bagging materials.

H. Refinish after Repair

CAUTION: DO NOT SAND INTO ORIGINAL STRUCTURE. FAILURE TO COMPLY WILL REDUCE THE STRENGTH OF THE COMPONENT.

(1) Lightly sand edge of topmost repair ply as necessary to fair the edge. Sand surface of repair to produce a smooth finish without damaging fibers. Omit this step if the topmost ply is aluminum foil (BMS 8-289).

(2) Apply finish to the repaired surface using the following applicable methods.

(a) Where clear Tedlar film surfaces have been removed, seal with a brush coat of Resin Mix 1 (Fig. 2). Cure per Fig. 2.

(b) Where grey or white Tedlar film surfaces have been removed, seal with Resin Mix 1 (Fig. 2). Cure per Fig. 2 and apply one coat of BMS 10-11 primer and one coat of BMS 10-60 enamel (grey, BAC705; white, BAC7106).

(c) Where conductive surfaces have been removed, apply conductive finish according to Chapter 51 of the Maintenance Manual.

(d) Where the abrasion resistant teflon finish has been removed from the internal surface of the panel edgeband, reapply the finish according to Chapter 51 of the Maintenance Manual.

(e) Where the original painted surfaces have been removed, restore original finish according to Chapter 51 of the Maintenance Manual.

(f) Where sealant has been removed from around fittings or fay surfaces to facilitate repairs, reapply BMS 5-26 in fuel tank areas or BMS 5-95 in all other areas per drawing requirements or 51-10-2.

(g) Where aluminum flame sprayed areas have been damaged, repair per 51-40-9.

(h) Where aluminum coated glass fabric (BMS 8-278) has been repaired, aluminum flame spray per 51-40-9.

(i) Where repairs have been made to the exterior surfaces of panels containing aramid, apply sealant to the exterior surfaces per 51-20-04.

I. Perform Post Repair Requirements

(1) Make an inspection of the repair that was done to make sure that the repair is satisfactory. The inspection must include these areas:

- The area that was hot.
- A minimum width of 2 inches all around the area that was hot.

NOTE: Post repair inspection is recommended. Examples of inspection procedures are given in NDT Manual Part 1, 51-10-01. Other inspection methods that have been examined and found satisfactory by the airlines can be used.

WARNING: FLIGHT SAFETY DEMANDS THAT CERTAIN CONTROL SURFACES BE PROPERLY BALANCED AT ALL TIMES.

(2) Following repair of control surface, balance must be checked to determine whether or not rebalancing is required. Rebalance as necessary per 51-80-00.

CAUTION: REPAIRS MADE TO CONTROL SURFACES AND/OR ADJACENT STRUCTURE MUST NOT INTERFERE WITH THE DESIGNED OPERATION OF THE CONTROL SURFACES. DAMAGE TO AIRPLANE STRUCTURE MAY OCCUR.

(3) Check all repairs for noninterference with operation of control surfaces. Ensure adequate clearances for all repaired parts.

CAUTION: REPAIRS MUST NOT COVER EXISTING DRAIN HOLES IN PANELS. WATER WILL ACCUMULATE IF DRAIN HOLES ARE COVERED.

(4) If the repair covers a drain hole, drill through the repair at existing location.

NOTE: Drain holes are usually 0.375-inch diameter (Ref Chapter 51, Maintenance Manual).

CAUTION: TO GET AN ACCEPTABLE QUALITY REPAIR, DO AS FOLLOWS:

- REFER TO THE APPLICABLE COMPONENT WHICH YOU ARE GOING TO REPAIR FOR THE REPAIR LIMITS AND MATERIAL OF THE COMPONENT BEFORE YOU USE THESE REPAIR INSTRUCTIONS.
- USE THE CORRECT MATERIALS FOR THE TYPE OF COMPONENT AND REPAIR THAT IS MADE.
- USE THE MATERIALS THAT AGREE WITH THE SPECIFICATIONS IN THE SRM.
- ACCURATELY FOLLOW THE SRM PROCEDURES AT EACH STEP OF THE REPAIR. IF YOU DO NOT DO THIS, IT CAN CAUSE A REPAIR THAT IS NOT SATISFACTORY AND NOT APPROVED.

3. Typical Repairs

NOTE: These repairs apply to all graphite, aramid, and graphite/aramid/glass hybrid reinforced laminates and nonmetallic honeycomb sandwich components except radomes and floor panels.

See Fig. 1 for repair index.

A. Repair 1 - Repair of Damage to One Skin of Honeycomb Panel (Fig. 10)

(1) Determine damage per par. 2.A. Ensure that water and other contaminations are removed per par. 2.B.

(2) Cut away damaged plies per par. 2.C.(1). Do not remove any core.

(3) Prepare damaged area per par. 2.C.(2).

(4) Prepare and apply repair plies per par. 2.E.

(5) Apply vacuum and cure per par. 2.F. and 2.G.

(6) Refinish the repair area per par. 2.H.

(7) Perform applicable post-repair requirements per par. 2.I. before returning the repaired component to flight service.

B. Repair 2 - Repair of Damage, 0.50-inch Diameter or Less, to One Skin and Honeycomb Core.

(1) Repair this type of damage per Repair 2 of 51-40-12.

C. Repair 3 - Repair of Damage, Greater than 0.50-inch Diameter, to One Skin and Honeycomb Core (Fig. 11).

(1) Determine extent of damage according to par. 2.A.

(2) Remove all contamination and water from damaged area per par. 2.B. Area must be completely dried out.

(3) Remove damage and prepare area according to par. 2.C.

(4) Fabricate, clean, and install honeycomb replacement core plug per par. 2.D.

(5) Clean surface according to par. 2.C.(2)(e).

(6) Prepare and apply repair plies according to par. 2.E.

(7) Bag repair and cure according to par. 2.F. and 2.G.

(8) Refinish the repair according to par. 2.H.

(9) Perform applicable post-repair requirements per par. 2.I. before returning the repaired component to flight service.

D. Repair 4 - Repair of Damage to Both Skins and Honeycomb Core (Fig. 12)

(1) Determine extent of damage according to par. 2.A.

(2) Remove all contamination and water from damaged area per par. 2.B. Area must be completely dried out.

(3) Remove damage and prepare area according to par. 2.C.

(4) Fabricate, clean, and install honeycomb replacement core plug per par. 2.D., except it is not necessary to vacuum bag the core plug installation at this time.

(5) Prepare and apply repair plies to one surface of the panel according to par. 2.E. A caul plate may be used on the opposite face of the panel to restrain the core plug in place.

(6) Bag repair and cure according to par. 2.F. and 2.G. Ensure that temperature is approximately equal on both sides of panel.

(7) Sand core plug approximately flush with surrounding material, making allowance for slight core crush during cure.

(8) Clean surface according to par. 2.C.(2)(e).

(9) Prepare and apply repair plies to the other surface of the panel according to par. 2.E.

(10) Bag repair and cure according to par. 2.F. and 2.G.

(11) Refinish the repair according to par. 2.H.

(12) Perform applicable post-repair requirements per par. 2.I. before returning the repaired component to flight service.

NOTE: The above two-stage cure procedure is recommended. As an option, a three-stage cure procedure may be used wherein the core plug installation and the repair plies on each side may be cured separately.

E. Repair 5 - Repair of Damage to Honeycomb Panel Where Access is Limited to One Side (Fig. 13)

NOTE: This repair applies to flat panels (or nearly flat panels) where damage extends completely through a panel, but access is not readily available to repair the unexposed side.

(1) Determine extent of damage according to par. 2.A.

(2) Remove all contamination and water from damaged area per par. 2.B. Area must be completely dried out.

(3) Remove damage and prepare area according to par. 2.C. and the following:

(a) Enlarge the hole in the outer skin and core (D diameter) to permit a repair to be made to the inner skin with the required overlap.

NOTE: D diameter = D + N + 1
d = major diameter of the oval hole in the inner skin
N = number of plies in the inner skin.

Stepping of the plies in the inner skin is not allowed for this repair.

(b) Cut the damaged area in the inner skin to an oval shaped hole.

NOTE: The major diameter of the oval hole must be large enough for the minor diameter of the oval patch to fit through. The minor diameter of the oval hole must be large enough to maneuver the patch and spring steel assembly through.

(4) Fabricate an airtight patch to cover the oval hole in the inner skin from the inaccessible side.

(a) Make a suitable mold on which to lay up the patch. A thin gauge aluminum sheet on any smooth surface can be used as a mold.

(b) Cover the mold with parting film or a release agent.

(c) Cut five plies of 250°F cure prepreg material. The type of material and orientation is optional. The diameter of the plies is to be at least equal to the D diameter.

CAUTION: ENSURE THAT THE SEPARATOR FILMS ARE REMOVED FROM THE PREIMPREGNATED MATERIALS PRIOR TO LAYUP AND CURING. NON COMPLIANCE WILL RESULT IN A RUINED REPAIR.

(d) Remove the separator films and lay up the five plies of prepreg material on the mold.

(e) Bag and cure the patch according to par. 2.F. and 2.G.

(f) Remove the patch from the mold.

(g) Trim the patch to an oval shape that will overlap the oval hole in the inner skin by 0.25 inch minimum.

(h) Drill a 1/8-inch diameter hole in the center of the patch.

(i) Abrade the surface of the patch that will bond to the inner skin using No. 240 or finer Scotch-Brite abrasive.

(j) Remove all sanding dust using oil-free compressed air.

(k) Fabricate a strip of spring steel 1.0 x 10.0 inches and drill a 1/8-inch diameter hole in the center.

(l) Assemble the patch and spring steel using a 1/8-inch diameter cleco fastener.

(5) Remove Tedlar, if required, and abrade the underside of the inner skin to a distance of 0.38 inch from the edge of the oval hole using No. 180 or finer sandpaper. Do not damage the existing ply filaments.

(6) Clean the surface according to par. 2.C.(2)(e).

(7) Bend up both ends of the spring steel and apply BMS 5-25, Type II, Grade 1 adhesive or BMS 5-92, Type I adhesive to the patch.

(8) Hold the spring steel up, insert the patch into the oval hole, and orientate the patch so that the hole is covered. Release the spring steel so that it holds the patch tightly up against the inner skin.

(9) Cure the adhesive per Fig. 2.

(10) Remove the cleco fastener and spring steel. Fill the hole in the patch with BMS 5-25, Type II, Grade 1 adhesive, BMS 5-92, Type I adhesive, or BMS 5-95, Class B-1/2 sealant and allow to cure.

NOTE: Cure BMS 5-25 and BMS 5-92 per Fig. 2. Cure BMS 5-95 for 20 hours at 77°F ±2° (25°C ±1°).

(11) Clean the repair area according to par. 2.C.(2)(e).

(12) Prepare the repair plies for the inner skin per par. 2.E.(1). All plies are to have a diameter of D.

(13) Cut two plies of BMS 5-101, Type II, Grade 10 adhesive film 0.10 inch larger than diameter D.

NOTE: See Fig. 6, Table III for adhesive film substitute materials.

CAUTION: ENSURE THAT THE SEPARATOR FILMS ARE REMOVED FROM THE ADHESIVE FILM AND PREIMPREGNATED MATERIALS PRIOR TO LAYUP AND CURING. NONCOMPLIANCE WILL RESULT IN A RUINED REPAIR.

(14) Apply the adhesive film and repair plies as follows:

(a) Remove the separator film from one ply of adhesive film and place the adhesive film on the surface of the inner skin that will fay with the inner skin repair plies.

(b) Remove the separator films from each repair ply and place the repair plies against the repair area with the proper orientation.

(c) Remove the separator film from the second ply of adhesive film and place the adhesive film over the repair plies.

(15) Fabricate and clean the replacement core plug per par. 2.D.(1) and 2.D.(2).

(16) Install the replacement core plug per par. 2.D.(3)(d) thru 2.D.(3)(m).

(17) Prepare and apply the repair plies to the outer skin according to par. 2.E.

(18) Bag repair and cure according to par. 2.F. and 2.G.

(19) Refinish the panel outer surface according to par. 2.H.

(20) Perform applicable post-repair requirements per par. 2.I. before returning the repaired component to flight service.

F. Repair 6 - Repair of Delamination Between Plies of Panel Edgeband

(1) Repair this type of damage per Repair 6 of 51-40-12.

G. Repair 7 - Repair of Damage to Plies on Edge of Honeycomb Panel (Fig. 14)

(1) Determine extent of damage according to par. 2.A.

(2) Remove all contamination and water from damaged area per par. 2.B. Area must be completely dried out.

CAUTION: DO NOT SAND INTO BOND PLY OR CORE (FIG. 15). LOSS OF STRUCTURAL STRENGTH OF THE COMPONENT WILL OCCUR IF THIS CAUTION IS NOT OBSERVED. BOND PLY IS PLY ADJACENT TO CORE.

(3) Remove damage and prepare area according to par. 2.C.

CAUTION: ON HYBRID PANELS, ENSURE THAT GRAPHITE REPAIR PLIES DO NOT EXTEND INTO AREAS OF FASTENER HOLES. ELECTROLYSIS BETWEEN THE METAL FASTENERS, SUPPORT STRUCTURE, AND GRAPHITE MAY CAUSE CORROSION IN THE ALUMINUM STRUCTURE.

(4) Prepare and apply repair plies according to par. 2.E.

(5) Bag repair and cure according to par. 2.F. and 2.G.

3. G. (6) Refinish the repair according to par. 2.H.

(7) Perform applicable post-repair requirements per par. 2.I. before returning the repaired component to flight service.

H. Repair 8 - Repair of damage to Honeycomb Core on Edge of Honeycomb Panel (Fig. 15)

(1) Determine extent of damage according to par. 2.A.

(2) Remove all contamination and water from damaged area per par. 2.B. Area must be completely dried out.

(3) Remove damage and prepare area according to par. 2.C.

(4) Fabricate, clean, and install honeycomb replacement core plug per par. 2.D.

(5) Clean surfaces according to par. 2.C.(2)(e).

CAUTION: ON HYBRID PANELS, ENSURE THAT GRAPHITE REPAIR PLIES DO NOT EXTEND INTO AREAS OF FASTENER HOLES. ELECTROLYSIS BETWEEN METAL FASTENERS, SUPPORT STRUCTURE, AND GRAPHITE MAY OCCUR CAUSING CORROSION TO ALUMINUM STRUCTURE.

(6) Prepare and apply repair plies according to par. 2.E.

(7) Bag repair and cure according to par. 2.F. and 2.G.

(8) Refinish the repair according to par. 2.H.

(9) Perform applicable post-repair requirements per par. 2.I. before returning the repaired component to flight service.

I. Repair 9 - Repair of Damaged Panel Attach Hole in Honeycomb Panel Edgebands or Along Edges of Solid Laminate Panels (Fig. 16)

(1) Determine the extent of damage according to par. 2.A.

(2) Remove all contamination and water from damaged area per par. 2.B. Area must be completely dried out. Any structure in the repair area that cannot be dried out must be removed along with the other damage.

(3) Taper sand around the hole to remove damage according to Fig. 16.

(4) Clean area according to par. 2.C.(2)(e).

CAUTION: ON HYBRID PANELS, ENSURE THAT GRAPHITE REPAIR PLIES DO NOT EXTEND INTO AREAS OF FASTENER HOLES. ELECTROLYSIS BETWEEN METAL FASTENERS, SUPPORT STRUCTURE, AND GRAPHITE MAY OCCUR CAUSING CORROSION TO ALUMINUM STRUCTURE.

3. I. (5) Prepare and apply repair plies according to par. 2.E. and Fig. 16.

(6) Bag repair and cure according to par. 2.F. and 2.G.

(7) Refinish the repair according to par. 2.H.

(8) Drill and countersink fastener holes. Refer to 51-20-7 for hole drilling and machining of composite structure.

(9) Perform applicable post-repair requirements per par. 2.I. before returning the repaired component to flight service.

J. Repair 10 - Repair of Damage, 0.50-inch Diameter or Less, to Solid Laminates

(1) Repair this type of damage per repair 10 of 51-40-12 or Repair 10 of 51-40-15

K. Repair 11 - Repair of Damage, Greater than 0.50-Inch Diameter, to Solid Laminates (Fig. 19)

NOTE: This repair applies to components made from laminated graphite, aramid, or graphite/aramid/glass hybrid plies and epoxy resin without a honeycomb core.

(1) Determine extent of damage according to par. 2.A.

(2) Remove all contamination and water from damaged area per par. 2.B. Area must be completely dried out.

(3) Remove damage and prepare area according to par. 2.C.

(4) Clean surface according to par. 2.C.(2)(e).

(5) Prepare and apply repair plies according to par. 2.E.

(6) Bag repair and cure according to par. 2.E. and 2.G.

(7) Refinish the repair according to par. 2.H.

(8) Perform applicable post-repair requirements per par. 2.I. before returning the repaired component to flight service.

L. Repair 12 - Repair of Dents

(1) Determine extent of damage according to par. 2.A. If fiber damage or delamination is found, refer to specific component structural repair subject.

(2) If no fiber damage or delamination is found, repair this type of damage per Repair 12 of 51-40-12.

M. Repair 13- Repair of BMS 8-289 Aluminum Foil (Fig. 18)

NOTE: This repair is done in addition to the applicable repair of the underlying plies.

(1) Perform the applicable repair to the underlying plies per par. 3.A., 3.C. thru 3.E., 3.G. thru 3.I., or 3.K. up to and including the step for applying the repair plies to the surface that has aluminum foil (BMS 8-289).

(2) Butt-splice a ply of BMS 8-289, Type O, Class 250, Grade 1 or 2 over the repair area with a 0.25 inch maximum gap and no overlap allowance.

(3) Place a splice strip of etch-treated aluminum foil or BMS 8-289, Type O, Class 250, Grade 1 or 2 (placed adhesive side up) over the aluminum surface so that it has a 1 inch overlap on each side of the splice line. The outer edge of the splice strip is to be at least 1 inch from the edge of the part.

(4) Place a cover ply of BMS 5-101 Type II, Grade 10 adhesive film or BMS 8-289, Type O, Class 250, Grade 1 or 2 (placed adhesive side down) over the repair so that it overlaps the splice strip by 1 inch on all sides.

NOTE: See Fig. 6, Table III for adhesive film substitute materials.

(5) Complete the repair starting with the step following the last step performed in par. 3.M.(1).

REPAIR NO.	REPAIR TITLE	PARAGRAPH	FIGURE NO.
1	REPAIR OF DAMAGE TO ONE SKIN OF HONEYCOMB PANEL	3.A.	10
2	REPAIR OF DAMAGE, 0.50-INCH DIAMETER OR LESS, TO ONE SKIN AND HONEYCOMB CORE	3.B.	—
3	REPAIR OF DAMAGE, GREATER THAN 0.50-INCH DIAMETER, TO ONE SKIN AND HONEYCOMB CORE	3.C.	11
4	REPAIR OF DAMAGE TO BOTH SKINS AND HONEYCOMB CORE	3.D.	12
5	REPAIR OF DAMAGE TO HONEYCOMB PANEL WHERE ACCESS IS LIMITED TO ONE SIDE	3.E.	13
6	REPAIR OF DELAMINATION BETWEEN PLIES OF PANEL EDGEBAND	3.F.	—
7	REPAIR OF DAMAGE TO PLIES ON EDGE OF HONEYCOMB PANEL	3.G.	14
8	REPAIR OF DAMAGE TO HONEYCOMB CORE ON EDGE OF HONEYCOMB PANEL	3.H.	15
9	REPAIR OF DAMAGED PANEL ATTACH HOLE IN HONEYCOMB EDGEBANDS OR ALONG EDGES OF SOLID LAMINATE PANELS	3.I.	16
10	REPAIR OF DAMAGE, 0.50-INCH DIAMETER OR LESS, TO SOLID LAMINATES	3.J.	—
11	REPAIR OF DAMAGE, GREATER THAN 0.50-INCH DIAMETER, TO SOLID LAMINATES	3.K.	17
12	REPAIR OF DENTS	3.L.	—
13	REPAIR OF BMS 8-289 ALUMINUM FOIL	3.M.	18

Repair Index
Figure 1

141830

RESIN, PREPREG, OR ADHESIVE TYPE	COMPONENTS	PARTS BY WEIGHT	OPEN TIME BEFORE USE, OR POT LIFE OF MIXTURE	CURING TIME
RESIN MIX 1 (SEALER RESIN) (BMS 8-207, TYPE 1, CLASS I)	EC1838A RESIN EC1838B HARDENER	50 50	20 MINUTES AT 75° TO 79°F (24° TO 26°C)	2 HRS AT 105° (41°C) TO 125°F (52°C)
RESIN MIX 1 (SEALER RESIN) ALTERNATE (BMS 8-207 TYPE 1, CLASS II)	FR-40 RESIN FR-5413C HARDENER	99 TO 101 14.5 TO 15.5	20 MINUTES AT 75° TO 79°F (24° TO 26°C)	12 HRS MIN AT ROOM TEMP (65°F MIN) (19°C MIN) 1 HR MIN AT 150°F (66°C) TO 170°F (77°C)
RESIN MIX 1 (SEALER RESIN) ALTERNATE	EPOCAST 156A RESIN EPOCAST 941 HARDENER	98 TO 102 9.5 TO 10.5	45 TO 60 MINUTES AT 70°F (21°C)	SEE FIG. 9
RESIN MIX 1 (SEALER RESIN) ALTERNATE	EPOCAST 156A RESIN EPOCAST 156B HARDENER	98 TO 102 5.7 TO 6.3	15 TO 25 MINUTES AT 77°F (25°C)	12 HRS AT 70°F (21°C) OR 1 TO 3 HRS AT 150°F (66°C)
RESIN MIX 1 (SEALER RESIN) ALTERNATE	FR-5318S RESIN FR-5318C HARDENER	98 TO 102 49 TO 51	45 TO 60 MINUTES AT 70°F (21°C)	SEE FIG. 9
RESIN MIX 1 EPOX-O WELD (SEALER RESIN) ALTERNATE	TWO COMPONENT KIT	FOLLOW MANUFACTURERS INSTRUCTIONS FURNISHED WITH EACH KIT		
			45 TO 60 MINUTES AT 70°F (21°C)	SEE FIG. 9
BMS 5-25, TYPE II, GRADE 1 ADHESIVE	EPIBOND 1539A EPIBOND 1539B	113 ±5.6 100 ±5.0	60 MINUTES AT 70°F (21°C) TO 80°F (27°C)	12 HRS MIN AT 65°F (19°C) TO 100°F (38°C). 2 HRS MIN AT 115°F (46°C) TO 135°F (57°C)
BMS 5-92, TYPE I ADHESIVE	EC2216A GRAY EC2216B WHITE	140 100	2 HRS BELOW 100°F (38°C)	24 HRS MIN AT 65°F (19°C) TO 100°F (38°C). 180 ±10 MINUTES AT 110°F (43°C) TO 130°F (54°C)
BMS 5-90, TYPE 2N, CLASS 250-2-5, GRADE 50	AF-3015 FOAMING ADHESIVE FILM		5 DAYS AT 90°F (32°C)	SEE TEXT
BMS 5-90, TYPE 2N, CLASS 250-10-10, GRADE 50	AF-3024 FOAMING ADHESIVE FILM		10 DAYS AT 90°F (32°C)	SEE TEXT
BMS 5-51, TYPE 2, CLASS I, GRADE 15	AF-126		5 DAYS AT 65°F (19°C) TO 80°F (27°C)	SEE TEXT
BMS 5-51, TYPE 2, CLASS II, GRADE 15	AF-126-2		5 DAYS AT 65°F (19°C) TO 80°F (27°C)	SEE TEXT

Resin, Prepreg, and Adhesive Specifications and Mixing Procedures
Figure 2 (Sheet 1)

RESIN, PREPREG, OR ADHESIVE TYPE	COMPONENTS	PARTS BY WEIGHT	OPEN TIME BEFORE USE, OR POT LIFE OF MIXTURE	CURING TIME
BMS 5-80, TYPE 2, CLASS I, GRADE 15			5 DAYS AT 65°F (19°C) TO 80°F (27°C)	SEE TEXT
BMS 5-80, TYPE 2, CLASS II, GRADE 15	FM-123-5		5 DAYS AT 65°F (19°C) TO 80°F (27°C)	SEE TEXT
BMS 5-101, TYPE II, GRADE 10	FM-73M FM-73M-OST EA-9628NW AF-163-2 OST		10 DAYS AT 65°F (19°C) TO 80°F (27°C)	SEE TEXT
BMS 5-129, TYPE 2, CLASS IA, GRADE 15	AF-126		5 DAYS AT 65°F (19°C) TO 80°F (27°C)	SEE TEXT
BMS 5-129, TYPE 2, CLASS IIA, GRADE 15	AF-126-2		5 DAYS AT 65°F (19°C) TO 80°F (27°C)	SEE TEXT
BMS 5-129, TYPE 2, CLASS IIB, GRADE 15	FM-123-2		5 DAYS AT 65°F (19°C) TO 80°F (27°C)	SEE TEXT
BMS 5-129, TYPE 2 CLASS IIC, GRADE 15	FM-123-5		5 DAYS AT 65°F (19°C) TO 80°F (27°C)	SEE TEXT
BMS 8-79 (GLASS PREPREG) CLASS III, GRADE 1			A	SEE TEXT
STYLE 120	120-F155-5-F69 120-F255-1-F69 MXB7701-120-Z-6040 NARMCO-3203-120,VOLAN A NARMCO-3203-120,Z6040 NARMCO-3203F-120,Z6040 120-F155-5-CS272 G120/F6986S03-S920NM			
STYLE 1581	1581-F155-5-F69 1581-F255-1-F69 MXB7701-158-Z-6040 NARMCO-3203-1581,VOLAN A NARMCO-3203-1581,Z6040 NARMCO-3203F-1581,Z6040 1581-F155-5-CS272 G1581-F6986S03-S920NM			
STYLE 7781	7781-F155-5-F69 7781-F255-1-F69 MXB7701-7781-Z-6040 NARMCO-3203-7781,VOLAN A NARMCO-3203-7781,Z6040 NARMCO-3203F-7781,Z6040 7781-F155-5-CS272 G7781-F6986S03-S920NM			

Resin, Prepreg, and Adhesive Specifications and Mixing Procedures
Figure 2 (Sheet 2)

RESIN, PREPREG, OR ADHESIVE TYPE	COMPONENTS	PARTS BY WEIGHT	OPEN TIME BEFORE USE, OR POT LIFE OF MIXTURE	CURING TIME
BMS 8-168 (GRAPHITE PREPREG) CLASS 1 (TAPE) TYPE II			A	SEE TEXT
GRADE 95	T3T-95-12-F155-76 T6C-95-12-F155-76 T2C-95-12-F155-76 HYE-10714AC(95) CYCOM 919GT-3095 R-6268-C3K-95-40			
GRADE 145	T3T-145-12-F155-76 T6C-145-12-F155-76 T2C-145-12-F155-76 HYE-10714AC(145) HY-E 16714AD(145)II CYCOM 919GT-3145 R-6268-C12K-145-40			
GRADE 190	T3T-190-12-F155-76 T6C-190-12-F155-76 T2C-190-12-F155-76 HYE-10714AC(190) HY-E 16714AD(190)II C3U190/F6986S03 CYCOM 919GT-3190 R-6268-C12K-190-40			
CLASS 2 (FABRIC) TYPE II				
STYLE 3K-70-PW	W3T-282-42-F155-76 W3C-282-42-F155-76 HMF-322/7714AC C3WPW/F6986S03 C3BWPW/F6986S03 CYCOM 919GF-3070PW R-6268-C3K-70-PW-42			
STYLE 3K-135-8H	F3T-584-42-F155-76 CYCOM 919GF-3135H8 R-6268-C3K-135-8H-42			

Resin, Prepreg, and Adhesive Specifications and Mixing Procedures
Figure 2 (Sheet 3)

141986

RESIN, PREPREG, OR ADHESIVE TYPE	COMPONENTS	PARTS BY WEIGHT	OPEN TIME BEFORE USE, OR POT LIFE OF MIXTURE	CURING TIME
BMS 8-219 (ARAMID FABRIC) STYLE 120	KEVLAR 49-120 F155-71 MXM 7714/KEVLAR 49-120 K120/F6986S03-KE-420 CYCOM 919 K120 R-9269-120K		A	SEE TEXT
STYLE 285	KEVLAR 49-285 F155-71 MXM 7714/KEVLAR 49-285 K285/F6986S03-KE-420 CYCOM 919 K285 R-9269-285K			
BMS 8-289 (ALUMINUM FOIL) TYPE O, CLASS 250 GRADE 1	CYCOM AEL-200-1/1100 ADH. WT. 0.025 ±0.01 LB/FT^2		10 DAYS AT 10°F (-12°C) TO 95°F (35°C)	SEE TEXT
	C-CLAD H-250-025 ADH. WT. 0.025 ±0.01 LB/FT^2			
GRADE 2	C-CLAD H-250/350-002 ADH. WT. 0.002 ±0.0015 LB/FT^2			

Resin, Prepreg, and Adhesive Specifications and Mixing Procedures
Figure 2 (Sheet 4)

141990

WARNING: THESE CHEMICALS CONTAIN TOXIC INGREDIENTS. PROVIDE ADEQUATE VENTILATION AND PROTECT THE SKIN AND EYES FROM CONTACT WITH UNCURED RESINS OR CURING AGENT. WEAR RUBBER GLOVES OVER COTTON GLOVES FOR PROTECTION OF HANDS. IF SKIN IS EXPOSED TO DIRECT CONTACT WITH UNCURED RESINS OR CURING AGENT, WASH WITH WARM WATER OR SOAP. AVOID THE USE OF SOLVENTS FOR CLEANING THE SKIN.

CAUTION: TO PREVENT CONTAMINATION OF THE RESIN, DO NOT USE WAXED CONTAINERS FOR MIXING.

	RESIN MIXING AND ADHESIVE PREPARATION PROCEDURES
RESIN MIX 1 BMS 5-25, BMS 5-92	ADD HARDENER TO RESIN AND MIX THOROUGHLY
BMS 5-90, BMS 5-51, BMS 5-80, BMS 5-101, BMS 5-129	REMOVE WRAPPER FILM BEFORE USE

NOTES

- REFER TO 51-20-00 FOR SOURCES OF MATERIALS

[A] OUT-TIME OF THIS MATERIAL IS 200 EXPOSURE UNITS. ONE EXPOSURE UNIT IS ACCUMULATED EACH HOUR THE MATERIAL IS EXPOSED TO TEMPERATURES BETWEEN 10°F (-12°C) AND 80°F (27°C). THREE EXPOSURE UNITS ARE ACCUMULATED EACH HOUR THE MATERIAL IS EXPOSED TO TEMPERATURES BETWEEN 81°F (27°C) AND 100°F (38°C). MATERIALS EXPOSED TO TEMPERATURES ABOVE 100°F (38°C) ARE TO BE REJECTED

Resin, Prepreg, and Adhesive Specifications and Mixing Procedures
Figure 2 (Sheet 5)

141996

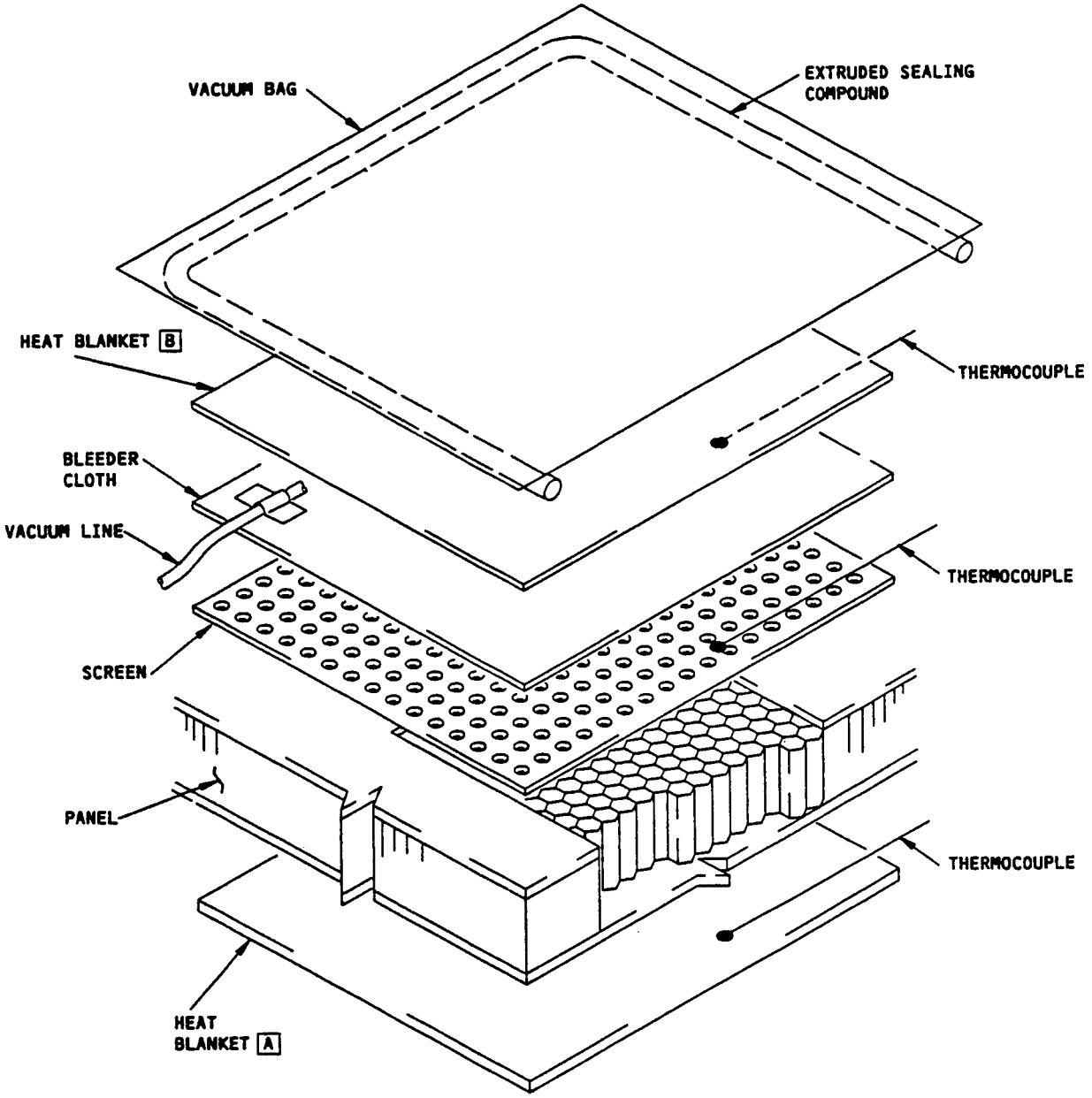

NOTES

A PREFERRED LOCATION OF HEAT BLANKET WHEN OPPOSITE FACE IS ACCESSIBLE

B ALTERNATE LOCATION OF HEAT BLANKET WHEN OPPOSITE SIDE IS INACCESSIBLE. THIS LOCATION MAY BE USED FOR AN ADDITIONAL HEAT BLANKET TO ACCELERATE WATER REMOVAL

Water Removal From Honeycomb Sandwich
Figure 3

141831

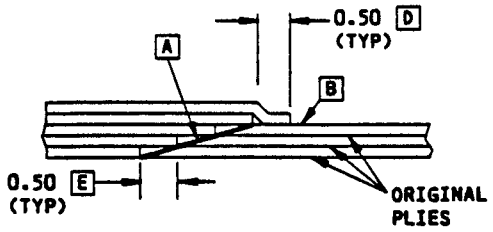

TAPER SANDED SKIN
DETAIL I

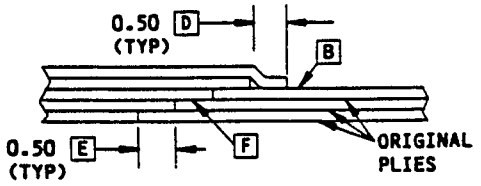

STEP SANDED SKIN
DETAIL II

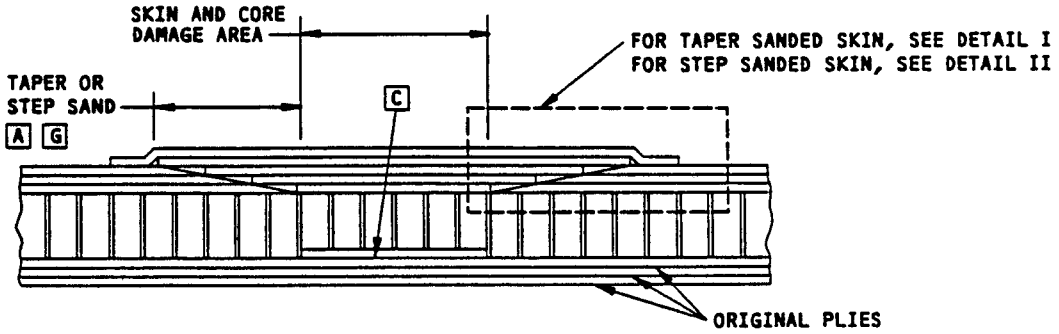

SECTION THRU TYPICAL REPAIR

NOTES

A TAPER SAND OR STEP SAND EXISTING PLIES AROUND REPAIR AREA A MINIMUM OF 0.50 INCH FOR EACH EXISTING PLY

B DO NOT EXPOSE OR DAMAGE FILAMENTS IN UNTAPERED OR UNSTEPPED AREA WHEN SANDING

C SANDING MUST NOT EXPOSE OR DAMAGE THE FILAMENTS IN BOND PLY (PLY BONDED TO ORIGINAL CORE)

D FIRST EXTRA REPAIR PLY MUST OVERLAP AT LEAST 0.50 INCH PAST EDGE OF LAST REPAIR PLY. EACH SUCCEEDING EXTRA REPAIR PLY MUST OVERLAP AT LEAST 0.50 INCH PAST EDGE OF PRECEDING EXTRA REPAIR PLY

E EACH REPAIR PLY MUST OVERLAP AT LEAST 0.50 INCH PAST EDGE OF PRECEDING REPAIR PLY

F REMOVE DAMAGED PLIES IN STEPS. DO NOT EXPOSE OR DAMAGE FILAMENTS IN STEPPED AREA

G TAPER SAND SURFACES IN AREAS OF CRITICAL AERODYNAMIC SMOOTHNESS. REFER TO 51-70

Sanding and Overlap Requirements
Figure 4

142002

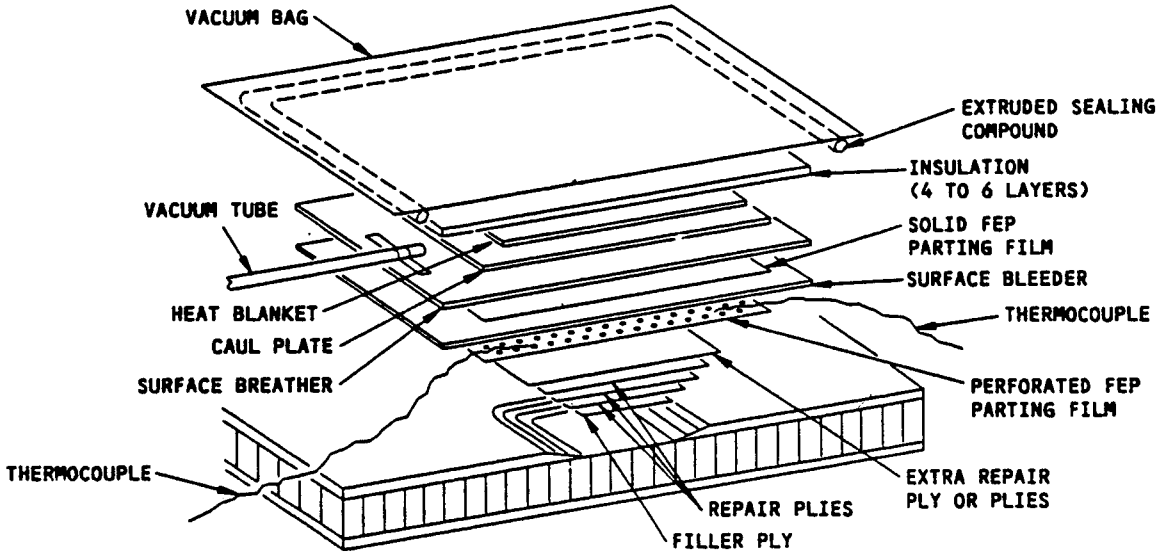

HONEYCOMB PANEL SHOWN
SOLID LAMINATE SIMILAR

BAGGING SEQUENCE FOR SKIN PLY REPAIR

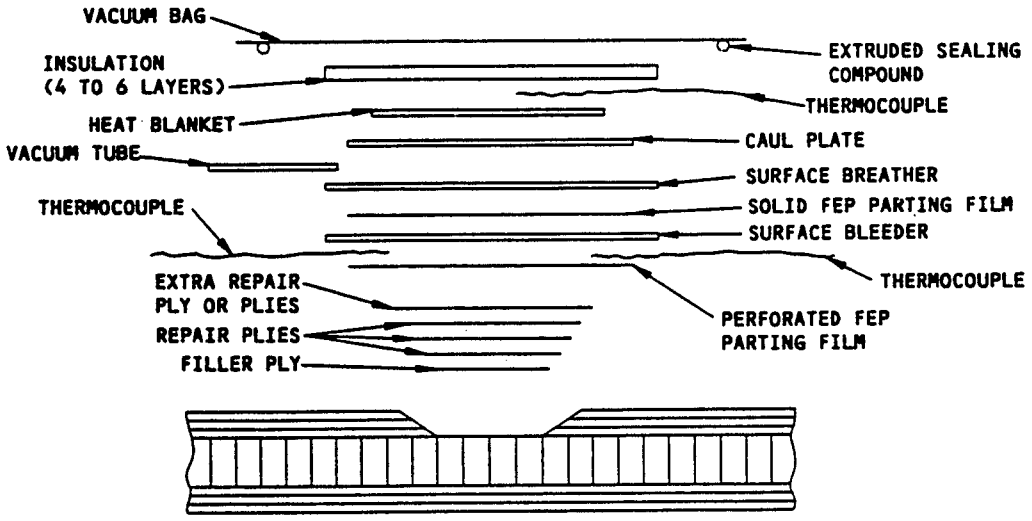

SECTION THRU SKIN PLY REPAIR

NOTES

[A] ONE PLY OF ADHESIVE FILM (FOR FULL DEPTH CORE REPLACEMENT, WHERE DAMAGE DOES NOT EXTEND THROUGH BOTH SKINS). FOR PARTIAL CORE REPLACEMENT USE TWO PLIES OF ADHESIVE FILM WITH ONE PLY OF GLASS FABRIC BETWEEN THEM

Application of Pressure During Cure
Figure 5 (Sheet 1)

141832

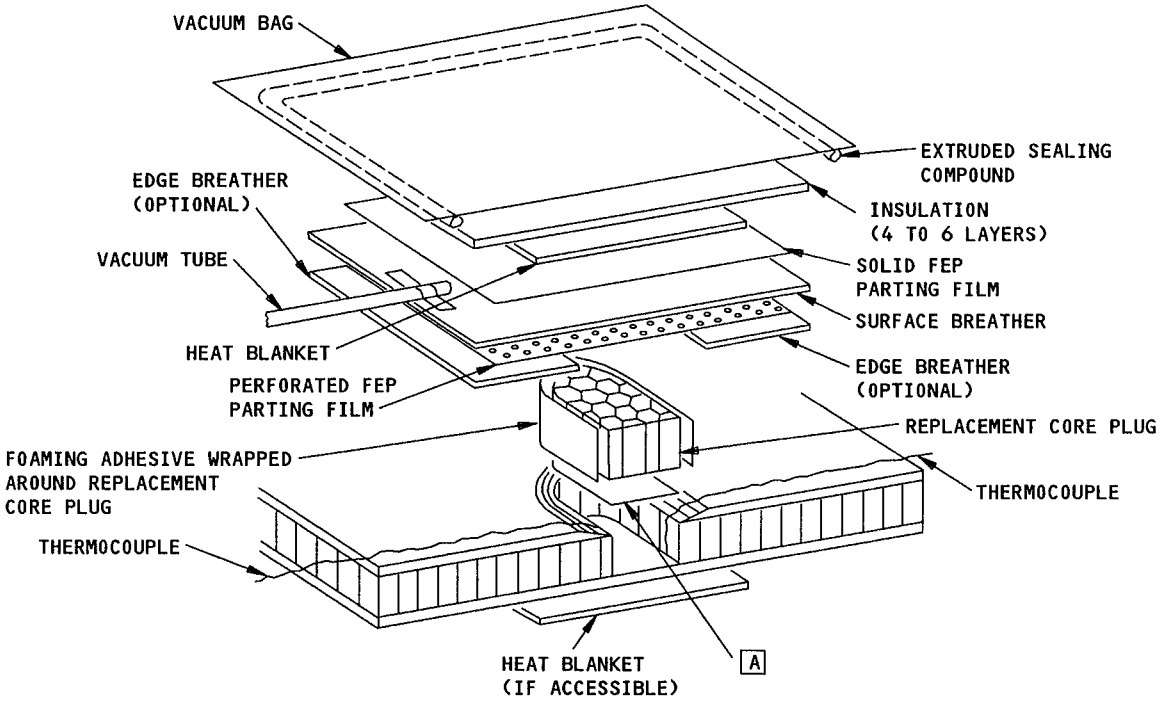

BAGGING SEQUENCE FOR CORE REPLACEMENT

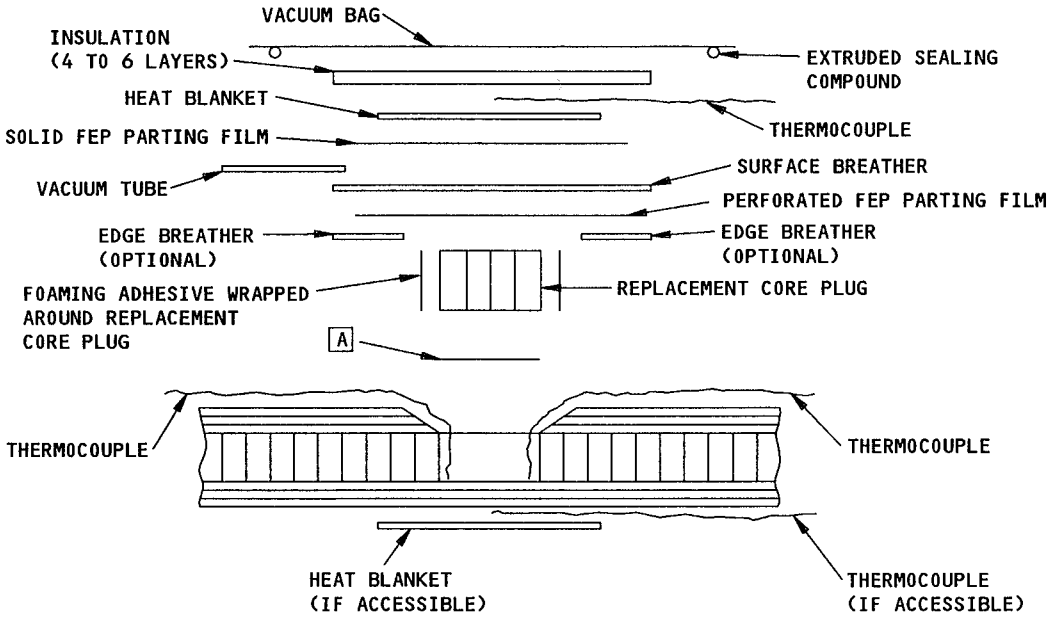

SECTION THRU CORE REPLACEMENT REPAIR

Application of Pressure During Cure
Figure 5 (Sheet 2)

ORIGINAL PLY MATERIAL		REPAIR PLY MATERIAL	REPAIR PLY SUBSTITUTE MATERIAL
GLASS FABRIC	BMS 8-79, STYLE 120	BMS 8-79, TYPE 120	BMS 8-79, TYPE 1581 OR TYPE 7781 [A]
	BMS 8-139, STYLE 120		
	BMS 8-169, TYPE 120		
	BMS 8-79, STYLE 1581	BMS 8-79, TYPE 1581 OR TYPE 7781	BMS 8-79, TYPE 120 [B]
	BMS 8-139, STYLE 181		
ARAMID FABRIC	BMS 8-218, STYLE 120	BMS 8-219, STYLE 120	BMS 8-79, TYPE 120 [C]
	BMS 8-219, STYLE 120		
	BMS 8-218, STYLE 285	BMS 8-219, STYLE 285	BMS 8-79, TYPE 1581 OR TYPE 7781 [D]
	BMS 8-219, STYLE 285		
GRAPHITE TAPE	BMS 8-168, TYPE II, CLASS 1, ALL GRADES	BMS 8-168, TYPE II, CLASS 1, SAME GRADE AS ORIGINAL	BMS 8-168, TYPE II, CLASS 2, STYLE 3K-70-PW [E]
	BMS 8-212, TYPE II, CLASS 1 OR 3, ALL GRADES		
GRAPHITE FABRIC	BMS 8-168, TYPE II, CLASS 2, STYLE 3K-70-PW	BMS 8-168, TYPE II, CLASS 2, STYLE 3K-70-PW	NONE
	BMS 8-212, TYPE IV, CLASS 2, STYLE 3K-70-PW		
	BMS 8-256, TYPE I, CLASS 2, STYLE 3K-70-PW		
	BMS 8-258, CLASS 2, STYLE 3K-70-PW		
	BMS 8-212, TYPE III, CLASS 2, STYLE 3K-135-8H	BMS 8-168, TYPE II, CLASS 2, STYLE 3K-135-8H	NONE
ALUMINUM FOIL/GLASS FABRIC	BMS 8-289, TYPE 120, ALL CLASSES AND GRADES	BMS 8-79, TYPE 120	NONE
ALUMINUM COATED GLASS FABRIC	BMS 8-278, TYPE I, ALL CLASSES	BMS 8-79, TYPE 1581 OR TYPE 7781	NONE
	BMS 8-278, TYPE II, ALL CLASSES	BMS 8-79, TYPE 120	NONE

REPAIR PLY MATERIALS AND SUBSTITUTE MATERIALS
TABLE I

NOTES

[A] USE ONE PLY OF BMS 8-79, STYLE 1581 OR STYLE 7781 IN PLACE OF TWO PLIES OF BMS 8-79, STYLE 120

[B] USE THREE PLIES OF BMS 8-79, STYLE 120 IN PLACE OF ONE PLY OF BMS 8-79, STYLE 1581 OR STYLE 7781

[C] USE ONE PLY OF BMS 8-79, STYLE 120 IN PLACE OF ONE PLY OF BMS 8-219, STYLE 120

[D] USE ONE PLY OF BMS 8-79, STYLE 1581 OR STYLE 7781 IN PLACE OF ONE PLY OF BMS 8-219, STYLE 285

[E] FOR NUMBER OF GRAPHITE FABRIC PLIES REQUIRED, SEE TABLE II

Repair Ply Materials
Figure 6 (Sheet 1)

NUMBER OF PLIES					
ORIGINAL PLIES (GRAPHITE TAPE)				REPAIR PLIES (GRAPHITE FABRIC)	
TAPE GRADE	ORIGINAL PLY ORIENTATION			REPAIR PLY ORIENTATION	
	0° OR 90°	+45°	-45°	0° OR 90°	±45°
95	1	---	---	1	---
	---	1	---	---	1
	---	---	1	---	1
	---	1	1	---	1
145	1	---	---	1	1
	---	1	---	---	1
	---	---	1	---	1
190	1	---	---	2	---
	---	1	---	---	1
	---	---	1	---	1

SUBSTITUTION OF GRAPHITE FABRIC FOR GRAPHITE TAPE
TABLE II

ADHESIVE FILM SPECIFIED	ADHESIVE FILM SUBSTITUTES
BMS 5-101, TYPE II, GRADE 10	BMS 5-51, TYPE II, GRADE 15, ANY CLASS BMS 5-80, TYPE II, GRADE 15, ANY CLASS BMS 5-129, TYPE II, GRADE 15, ANY CLASS

ADHESIVE FILM SUBSTITUTE MATERIALS
TABLE III

Repair Ply Materials
Figure 6 (Sheet 2)

COMPONENT MATERIAL	EXTRA PLY MATERIAL
GRAPHITE/ARAMID/GLASS HYBRID	BMS 8-168, TYPE II, CLASS 2, STYLE 3K-70-PW [A]
GRAPHITE	BMS 8-168, TYPE II, CLASS 2, STYLE 3K-70-PW
ARAMID	BMS 8-219, STYLE 120 OR 285; OR BMS 8-79, STYLE 120 OR 1581

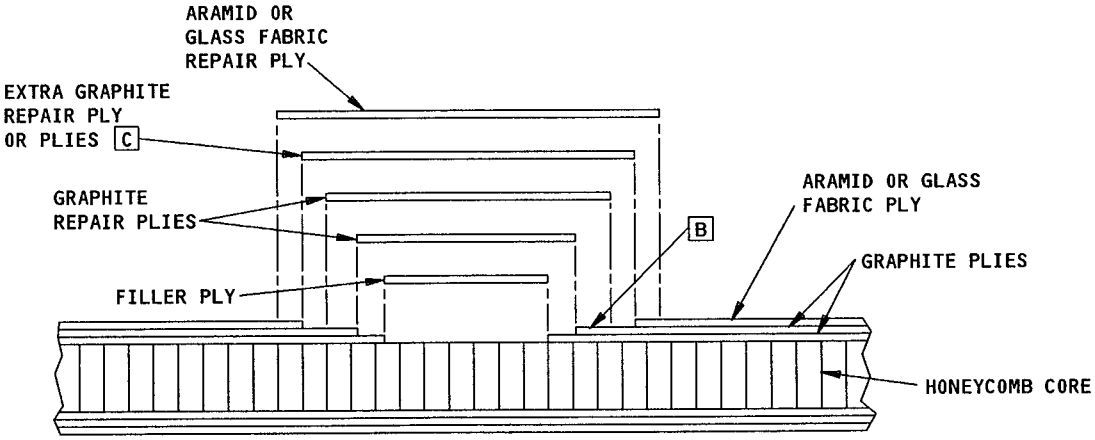

HONEYCOMB PANEL SHOWN
SOLID LAMINATE SIMILAR
DETAIL I

NOTES

[A] ON ALL HYBRID PANELS, AVOID BONDING ARAMID OR GLASS FABRIC PLIES BETWEEN GRAPHITE PLIES. SEE DETAIL I

[B] THE EXISTING OUTER PLY OF ARAMID OR GLASS FABRIC MUST BE STEP OR TAPER SANDED TO ALLOW AN ADDITIONAL OVERLAP OF 0.50 INCH FOR EACH EXTRA GRAPHITE REPAIR PLY

[C] LOCATE THE EXTRA GRAPHITE REPAIR PLY AT THIS LOCATION TO AVOID BONDING ARAMID OR GLASS FABRIC PLIES BETWEEN GRAPHITE PLIES

Extra Repair Ply Materials
Figure 7

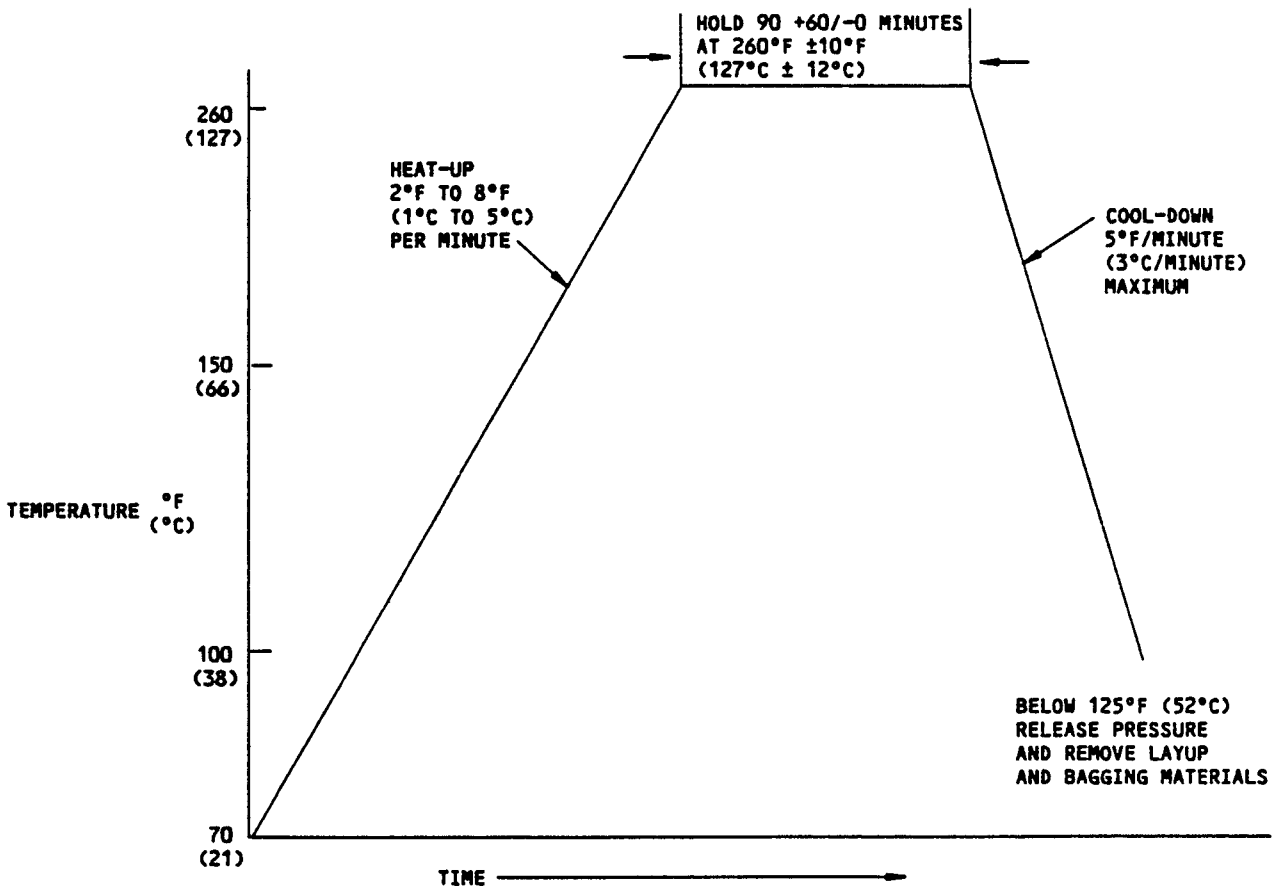

NOTES

- MAINTAIN A VACUUM OF 22 INCHES OF MERCURY MINIMUM DURING THE ENTIRE CURE CYCLE

Repair Cure Cycle
Figure 8

142020

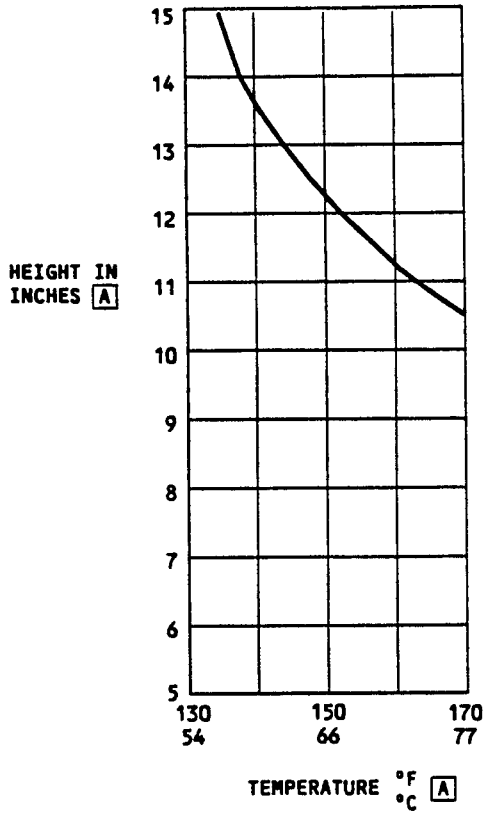

HEAT LAMP TEMPERATURE CURVE

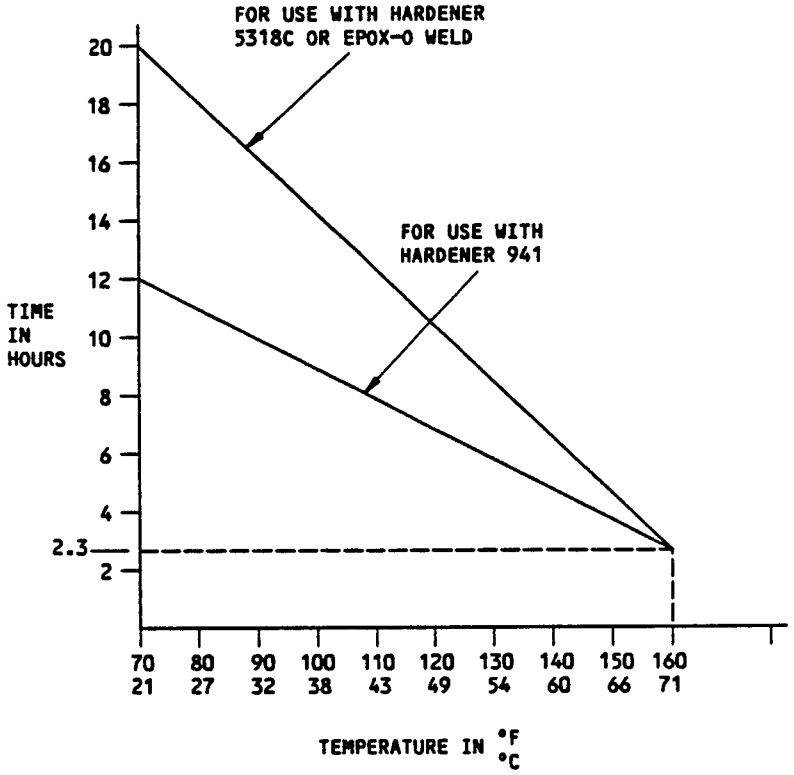

NOTES

- USE THERMOCOUPLES TO MONITOR TEMPERATURE

A THE HEIGHT IN INCHES OF 250 WATT HEAT LAMP FROM THE SURFACES OF THE PATCH VS TEMPERATURE AT SURFACE OF PART

Sealer Resin Cure Temperature and Heat Lamp Temperature Curve
Figure 9

141834

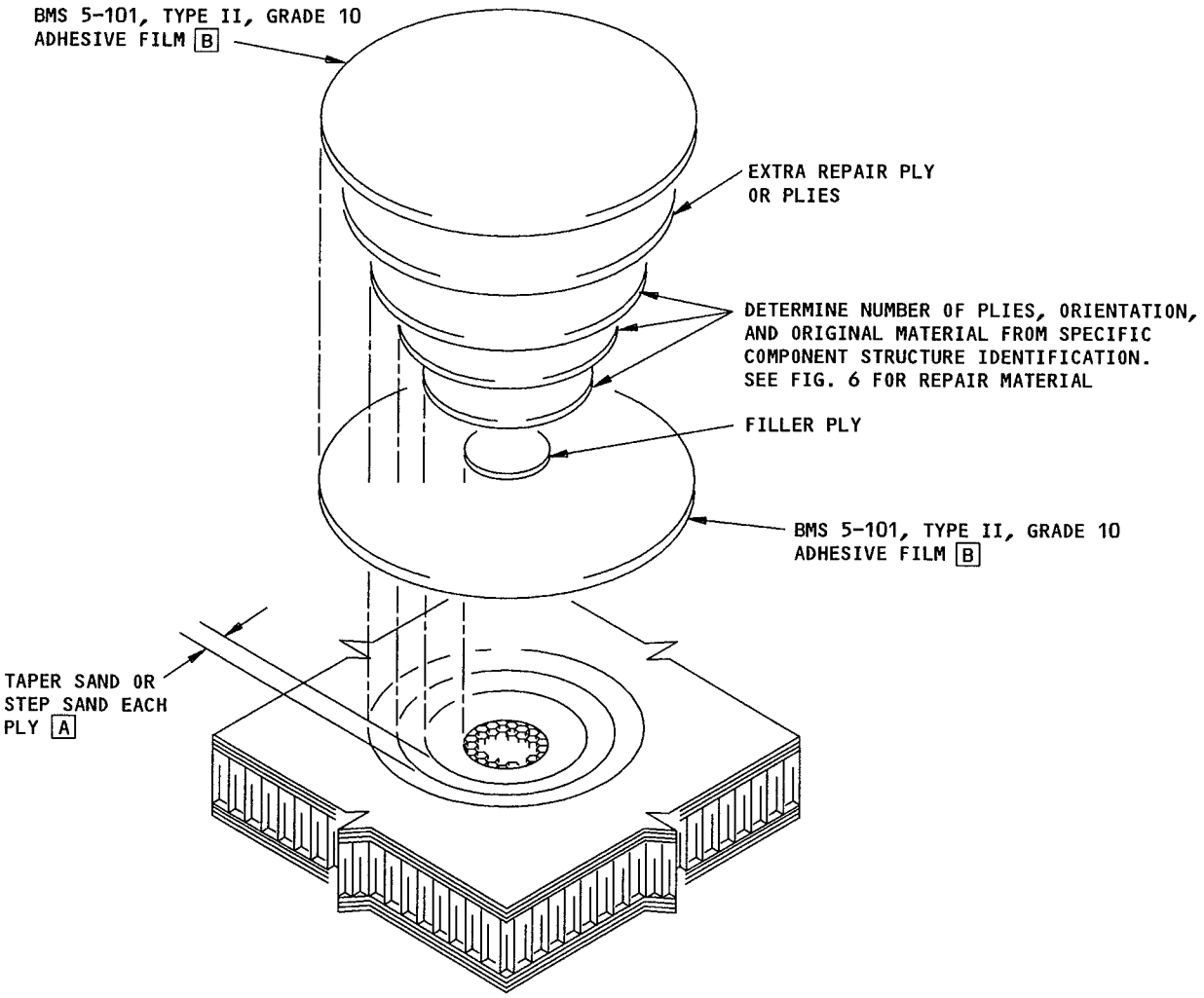

NOTES

A FOR EXTERNAL SKINS, TAPER SANDING IS RECOMMENDED. TAPER SAND SURFACES IN AREAS OF CRITICAL AERODYNAMIC SMOOTHNESS. REFER TO 51-70

B SEE FIG. 6, TABLE III FOR ADHESIVE FILM SUBSTITUTE MATERIALS

Repair 1 - Repair of Damage to One Skin of Honeycomb Panel
Figure 10

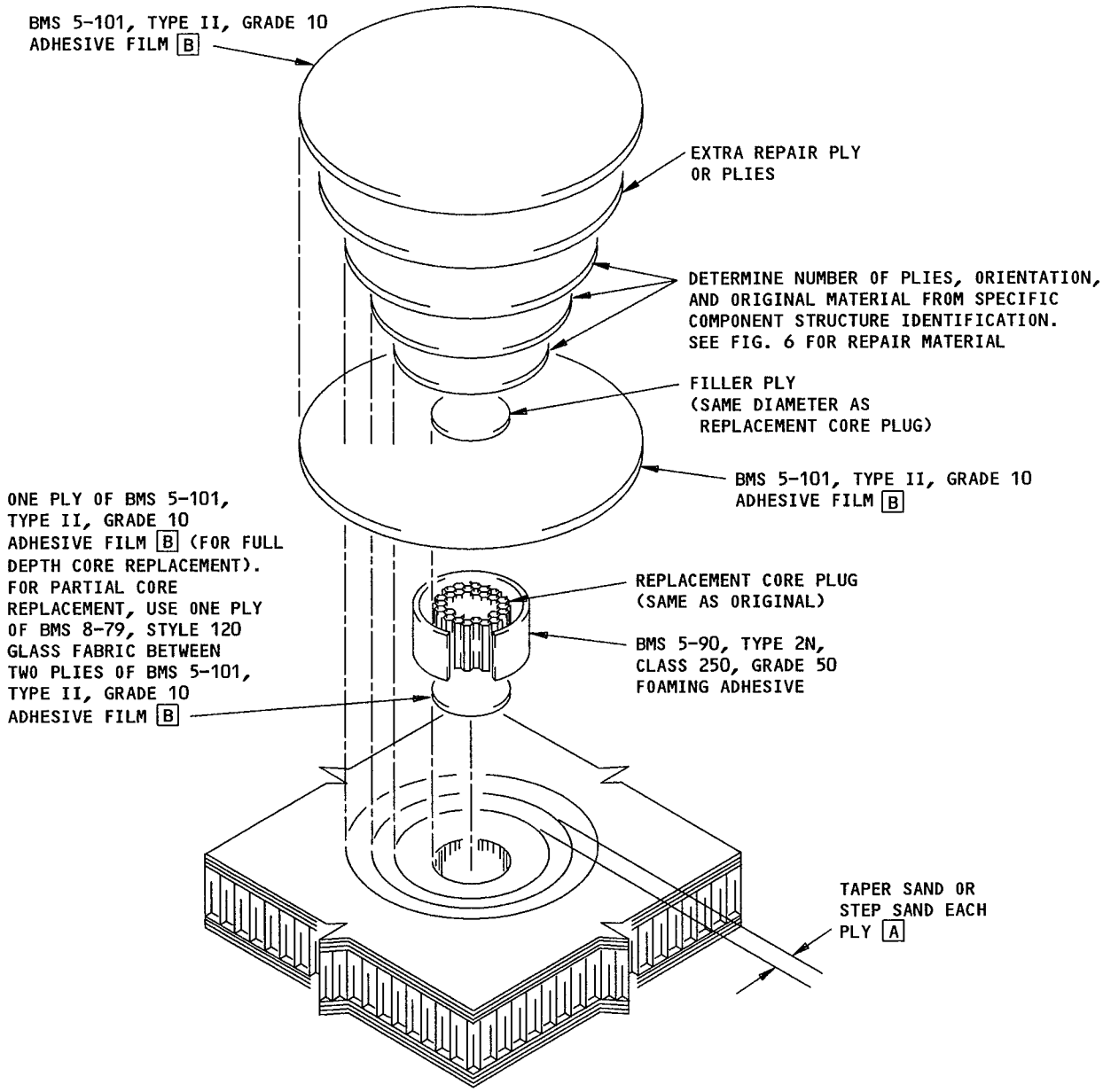

NOTES

[A] FOR EXTERNAL SKINS, TAPER SANDING IS RECOMMENDED. TAPER SAND SURFACES IN AREAS OF CRITICAL AERODYNAMIC SMOOTHNESS. REFER TO 51-70

[B] SEE FIG. 6, TABLE III FOR ADHESIVE FILM SUBSTITUTE MATERIALS

Repair 3 - Repair of Damage, Greater Than 0.50-inch Diameter, to One Skin and Honeycomb Core
Figure 11

142024

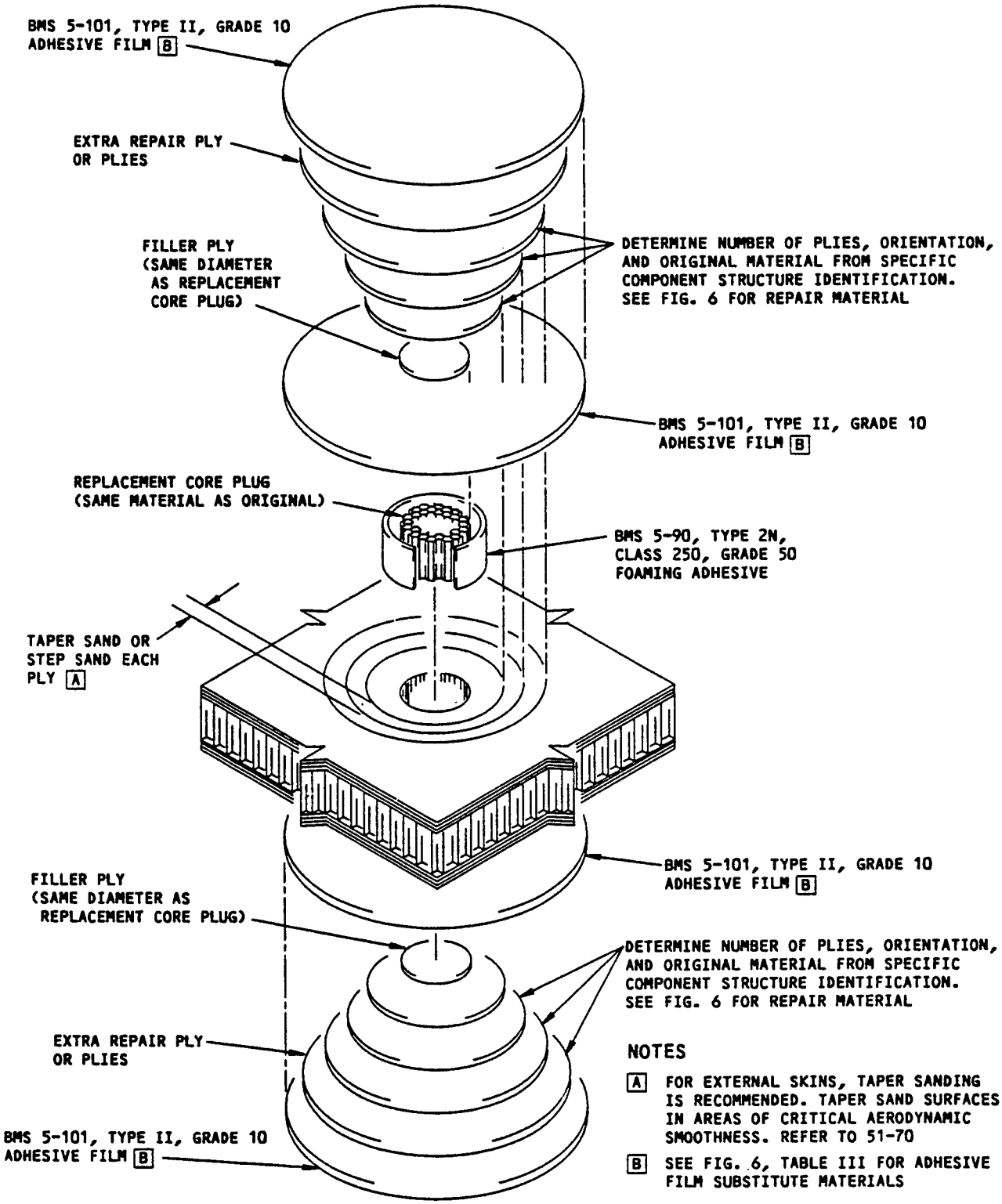

Repair 4 - Repair of Damage to Both Skins and Honeycomb Core
Figure 12

142030

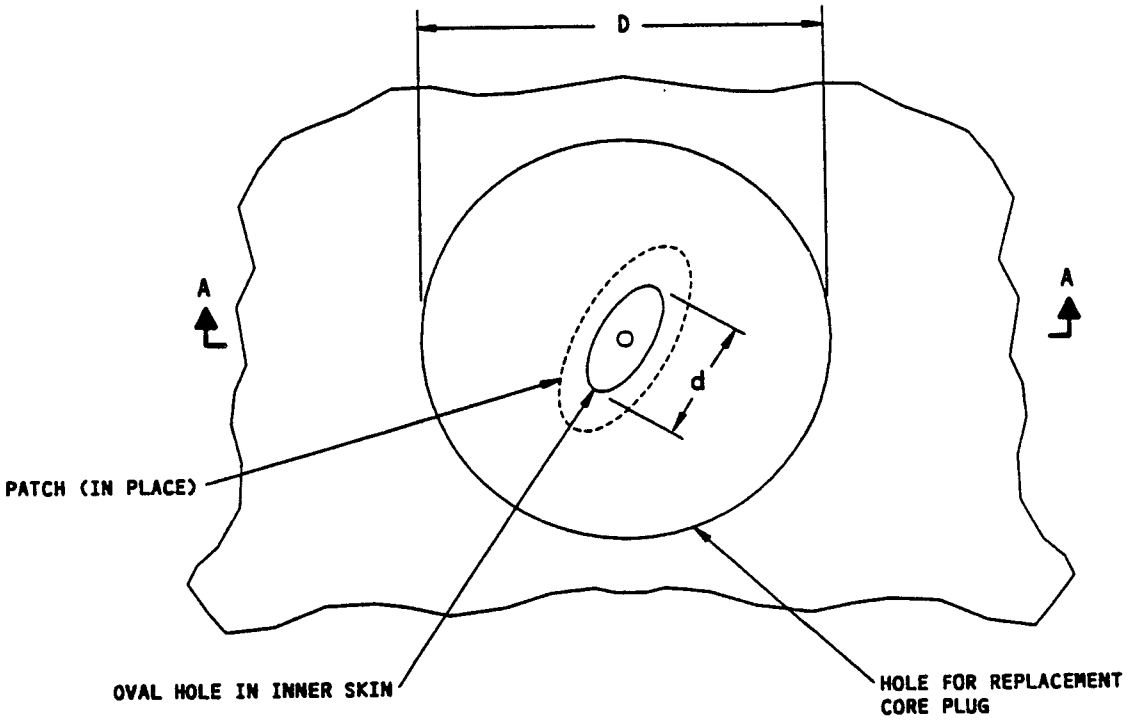

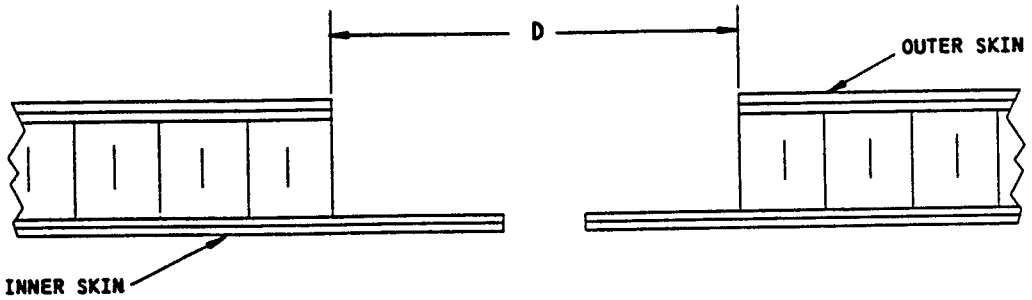

SECTION A-A
(PATCH NOT SHOWN)

NOTES

- D = d + N + 1
  d = MAJOR DIAMETER OF OVAL HOLE IN INNER SKIN
  N = NUMBER OF PLIES IN INNER SKIN
  D = DIAMETER OF HOLE FOR REPLACEMENT CORE PLUG

[A] FOR EXTERNAL SKINS, TAPER SANDING IS RECOMMENDED. TAPER SAND SURFACES IN AREAS OF CRITICAL AERODYNAMIC SMOOTHNESS. REFER TO 51-70

[B] SEE FIG. 6, TABLE III FOR ADHESIVE FILM SUBSTITUTE MATERIALS

DETAIL I

Repair 5 - Repair of Damage to Honeycomb Panel Where Access is Limited to One Side
Figure 13 (Sheet 1)

141836

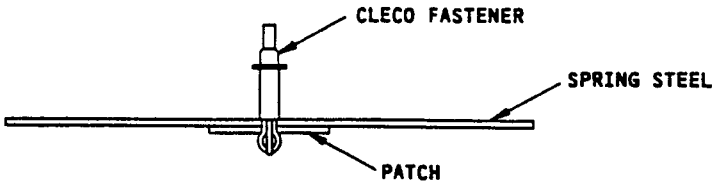

ASSEMBLE PATCH AND SPRING STEEL
DETAIL II

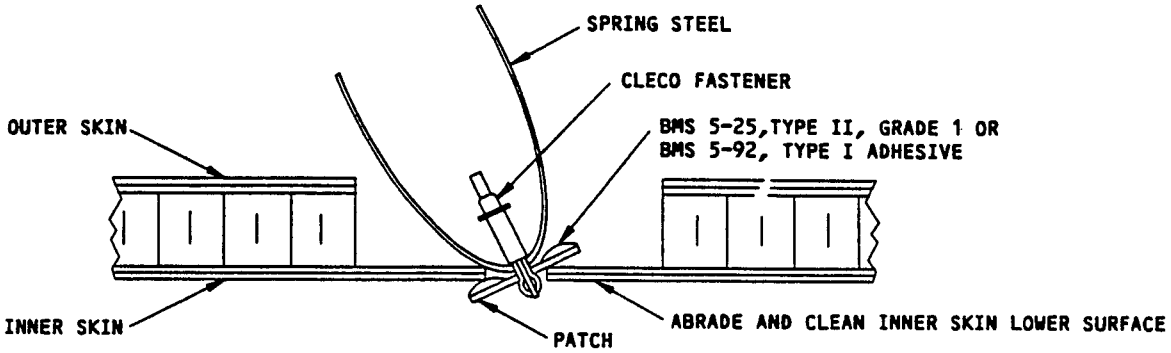

INSERT PATCH INTO OVAL HOLE
DETAIL III

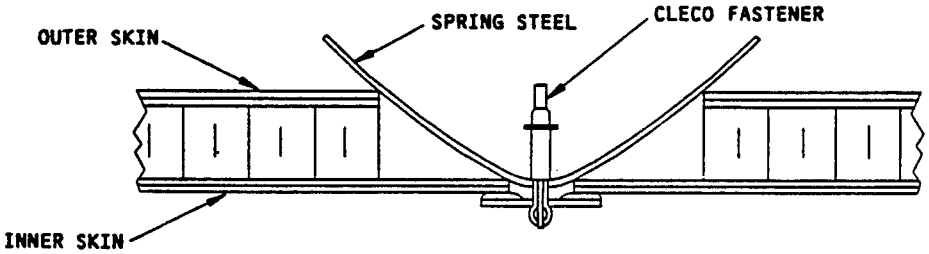

HOLD PATCH IN PLACE WHILE CURING
DETAIL IV

Repair 5 - Repair of Damage to Honeycomb Panel Where
Access is Limited to One Side
Figure 13 (Sheet 2)

141988

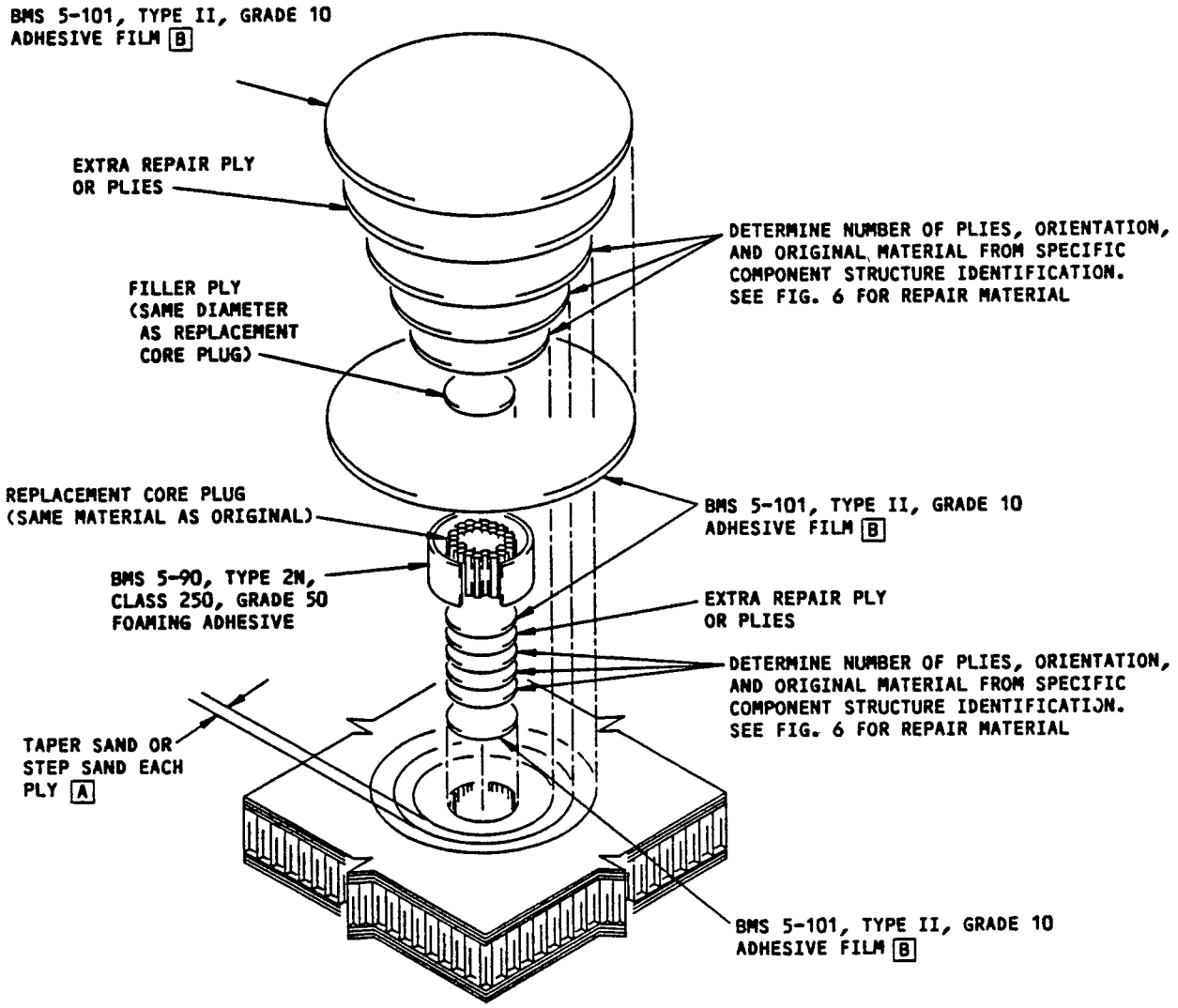

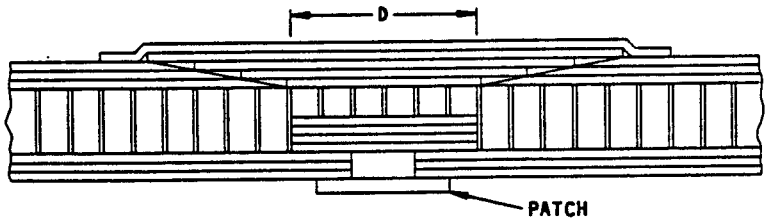

SECTION THRU REPAIR

Repair 5 - Repair of Damage to Honeycomb Panel Where
Access is Limited to One Side
Figure 13 (Sheet 3)

142019

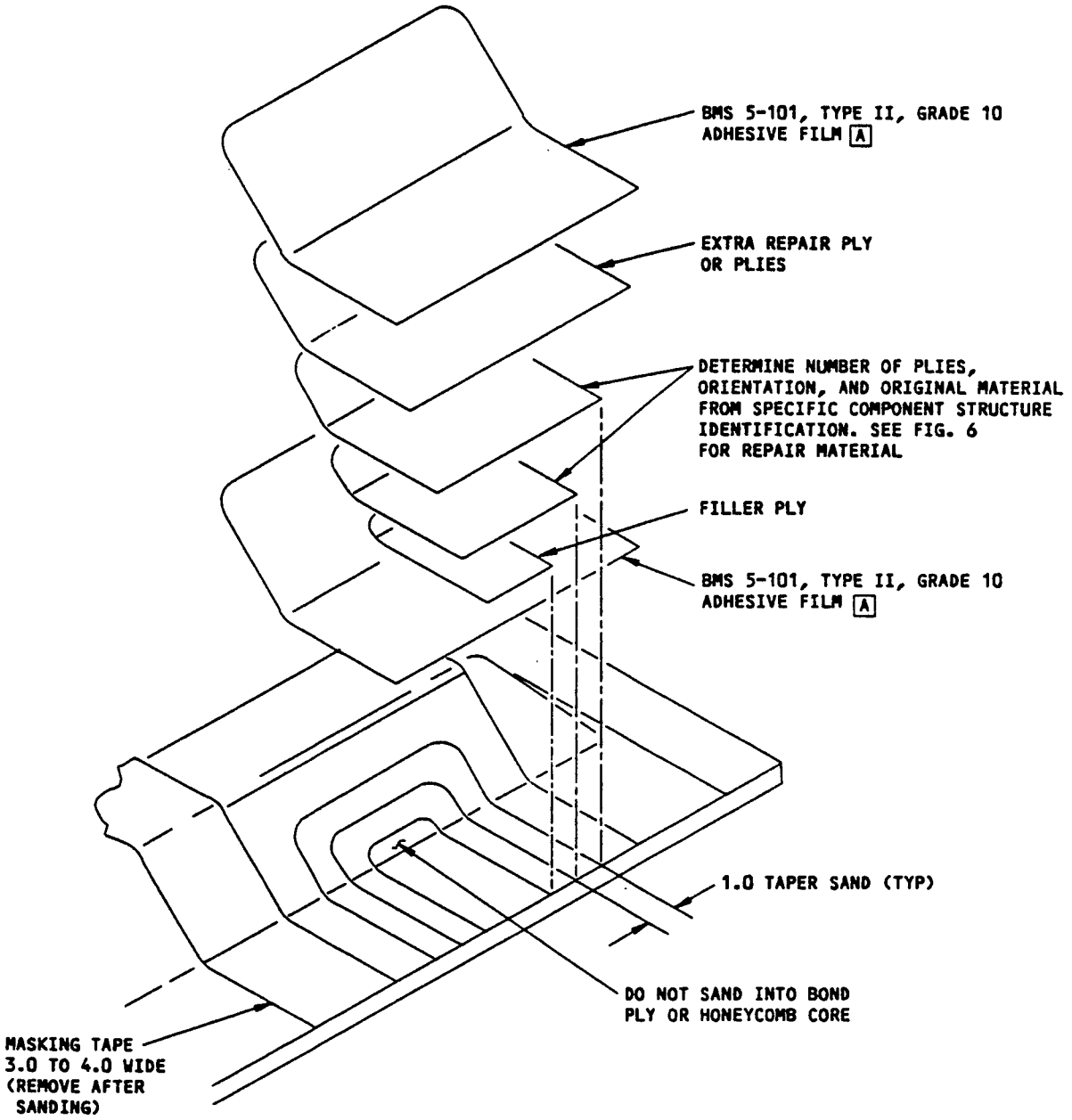

NOTES

A SEE FIG. 6, TABLE III FOR ADHESIVE FILM SUBSTITUTE MATERIALS

Repair 7 - Repair of Damage to Plies on Edge of Honeycomb Panel
Figure 14

141994

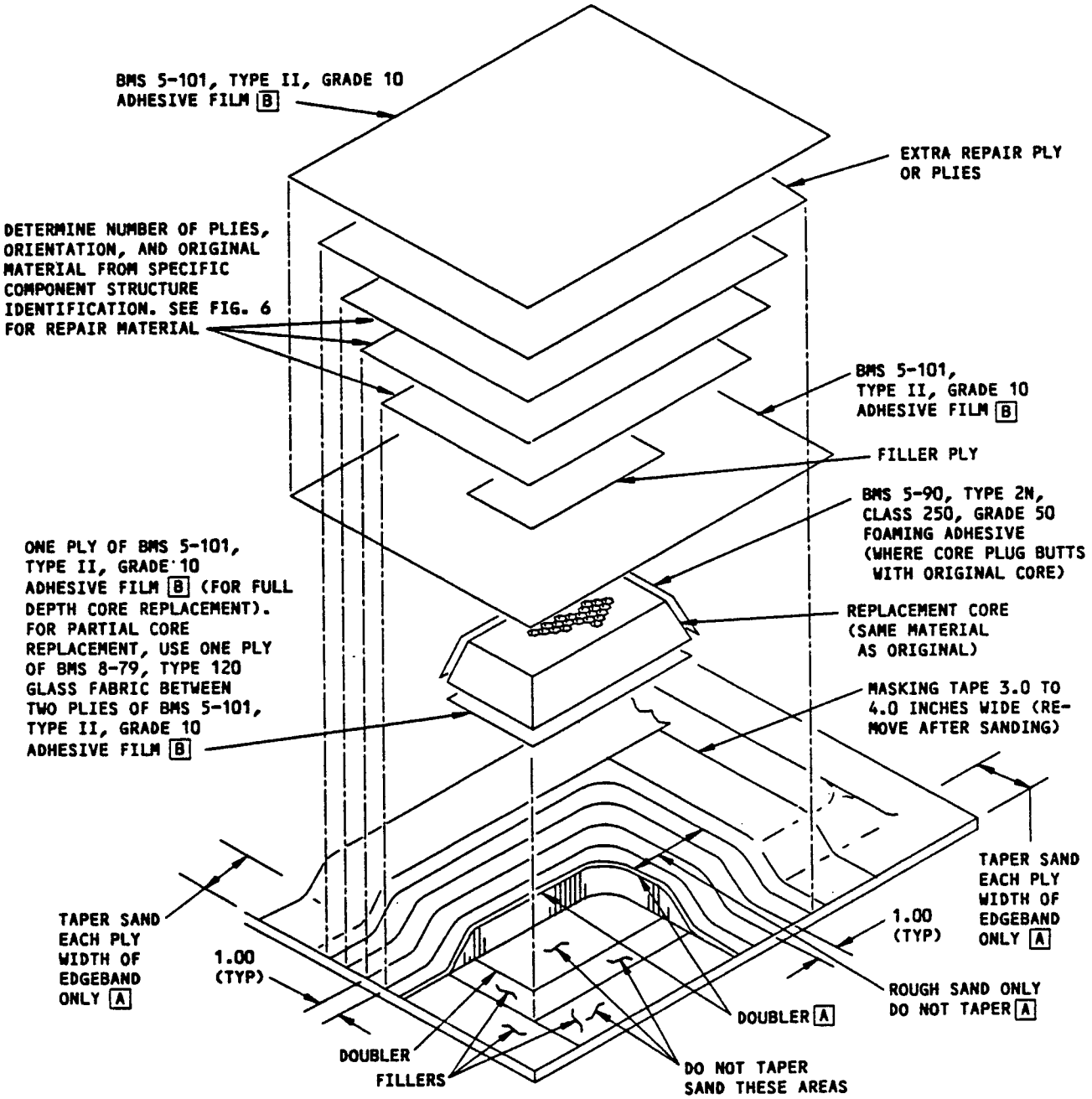

NOTES

A DO NOT TAPER SAND SKIN OR DOUBLER PLIES OVER CORE

B SEE FIG. 6, TABLE II FOR ADHESIVE FILM SUBSTITUTE MATERIALS

Repair 8 - Repair of Damage to Honeycomb Core on Edge of Honeycomb Panel
Figure 15

141998

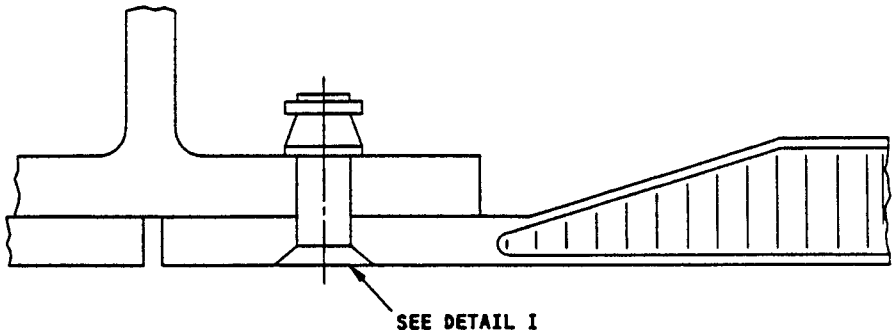

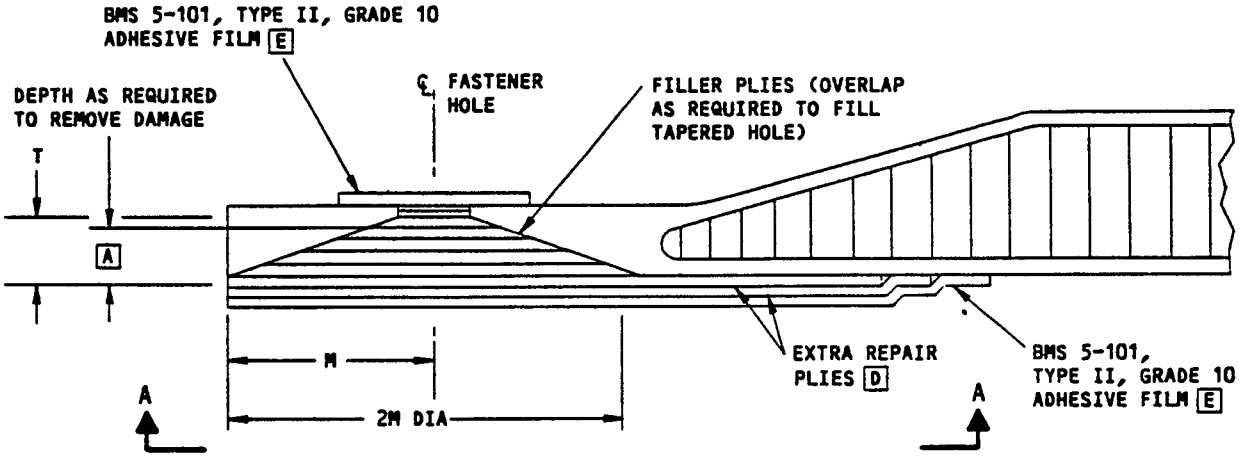

REPAIR OF HONEYCOMB PANEL SHOWN
REPAIR OF SOLID LAMINATE PANEL SIMILAR

DETAIL I

NOTES

- M = 5T MAXIMUM AS SHOWN, WHERE T IS THE THICKNESS OF THE EDGEBAND. DO NOT CUT INTO CORE
- THIS REPAIR APPLIES ONLY WHERE NO MORE THAN TWO ATTACH HOLES ARE DAMAGED IN ANY TEN CONSECUTIVE ATTACH HOLES
- D EQUALS FASTENER DIAMETER

A APPLY FILLER PLIES AS REQUIRED TO FILL THE DAMAGED AREA

B EXTEND EXTRA REPAIR PLY FAR ENOUGH SO THAT IT EXTENDS AT LEAST 0.50 INCH PAST EDGE OF DAMAGED AREA

C EXTEND EXTRA REPAIR PLY FAR ENOUGH TO PROVIDE AT LEAST 2D EDGE MARGIN

D ORIENT EXTRA REPAIR PLIES IN THE SAME DIRECTION AS THE ORIGINAL OUTER LAYER

E SEE FIG. 6, TABLE III FOR ADHESIVE FILM SUBSTITUTE MATERIALS

Repair 9 - Repair of Damaged Panel Attach Hole in Honeycomb Panel Edgebands or Along Edges of Solid Laminate Panels
Figure 16 (Sheet 1)

142014

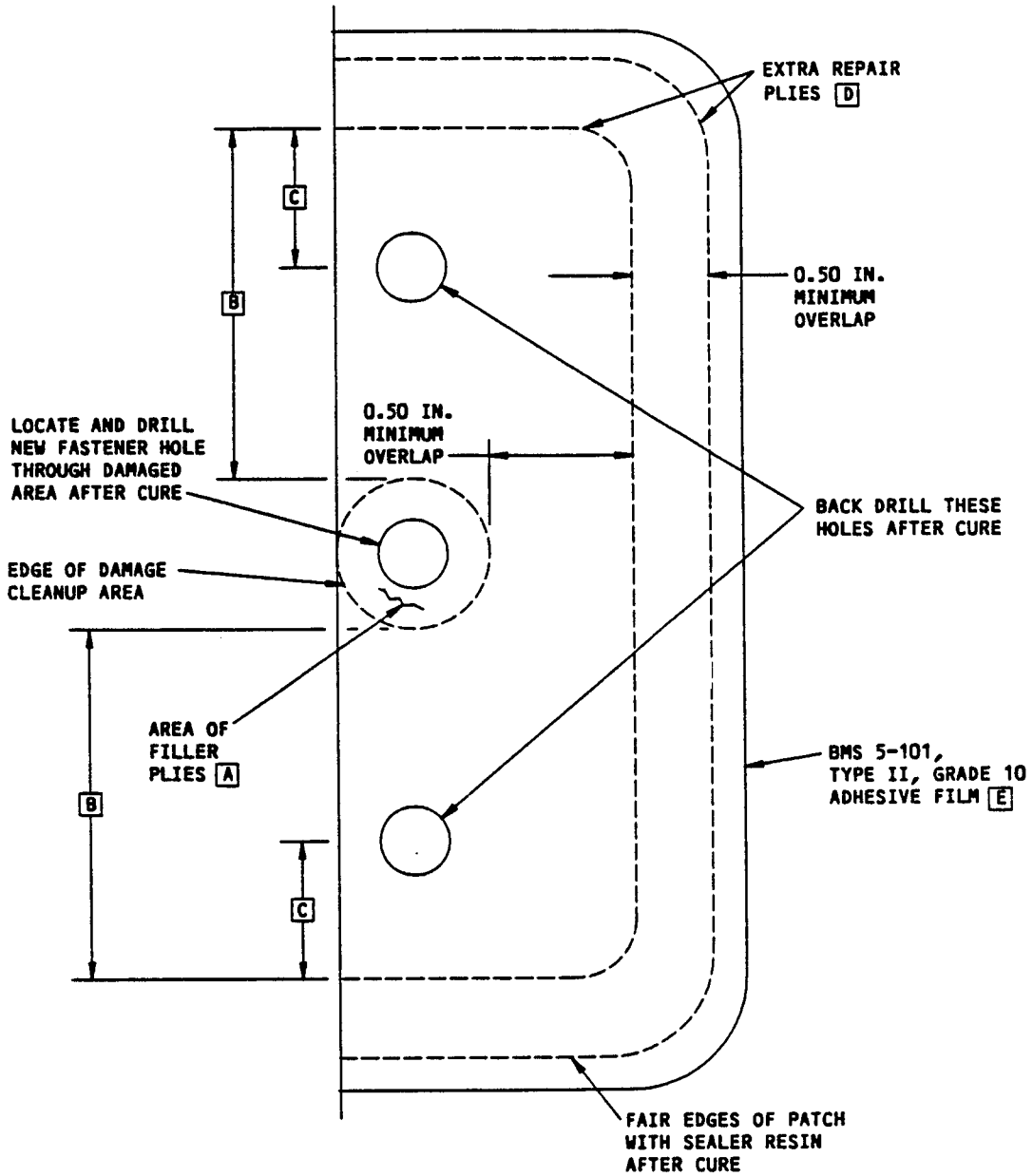

SECTION A-A

Repair 9 - Repair of Damaged Panel Attach Hole in Honeycomb Panel Edgebands or Along Edges of Solid Laminate Panels
Figure 16 (Sheet 2)

142001

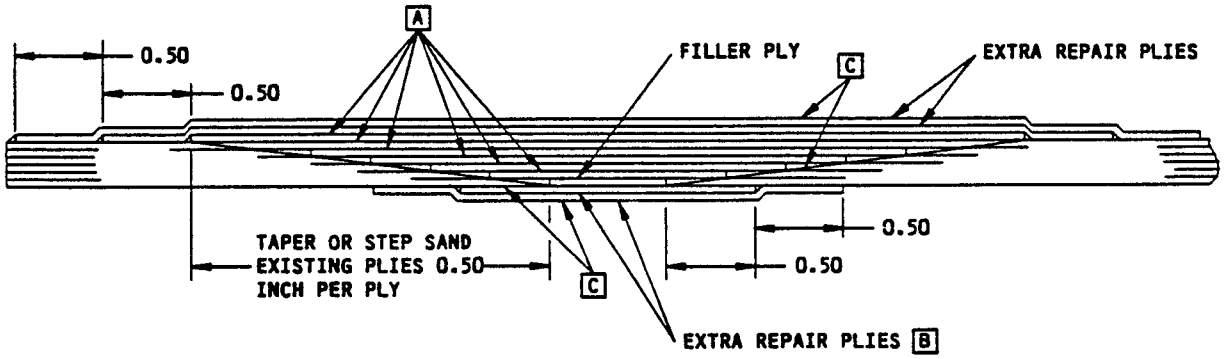

NOTES

A DETERMINE NUMBER OF PLIES, ORIENTATION, AND ORIGINAL MATERIAL FROM SPECIFIC COMPONENT STRUCTURE IDENTIFICATION. SEE FIG. 6 FOR REPAIR MATERIAL

B EXTRA REPAIR PLIES AT THIS LOCATION ARE REQUIRED ONLY IF THE DAMAGE PENETRATES THIS SURFACE

C PLACE ONE PLY OF BMS 5-101, TYPE II, GRADE 10 ADHESIVE FILM OVER THE REPAIR AREA BEFORE APPLING THE REPAIR PLIES AND OVER THE LAST REPAIR PLY IN THE PATCH. THE ADHESIVE FILMS ARE TO BE 1/8 INCH LARGER THAN THE LARGEST REPAIR PLY IN THE PATCH. SEE FIG. 6, TABLE III FOR ADHESIVE FILM SUBSTITUTE MATERIALS

Repair 11 - Repair of Damage, Greater than 0.50-inch Diameter, to Solid Laminates
Figure 17

142008

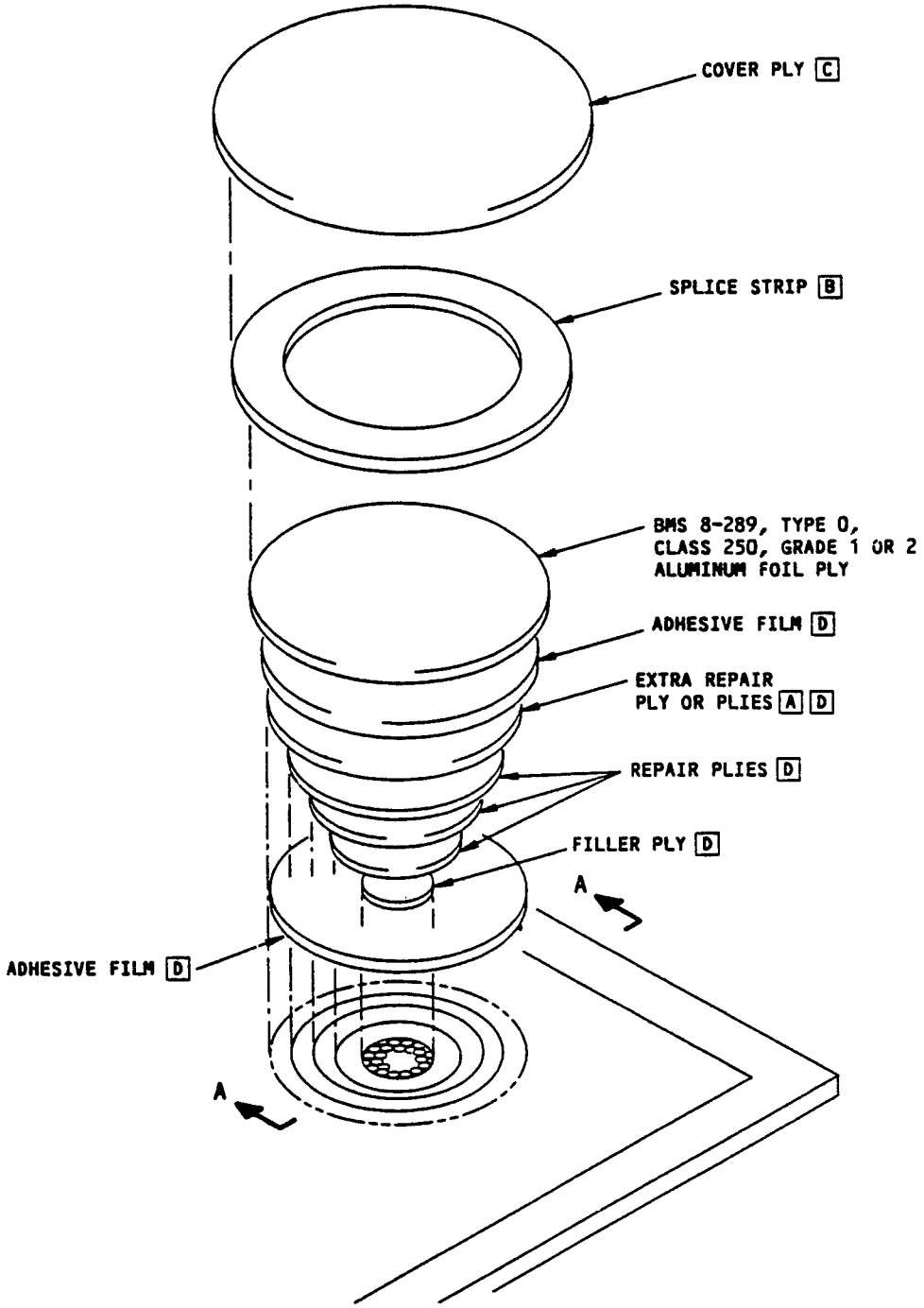

REPAIR PLY LAYUP
DETAIL I

Repair 13 - Repair of BMS 8-289 Aluminum Foil
Figure 18 (Sheet 1)

142003

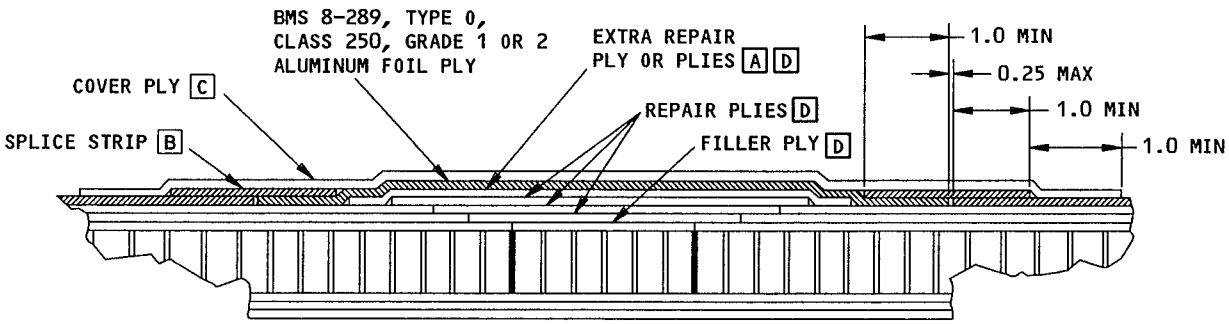

SECTION THRU REPAIR
SECTION A-A

NOTES

A THE ALUMINUM FOIL PLY MUST BE BONDED TO A GLASS FABRIC PLY. IF THE EXTRA REPAIR PLY IS NOT GLASS FABRIC, THEN AN ADDITIONAL PLY OF BMS 8-79, STYLE 120 GLASS FABRIC MUST BE INSTALLED AS THE OUTERMOST PLY

B BMS 8-289, TYPE 0, CLASS 250, GRADE 1 OR 2 WITH THE ADHESIVE SIDE UP OR ETCH-TREATED ALUMINUM

C BMS 8-289, TYPE 0, CLASS 250, GRADE 1 OR 2 WITH THE ADHESIVE SIDE DOWN OR BMS 5-101, TYPE II, GRADE 10 ADHESIVE FILM. SEE FIG. 6, TABLE III FOR ADHESIVE FILM SUBSTITUTE MATERIALS

D SEE APPLICABLE REPAIR PER PAR. 3.A., 3.C. THRU 3.E., 3.G. THRU 3.I., OR 3.K. FOR APPLICATION OF THESE PLIES

Repair 13 - Repair of BMS 8-289 Aluminum Foil
Figure 18 (Sheet 2)

GRAPHITE, ARAMID, AND GRAPHITE/ARAMID/GLASS FABRIC HYBRID REINFORCED EPOXY LAMINATES AND NONMETALLIC HONEYCOMB SANDWICH REPAIRS - 350°F (177°C) CURE

1. General

A. These repairs will not have an effect on a Structurally Significant Item (SSI) given in SRM 51-00-4, Fig. 3. Thus, no change to the Supplemental Structural Inspection Document (SSID) inspection program is necessary.

WARNING: SOME EQUIPMENT USED FOR HEAT CURING REPAIRS MAY CONSTITUTE A FIRE OR EXPLOSION HAZARD WHEN USED IN THE VICINITY OF AN AIRPLANE WHICH CONTAINS, OR HAS CONTAINED FUEL. CONSULT THE LOCAL FIRE DEPARTMENT FOR AUTHORITY TO USE SPECIFIC EQUIPMENT. NONCOMPLIANCE COULD CAUSE PERSONNEL INJURY.

BREATHING VAPORS OR ALLOWING SOLVENT TO CONTACT SKIN OR EYES IS HAZARDOUS. WEAR NEOPRENE GLOVES WITH COTTON LINERS, PROTECTIVE CLOTHING, AND EYE GOGGLES. IF CHEMICAL CONTACT OCCURS, WASH THOROUGHLY WITH WATER. IF CHEMICAL SHOULD SPLASH INTO EYES, FLUSH EYES WITH LARGE QUANTITIES OF WATER AND SEEK MEDICAL AID. USE MECHANICAL VENTILATION OR RESPIRATORY PROTECTION WHEN WORKING IN A CONFINED SPACE OR AREA.

DO NOT BREATHE CARBON FIBER DUST. MAKE SURE THAT THERE IS A GOOD FLOW OF AIR WHERE YOU DO THE WORK. USE EQUIPMENT TO HELP YOU BREATHE WHEN YOU WORK IN A CONFINED SPACE. USE A VACUUM NEAR THE SOURCE OF THE DUST TO REMOVE THE DUST FROM THE AIR. IF YOU DO NOT OBEY, YOU CAN CAUSE INJURY.

CAUTION: FASTENERS INSTALLED IN GRAPHITE COMPOSITE STRUCTURE MUST BE BARE OR BMS 10-85 COATED TITANIUM, OR CORROSION RESISTANT STEEL. CADMIUM PLATED CORROSION RESISTANT STEEL MAY ALSO BE USED. ALUMINUM OR ALLOY STEEL FASTENERS ARE NOT ALLOWED IN GRAPHITE COMPOSITE STRUCTURES

WHEN REINSTALLING ALUMINUM FITTINGS ON GRAPHITE COMPOSITE STRUCTURE, ENSURE THAT THE ORIGINAL CORROSION PROTECTIVE TREATMENT IS MAINTAINED. INSTALL FITTINGS WITH FAYING SURFACE SEAL USING BMS 5-26 IN FUEL TANK AREAS OR BMS 5-95 IN ALL OTHER AREAS.

DO NOT LET CARBON FIBER DUST GO INTO ELECTRICAL EQUIPMENT. CARBON FIBER DUST IS ELECTRICALLY CONDUCTIVE AND IT CAN CAUSE SHORT CIRCUITS IF IT GOES INTO ELECTRICAL EQUIPMENT. USE A VACUUM NEAR THE SOURCE OF THE DUST TO REMOVE THE DUST FROM THE AIR. IF YOU DO NOT OBEY, YOU CAN CAUSE DAMAGE TO THE ELECTRICAL EQUIPMENT.

BOEING PROPRIETARY - Copyright © - Unpublished Work - See title page for details.

B. This subject contains repairs to components made from epoxy resin reinforced with several layers of graphite tape or fabric, aramid fabric, or a combination of graphite tape or fabric, aramid fabric, or glass fabric (hybrids). The most common construction is a sandwich of two laminated skins separated by a nonmetallic honeycomb core. Solid laminate is used for small components, honeycomb panel edgebands, some primary and secondary structure, and at fitting locations. Glass fabric is also known as fiberglass cloth. This subject describes repairs made using 350°F (177°C) cure materials (prepreg layup).

CAUTION. TO GET AN ACCEPTABLE QUALITY REPAIR, DO AS FOLLOWS:

- REFER TO THE APPLICABLE COMPONENT WHICH YOU ARE GOING TO REPAIR FOR THE REPAIR LIMITS AND MATERIAL OF THE COMPONENT BEFORE YOU USE THESE REPAIR INSTRUCTIONS.
- USE THE CORRECT MATERIALS FOR THE TYPE OF COMPONENT AND REPAIR THAT IS MADE.
- USE THE MATERIALS THAT AGREE WITH THE SPECIFICATIONS IN THE SRM.
- ACCURATELY FOLLOW THE SRM PROCEDURES AT EACH STEP OF THE REPAIR. IF YOU DO NOT DO THIS, IT CAN CAUSE A REPAIR THAT IS NOT SATISFACTORY AND NOT APPROVED.

350°F (177°C) CURE REPAIRS ARE RESTRICTED TO SPECIFIC COMPONENTS.

350°F (177°C) TEMPERATURE MUST NOT BE APPLIED TO AREAS SEALED WITH BMS 5-26 OR BMS 5-95 SEALANT UNLESS SEALANT CAN BE REPLACED FOLLOWING THE REPAIR.

C. Specific allowable damage, repair limitations, and repair data, can be found in the chapter/section/subject associated with each structural component.

D. Use suitable holding fixtures for large repairs to prevent distortion of the structure.

E. Perform the repair procedure specified herein only in areas of reasonable cleanliness. Areas containing oil mist, exhaust fumes, gases, soot, rain, dust, or other particulate matter are specifically prohibited.

F. Protect surfaces from contamination. Do not touch cleaned parts or adhesive with bare hands Use clean white gloves when handling parts.

G. Store BMS 5-90 foaming adhesive below 0°F (-18°C). Store BMS 5-154 adhesive film below 10°F (-12°C). Store BMS 8-212, BMS 8-256, and BMS 8-289 prepreg materials below 10°F (-12°C) Store BMS 8-139 and BMS 8-218 prepreg materials below 40°F (4°C). Store all materials in sealed moisture proof bags. An identification label must accompany the material inside the bag with the following information: BMS Type, Class, grade, supplier name, batch number, roll number, prepreg lot number and date of preparation. Record stowage time in and out of refrigeration.

BOEING PROPRIETARY - Copyright © - Unpublished Work - See title page for details.

H. Store resin mix 1, BMS 5-25 adhesive, and BMS 5-92 adhesive at 40°F (4°C) to 80°F (27°C) in sealed containers. An identification label must accompany the material inside the container with the following information: BMS Type, class, grade, supplier name, batch number, and date of preparation.

I. Refer to SRM 51-20-00 for source of repair materials and equipment.

J. Refer to SRM 51-10-7 for hole drilling and machining of composite structure.

K Refer to SRM 51-70 for aerodynamic smoothness requirements.

L. See Fig. 1 for repair index.

M. See Fig. 2 for resin mixes, adhesives, and prepreg materials.

BOEING PROPRIETARY - Copyright © - Unpublished Work - See title page for details.

2. Repair Procedures Common to Various Repairs

A. Determine Damage

CAUTION: DO NOT USE CHEMICAL PAINT STRIPPERS TO REMOVE PAINT BEFORE MAKING DAMAGE EVALUATIONS. DAMAGE TO THE ADHESIVE RESIN SYSTEM WILL OCCUR.

(1) Examine visually for extent of damage.

(2) Check part in vicinity of damage for entry of water, oil, fuel, dirt or other foreign matter. Water can be detected by radiographic or thermographic methods. Remove contaminants. Refer to par. 2.B. for water removal instructions.

(3) Check for delamination around the damage.

NOTE: Delamination can be detected by instrumental nondestructive inspection (NDI) methods or by tap test. For the tap test, use a solid metal disk and tap the repair area lightly, but firmly. Void areas will give a dull sound. Solidly bonded areas will give a sharp ring. Refer to Part 1 of the Nondestructive Test Manual.

B. Remove Water from Damaged Area

(1) Remove water from honeycomb sandwich (Fig. 3).

(a) Remove damaged skin plies to open up honeycomb area in the damaged area. Remove standing water using vacuum or oil-free compressed air.

(b) Sand the core to remove the adhesive. Removal of adhesive fillets on core is not required.

(c) Apply screen over exposed core.

(d) Apply a thermocouple to the center of the screen.

(e) When opposite face is accessible, apply thermocouple to the opposite side of honeycomb sandwich panel.

(f) When opposite face is accessible, apply a heat blanket to opposite side of honeycomb sandwich panel.

NOTE: When opposite face is accessible, it is acceptable to heat the area using a heat blanket only on the opposite face. An additional heat blanket may be used on the near face at the location shown in Fig. 3. The additional heat blanket accelerates water removal. When opposite face is inaccessible, use of heat blanket on the near side is required.

2.B.(1) (g) When opposite face is inaccessible or when using an additional heat blanket, perform the following steps:

1) Apply a layer of glass fabric bleeder cloth over the screen and hold in place with masking tape.

2) Apply a thermocouple to the center of the bleeder cloth. Place a vacuum line on the edge of the bleeder cloth and hold in place with masking tape.

3) Place the heat blanket over the bleeder cloth.

(h) Place extruded sealing compound around the entire area and seal the area with vacuum bag material.

(i) Evacuate the layup to a minimum 22 inches of mercury vacuum.

(j) Heat the area for 1 hour minimum at 150°F (66°C) to 170°F (77°C). The rate of temperature rise must not exceed 5°F (3°C) per minute.

(k) Remove layup materials and proceed with repair procedure.

(2) Remove water from solid laminate.

(a) Remove damage and/or delaminated skin. Remove standing water using vacuum or oil-free compressed air.

(b) Heat the area for 1 hour minimum at 150°F (66°C) to 170°F (77°C). The rate of temperature rise must not exceed 5°F (3°C) per minute.

C. Remove and Prepare Damaged Area

(1) Damage removal.

(a) Trim out the damaged lamination to a smooth shape with rounded corners, or a circular or oval shape. Take care not to damage the undamaged plies, core, or surrounding material.

NOTE: Remove only damaged plies, damaged doublers, and damaged fillers.

2.C.(1) (b) When the core is also damaged, remove the core by trimming to the same outline as the skin. The core area removed should extend at least 0.50 inch further than the visible core damage limits. Take care to avoid cutting into an undamaged skin on the opposite side. In cores greater than 1.0 inch thick, partially remove core (at least 0.5 inch deep) sufficient to clean up damage.

(c) In areas where contamination cannot be removed by cleaning or drying per par. 2.B., remove the contaminated structure along with the other damage.

(d) When opposite inner skin is also damaged, trim out the damage to a smooth shape as described in par. 2.C.(1)(a).

(e) When core is removed from the inner surface of opposite skin, carefully smooth core down to adhesive film.

(f) Inspect cut out area to ensure that all damage has been removed.

CAUTION: SANDING FOR ADHESION OR FINISH REMOVAL MUST NOT EXPOSE OR DAMAGE FILAMENTS IN THE UNTAPERED SURFACE REPAIR AREA.

SANDING MUST NOT EXPOSE OR DAMAGE FILAMENTS IN EACH PLY WHEN STEP SANDING OR IN THE PLY BONDED TO THE CORE (FIG. 4).

LOSS OF STRUCTURAL STRENGTH OF THE COMPONENT WILL OCCUR IF THESE CAUTIONS ARE NOT OBSERVED.

DO NOT USE PAINT STRIPPERS FOR THE REMOVAL OF FINISH. DAMAGE TO THE ADHESIVE RESIN SYSTEM WILL OCCUR.

(2) Preparation of damaged area (Fig. 4).

(a) Determine the number of plies that have been cut. Mask off the area around the cleaned up damage allowing 0.50-inch overlap for each ply replacement, plus 0.50 inch extra for each extra repair ply to ensure that the existing top ply is completely covered by the repair.

NOTE: Where the number of plies is not apparent, refer to the applicable structure identification or engineering drawing.

WARNING: SANDING GIVES OFF A FINE DUST THAT MAY CAUSE SKIN IRRITATIONS. BREATHING OF AN EXCESSIVE AMOUNT OF THIS DUST MAY BE INJURIOUS. OBSERVE PRECAUTIONS FOR SKIN AND RESPIRATION PROTECTION.

AIR-POWERED EQUIPMENT MUST BE USED WHERE THE POSSIBILITY OF VAPOR IGNITION EXISTS. NONCOMPLIANCE COULD CAUSE PERSONNEL INJURY.

2.C.(2) (b) Internal surface of part (nonaerodynamic surface) and noncritical aerodynamic surfaces.

1) Remove the paint finish or tedlar film in the masked off area using No. 240 or finer Scotch-Brite abrasive, or No. 150 or finer sandpaper.

2) If the damaged area has a layer of aluminum foil, cut back the foil enough to allow a new foil layer to have a 1.0 inch minimum overlap beyond the outermost repair ply (Fig. 18).

3) Taper sand or step sand each ply around the cleaned up damage using No. 80 sandpaper. Taper or step sand each ply a minimum of 0.50 inch per ply (Fig. 4).

4) An optional procedure for two or three ply laminate face sheets is to fill the cleaned up damage area flush with the original surface using filler plies during the repair layup. The repair plies are then installed directly on the resulting smooth surface of the repair area.

5) Abrade surfaces around repair using No. 240 or finer, Scotch-Brite abrasive.

(c) External surface of part (critical aerodynamic surfaces).

1) Taper sand a uniform taper around the cleaned up damage using No. 80 sandpaper. The taper is to be over a minimum distance of 0.50 inch for each existing ply of the laminate. As an option on sandwich structure, step sanding per par. 2.C.(2)(b)2) may be used instead of taper sanding. Refer to 51-70 for locations of areas of critical aerodynamic smoothness. Taper sanding must always be used on solid laminate structures (Fig. 4).

NOTE: For sanding, use a flexible disk sander, a belt sander, a rotating pad sander, or sand by hand.

2) Remove exterior finishes, including enamel finish and conductive coating, from the surfaces around repair using No. 150 or finer sandpaper.

2.C.(2) (d) Edgeband of panel.

1) Taper sand panel edgeband according to par. 2.C.(2)(c).

NOTE: Edgeband is the solid laminate around the outer periphery of the honeycomb panel.

(e) Cleaning of repair area.

1) Remove all sanding dust using oil-free compressed air.

WARNING: KEEP SOLVENTS AWAY FROM SOURCES OF HEAT, FIRE, OR SPARKS. HEAT, FIRE, OR SPARKS CAN CAUSE AN EXPLOSION.

AVOID CONTACT OF SOLVENT WITH SKIN, EYES, AND CLOTHING. WEAR EYE PROTECTION AND USE MECHANICAL VENTILATION OR RESPIRATORY PROTECTION WHEN WORKING IN A CONFINED SPACE OR AREA. BREATHING VAPORS OF ALLOWING SOLVENT TO CONTACT SKIN OR EYES IS HAZARDOUS.

CAUTION: DO NOT IMMERSE PARTS IN TRICHLOROETHANE SOLVENT OR ALLOW STANDING SOLVENT ON PART. DAMAGE TO PART WILL OCCUR.

2) Wipe surfaces with a clean cloth moistened with MIBK (methyl isobutyl ketone), MEK (methyl ethyl ketone), or acetone. Allow solvent to evaporate before proceeding with the repair.

D. Fabricate, Clean and Install Honeycomb Replacement Core Plug

(1) Fabricate core plug.

(a) Fabricate core plug. Refer to specific component structural identification subject to determine type of core called out on engineering drawing.

(b) For butt splicing, the honeycomb core plug should fit flush with original core and with ribbon direction the same as in original core. The replacement core must overlap and make intimate contact with the cell walls of surrounding core material.

(c) Trim core plug to full or partial depth of original core (par. 2.C.(1)(b)).

NOTE: When applicable, depth of core plug should allow for shrinkage during cure and for thickness of extra plies of fabric cloth and adhesive film between core plug and undamaged core or skin.

(2) Clean core plug.

WARNING: KEEP SOLVENTS AWAY FROM SOURCES OF HEAT, FIRE, OR SPARKS. HEAT, FIRE, OR SPARKS CAN CAUSE AN EXPLOSION.

AVOID CONTACT OF SOLVENT WITH SKIN, EYES, AND CLOTHING. WEAR EYE PROTECTION AND USE MECHANICAL VENTILATION OR RESPIRATORY PROTECTION WHEN WORKING IN A CONFINED SPACE OR AREA. BREATHING VAPORS OR ALLOWING SOLVENT TO CONTACT SKIN OR EYES IS HAZARDOUS.

CAUTION: DO NOT EXCEED IMMERSION CRITERIA GIVEN IN PAR. 2.D.(2)(a). DAMAGE TO CORE MATERIAL WILL OCCUR.

DO NOT IMMERSE PARTS IN TRICHLOROETHANE SOLVENT OR ALLOW STANDING SOLVENT ON PART. DAMAGE TO PART WILL OCCUR.

(a) Clean visually contaminated core by dipping (a maximum of four times) in MIBK, MEK or acetone bath for 60 seconds.

(b) Locally contaminated areas can be washed with MIBK, MEK or acetone.

(c) The core must be completely dry, clean and free of evidence of solvents before installation.

CAUTION: DO NOT TOUCH THE ADHESIVE FILM, FOAMING ADHESIVE, OR PREIMPREGNATED MATERIALS WITH BARE HANDS OR OTHER PARTS OF THE BODY. WEAR CLEAN WHITE GLOVES WHEN HANDLING THESE MATERIALS. THESE MATERIALS MUST REMAIN FREE OF CONTAMINATION DURING CUTTING AND HANDLING.

DO NOT FOLD, STRETCH, OR OTHERWISE THIN THE ADHESIVE FILM. NONCOMPLIANCE WILL AFFECT THE QUALITY OF THE ADHESIVE.

ENSURE THAT THE SEPARATOR FILMS ARE REMOVED FROM THE ADHESIVE FILM, FOAMING ADHESIVE, AND PREIMPREGNATED MATERIALS PRIOR TO LAYUP AND CURING. NONCOMPLIANCE WILL RESULT IN A RUINED REPAIR.

2.D.(3) Install core plug.

NOTE: Before opening the adhesive film, foaming adhesive, or preimpregnated material wrappers, condition them to room temperature until moisture no longer condenses on the wrapper.

During use, suspend the rolls of adhesive or preimpregnated material horizontally through their axes free from other rolls or objects.

The following procedure is based on the core plug installation being cured separately from the repair plies. As an option, the core plug installation and the repair plies may be cured at the same time if the far side skin is accessible to place thermocouples and a heat blanket on it.

(a) For partial core replacement, perform the following steps:

1) Cut two plies of BMS 5-154, Type II, Class 1, Grade 05 adhesive film to fit the core cavity.

2) Cut one piece of BMS 8-139, Type 120 glass fabric to fit the core cavity.

3) Remove the separator film from one ply of adhesive film and place the adhesive film into the core cavity.

4) Remove the separator film from the glass fabric and place the glass fabric into the core cavity.

5) Remove the separator film from the second ply of adhesive film and place the adhesive film into the core cavity.

2. D. (3) (b) For full depth core replacement where damage does not extend through both skins, perform the following steps:

1) Cut one ply of BMS 5-154, Type II, Class 1, Grade 05 adhesive film to fit the core cavity.

2) Remove the separator film from the adhesive film and place the adhesive film into the core cavity.

(c) If both skins are damaged, apply a caul plate against the exterior surface of the far side skin and tape in place.

(d) If the replacement core plug is being cured separately from the repair plies, place thermocouples at all adhesive bond lines.

(e) Cut a piece of BMS 5-90, Type III, Class 350, Grade 50 foaming adhesive to wrap around the replacement core plug.

(f) Remove the separator film from the foaming adhesive, wrap the adhesive around the replacement core plug, and install into the core cavity. Orient the ribbon direction to align with the original core ribbon.

(g) Put the layup materials and equipment in place per Fig. 5. If damage extends through both skins, put layup materials and equipment on both sides of part using the layup shown in Fig. 5.

(h) Evacuate the repair area to a vacuum of 22 inches of mercury minimum.

NOTE: Maintain a vacuum of 22 inches of mercury minimum during the entire cure cycle.

(i) Check the vacuum bag for leaks.

(j) Cure per Fig. 8. Determination of the temperature must be made using the thermocouples placed at the adhesive bond line. Determine cure temperature from the thermocouple with the lowest reading.

(k) Allow the repair area to cool under vacuum until the temperature of the repair area is 140°F (60°C) or less. Then remove layup materials and equipment.

2.D.(3) (l) Sand replacement core plug approximately flush with surrounding materials, making allowance for adhesive film and slight core crush during cure of repair plies.

(m) Remove all sanding dust using oil-free compressed air.

CAUTION: DO NOT TOUCH THE ADHESIVE FILM OR PREIMPREGNATED MATERIALS WITH BARE HANDS OR OTHER PARTS OF THE BODY. WEAR CLEAN WHITE GLOVES WHEN HANDLING THESE MATERIALS. THESE MATERIALS MUST REMAIN FREE OF CONTAMINATION DURING CUTTING AND HANDLING.

DO NOT FOLD, STRETCH, OR OTHERWISE THIN THE ADHESIVE FILM. NONCOMPLIANCE WILL AFFECT THE QUALITY OF THE ADHESIVE.

CAUTION: USE OF PRECURED PATCHES IS NOT RECOMMENDED. PRECURED PATCHES BONDED TO THE STRUCTURE UNDER VACUUM PRESSURE ONLY AND LARGE PRECURED PATCHES BONDED TO CONTOURED SURFACES CAN RESULT IN POROUS OR NONCONTINUOUS BONDLINES.

E. Prepare and Apply Repair Plies

NOTE: Before opening the adhesive film or preimpregnated material wrappers, condition them to room temperature until moisture no longer condenses on the wrapper.

During use, suspend the rolls of adhesive or preimpregnated material horizontally through their axes free from other rolls or objects.

(1) Prepare repair plies.

(a) Refer to the specific component structure identification to determine the number, orientation, and material of plies used in the original structure.

(b) See Fig. 6 for repair ply material and substitution of repair ply material. No substitutes are permitted for graphite fabric repair plies.

(c) Refer to the specific component structure repair subject for extra repair ply requirements.

(d) See Fig. 7 for extra repair ply material.

(e) See Fig. 4 for overlap requirements.

2. E. (1) (f) From each type of material required, cut the required number of plies for the repair patch. In the patch, use one repair ply of fabric for each damaged ply of fabric in the original laminate, use the number of graphite fabric repair plies required per Fig. 6 for each damaged ply of graphite tape in the original laminate, plus extra repair plies as specified in the specific component structural repair subject. If extra repair plies are not specified in the specific component structural repair subject, one extra repair ply is required per Fig. 7. Each repair ply must have the same orientation as the corresponding original ply being replaced. When repairing graphite tape with graphite fabric, see Fig. 6 for repair ply orientation. The orientation of the outermost extra repair ply is to be ± 45° with respect to the ply orientation convention given in the specific component structural identification. The orientation of the inner extra ply (if required) is to be 0° or 90° with respect to the ply orientation convention given in the specific component structural identification. If a filler ply is required, use the same material as adjacent repair ply and orientation is optional.

CAUTION: ENSURE THAT THE SEPARATOR FILMS ARE REMOVED FROM THE ADHESIVE FILM AND PREIMPREGNATED MATERIALS PRIOR TO LAYUP AND CURING. NONCOMPLIANCE WILL RESULT IN A RUINED REPAIR.

(2) Apply repair piles.

NOTE: Where the damage has occurred at a lap joint in the original laminates, it is not necessary to make a comparable lap in the repair plies. Where the original core was undamaged and was provided with a recess to match the lap joint, the recess should be filled with filler plies before application of the repair plies.

(a) Cut two plies of BMS 5-154, Type II, Class 1, Grade 05 adhesive film 1/8 inch larger than the outermost extra repair ply.

(b) Remove the separator film from one ply of adhesive film and place the adhesive film over the repair area.

(c) Starting with the smallest repair ply, remove the separator film from each repair ply and place the repair ply against the repair area with the proper orientation and with overlap all around per Fig. 4.

2.E.(2) (d) Remove the separator film from the second ply of adhesive film and place the adhesive film over the repair plies.

(e) If the repair area has a layer of aluminum foil (BMS 8-289), repair the aluminum foil per par. 3.M.

F. Layup/Bagging Procedure (Fig. 5)

(1) Place a layer of perforated FEP parting film (1 mil thick) over the repair. Cut the FEP so that the edges extend 3 inches beyond the edge of the repair patch.

(2) Secure three thermocouples (spaced evenly around repair) to the panel at the edge of the repair and secure them to the appropriate recorders.

(3) Place a layer of dry peel ply or Style 120 glass fabric (or equivalent thickness glass fabric) over the perforated FEP as a surface bleeder. Cut the surface bleeder so that the edges extend 2 inches beyond the edge of the perforated FEP.

(4) Place a layer of solid FEP parting film (2 mil thick) over the surface bleeder. Cut the solid FEP so that the edges are even with the edge of the perforated FEP.

(5) Place a layer of Airwave SS or Style 120 glass fabric over the solid FEP as a surface breather. Cut the surface breather so that the edges extend to the edge of the surface bleeder. Make certain the surface breather makes contact with the surface bleeder along the edges.

(6) Secure a vacuum line on the edge of the surface breather.

WARNING: USE HEAT CURING EQUIPMENT THAT IS ACCEPTABLE TO LOCAL FIRE PROTECTION AUTHORITIES. FAILURE TO COMPLY COULD CAUSE PERSONNEL INJURY.

(7) Place a heat blanket over the surface breather. The heat blanket must extend a minimum of 2 inches beyond the repair patch edges.

NOTE: When using a heat blanket larger than 12 inches on one side, an aluminum caul plate (0.016 inch thick) can be used under the heat blanket to minimize localized heating. Make the caul plate slightly smaller than the surface breather.

If the repair is made on a structure too small to allow the heat blanket to be vacuum bagged, proceed to step (10) and place heat blanket over the vacuum bag.

2. F. (8) Place controlling thermocouple over the center of the heat blanket.

(9) Place 4 to 6 layers of glass fabric over the heat blanket. The glass fabric will insulate the heat blanket and prevent damage to the bagging film.

(10) Apply extruded sealing compound around the entire repair area, approximately 6 inches outside the edge of the heat blanket.

(11) Lay a piece of vacuum bag material over the entire repair area, sealing the edge with the extruded sealing compound. Pleat the vacuum bag where needed to prevent bridging of bag material and subsequent bag breakage. Pad all sharp objects and corners to prevent bag breakage. It is optional to vacuum bag the entire part.

NOTE: The entire part must be vacuum bagged and restrained in place to prevent delamination and distortion when the repair area exceeds 15% of panel area. Regardless of the method of heat application, restraining devices that maintain the contour and support the part must be used for large parts where sagging and distortion could occur due to the weight of the part.

(12) Evacuate the space under the vacuum bag and maintain a vacuum of 22 inches of mercury minimum.

NOTE: Maintain a vacuum of 22 inches of mercury minimum during entire cure cycle.

(13) Check the vacuum bag for leak paths.

(14) If the replacement core plug is being cured at the same time as the repair plies, place thermocouples on the far side skin or caul plate opposite the repair area. Place a heat blanket and vacuum line on the far side skin and repeat steps (8) through (13) above.

WARNING: USE HEAT CURING EQUIPMENT THAT IS ACCEPTABLE TO LOCAL FIRE PROTECTION AUTHORITIES. NONCOMPLIANCE COULD CAUSE PERSONNEL INJURY.

CAUTION: SURFACE TEMPERATURE MUST NOT EXCEED 365°F (185°C). DAMAGE OR DISTORTION OF STRUCTURE MAY OCCUR IF TEMPERATURE EXCEEDS 365°F (185°C).

2. G. Cure the Repair (Fig. 8)

NOTE: When using a hot bond console, consult the manufacturer's operating instructions.

Maintain a vacuum of 22 inches of mercury minimum during the entire cure cycle.

Determination of the temperature must be made using the thermocouples placed at the edge of the repair patch and, if applicable, on the far side skin. Use the thermocouple with the lowest reading to determine the cure temperature.

(1) Raise the temperature at a rate of 1°F to 5°F (1°C to 3°C) per minute to a temperature of 345°F to 365°F (174°C to 185°C).

(2) Cure at 345°F to 365°F (174°C to 185°C) for 120 to 180 minutes.

NOTE: Cure time does not include the time required for the mold and part to heat up to temperature. Cure time is the period after the part has reached that temperature.

(3) Cool down at a rate of 5°F (3°C) per minute maximum.

(4) When the repair area has cooled to less than 140°F (60°C), release the vacuum pressure and remove the layup and bagging materials.

H. Refinish after Repair

CAUTION: DO NOT SAND INTO ORIGINAL STRUCTURE. FAILURE TO COMPLY WILL REDUCE THE STRENGTH OF THE COMPONENT.

(1) Lightly sand edge of topmost repair ply as necessary to fair the edge. Sand surface of repair to produce a smooth finish without damaging fibers. Omit this step if the topmost ply is aluminum foil (BMS 8-289).

(2) Apply finish to the repaired surface using the following applicable methods.

(a) Where clear Tedlar film surfaces have been removed, seal with a brush coat of Resin Mix 1 (Fig. 2). Cure per Fig. 2.

BOEING PROPRIETARY - Copyright © - Unpublished Work - See title page for details.

(b) Where grey or white Tedlar film surfaces have been removed, seal with Resin Mix 1 (Fig. 2). Cure per Fig. 2 and apply one coat of BMS 10-11 primer and one coat of BMS 10-60 enamel (grey, BAC705; white, BAC7106).

(c) Where conductive surfaces have been removed, apply conductive finish according to Chapter 51 of the Maintenance Manual.

(d) Where the abrasion resistant teflon finish has been removed from the internal surface of the panel edgeband, reapply the finish according to Chapter 51 of the Maintenance Manual.

(e) Where the original painted surfaces have been removed, restore original finish according to Chapter 51 of the Maintenance Manual.

(f) Where sealant has been removed from around fittings or fay surfaces to facilitate repairs, reapply BMS 5-26 in fuel tank areas or BMS 5-95 in all other areas per drawing requirements or 51-10-2.

(g) Where aluminum flame sprayed areas have been damaged, repair per 51-40-9.

(h) Where aluminum coated glass fabric (BMS 8-278) has been repaired, aluminum flame spray per 51-40-9.

(i) Where repairs have been made to the exterior surfaces of panels containing aramid, apply sealant to the exterior surfaces per 51-20-04.

I. Perform Post Repair Requirements

(1) Make an inspection of the repair that was done to make sure that the repair is satisfactory. The inspection must include these areas:

- The area that was hot.

- A minimum width of 2 inches all around the area that was hot.

If a defective repair is indicated by the inspection, remove and install the repair again.

NOTE: Post repair inspection is recommended. Examples of inspection procedures are given in NDT Manual Part 1, 51-01-01. Other inspection methods that have been examined and found satisfactory by the airline can be used.

BOEING PROPRIETARY - Copyright © - Unpublished Work - See title page for details.

WARNING: FLIGHT SAFETY DEMANDS THAT CERTAIN CONTROL SURFACES BE PROPERLY BALANCED AT ALL TIMES.

2. I. (2) Following repair of control surface, balance must be checked to determine whether or not rebalancing is required. Rebalance as necessary per 51-80-00.

CAUTION: REPAIRS MADE TO CONTROL SURFACES AND/OR ADJACENT STRUCTURE MUST NOT INTERFERE WITH THE DESIGNED OPERATION OF THE CONTROL SURFACES. DAMAGE TO AIRPLANE STRUCTURE MAY OCCUR.

(3) Check all repairs for noninterference with operation of control surfaces. Ensure adequate clearances for all repaired parts.

CAUTION: REPAIRS MUST NOT COVER EXISTING DRAIN HOLES IN PANELS. WATER WILL ACCUMULATE IF DRAIN HOLES ARE COVERED.

(4) If the repair covers a drain hole, drill through the repair at existing location.

NOTE: Drain holes are usually 0.375-inch diameter (Ref Chapter 51, Maintenance Manual).

CAUTION: TO GET AN ACCEPTABLE QUALITY REPAIR, DO AS FOLLOWS:

- REFER TO THE APPLICABLE COMPONENT WHICH YOU ARE GOING TO REPAIR FOR THE REPAIR LIMITS AND MATERIAL OF THE COMPONENT BEFORE YOU USE THESE REPAIR INSTRUCTIONS.
- USE THE CORRECT MATERIALS FOR THE TYPE OF COMPONENT AND REPAIR THAT IS MADE.
- USE THE MATERIALS THAT AGREE WITH THE SPECIFICATIONS IN THE SRM.
- ACCURATELY FOLLOW THE SRM PROCEDURES AT EACH STEP OF THE REPAIR. IF YOU DO NOT DO THIS, IT CAN CAUSE A REPAIR THAT IS NOT SATISFACTORY AND NOT APPROVED.

3. Typical Repairs

NOTE: These repairs apply to all 350°F (177°C) cure graphite, aramid, and graphite/aramid/glass hybrid reinforced laminates and nonmetallic honeycomb sandwich components except radomes and floor panels.

See Fig. 1 for repair index.

A. Repair 1 - Repair of Damage to One Skin of Honeycomb Panel (Fig. 10)

(1) Determine damage per par. 2.A. Ensure that water and other contaminations are removed per par. 2.B.

(2) Cut away damaged plies per par. 2.C.(1). Do not remove any core.

(3) Prepare damaged area per par. 2.C.(2).

(4) Prepare and apply repair plies per par. 2.E.

(5) Apply vacuum and cure per par. 2.F. and 2.G.

(6) Refinish the repair area per par. 2.H.

(7) Perform applicable post-repair requirements per par. 2.I. before returning the repaired component to flight service.

B. Repair 2 - Repair of Damage, 0.50-inch Diameter or less, to One Skin and Honeycomb Core

(1) Repair this type of damage per Repair 2 of 51-40-12.

3. C. Repair 3 - Repair of Damage, Greater than 0.50-inch Diameter, to One Skin and Honeycomb Core (Fig. 11)

(1) Determine extent of damage according to par. 2.A.

(2) Remove all contamination and water from damaged area per par. 2.B. Area must be completely dried out.

(3) Remove damage and prepare area according to par. 2.C.

(4) Fabricate, clean, and install honeycomb replacement core plug per par. 2.D.

(5) Clean surface according to par. 2.C.(2)(e).

(6) Prepare and apply repair plies according to par. 2.E.

(7) Bag repair and cure according to par. 2.F. and 2.G.

(8) Refinish the repair according to par. 2.H.

(9) Perform applicable post-repair requirements per par. 2.I. before returning the repaired component to flight service.

D. Repair 4 - Repair of Damage to Both Skins and Honeycomb Core (Fig. 12)

(1) Determine extent of damage according to par. 2.A.

(2) Remove all contamination and water from damaged area per par. 2.B. Area must be completely dried out.

(3) Remove damage and prepare area according to par. 2.C.

(4) Fabricate, clean, and install honeycomb replacement core plug per par. 2.D., except it is not necessary to vacuum bag the core plug installation at this time.

(5) Prepare and apply repair plies to one surface of the panel according to par. 2.E. A caul plate may be used on the opposite face of the panel to restrain the core plug in place.

(6) Bag repair and cure according to par. 2.F. and 2.G. Ensure that temperature is approximately equal on both sides of panel.

(7) Sand core plug approximately flush with surrounding material, making allowance for slight core crush during cure.

(8) Clean surface according to par. 2.C.(2)(e).

(9) Prepare and apply repair plies to the other surface of the panel according to par. 2.E.

(10) Bag repair and cure according to par. 2.F. and 2.G.

3. D. (11) Refinish the repair according to par. 2.H.

(12) Perform applicable post-repair requirements per par. 2.I. before returning the repaired component to flight service.

NOTE: The above two-stage cure procedure is recommended. As an option, a three-stage cure procedure may be used wherein the core plug installation and the repair plies on each side may be cured separately.

E. Repair 5 - Repair of Damage to Honeycomb Panel Where Access is Limited to One Side (Fig. 13)

NOTE: This repair applies to flat panels (or nearly flat panels) where damage extends completely through a panel, but access is not readily available to repair the unexposed side.

(1) Determine extent of damage according to par. 2.A.

(2) Remove all contamination and water from damaged area per par. 2.B. Area must be completely dried out.

(3) Remove damage and prepare area according to par. 2.C. and the following:

(a) Enlarge the hole in the outer skin and core (D diameter) to permit a repair to be made to the inner skin with the required overlap.

NOTE: D diameter = d + N + 1
d = major diameter of the oval hole in the inner skin
N = number of plies in the inner skin.

Stepping of the plies in the inner skin is not allowed for this repair.

(b) Cut the damaged area in the inner skin to an oval shaped hole.

NOTE: The major diameter of the oval hole must be large enough for the minor diameter of the oval patch to fit through. The minor diameter of the oval hole must be large enough to maneuver the patch and spring steel assembly through.

3. E. (4) Fabricate an airtight patch to cover the oval hole in the inner skin from the inaccessible side.

(a) Make a suitable mold on which to lay up the patch. A thin gauge aluminum sheet on any smooth surface cam be used as a mold

(b) Cover the mold with parting film or a release agent.

(c) Cut five plies of 350°F cure prepreg material. The type of material and orientation is optional. The diameter of the plies is to be at least equal to the D diameter.

CAUTION: ENSURE THAT THE SEPARATOR FILMS ARE REMOVED FROM THE PREIMPREGNATED MATERIALS PRIOR TO LAYUP AND CURING. NONCOMPLIANCE WILL RESULT IN A RUINED REPAIR.

(d) Remove the separator films and lay up the five plies of prepreg material on the mold.

(e) Bag and cure the patch according to par. 2.F. and 2.G.

(f) Remove the patch from the mold.

(g) Trim the patch to an oval shape that will overlap the oval hole in the inner skin by 0.25 inch minimum.

(h) Drill an 1/8 inch diameter hole in the center of the patch.

(i) Abrade the surface of the patch that will bond to the inner skin using No. 240 or finer Scotch-Brite abrasive.

(j) Remove all sanding dust using oil-free compressed air.

(k) Fabricate a strip of spring steel 1.0 x 10.0 inches and drill a 1/8 inch diameter hole in the center.

(l) Assemble the patch and spring steel using a 1/8 inch diameter cleco fastener.

3. E. (5) Remove Tedlar, if required, and abrade the underside of the inner skin to a distance of 0.38 inch from the edge of the oval hole using No. 180 or finer sandpaper. Do not damage the existing ply filaments.

(6) Clean the surface according to par. 2.C.(a)(e).

(7) Bend up both ends of the spring steel and apply BMS 5-25, Type II, Grade 1 adhesive or BMS 5-92, Type I adhesive to the patch.

(8) Hold the spring steel up, insert the patch into the oval hole, and orientate the patch so that the hole is covered. Release the spring steel so that it holds the patch tightly up against the inner skin.

(9) Cure the adhesive per Fig. 2.

(10) Remove the cleco fastener and spring steel. Fill the hole in the patch with BMS 5-25, Type II, Grade 1 adhesive, BMS 5-92, Type I adhesive, or BMS 5-95, Class B-1/2 sealant and allow to cure.

NOTE: Cure BMS 5-25 and BMS 5-92 per Fig. 2. Cure BMS 5-95 for 20 hours at 77°F ±2° (25°C ±1°).

(11) Clean the repair area according to par. 2.C.(2(e).

(12) Prepare the repair plies for the inner skin per par. 2.E.(1). All plies are to have a diameter of D.

(13) Cut two plies of BMS 5-154, Type II, Class 1, Grade 05 adhesive film 0.10 inch larger than diameter D.

CAUTION: ENSURE THAT THE SEPARATOR FILMS ARE REMOVED FROM THE ADHESIVE FILM AND PREIMPREGNATED MATERIALS PRIOR TO LAYUP AND CURING. NONCOMPLIANCE WILL RESULT IN A RUINED REPAIR.

(14) Apply the adhesive film and repair plies as follows:

(a) Remove the separator film from one ply of adhesive film and place the adhesive film on the surface of the inner skin that will fay with the inner skin repair plies.

3. E. (14) (b) Remove the separator films from each repair ply and place the repair plies against the repair area with the proper orientation.

(c) Remove the separator film from the second ply of adhesive film and place the adhesive film over the repair plies.

(15) Fabricate and clean the replacement core plug per par. 2.D.(1) and 2.D.(2).

(16) Install the replacement core plug per par. 2.D.(3)(d) thru 2.D.(3)(m).

(17) Prepare and apply the repair plies to the outer skin according to par. 2.E.

(18) Bag repair and cure according to par. 2.F. and 2.G.

(19) Refinish the panel outer surface according to par. 2.H.

(20) Perform applicable post-repair requirements per par. 2.I. before returning the repaired component to flight service.

F. Repair 6 - Repair of Delamination Between Plies of Panel Edgeband

(1) Repair this type of damage per Repair 6 of 51-40-12.

G. Repair 7 - Repair of Damage to Plies on Edge of Honeycomb Panel (Fig. 14)

(1) Determine extent of damage according to par. 2.A.

(2) Remove all contamination and water from damaged area per par. 2.B. Area must be completely dried out.

CAUTION: DO NOT SAND INTO BOND PLY OR CORE (FIG. 15). LOSS OF STRUCTURAL STRENGTH OF THE COMPONENT WILL OCCUR IF THIS CAUTION IS NOT OBSERVED. BOND PLY IS PLY ADJACENT TO CORE.

(3) Remove damage and prepare area according to par. 2.C.

CAUTION: ON HYBRID PANELS, ENSURE THAT GRAPHITE REPAIR PLIES DO NOT EXTEND INTO AREAS OF FASTENER HOLES. ELECTROLYSIS BETWEEN THE METAL FASTENERS, SUPPORT STRUCTURE, AND GRAPHITE MAY CAUSE CORROSION IN THE ALUMINUM STRUCTURE.

(4) prepare and apply repair plies according to par. 2.E.

(5) Bag repair and cure according to par. 2.F. and 2.G.

3. G. (6) Refinish the repair according to par. 2.H.

(7) Perform applicable post-repair requirements per par. 2.I. before returning the repaired component to flight service.

H. Repair 8 - Repair of damage to Honeycomb Core on Edge of Honeycomb Panel (Fig. 15)

(1) Determine extent of damage according to par. 2.A.

(2) Remove all contamination and water from damaged area per par. 2.B. Area must be completely dried out.

(3) Remove damage and prepare area according to par. 2.C.

(4) Fabricate, clean, and install honeycomb replacement core plug per par. 2.D.

(5) Clean surfaces according to par. 2.C.(2)(e).

CAUTION: ON HYBRID PANELS, ENSURE THAT GRAPHITE REPAIR PLIES DO NOT EXTEND INTO AREAS OF FASTENER HOLES. ELECTROLYSIS BETWEEN METAL FASTENERS, SUPPORT STRUCTURE, AND GRAPHITE MAY OCCUR CAUSING CORROSION TO ALUMINUM STRUCTURE.

(6) Prepare and apply repair plies according to par. 2.E.

(7) Bag repair and cure according to par. 2.F. and 2.G.

(8) Refinish the repair according to par. 2.H.

(9) Perform applicable post-repair requirements per par. 2.I. before returning the repaired component to flight service.

I. Repair 9 - Repair of Damaged Panel Attach Hole in Honeycomb Panel Edgebands or Along Edges of Solid Laminate Panels (Fig. 16)

(1) Determine the extent of damage according to par. 2.A.

(2) Remove all contamination and water from damaged area per par. 2.B. Area must be completely dried out. Any structure in the repair area that cannot be dried out must be removed along with the other damage.

(3) Taper sand around the hole to remove damage according to Fig. 16.

(4) Clean area according to par. 2.C.(2)(e).

CAUTION: ON HYBRID PANELS, ENSURE THAT GRAPHITE REPAIR PLIES DO NOT EXTEND INTO AREAS OF FASTENER HOLES. ELECTROLYSIS BETWEEN METAL FASTENERS, SUPPORT STRUCTURE, AND GRAPHITE MAY OCCUR CAUSING CORROSION TO ALUMINUM STRUCTURE.

3. I. (5) Prepare and apply repair plies according to par. 2.E. and Fig. 16.

(6) Bag repair and cure according to par. 2.F. and 2.G.

(7) Refinish the repair according to par. 2.H.

(8) Drill and countersink fastener holes. Refer to 51-20-7 for hole drilling and machining of composite structure.

(9) Perform applicable post-repair requirements per par. 2.I. before returning the repaired component to flight service.

J. Repair 10 - Repair of Damage, 0.50-inch Diameter or Less, to Solid Laminates

(1) Repair this type of damage per repair 10 of 51-40-12 or Repair 10 of 51-40-15

K. Repair 11 - Repair of Damage, Greater than 0.50-Inch Diameter, to Solid Laminates (Fig. 19)

NOTE: This repair applies to components made from laminated graphite, aramid, or graphite/aramid/glass hybrid plies and epoxy resin without a honeycomb core.

(1) Determine extent of damage according to par. 2.A.

(2) Remove all contamination and water from damaged area per par. 2.B. Area must be completely dried out.

(3) Remove damage and prepare area according to par. 2.C.

(4) Clean surface according to par. 2.C.(2)(e).

(5) Prepare and apply repair plies according to par. 2.E.

(6) Bag repair and cure according to par. 2.E. and 2.G.

(7) Refinish the repair according to par. 2.H.

(8) Perform applicable post-repair requirements per par. 2.I. before returning the repaired component to flight service.

3. L. Repair 12 - Repair of Dents

(1) Determine extent of damage according to par. 2.A. If fiber damage or delamination is found, refer to specific component structural repair subject.

(2) If no fiber damage or delamination is found, repair this type of damage per Repair 12 of 51-40-12.

M. Repair 13- Repair of BMS 8-289 Aluminum Foil (Fig. 18)

NOTE: This repair is done in addition to the applicable repair of the underlying plies.

(1) Perform the applicable repair to the underlying plies per par. 3.A., 3.C. thru 3.E., 3.G. thru 3.I., or 3.K. up to and including the step for applying the repair plies to the surface that has aluminum foil (BMS 8-289).

(2) Butt-splice a ply of BMS 8-289, Type O, Class 350, Grade 1 or 2 over the repair area with a 0.25 inch maximum gap and no overlap allowance.

(3) Place a splice strip of etch-treated aluminum foil or BMS 8-289, Type O, Class 350, Grade 1 or 2 (placed adhesive side up) over the aluminum surface so that it has a 1 inch overlap on each side of the splice line. The outer edge of the splice strip is to be at least 1 inch from the edge of the part.

(4) Place a cover ply of BMS 5-154 Type II, Class 1, Grade 03 adhesive film or BMS 8-289, Type O, Class 350, Grade 1 or 2 (placed adhesive side down) over the repair so that it overlaps the splice strip by 1 inch on all sides.

(5) Complete the repair starting with the step following the last step performed in par. 3.M.(1).

REPAIR NO.	REPAIR TITLE	PARAGRAPH	FIGURE NO.
1	REPAIR OF DAMAGE TO ONE SKIN OF HONEYCOMB PANEL	3.A.	10
2	REPAIR OF DAMAGE, 0.50-INCH DIAMETER OR LESS, TO ONE SKIN AND HONEYCOMB CORE	3.B.	—
3	REPAIR OF DAMAGE, GREATER THAN 0.50-INCH DIAMETER, TO ONE SKIN AND HONEYCOMB CORE	3.C.	11
4	REPAIR OF DAMAGE TO BOTH SKINS AND HONEYCOMB CORE	3.D.	12
5	REPAIR OF DAMAGE TO HONEYCOMB PANEL WHERE ACCESS IS LIMITED TO ONE SIDE	3.E.	13
6	REPAIR OF DELAMINATION BETWEEN PLIES OF PANEL EDGEBAND	3.F.	—
7	REPAIR OF DAMAGE TO PLIES ON EDGE OF HONEYCOMB PANEL	3.G.	14
8	REPAIR OF DAMAGE TO HONEYCOMB CORE ON EDGE OF HONEYCOMB PANEL	3.H.	15
9	REPAIR OF DAMAGED PANEL ATTACH HOLE IN HONEYCOMB EDGEBANDS OR ALONG EDGES OF SOLID LAMINATE PANELS	3.I.	16
10	REPAIR OF DAMAGE, 0.50-INCH DIAMETER OR LESS, TO SOLID LAMINATES	3.J.	—
11	REPAIR OF DAMAGE, GREATER THAN 0.50-INCH DIAMETER, TO SOLID LAMINATES	3.K.	17
12	REPAIR OF DENTS	3.L.	—
13	REPAIR OF BMS 8-289 ALUMINUM FOIL	3.M.	18

Repair Index
Figure 1

141910

RESIN, PREPREG, OR ADHESIVE TYPE	COMPONENTS	PARTS BY WEIGHT	OPEN TIME BEFORE USE, OR POT LIFE OF MIXTURE	CURING TIME
RESIN MIX 1 (SEALER RESIN) (BMS 8-207, TYPE 1, CLASS I)	EC1838A RESIN EC1838B HARDENER	50 50	20 MINUTES AT 75° TO 79°F (24° TO 26°C)	2 HRS AT 105° (41°C) TO 125°F (52°C)
RESIN MIX 1 (SEALER RESIN) ALTERNATE (BMS 8-207 TYPE 1, CLASS II)	FR-40 RESIN FR-5413C HARDENER	99 TO 101 14.5 TO 15.5	20 MINUTES AT 75° TO 79°F (24° TO 26°C)	12 HRS MIN AT ROOM TEMP (65°F MIN) (19°C MIN) 1 HR MIN AT 150°F (66°C) TO 170°F (77°C)
RESIN MIX 1 (SEALER RESIN) ALTERNATE	EPIBOND 156A RESIN EPIBOND 941 HARDENER	98 TO 102 9.5 TO 10.5	45 TO 60 MINUTES AT 70°F (21°C)	SEE FIG. 9
RESIN MIX 1 (SEALER RESIN) ALTERNATE	EPIBOND 156A RESIN EPIBOND 156B HARDENER	98 TO 102 5.7 TO 6.3	15 TO 25 MINUTES AT 77°F (25°C)	12 HRS AT 70°F (21°C) OR 1 TO 3 HRS AT 150°F (66°C)
RESIN MIX 1 (SEALER RESIN) ALTERNATE	FR-5318S RESIN FR-5318C HARDENER	98 TO 102 49 TO 51	45 TO 60 MINUTES AT 70°F (21°C)	SEE FIG. 9
RESIN MIX 1 EPOX-O WELD (SEALER RESIN) ALTERNATE	TWO COMPONENT KIT	FOLLOW MANUFACTURERS INSTRUCTIONS FURNISHED WITH EACH KIT		
			45 TO 60 MINUTES AT 70°F (21°C)	SEE FIG. 9
BMS 5-25, TYPE II, GRADE 1 ADHESIVE	EPIBOND 1539A EPIBOND 1539B-10	113 ±5.6 100 ±5.0	60 MINUTES AT 70°F (21°C) TO 80°F (27°C)	12 HRS MIN AT 65°F (19°C) TO 100°F (38°C). 2 HRS MIN AT 115°F (46°C) TO 135°F (57°C)
BMS 5-92, TYPE I ADHESIVE	EC2216A GRAY EC2216B WHITE	140 100	2 HRS BELOW 100°F (38°C)	24 HRS MIN AT 65°F (19°C) TO 100°F (38°C). 180 ±10 MINUTES AT 110°F (43°C) TO 130°F (54°C)
BMS 5-90, TYPE III, CLASS 350-10-10, GRADE 50 FOAMING ADHESIVE FILM	FM-490A MA-562 PL-685		B C	SEE TEXT
BMS 5-90, TYPE IV, CLASS 350-10-10, FOAMING EXTRUDABLE ADHESIVE	PL 460		B C	SEE TEXT
BMS 5-154, TYPE II, CLASS 1, GRADE 05	METLBOND 1515-3M 05 PSF ADHESIVE FILM METLBOND 1515-3M-HT 05 PSF ADHESIVE FILM PL 795 05 PSF ADHESIVE FILM		10 DAYS AT 95°F (35°C)	SEE TEXT
BMS 5-154, TYPE II, CLASS 2, GRADE 05	PL 795 05 PSF ADHESIVE FILM		30 DAYS AT 95°F (35°C)	SEE TEXT

Resin, Prepreg, and Adhesive Specifications and Mixing Procedures
Figure 2 (Sheet 1)

RESIN, PREPREG, OR ADHESIVE TYPE	COMPONENTS	PARTS BY WEIGHT	OPEN TIME BEFORE USE, OR POT LIFE OF MIXTURE	CURING TIME
BMS 5-154, TYPE II, CLASS 1, GRADE 03	METLBOND 1515-3M 03 PSF ADHESIVE FILM METLBOND 1515-3M-HT 03 PSF ADHESIVE FILM PL 795 03 PSF ADHESIVE FILM		10 DAYS AT 95°F (35°C)	SEE TEXT
BMS 5-154, TYPE II, CLASS 2, GRADE 03	PL 795 03 PSF ADHESIVE FILM		30 DAYS AT 95°F (35°C)	SEE TEXT
BMS 8-145, TYPE I	FM-355 ADHESIVE FILM AF-131-2 ADHESIVE FILM		10 DAYS AT 90°F (32°C)	SEE TEXT
BMS 8-212 CLASS 1 (TAPE) (GRAPHITE PREPREG) TYPE II GRADE 95	RIGIDITE 5208T-300-95-35 PERCENT RIGIDITE 5208-C3000-95-35 PERCENT RIGIDITE 5208FT-300-95-35 PERCENT HYE-1034C(95)-II T3T95-12-F263-2 T6C95-12-F263-2 T2C95-12-F263-2 AS4/3501-5A		A	SEE TEXT
GRADE 190	RIGIDITE 5208T-300-190-35 PERCENT RIGIDITE 5208-C3000-190-35 PERCENT RIGIDITE 5208FT-300-190-35 PERCENT HYE-1034C(190)-II T3T190-12-F263-2 T5T190-12-F263-2 T6C190-12-F263-2 T2C190-12-F263-2 AS4/3501-5A			

Resin, Prepreg, and Adhesive Specifications and Mixing Procedures
Figure 2 (Sheet 2)

RESIN, PREPREG, OR ADHESIVE TYPE	COMPONENTS	PARTS BY WEIGHT	OPEN TIME BEFORE USE, OR POT LIFE OF MIXTURE	CURING TIME
BMS 8-212 (CONT) (GRAPHITE PREPREG) CLASS 2 (FABRIC) TYPE III STYLE 3K-135-8H			A	SEE TEXT
	RIGIDITE 5208 WOVEN T-300 STYLE 3K-135-8H-37 PERCENT			
	RIGIDITE 5208 WOVEN C3000 STYLE 3K-135-8H-37 PERCENT			
	RIGIDITE 5208F WOVEN T-300 STYLE 3K-135-8H-37 PERCENT			
	HMF-133/34-III			
	F3T-584-42-F263-7			
	F3C-584-42-F263-7			
	A370-8H/3501-5AD			
	CYCOM 985GF3135H8			
	FIBREDUX 922C-815-37%			
	R922-C3K1358H-37			
TYPE IV STYLE 3K-70-PW				
	RIGIDITE 5208 WOVEN T-300 STYLE 3K-70-PW-40 PERCENT			
	RIGIDITE 5208 WOVEN C3000 STYLE 3K-70-PW-40 PERCENT			
	RIGIDITE 5208F WOVEN T-300 STYLE 3K-70-PW-40 PERCENT			
	HMF-322/34C-IV			
	HMF-1322/34C-IV			
	W3C-282-42-F263-8			
	W3T-282-42-F263-8			
	A193-P/3501-5AD			
	CYCOM 985GF3070PW			
	FIBREDUX 922C-814NT-40%			
	R922-C3K70PW-40			

Resin, Prepreg, and Adhesive Specifications and Mixing Procedures
Figure 2 (Sheet 3)

141917

RESIN, PREPREG, OR ADHESIVE TYPE	COMPONENTS	PARTS BY WEIGHT	OPEN TIME BEFORE USE, OR POT LIFE OF MIXTURE	CURING TIME
BMS 8-139 (GLASS PREPREG) CLASS I TYPE 120 TYPE 181	 120-F161-108 F50 NARMCO 588-120 VOLAN A 1581-F161-108 F50 NARMCO 588-181-VOLAN A		A	SEE TEXT
BMS 8-218 (ARAMID PREPREG) STYLE 120 STYLE 285	 KEVLAR 49-120 F161-188 CYCOM 985-K120 MXM-7880/KEVLAR 49-120 R 9369-120K KEVLAR 49-285 F161-188 CYCOM 985-K285 MXM-7880/KEVLAR 49-285 R 9369-285K		A	SEE TEXT
BMS 8-256 (GRAPHITE PREPREG) CLASS 2 (FABRIC) TYPE I STYLE 3K-70-PW	 W3T-282-42-F593-1 HMF-322/81C		10 DAYS AT 65°F (19°C) TO 80°F (27°C)	SEE TEXT
BMS 8-289 (ALUMINUM FOIL) TYPE O, CLASS 350 GRADE 1 GRADE 2	 CYCOM AEL-100-1/1100 ADH WT 0.025 ±0.01 LB/FT^2 C-CLAD H250/350-002 ADH WT 0.002 ±0.0015 LB/FT^2		10 DAYS AT 10°F (-12°C) TO 95°F (35°C)	SEE TEXT

Resin, Prepreg, and Adhesive Specifications and Mixing Procedures
Figure 2 (Sheet 4)

141919

WARNING: THESE CHEMICALS CONTAIN TOXIC INGREDIENTS. PROVIDE ADEQUATE VENTILATION AND PROTECT THE SKIN AND EYES FROM CONTACT WITH UNCURED RESINS OR CURING AGENT. WEAR RUBBER GLOVES OVER COTTON GLOVES FOR PROTECTION OF HANDS. IF SKIN IS EXPOSED TO DIRECT CONTACT WITH UNCURED RESINS OR CURING AGENT, WASH WITH WARM WATER OR SOAP. AVOID THE USE OF SOLVENTS FOR CLEANING THE SKIN.

CAUTION: TO PREVENT CONTAMINATION OF THE RESIN, DO NOT USE WAXED CONTAINERS FOR MIXING.

	RESIN MIXING AND ADHESIVE PREPARATION PROCEDURES
RESIN MIX 1 BMS 5-25, BMS 5-92	ADD HARDENER TO RESIN AND MIX THOROUGHLY
BMS 5-90, BMS 5-154	REMOVE WRAPPER BEFORE USE

NOTES

- REFER TO 51-20-00 FOR SOURCES OF MATERIALS

[A] ALLOWABLE OUT-TIME OF THIS MATERIAL IS GIVEN IN TERMS OF EXPOSURE UNITS. SEE TABLE I TO DETERMINE HOW MANY EXPOSURE UNITS ARE ACCUMULATED AND FOR THE TOTAL NUMBER OF EXPOSURE UNITS ALLOWED BEFORE USE. MATERIALS EXPOSED TO TEMPERATURES ABOVE 110°F (43°C) ARE TO BE REJECTED

[B] REMOVE THE ADHESIVE MATERIAL FROM THE COLD STORAGE AREA. KEEP THE MATERIAL IN AN AREA WHERE THE TEMPERATURE IS 65°F (18°C) TO 90°F (32°C) FOR A MINIMUM OF 30 MINUTES FOR EACH POUND OF WEIGHT.

CONDENSATION ON THE EXTERIOR OF THE ROLL IS NOT AN ACCURATE INDICATOR THAT THE MATERIAL IS READY TO BE USED. MAKE SURE THE MATERIAL TEMPERATURE IS EQUAL TO ROOM TEMPERATURE BEFORE YOU USE IT.

[C] IF THE TOTAL TIME OUT OF COLD STORAGE IS NOT MORE THAN 10 DAYS, THE MATERIAL CAN BE PUT BACK INTO COLD STORAGE. THIS CAN BE DONE ONE OR MORE TIMES.

MATERIAL	EXPOSURE UNITS ACCUMULATED EACH HOUR THE MATERIAL IS EXPOSED TO THE TEMPERATURE RANGES GIVEN BELOW					TOTAL EXPOSURE UNITS ALLOWED BEFORE USE
	10°F TO 40°F (-12°C TO 4°C)	41°F TO 80°F (5°C TO 27°C)	81°F TO 90°F (27°C TO 32°C)	91°F TO 100°F (33°C TO 38°C)	101°F TO 110°F (38°C TO 43°C)	
BMS 8-139	—	1	15	15	15	360
BMS 8-212	1	1	1.4	2.4	8.5	408
BMS 8-218	—	1	7	7	7	168

TABLE I

Resin, Prepreg, and Adhesive Specifications and Mixing Procedures
Figure 2 (Sheet 5)

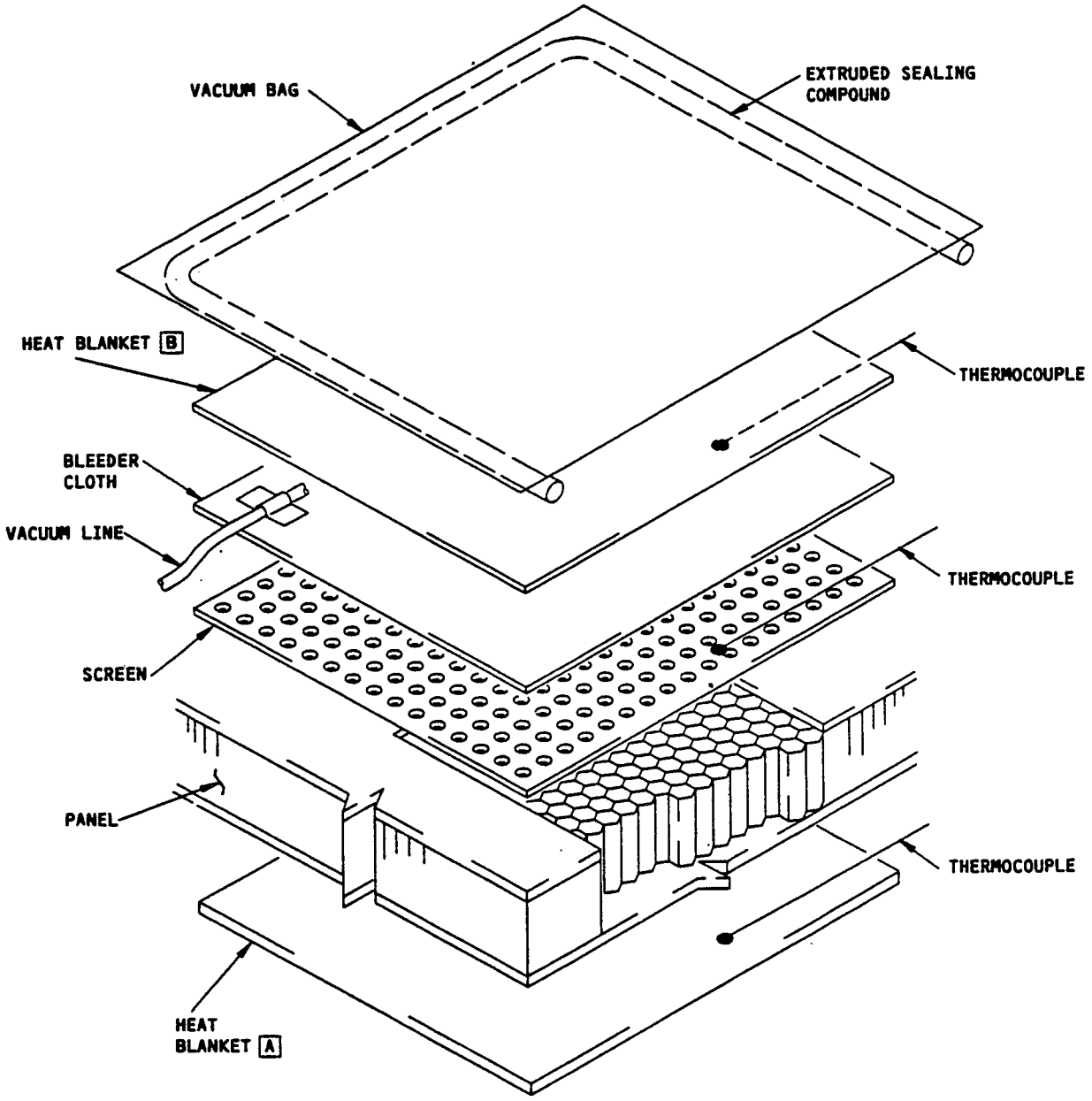

NOTES

A PREFERRED LOCATION OF HEAT BLANKET WHEN OPPOSITE FACE IS ACCESSIBLE

B ALTERNATE LOCATION OF HEAT BLANKET WHEN OPPOSITE SIDE IS INACCESSIBLE. THIS LOCATION MAY BE USED FOR AN ADDITIONAL HEAT BLANKET TO ACCELERATE WATER REMOVAL

Water Removal From Honeycomb Sandwich
Figure 3

141923

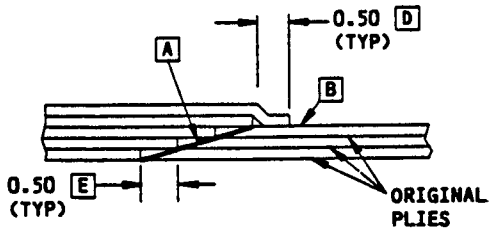

TAPER SANDED SKIN
DETAIL I

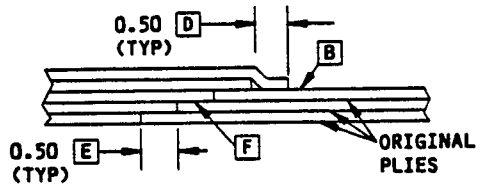

STEP SANDED SKIN
DETAIL II

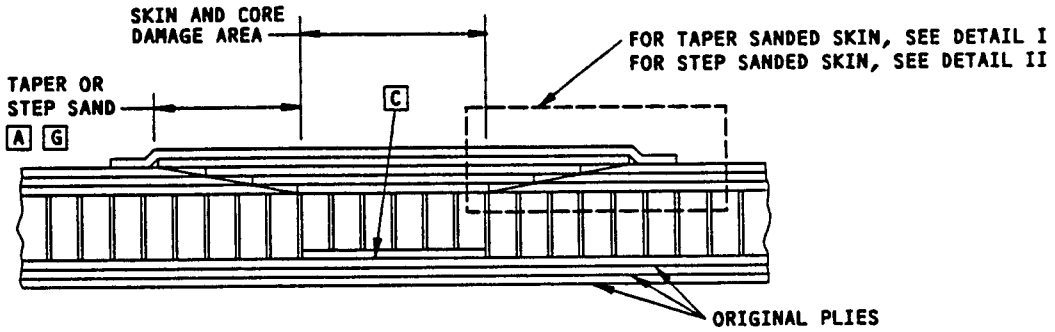

SECTION THRU TYPICAL REPAIR

NOTES

A TAPER SAND OR STEP SAND EXISTING PLIES AROUND REPAIR AREA A MINIMUM OF 0.50 INCH FOR EACH EXISTING PLY

B DO NOT EXPOSE OR DAMAGE FILAMENTS IN UNTAPERED OR UNSTEPPED AREA WHEN SANDING

C SANDING MUST NOT EXPOSE OR DAMAGE THE FILAMENTS IN BOND PLY (PLY BONDED TO ORIGINAL CORE)

D FIRST EXTRA REPAIR PLY MUST OVERLAP AT LEAST 0.50 INCH PAST EDGE OF LAST REPAIR PLY. EACH SUCCEEDING EXTRA REPAIR PLY MUST OVERLAP AT LEAST 0.50 INCH PAST EDGE OF PRECEDING EXTRA REPAIR PLY

E EACH REPAIR PLY MUST OVERLAP AT LEAST 0.50 INCH PAST EDGE OF PRECEDING REPAIR PLY

F REMOVE DAMAGED PLIES IN STEPS. DO NOT EXPOSE OR DAMAGE FILAMENTS IN STEPPED AREA

G TAPER SAND SURFACES IN AREAS OF CRITICAL AERODYNAMIC SMOOTHNESS. REFER TO 51-70

Sanding and Overlap Requirements
Figure 4

141925

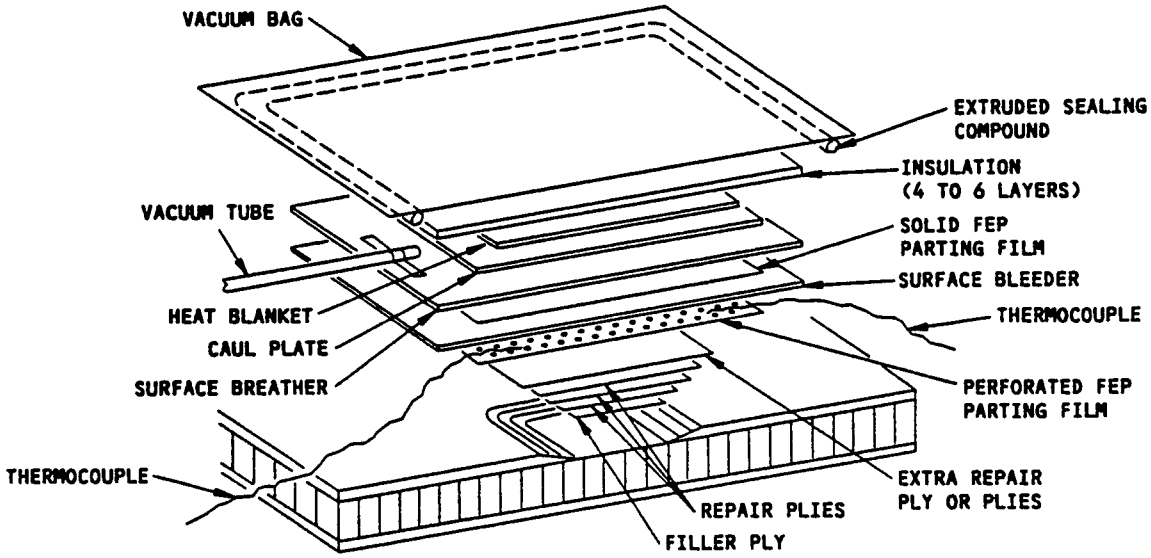

HONEYCOMB PANEL SHOWN
SOLID LAMINATE SIMILAR

BAGGING SEQUENCE FOR SKIN PLY REPAIR

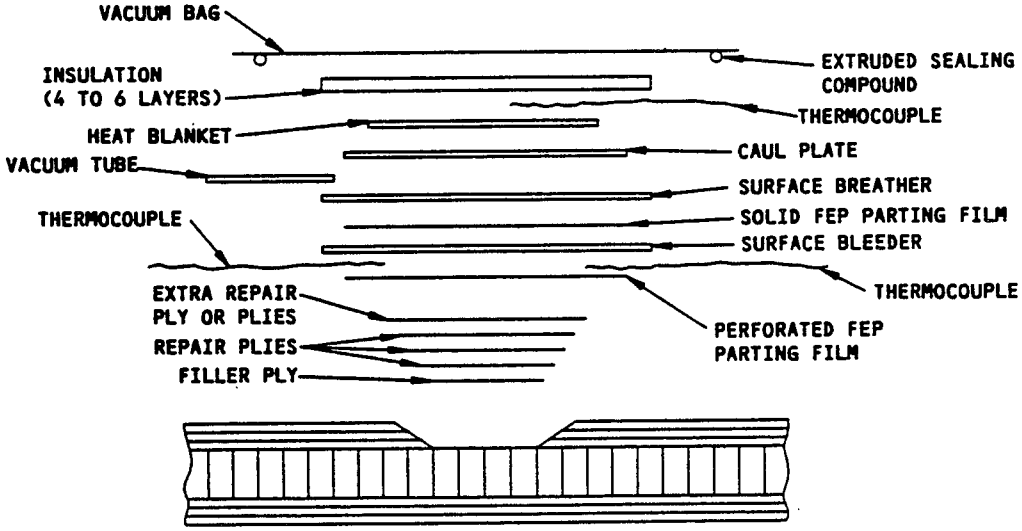

SECTION THRU SKIN PLY REPAIR

NOTES

[A] ONE PLY OF ADHESIVE FILM (FOR FULL DEPTH CORE REPLACEMENT, WHERE DAMAGE DOES NOT EXTEND THROUGH BOTH SKINS). FOR PARTIAL CORE REPLACEMENT USE TWO PLIES OF ADHESIVE FILM WITH ONE PLY OF GLASS FABRIC BETWEEN THEM

Application of Pressure During Cure
Figure 5 (Sheet 1)

141928

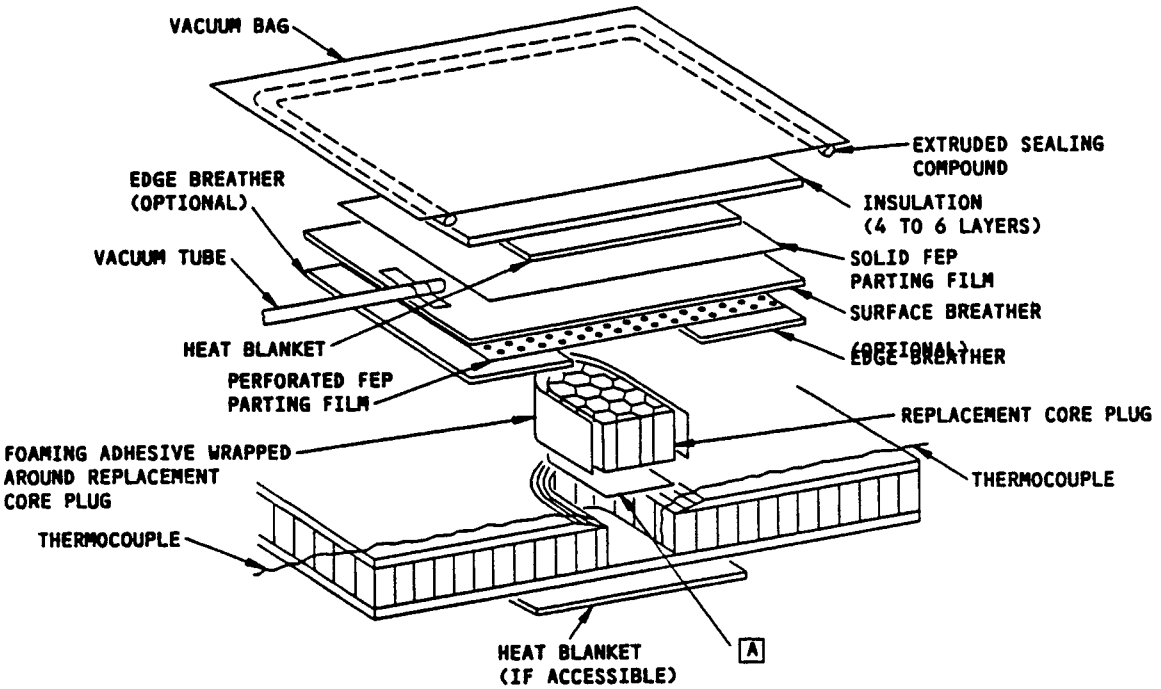

BAGGING SEQUENCE FOR CORE REPLACEMENT

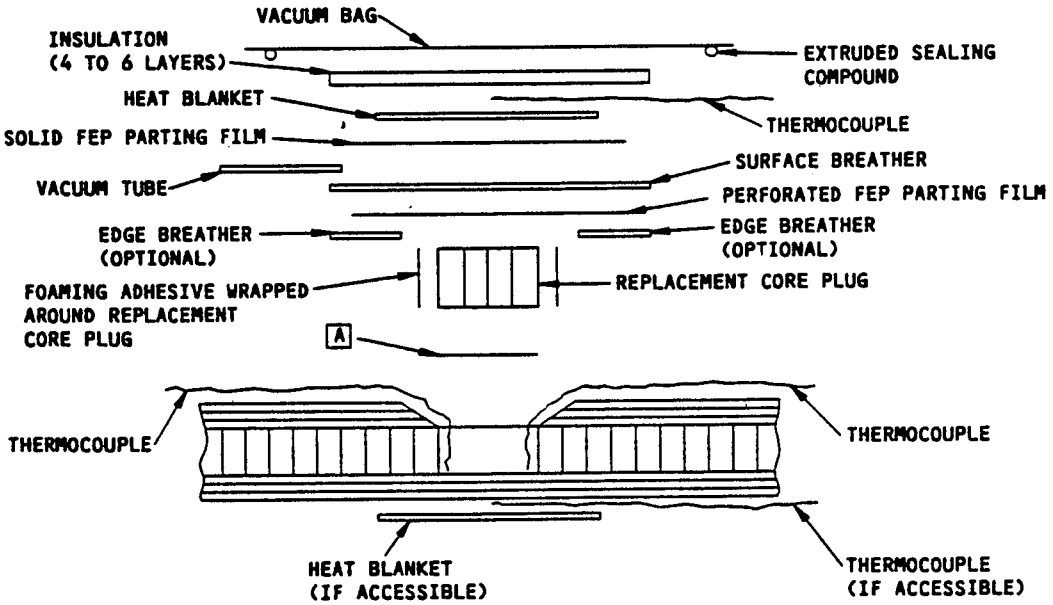

SECTION THRU CORE REPLACEMENT REPAIR

Application of Pressure During Cure
Figure 5 (Sheet 2)

141931

ORIGINAL PLY MATERIAL		REPAIR PLY MATERIAL	REPAIR PLY SUBSTITUTE MATERIAL
GLASS FABRIC	BMS 8-139, TYPE 120	BMS 8-139, TYPE 120	BMS 8-139, TYPE 181 [A]
	BMS 8-139, TYPE 181	BMS 8-139, TYPE 181	BMS 8-139, TYPE 120 [B]
ARAMID FABRIC	BMS 8-218, STYLE 120	BMS 8-218, STYLE 120	BMS 8-139, TYPE 120 [C]
	BMS 8-218, STYLE 285	BMS 8-218, STYLE 285	BMS 8-139, TYPE 181 [D]
GRAPHITE TAPE	BMS 8-212, TYPE II, CLASS 1 OR 3, ALL GRADES	BMS 8-212, TYPE II, CLASS 1, SAME GRADE AS ORIGINAL	BMS 8-212, TYPE IV, CLASS 2, STYLE 3K-70-PW [E]
GRAPHITE FABRIC	BMS 8-212, TYPE IV, CLASS 2, STYLE 3K-70-PW	USE SAME MATERIAL AS ORIGINAL	NONE
	BMS 8-256, TYPE I, CLASS 2, STYLE 3K-70-PW		
	BMS 8-212, TYPE III, CLASS 2, STYLE 3K-135-8H		
ALUMINUM FOIL/GLASS FABRIC	BMS 8-289, TYPE 120, CLASS 350, ALL GRADES	BMS 8-139, TYPE 120	NONE
ALUMINUM COATED GLASS FABRIC	BMS 8-278, TYPE I, CLASS 350	BMS 8-139, TYPE 181	NONE
	BMS 8-278, TYPE II, CLASS 350	BMS 8-139, TYPE 120	NONE

REPAIR PLY MATERIALS AND SUBSTITUTE MATERIALS
TABLE I

NOTES

[A] USE ONE PLY OF BMS 8-129, TYPE 181 IN PLACE OF TWO PLIES OF BMS 8-139, TYPE 120

[B] USE THREE PLIES OF BMS 8-139, TYPE 120 IN PLACE OF ONE PLY OF BMS 8-139, TYPE 181

[C] USE ONE PLY OF BMS 8-139, TYPE 120 IN PLACE OF ONE PLY OF BMS 8-218, STYLE 120

[D] USE ONE PLY OF BMS 8-139, TYPE 181 IN PLACE OF ONE PLY OF BMS 8-218, STYLE 285

[E] FOR NUMBER OF GRAPHITE FABRIC PLIES REQUIRED, SEE TABLE II

Repair Ply Materials
Figure 6 (Sheet 1)

141933

NUMBER OF PLIES					
	ORIGINAL PLIES (GRAPHITE TAPE)			REPAIR PLIES (GRAPHITE FABRIC)	
TAPE GRADE	ORIGINAL PLY ORIENTATION			REPAIR PLY ORIENTATION	
	0° OR 90°	+45°	-45°	0° OR 90°	±45°
95	1	—	—	1	—
	—	1	—	—	1
	—	—	1	—	1
	—	1	1	—	1
145	1	—	—	1	1
	—	1	—	—	1
	—	—	1	—	1
190	1	—	—	2	—
	—	1	—	—	1
	—	—	1	—	1

SUBSTITUTION OF GRAPHITE FABRIC FOR GRAPHITE TAPE
TABLE II

Repair Ply Materials
Figure 6 (Sheet 2)

141936

COMPONENT MATERIAL	EXTRA PLY MATERIAL
GRAPHITE/ARAMID/GLASS HYBRID	BMS 8-212, TYPE IV, CLASS 2, STYLE 3K-70-PW [A]
GRAPHITE	BMS 8-212, TYPE IV, CLASS 2, STYLE 3K-70-PW
ARAMID	BMS 8-218, STYLE 120 OR 285; OR BMS 8-139, TYPE 120 OR 181

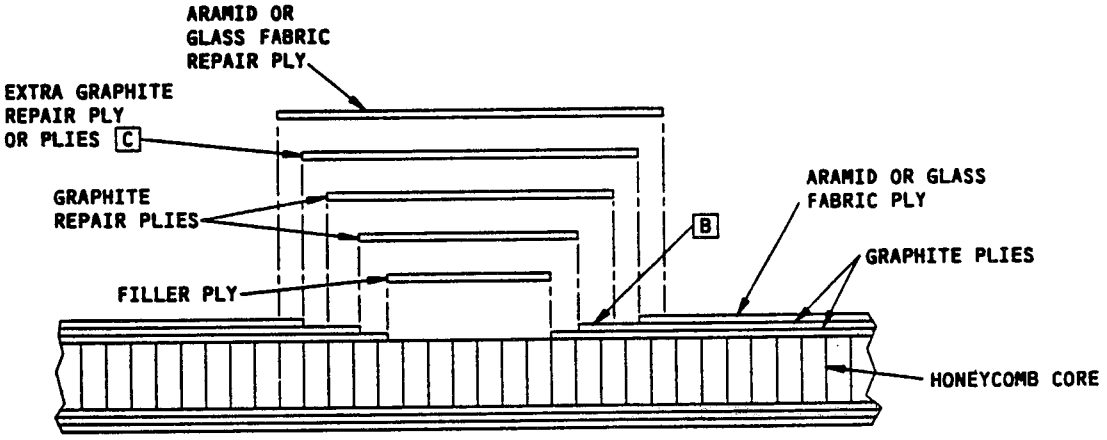

HONEYCOMB PANEL SHOWN
SOLID LAMINATE SIMILAR
DETAIL I

NOTES

[A] ON ALL HYBRID PANELS, AVOID BONDING ARAMID OR GLASS FABRIC PLIES BETWEEN GRAPHITE PLIES. SEE DETAIL I

[B] THE EXISTING OUTER PLY OF ARAMID OR GLASS FABRIC MUST BE STEP OR TAPER SANDED TO ALLOW AN ADDITIONAL OVERLAP OF 0.50 INCH FOR EACH EXTRA GRAPHITE REPAIR PLY

[C] LOCATE THE EXTRA GRAPHITE REPAIR PLY AT THIS LOCATION TO AVOID BONDING ARAMID OR GLASS FABRIC PLIES BETWEEN GRAPHITE PLIES

Extra Repair Ply Materials
Figure 7

141937

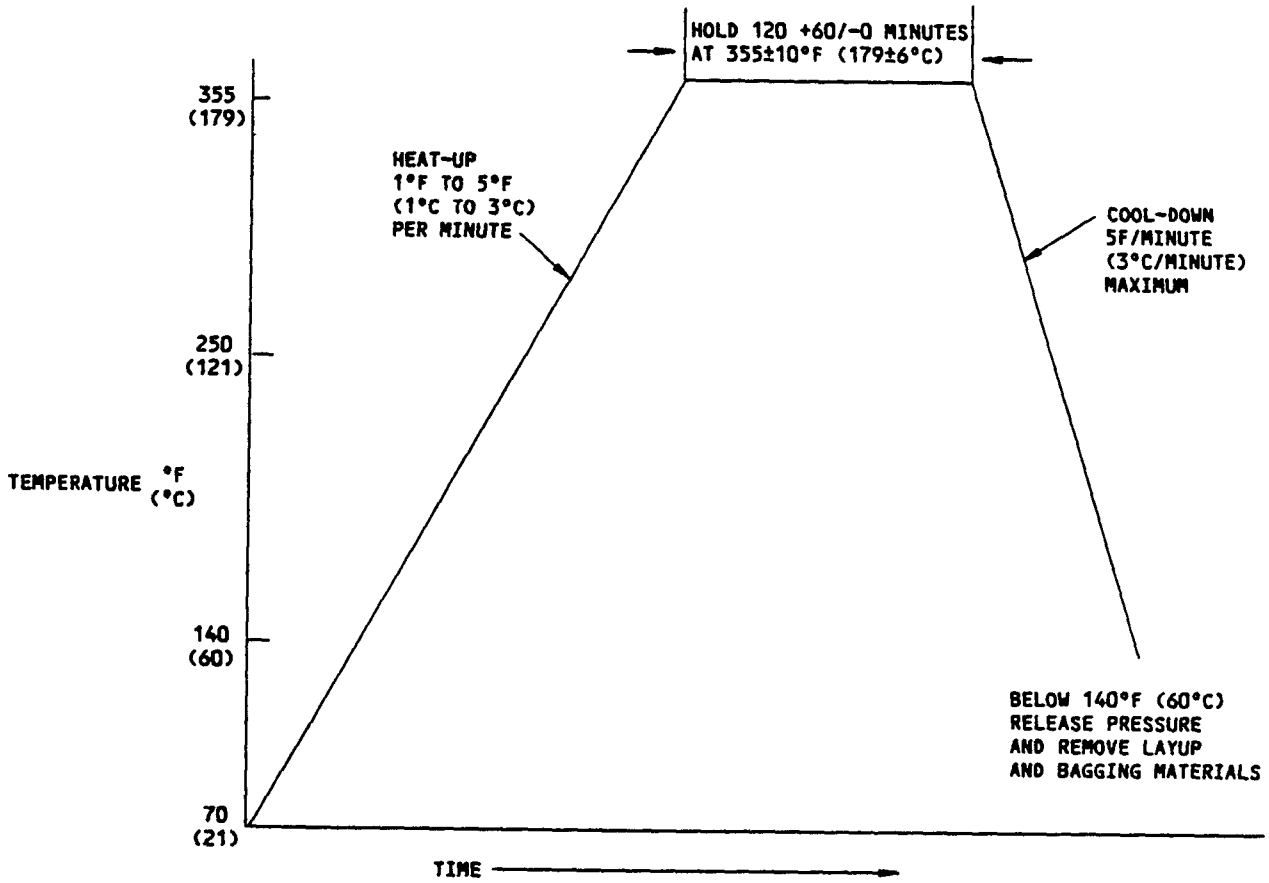

NOTES

- MAINTAIN A VACUUM OF 22 INCHES OF MERCURY MINIMUM DURING THE ENTIRE CURE CYCLE

Repair Cure Cycle
Figure 8

141939

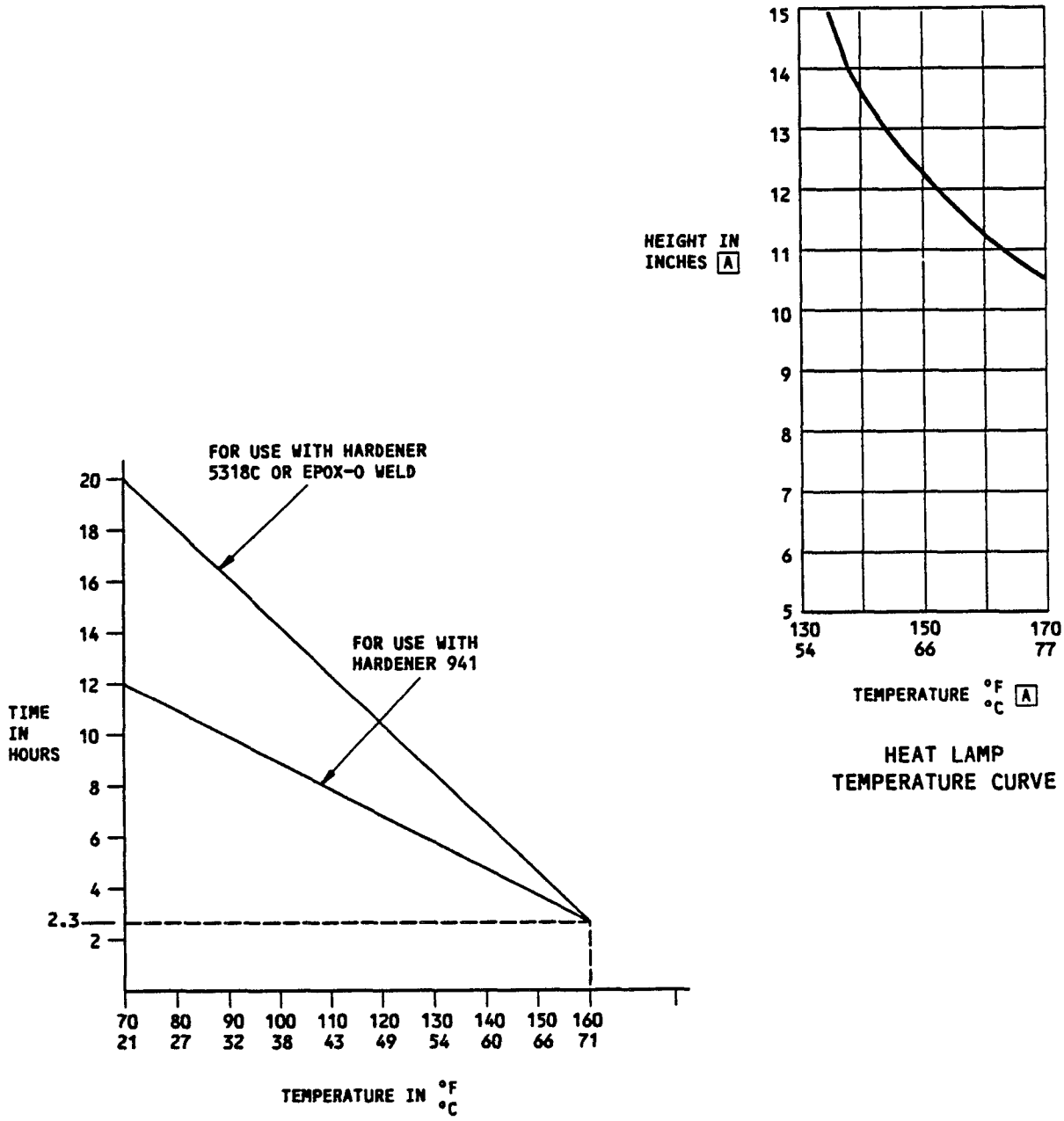

NOTES

- USE THERMOCOUPLES TO MONITOR TEMPERATURE

A THE HEIGHT IN INCHES OF 250 WATT HEAT LAMP FROM THE SURFACES OF THE PATCH VS TEMPERATURE AT SURFACE OF PART

Sealer Resin Cure Temperature and Heat Lamp Temperature Curve
Figure 9

141941

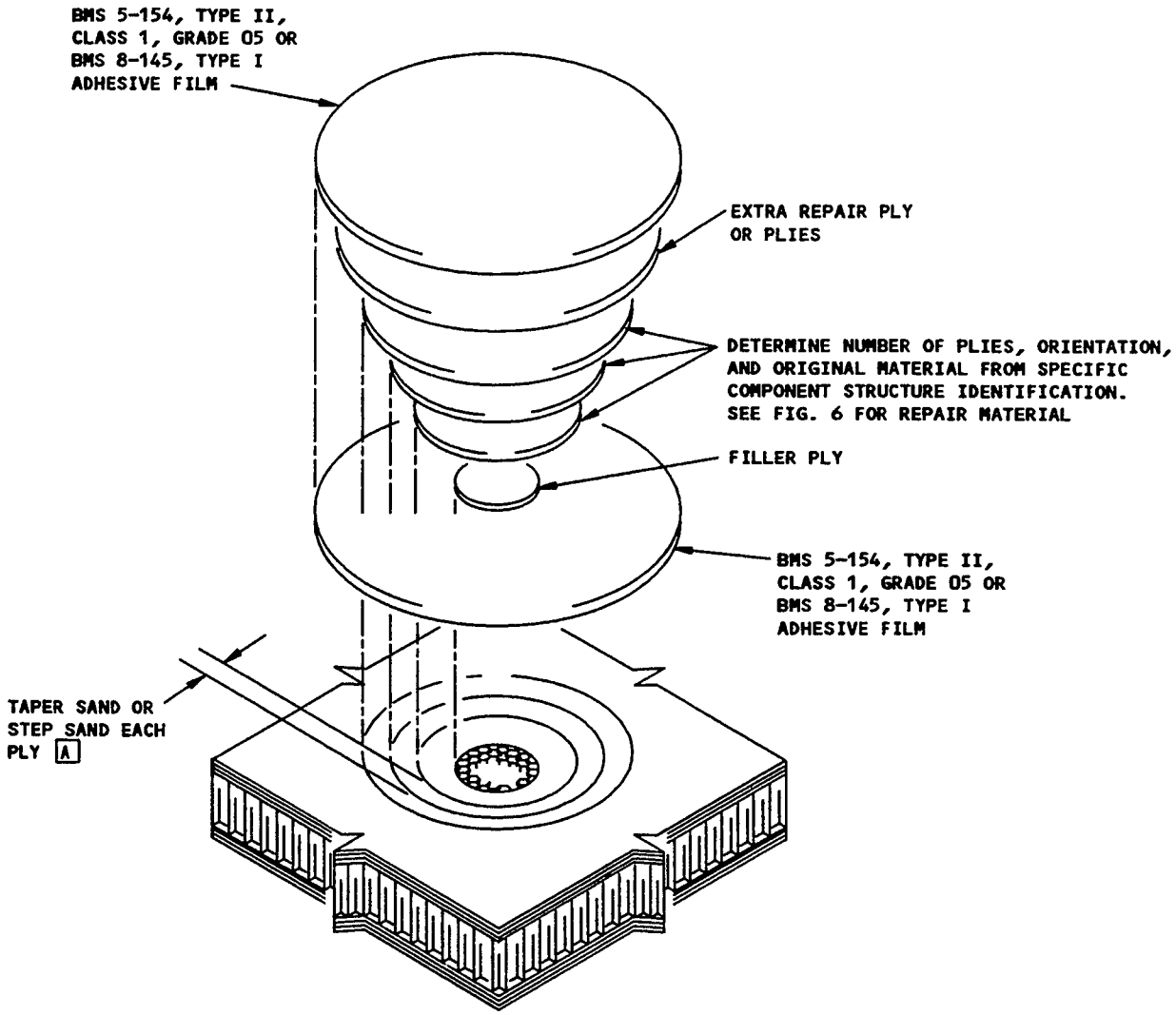

NOTES

A FOR EXTERNAL SKINS, TAPER SANDING IS RECOMMENDED. TAPER SAND SURFACES IN AREAS OF CRITICAL AERODYNAMIC SMOOTHNESS. REFER TO 51-70

Repair 1 - Repair of Damage to One Skin of Honeycomb Panel
Figure 10

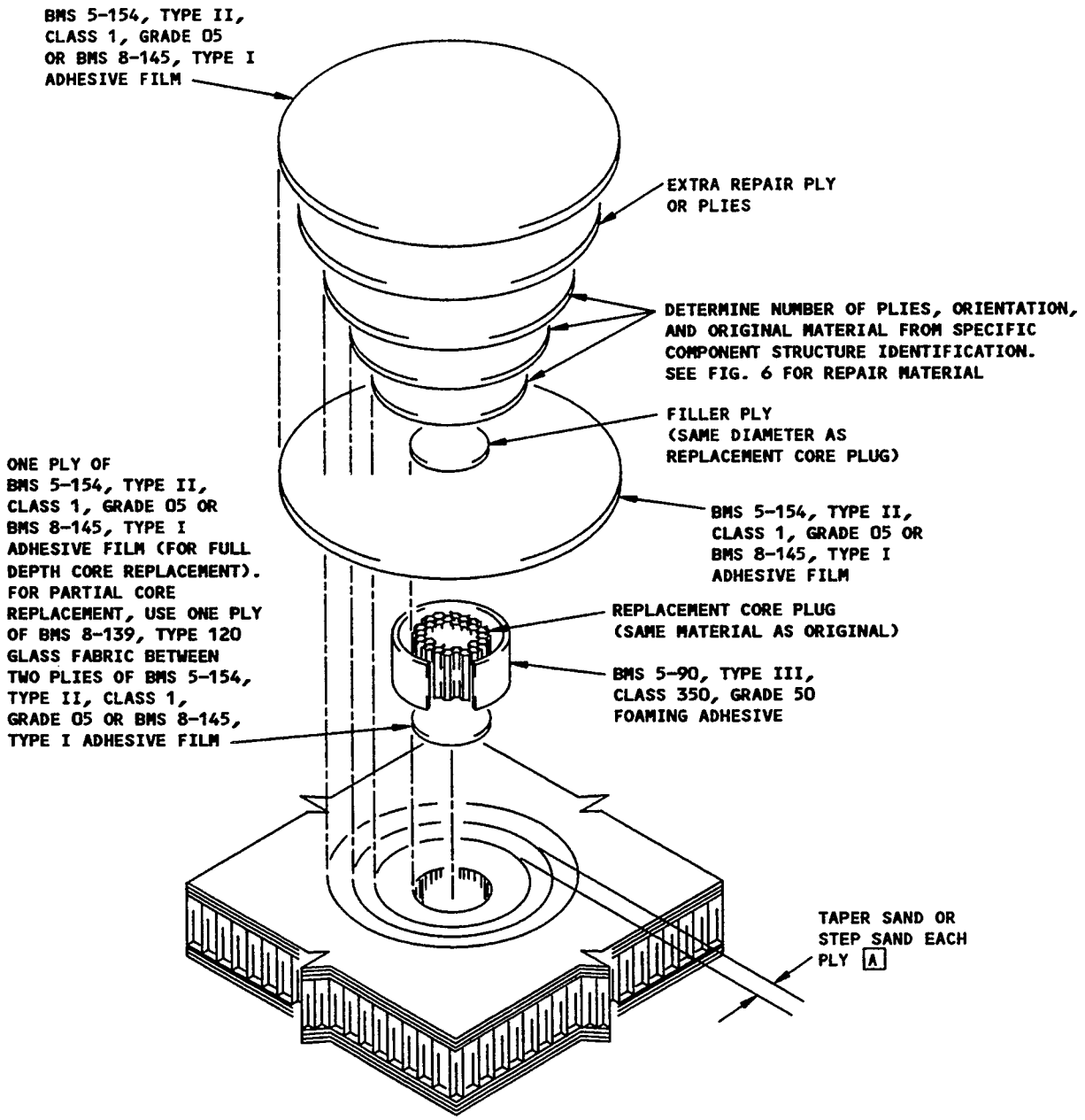

NOTES

A FOR EXTERNAL SKINS, TAPER SANDING IS RECOMMENDED. TAPER SAND SURFACES IN AREAS OF CRITICAL AERODYNAMIC SMOOTHNESS. REFER TO 51-70

Repair 3 - Repair of Damage, Greater Than 0.50-inch Diameter, to One Skin and Honeycomb Core
Figure 11

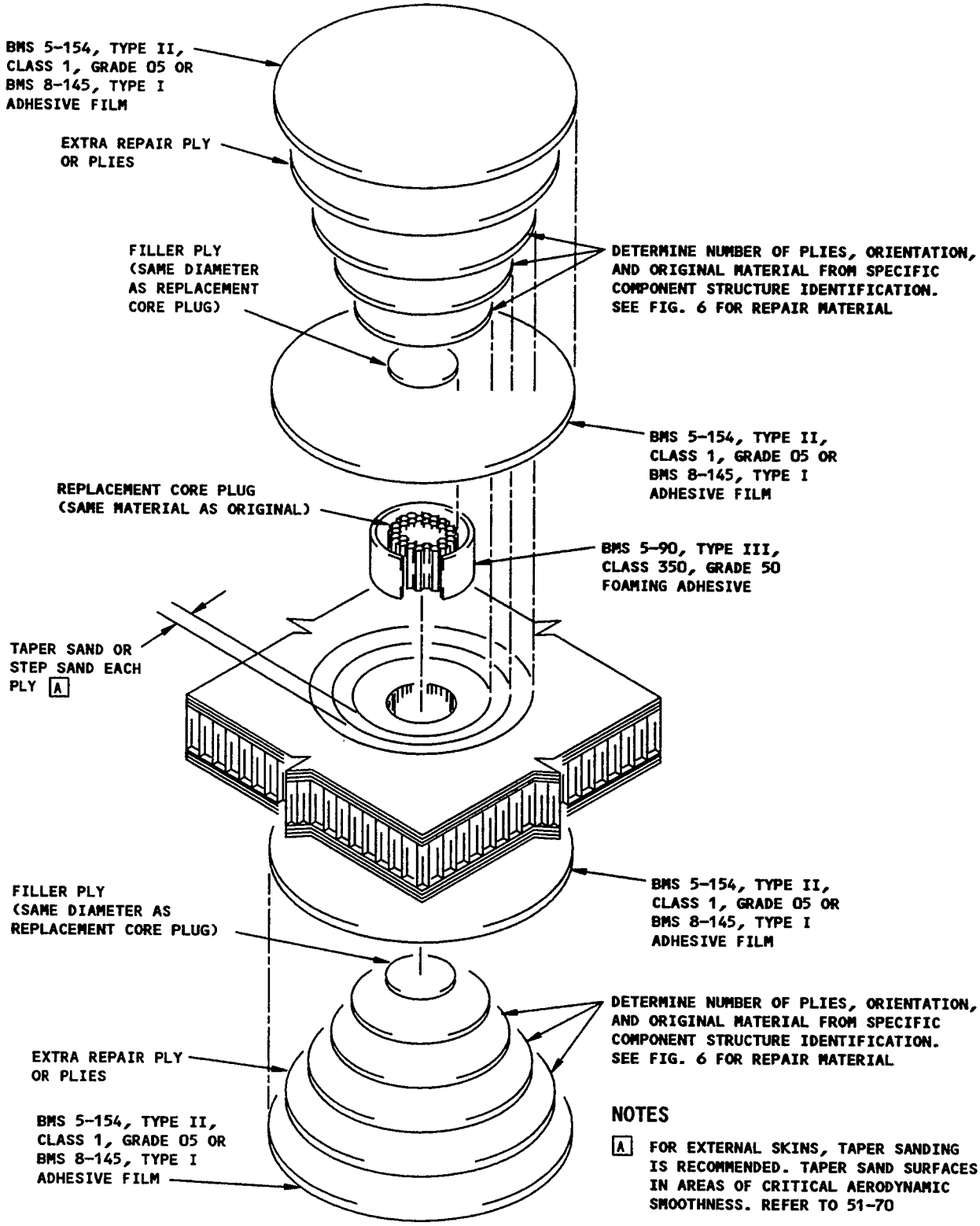

NOTES

A FOR EXTERNAL SKINS, TAPER SANDING IS RECOMMENDED. TAPER SAND SURFACES IN AREAS OF CRITICAL AERODYNAMIC SMOOTHNESS. REFER TO 51-70

Repair 4 - Repair of Damage to Both Skins and Honeycomb Core
Figure 12

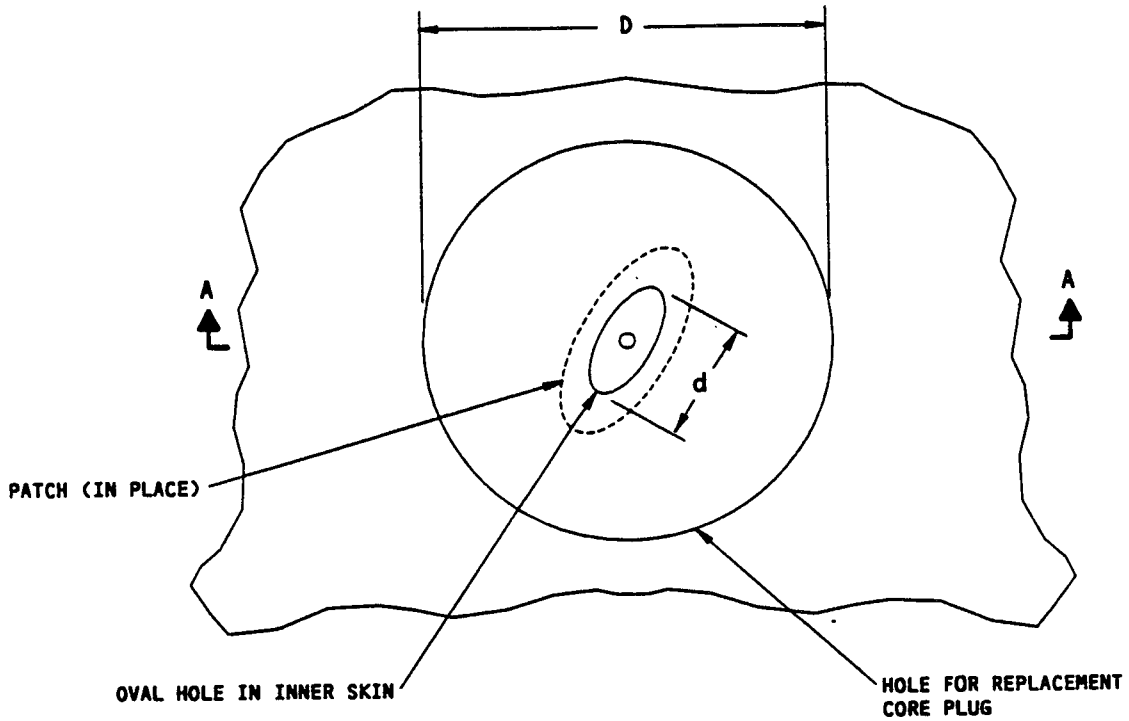

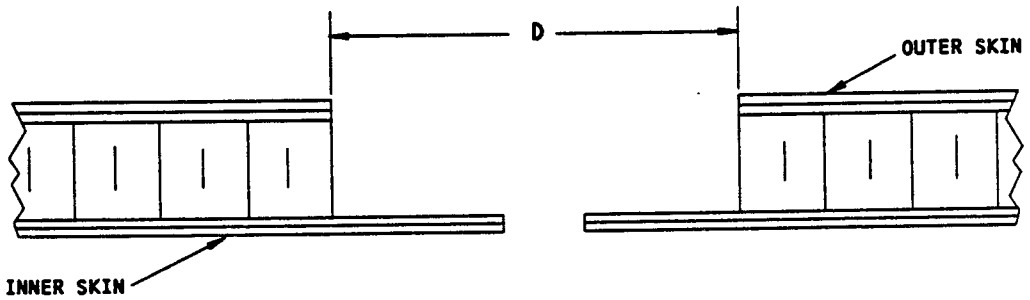

SECTION A-A
(PATCH NOT SHOWN)

DETAIL I

NOTES

- D = d + N + 1
  d = MAJOR DIAMETER OF OVAL HOLE IN INNER SKIN
  N = NUMBER OF PLIES IN INNER SKIN
  D = DIAMETER OF HOLE FOR REPLACEMENT CORE PLUG

[A] FOR EXTERNAL SKINS, TAPER SANDING IS RECOMMENDED. TAPER SAND SURFACES IN AREAS OF CRITICAL AERODYNAMIC SMOOTHNESS. REFER TO 51-70

Repair 5 - Repair of Damage to Honeycomb Panel Where Access is Limited to One Side
Figure 13 (Sheet 1)

141949

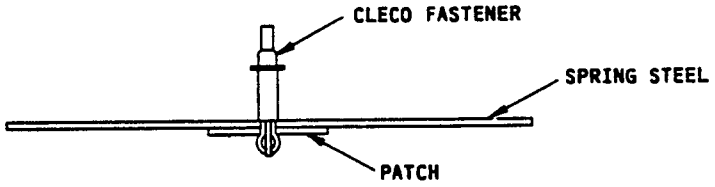

ASSEMBLE PATCH AND SPRING STEEL
DETAIL II

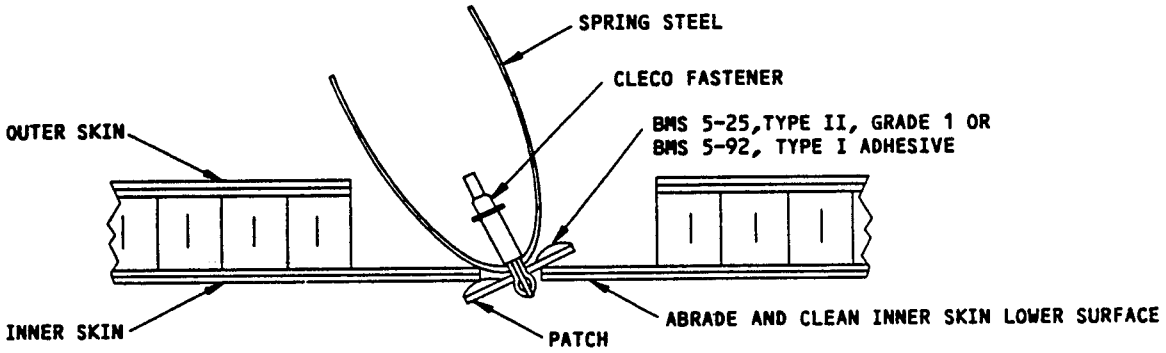

INSERT PATCH INTO OVAL HOLE
DETAIL III

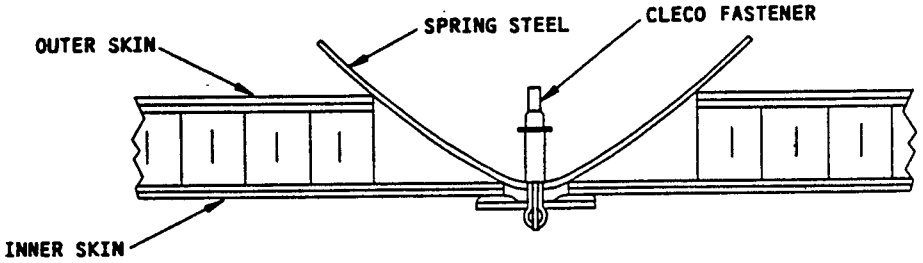

HOLD PATCH IN PLACE WHILE CURING
DETAIL IV

Repair 5 - Repair of Damage to Honeycomb Panel Where
Access is Limited to One Side
Figure 13 (Sheet 2)

141951

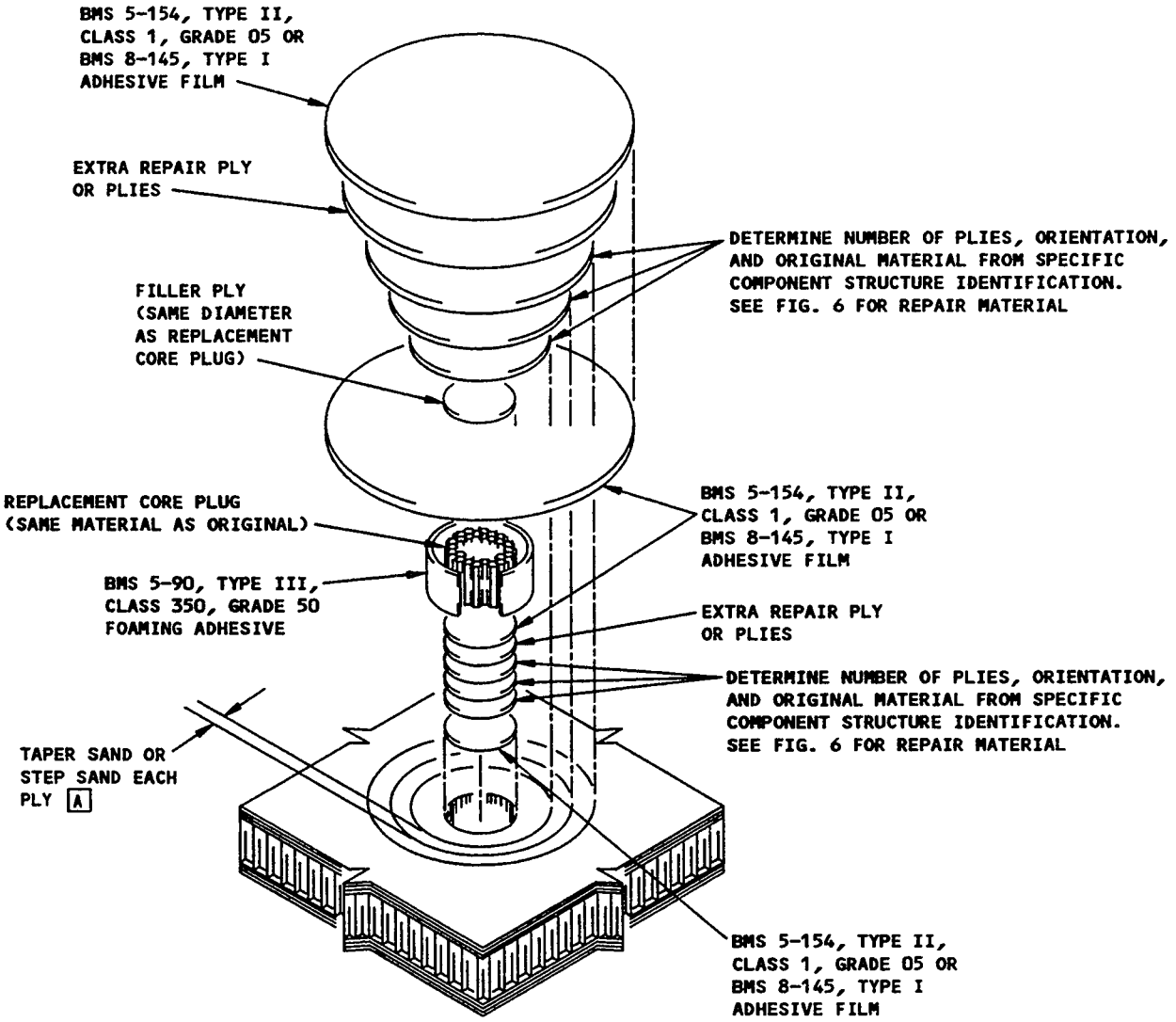

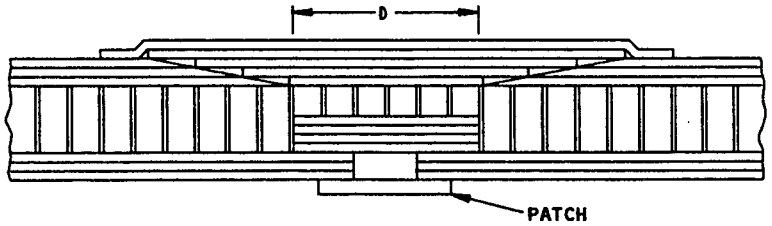

SECTION THRU REPAIR

Repair 5 - Repair of Damage to Honeycomb Panel Where Access is Limited to One Side
Figure 13 (Sheet 3)

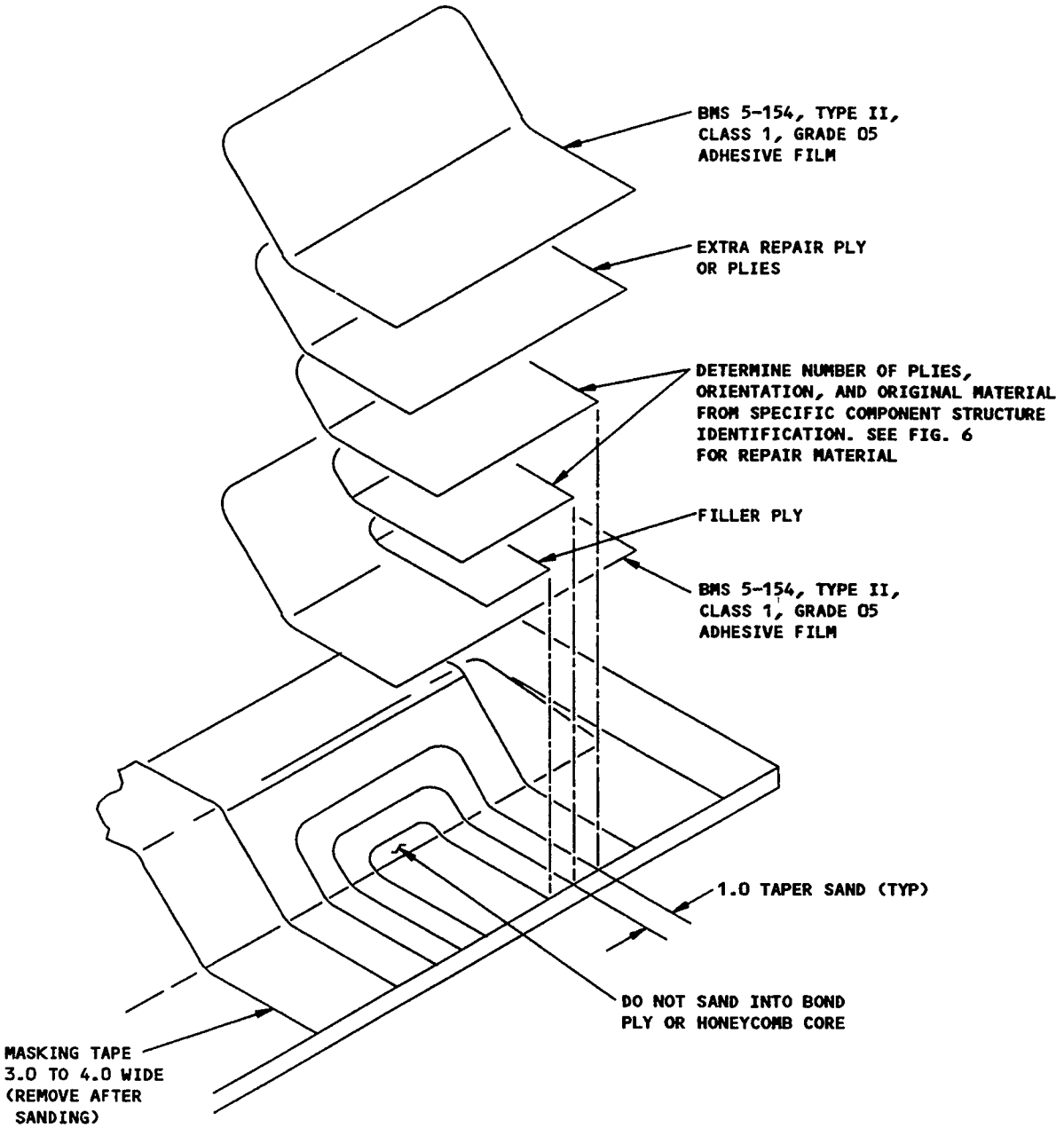

Repair 7 - Repair of Damage to Plies on Edge of Honeycomb Panel
Figure 14

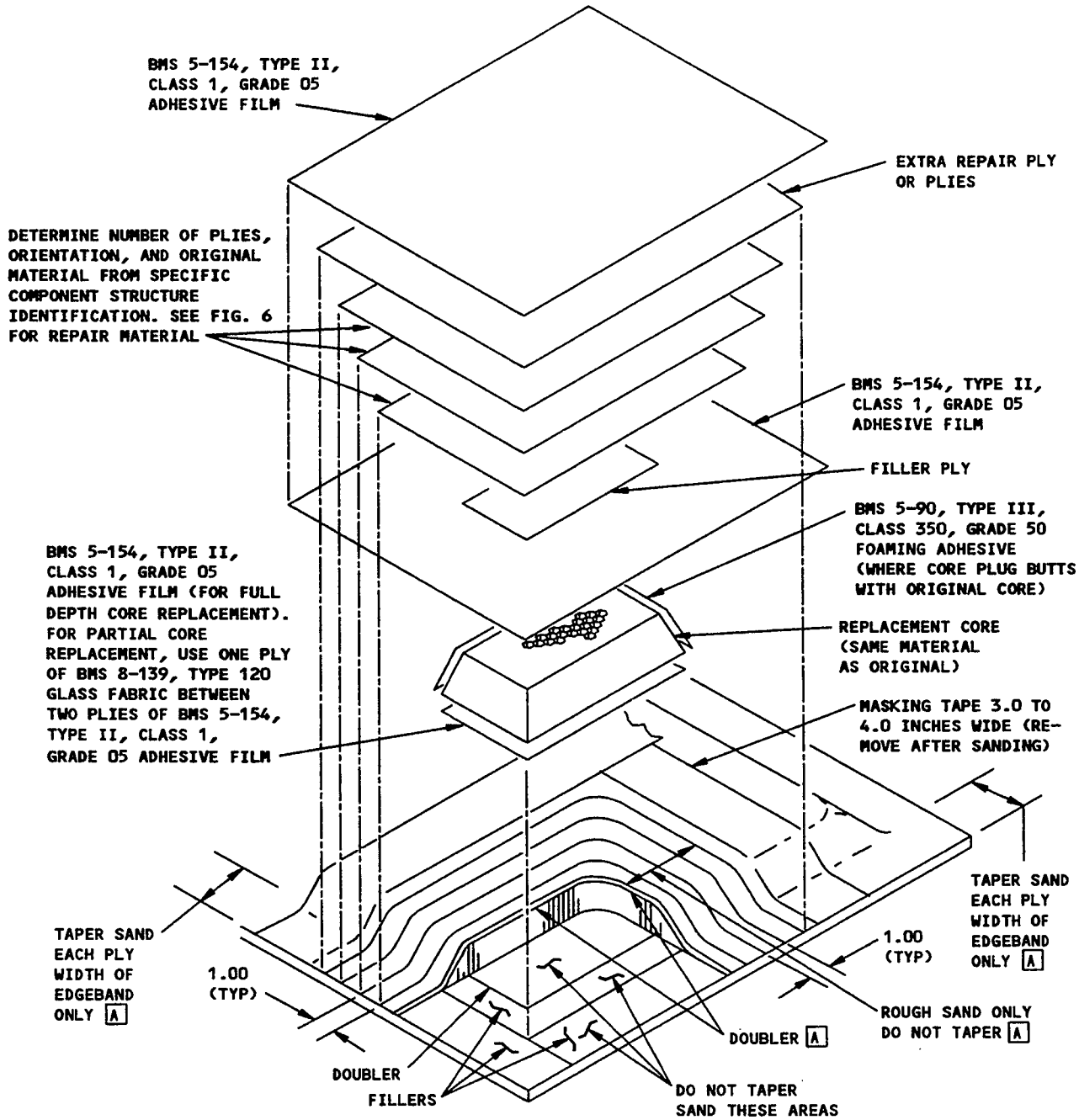

NOTE

A DO NOT TAPER SAND SKIN OR DOUBLER PLIES OVER CORE

Repair 8 - Repair of Damage to Honeycomb Core on Edge of Honeycomb Panel
Figure 15

141959

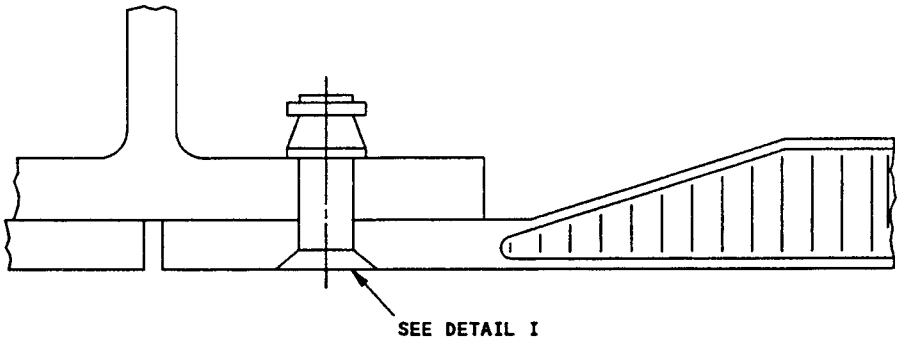

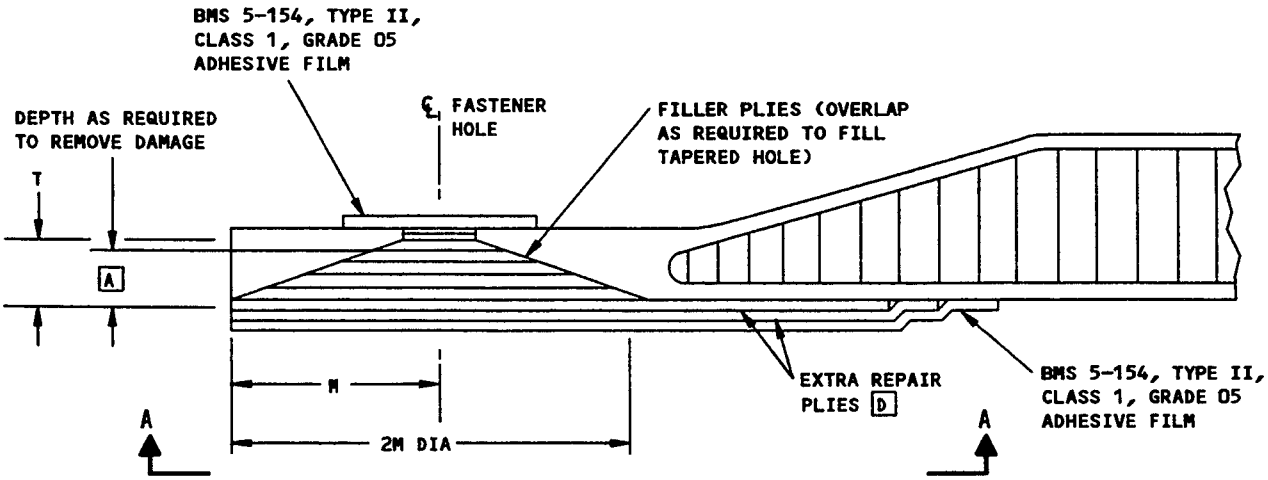

REPAIR OF HONEYCOMB PANEL SHOWN
REPAIR OF SOLID LAMINATE PANEL SIMILAR

DETAIL I

NOTES

- M = 5T MAXIMUM AS SHOWN, WHERE T IS THE THICKNESS OF THE EDGEBAND. DO NOT CUT INTO CORE
- THIS REPAIR APPLIES ONLY WHERE NO MORE THAN TWO ATTACH HOLES ARE DAMAGED IN ANY TEN CONSECUTIVE ATTACH HOLES
- D EQUALS FASTENER DIAMETER

A APPLY FILLER PLIES AS REQUIRED TO FILL THE DAMAGED AREA

B EXTEND EXTRA REPAIR PLY FAR ENOUGH SO THAT IT EXTENDS AT LEAST 0.50 INCH PAST EDGE OF DAMAGED AREA

C EXTEND EXTRA REPAIR PLY FAR ENOUGH TO PROVIDE AT LEAST 2D EDGE MARGIN

D ORIENT EXTRA REPAIR PLIES IN THE SAME DIRECTION AS THE ORIGINAL OUTER LAYER

Repair 9 - Repair of Damaged Panel Attach Hole in Honeycomb Panel Edgebands or Along Edges of Solid Laminate Panels
Figure 16 (Sheet 1)

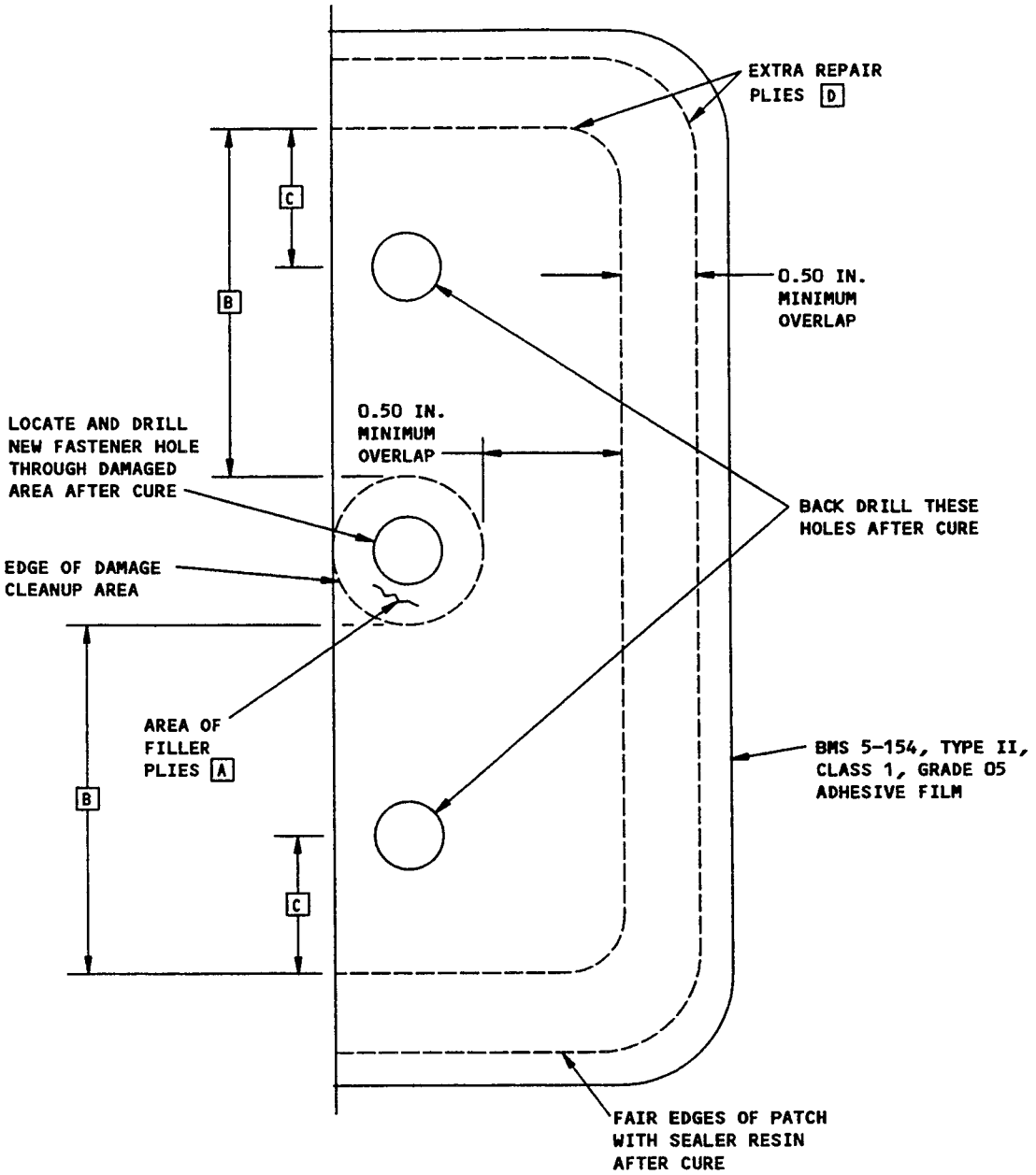

SECTION A-A

Repair 9 - Repair of Damaged Panel Attach Hole in Honeycomb Panel Edgebands or Along Edges of Solid Laminate Panels
Figure 16 (Sheet 2)

141967

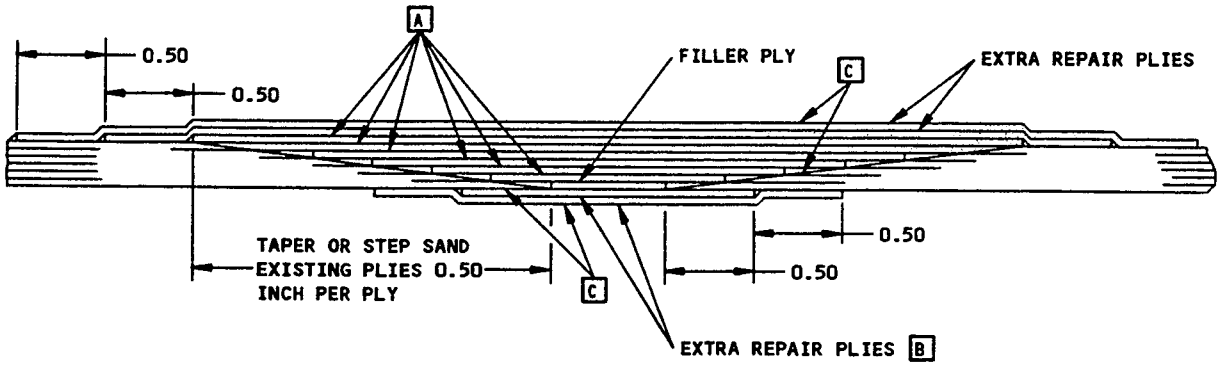

NOTES

A DETERMINE NUMBER OF PLIES, ORIENTATION, AND ORIGINAL MATERIAL FROM SPECIFIC COMPONENT STRUCTURE IDENTIFICATION. SEE FIG. 6 FOR REPAIR MATERIAL

B EXTRA REPAIR PLIES AT THIS LOCATION ARE REQUIRED ONLY IF THE DAMAGE PENETRATES THIS SURFACE

C PLACE ONE PLY OF BMS 5-154, TYPE II, CLASS 1, GRADE 05 ADHESIVE FILM OVER THE REPAIR AREA BEFORE APPLING THE REPAIR PLIES AND OVER THE LAST REPAIR PLY IN THE PATCH. THE ADHESIVE FILMS ARE TO BE 1/8 INCH LARGER THAN THE LARGEST REPAIR PLY IN THE PATCH

Repair 11 - Repair of Damage, Greater than 0.50-inch Diameter, to Solid Laminates
Figure 17

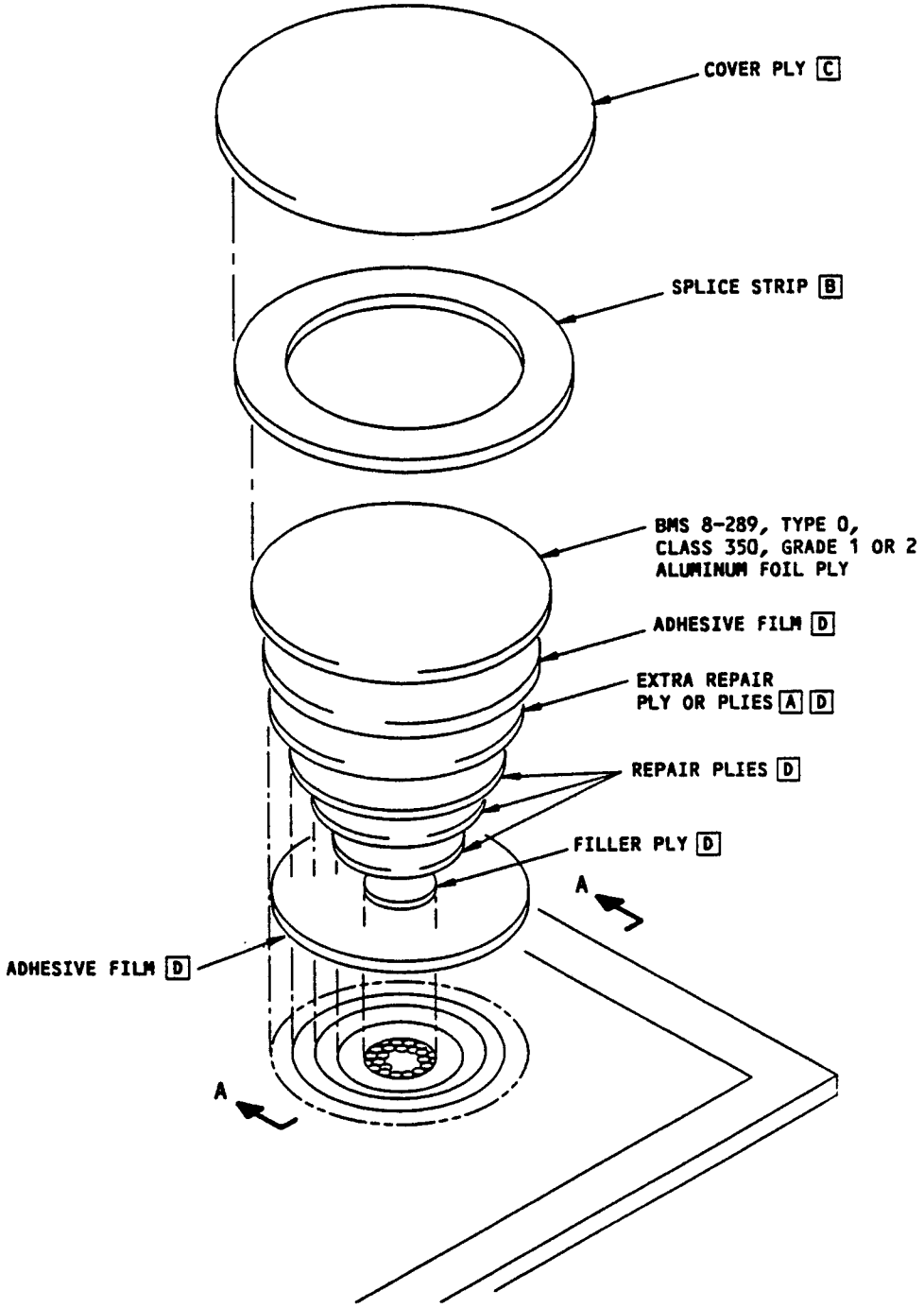

REPAIR PLY LAYUP
DETAIL I

Repair 13 - Repair of BMS 8-289 Aluminum Foil
Figure 18 (Sheet 1)

141973

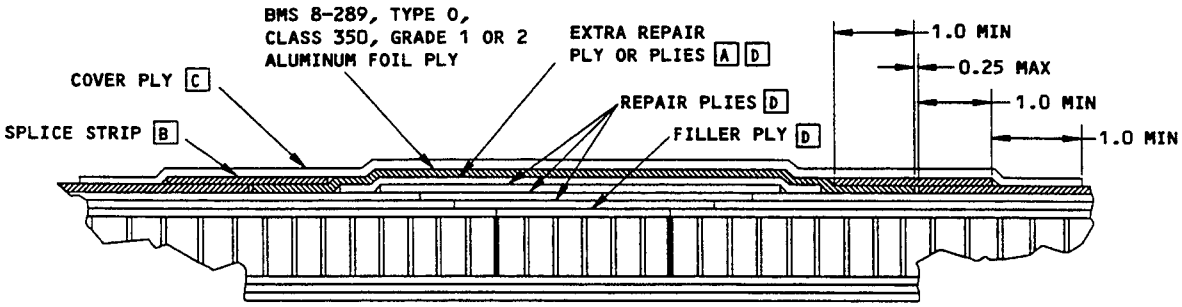

SECTION THRU REPAIR
SECTION A-A

NOTES

A THE ALUMINUM FOIL PLY MUST BE BONDED TO A GLASS FABRIC PLY. IF THE EXTRA REPAIR PLY IS NOT GLASS FABRIC, THEN AN ADDITIONAL PLY OF BMS 8-139, TYPE 120 GLASS FABRIC MUST BE INSTALLED AS THE OUTERMOST PLY

B BMS 8-289, TYPE O, CLASS 350, GRADE 1 OR 2 WITH THE ADHESIVE SIDE UP OR ETCH-TREATED ALUMINUM

C BMS 8-289, TYPE O, CLASS 350, GRADE 1 OR 2 WITH THE ADHESIVE SIDE DOWN OR BMS 5-154, TYPE II, CLASS 1, GRADE 03 ADHESIVE FILM

D SEE APPLICABLE REPAIR PER PAR. 3.A., 3.C. THRU 3.E., 3.G. THRU 3.I, OR 3.K. FOR APPLICATION OF THESE PLIES

Repair 13 - Repair of BMS 8-289 Aluminum Foil
Figure 18 (Sheet 2)

GRAPHITE, ARAMID, AND GRAPHITE/ARAMID/GLASS FABRIC HYBRID REINFORCED EPOXY LAMINATES AND NONMETALLIC HONEYCOMB SANDWICH REPAIRS - 200°F (93°C) TO 230°F (110°C) CURE WET LAYUP REPAIR METHOD

1. General

A. These repairs will not have an effect on a Structurally Significant Item (SSI) given in SRM 51-00-4, Fig. 3. Thus, no change to the Supplemental Structural Inspection Document (SSID) inspection program is necessary.

WARNING: SOME EQUIPMENT USED FOR HEAT CURING REPAIRS MAY CONSTITUTE A FIRE OR EXPLOSION HAZARD WHEN USED IN THE VICINITY OF AN AIRPLANE WHICH CONTAINS, OR HAS CONTAINED FUEL. CONSULT THE LOCAL FIRE DEPARTMENT FOR AUTHORITY TO USE SPECIFIC EQUIPMENT. NONCOMPLIANCE COULD CAUSE PERSONNEL INJURY.

BREATHING VAPORS OR ALLOWING SOLVENT TO CONTACT SKIN OR EYES IS HAZARDOUS. WEAR NEOPRENE GLOVES WITH COTTON LINERS, PROTECTIVE CLOTHING, AND EYE GOGGLES. IF CHEMICAL CONTACT OCCURS, WASH THOROUGHLY WITH WATER. IF CHEMICAL SHOULD SPLASH INTO EYES, FLUSH EYES WITH LARGE QUANTITIES OF WATER AND SEEK MEDICAL AID. USE MECHANICAL VENTILATION OR RESPIRATORY PROTECTION WHEN WORKING IN A CONFINED SPACE OR AREA.

DO NOT BREATHE CARBON FIBER DUST MAKE SURE THAT THERE IS A GOOD FLOW OF AIR WHERE YOU DO THE WORK. USE EQUIPMENT TO HELP YOU BREATHE WHEN YOU WORK IN A CONFINED SPACE. USE A VACUUM NEAR THE SOURCE OF THE DUST TO REMOVE THE DUST FROM THE AIR. IF YOU DO NOT OBEY, YOU CAN CAUSE INJURY.

CAUTION: FASTENERS INSTALLED IN GRAPHITE COMPOSITE STRUCTURE MUST BE BARE OR BMS 10-85 COATED TITANIUM, OR CORROSION RESISTANT STEEL. CADMIUM PLATED CORROSION RESISTANT STEEL MAY ALSO BE USED ALUMINUM OR ALLOY STEEL FASTENERS ARE NOT ALLOWED IN GRAPHITE COMPOSITE STRUCTURES.

WHEN REINSTALLING ALUMINUM FITTINGS ON GRAPHITE COMPOSITE STRUCTURE, ENSURE THAT THE ORIGINAL CORROSION PROTECTIVE TREATMENT IS MAINTAINED. INSTALL FITTINGS WITH FAYING SURFACE SEAL USING BMS 5-26 IN FUEL TANK AREAS OR BMS 5-95 IN ALL OTHER AREAS.

TEMPERATURES ABOVE 260°F (127°C) MUST NOT BE APPLIED TO AREAS SEALED WITH BMS 5-95 SEALANT, UNLESS SEALANT CAN BE REPLACED FOLLOWING REPAIR.

TEMPERATURES ABOVE 250°F (121°C) MUST NOT BE APPLIED TO AREAS SEALED WITH BMS 5-26 SEALANT, UNLESS SEALANT CAN BE REPLACED FOLLOWING REPAIR.

DO NOT LET CARBON FIBER DUST GO INTO ELECTRICAL EQUIPMENT CARBON FIBER DUST IS ELECTRICALLY CONDUCTIVE AND IT CAN CAUSE SHORT CIRCUITS IF IT GOES INTO ELECTRICAL EQUIPMENT USE A VACUUM NEAR THE SOURCE OF THE DUST TO REMOVE THE DUST FROM THE AIR. IF YOU DO NOT OBEY, YOU CAN CAUSE DAMAGE TO THE ELECTRICAL EQUIPMENT.

BOEING PROPRIETARY - Copyright © - Unpublished Work - See title page for details.

B. This subject contains repairs to components made from epoxy resin reinforced with several layers of graphite tape or fabric, aramid fabric or a combination of graphite tape or fabric, aramid fabric and glass fabric (hybrids). The most common construction is a sandwich of two laminated skins separated by a nonmetallic honeycomb core. Solid laminate is used for small components, honeycomb panel edgebands, some primary and secondary structure, and at fitting locations. Repairs described herein use hand-impregnated composite material (wet layup).

CAUTION: TO GET AN ACCEPTABLE QUALITY REPAIR, DO AS FOLLOWS:

- REFER TO THE APPLICABLE COMPONENT WHICH YOU ARE GOING TO REPAIR FOR THE REPAIR LIMITS AND MATERIAL OF THE COMPONENT BEFORE YOU USE THESE REPAIR INSTRUCTIONS.
- USE THE CORRECT MATERIALS FOR THE TYPE OF COMPONENT AND REPAIR THAT IS MADE.
- USE THE MATERIALS THAT AGREE WITH THE SPECIFICATIONS IN THE SRM.
- ACCURATELY FOLLOW THE SRM PROCEDURES AT EACH STEP OF THE REPAIR. IF YOU DO NOT DO THIS, IT CAN CAUSE A REPAIR THAT IS NOT SATISFACTORY AND NOT APPROVED.

C. Specific allowable damage, repair limitations, and repair data, can be found in the section/subject associated with each structural component.

D Use suitable chapter/ holding fixtures for large repairs to prevent distortion of the structure.

E. Perform the repair procedures specified herein only in areas of reasonable cleanliness. Areas containing oil mist, exhaust fumes, gases, soot, rain, dust, or other particulate matter are specifically prohibited.

F. Protect surfaces from contamination. Do not touch cleaned parts or adhesive with bare hands. Use clean white gloves when handling parts.

G. Store resin and/or adhesive material at 40°F (5°C) to 80°F (27°C) in sealed containers. An identification label must accompany the material inside the bag, with the following information: BMS Type, Class, grade, supplier name, batch number, and date of preparation.

H. Refer to SRM 51-20-00 for source of repair materials and equipment.

I. Refer to SRM 51-10-07 for hole drilling and machining of composite structure.

BOEING PROPRIETARY - Copyright © - Unpublished Work - See title page for details.

J. Refer to SRM 51-70 for aerodynamic smoothness requirements.

K. See Fig. 1 for repair index

L. See Fig. 2 for resin mixes and potting compound data.

2. Repair Procedures Common to Various Repairs

A. Determine Damage

CAUTION: DO NOT USE CHEMICAL PAINT STRIPPERS TO REMOVE PAINT BEFORE MAKING DAMAGE EVALUATIONS. DAMAGE TO THE ADHESIVE RESIN SYSTEM WILL OCCUR.

(1) Examine visually for extent of damage.

(2) Check part in vicinity of damage for entry of water, oil, fuel, dirt or other foreign matter. Water can be detected by radiographic or thermographic methods. Remove contaminants. Refer to par. 2.B. for water removal instructions.

BOEING PROPRIETARY - Copyright © - Unpublished Work - See title page for details.

2. A. (3) Check for delamination around the damage.

NOTE: Delamination can be detected by instrumental NDI methods or by tap test. For the tap test, use a solid metal disk and tap the repair area lightly but firmly. Void areas will give a dull sound. Solid bonded areas will give a sharp ring. Refer to Part 1 of the Nondestructive Test Manual.

B. Remove Water from Damaged Area.

(1) Remove water from honeycomb sandwich (Fig. 3).

(a) Remove damaged skin plies to open up honeycomb area in the damaged area. Remove standing water using vacuum and oil-free compressed air.

(b) Sand the core to remove the adhesive. Removal of adhesive fillets on core is not required.

(c) Apply screen over exposed core.

(d) Apply a thermocouple to the center of the screen.

(e) When opposite face is accessible, apply thermocouple to the opposite side of honeycomb sandwich panel.

(f) When opposite face is accessible, apply heating blanket to opposite side of honeycomb sandwich panel.

NOTE: When opposite face is accessible, it is acceptable to heat the area using a heating blanket only on the opposite face. An additional heating blanket and vacuum application may be used on the near face at the location shown in Fig. 3. Additional heating blanket accelerates water removal. When opposite face is inaccessible, use of a heating blanket on the near side is required.

(g) When opposite face is inaccessible or when using additional heating blanket, perform the following steps:

1) Apply a layer of glass fabric bleeder cloth over the screen and hold in place with masking tape.

2) Apply a thermocouple to the center of the bleeder cloth. Place a vacuum line on the edge of the bleeder cloth and hold in place with masking tape.

3) Place the heating blanket over the bleeder cloth.

(h) Place extruded sealing compound around the entire area and seal the area with vacuum bag material.

(i) Evacuate the layup to vacuum of 22 inches of mercury minimum.

(j) Heat the area for 1 hour minimum at 150°F (66°C) to 170°F (77°C). The rate of temperature rise must not exceed 5°F (3°C) per minute.

(k) Remove layup materials and proceed with repair procedure.

(2) Remove water from solid laminate.

(a) Remove damage and/or delaminated skin. Remove standing water using vacuum or oil-free compressed air.

(b) Heat the area for 1 hour minimum at 150F (66°C) to 170°F (77°C). The rate of temperature rise must not exceed 5°F (3°C) per minute.

C. Remove and Prepare Damaged Area

(1) Damage removal.

(a) Trim out the damaged lamination to a smooth shape with rounded corners, or a circular or oval shape. Take care not to damage the undamaged plies, core, or surrounding material.

NOTE: Remove only damaged plies, damaged doublers, and damaged fillers.

(b) When the core is also damaged, remove the core by trimming to the same outline as the skin. The core area removed should extend at least 0.50 inch further than visible core damage limits. Take care to avoid cutting into an undamaged skin on the opposite side. In cores greater than 1.00 inch thick, partially remove core (at least 0.5 inch deep) sufficient to clean up damage.

(c) In areas where contamination cannot be removed by cleaning or drying per par. 2.B., remove the contaminated structure along with the other damage.

(d) When opposite inner skin is also damaged, trim out the damage to a smooth shape as described in par. 2.C.(1)(a).

(e) When core is removed from inner surface of opposite skin, carefully smooth core down to adhesive film.

(f) Inspect cut out area to ensure that all damage has been removed.

CAUTION: SANDING FOR ADHESION OR FINISH REMOVAL MUST NOT EXPOSE OR DAMAGE FILAMENTS IN THE UNTAPERED SURFACE REPAIR AREA.

SANDING MUST NOT EXPOSE OR DAMAGE FILAMENTS IN EACH PLY WHEN STEP SANDING OR IN THE PLY BONDED TO THE CORE (FIG. 4).

LOSS OF STRUCTURAL STRENGTH OF THE COMPONENT WILL OCCUR IF THESE CAUTIONS ARE NOT OBSERVED.

DO NOT USE PAINT STRIPPERS FOR THE REMOVAL OF FINISH. DAMAGE TO THE ADHESIVE RESIN SYSTEM WILL OCCUR.

2.C.(2) Preparation of damaged area (Fig. 4).

(a) Determine the number of plies that have been cut. Mask off area around the cutout allowing 0.50 or 1.00 minimum for each repair ply and extra repair ply. Some components in heat-affected zones repaired with 200°-230°F (93°-110°C) cure temperature resins require 1.00 for each repair ply and are identified in the component repair charts. All other components require 0.50 allowance for each repair ply.

NOTE: Where the number of plies is not apparent, refer to the applicable component structure identification of engineering drawing.

WARNING: SANDING GIVES OFF A FINE DUST THAT MAY CAUSE SKIN IRRITATIONS. BREATHING OF AN EXCESSIVE AMOUNT OF THIS DUST MAY BE INJURIOUS. OBSERVE PRECAUTIONS FOR SKIN AND RESPIRATION PROTECTION.

AIR-POWERED EQUIPMENT MUST BE USED WHERE THE POSSIBILITY OF VAPOR IGNITION EXISTS. NONCOMPLIANCE COULD CAUSE PERSONNEL INJURY.

(b) Internal surface of part (nonaerodynamic surface) and noncritical aerodynamic surfaces.

1) Remove the paint finish or Tedlar film in the masked off area using No. 240 or finer Scotch-Brite abrasive, or No. 150 or finer sandpaper.

2) Taper or step sand each ply or simply abrade by rough sanding around the cleaned up damage a minimum of 0.50 or 1.00 inch per ply (Ref par. 2.C.(2)(a)).

3) An optional procedure for two or three ply laminate face sheets is to fill the cleaned up damage area flush with the original surface using filler plies during the repair layup. The repair plies are then installed directly on the resulting smooth surface of the repair area.

4) Abrade surfaces around repair using No. 240 or finer, Scotch-Brite abrasive.

(c) External surface of part (critical aerodynamic surfaces).

1) Taper sand a uniform taper around the cleaned up damage using No. 80 sandpaper. The taper is to be over a minimum distance of 0.50 or 1.00 inch for each existing ply of the laminate. Refer to par. 2.C.(2)(a) to determine the required distance. Step sanding per par. 2.C.(2)(b)2) may be done instead of taper sanding. Refer to 51-70 for locations of areas of critical aerodynamic smoothness. Taper sanding must always be done on solid laminate structures.

NOTE: For sanding, use a flexible disk sander, a belt sander, a rotating pad sander, or sand by hand.

2) Remove exterior finishes, including enamel finish and conductive coating from the surfaces around repair using No. 150 or finer sandpaper.

(d) Edgeband of panel.

1) Taper sand panel edgeband according to par. 2.C.(2)(c).

NOTE: Edgeband is the solid laminate around the outer periphery of the honeycomb panel.

(e) Cleaning of repair area.

1) Remove all sanding dust using oil-free compressed air.

WARNING: KEEP SOLVENTS AWAY FROM SOURCES OF HEAT, FIRE, OR SPARKS. HEAT, FIRE, OR SPARKS CAN CAUSE AN EXPLOSION.

AVOID CONTACT OF SOLVENT WITH SKIN, EYES, AND CLOTHING. WEAR EYE PROTECTION AND USE MECHANICAL VENTILATION OR RESPIRATORY PROTECTION WHEN WORKING IN A CONFINED SPACE OR AREA. BREATHING VAPORS OR ALLOWING SOLVENT TO CONTACT SKIN OR EYES IS HAZARDOUS.

CAUTION: DO NOT IMMERSE PARTS IN TRICHLOROETHANE SOLVENT OR ALLOW STANDING SOLVENT ON PART. DAMAGE TO PART WILL OCCUR.

2) Wipe surfaces with a clean cloth moistened with MIBK (methyl isobutyl ketone), MEK (methyl ethyl ketone), or acetone. Allow solvent to evaporate before proceeding with the repair.

D. Fabricate, Clean, and Install Honeycomb Replacement Core Plug

(1) Fabricate core plug.

(a) Fabricate core plug from core called out on engineering drawing. Refer to specific component structural identification subject to determine type of core called out on engineering drawing.

(b) For butt splicing, the honeycomb core plug should fit flush with original core and with ribbon direction the same as in original core. The replacement core must overlap and make intimate contact with the cell walls of surrounding core material.

(c) Trim core plug to full or partial depth of original core (par. 2.C.(1)(b)).

NOTE: When applicable, depth of core plug should allow for shrinkage during cure and for thickness of extra plies of fabric cloth between core plug and undamaged core or skin.

(2) Clean core plug.

WARNING: KEEP SOLVENTS AWAY FROM SOURCES OF HEAT, FIRE, OR SPARKS. HEAT, FIRE, OR SPARKS CAN CAUSE AN EXPLOSION.

AVOID CONTACT OF SOLVENT WITH SKIN, EYES, AND CLOTHING. WEAR EYE PROTECTION AND USE MECHANICAL VENTILATION OR RESPIRATORY PROTECTION WHEN WORKING IN A CONFINED SPACE OR AREA. BREATHING VAPORS OR ALLOWING SOLVENT TO CONTACT SKIN OR EYES IS HAZARDOUS.

CAUTION: DO NOT EXCEED IMMERSION CRITERIA GIVEN IN PAR. 2.D.(2)(a). DAMAGE TO CORE MATERIAL WILL OCCUR.

DO NOT IMMERSE PARTS IN TRICHLOROETHANE SOLVENT OR ALLOW STANDING SOLVENT ON PART. DAMAGE TO PART WILL OCCUR.

(a) Clean visually contaminated core by dipping (a maximum of four times) in an MIBK, MEK or acetone bath for 60 seconds.

(b) Locally contaminated areas can be washed with MIBK, MEK or acetone.

(c) The core must be completely dry, clean, and free of evidence of solvents before installation.

WARNING: BREATHING VAPORS OR ALLOWING RESIN COMPONENTS TO CONTACT SKIN OR EYES IS HAZARDOUS. WEAR PROTECTIVE CLOTHING AND EYE GOGGLES. NEOPRENE GLOVES WITH COTTON LINERS SHOULD BE USED FOR HAND PROTECTION. GLOVES AND LINERS SHOULD BE USED FOR A MAXIMUM OF 2 HOURS AND DISCARDED. HANDS SHOULD BE WASHED WITH SOAP AND WATER IMMEDIATELY AFTER REMOVAL OF GLOVES AND LINERS. IF GLOVES NEED TO BE REMOVED DURING USE OR A PUNCTURE IS SUSPECTED THEY SHOULD BE REPLACED WITH NEW GLOVES AND COTTON LINERS. IF CHEMICAL CONTACT OCCURS WASH THOROUGHLY WITH WATER. IF CHEMICAL SHOULD SPLASH INTO EYES, FLUSH EYES WITH LARGE QUANTITIES OF WATER AND SEEK MEDICAL AID. USE MECHANICAL VENTILATION OR RESPIRATORY PROTECTION WHEN WORKING IN A CONFINED SPACE OR AREA.

(3) Install core plug.

(a) If one skin is undamaged and for full core depth replacement, apply 2 plies of BMS 9-3, type H-2 or H-3 or 4 plies of BMS 9-3, type D glass fabric saturated with Resin Mix 2 per par. 2.E. in the core cavity. Orientation is optional.

(b) If one skin is undamaged and for partial core replacement, apply Resin Mix 3 to the face of the undamaged core in the core cavity. Then apply 2 plies of BMS 9-3, type H-2 or H-3 or 4 plies of BMS 9-3 type D glass fabric saturated with Resin Mix 2 per par. 2.E. in the core cavity. Orientation is optional.

(c) If both skins are damaged, apply a caul plate against the exterior surface of the farside skin and tape in place.

(d) Apply a uniform coat of Resin Mix 1 on the edges of the replacement core plug and the undamaged core that will mate when the plug is installed. Apply Resin Mix 3 to the lower face of the replacement core plug. Insert the replacement core plug into the core cavity. Orient the ribbon direction to align with the original core ribbon.

(e) Put the layup materials and equipment in place per Fig. 5. If the damage extends through both skins and access is available, put layup materials and equipment on both sides of the part using the layup shown in Fig. 5.

NOTE: A heat lamp may be used in lieu of a heat blanket to gel the core bonding and potting resins. See Fig. 9 for heat lamp temperature curve.

(f) Evacuate the repair area to a vacuum of 22 inches of mercury minimum.

(g) Check the vacuum bag for leak paths.

(h) Cure per Fig. 8 at the temperature specified in the specific component structural repair subject.

NOTE: Monitor bondline temperatures throughout the cure. Failure to reach the necessary cure temperature for the specified cure period is cause for rejection of the repair.

Gelation of the potting resin will occur after 20 minutes at 150°F (66°C). After gelation period of 20 minutes, the heat may be turned off to allow core sanding and application of repair plies. The skin-to-core bonding plies can then be cured concurrently with the skin repair plies at the required cure temperature.

(i) Allow the repair area to cool under vacuum until the temperature of the repair area is 140°F (60°C) or less. Then release restraints (if applicable) and remove layup materials and equipment.

(j) Sand core plug approximately flush with surrounding material, making allowance for slight core crush during cure of repair plies.

(k) Remove all sanding dust using oil-free compressed air.

NOTE: The above procedure is based on the core plug installation being cured separately from the repair plies. As an option, core plug installation and repair plies may be cured at the same time. When this option is used, ensure that temperature on both sides of panel is equal by using thermocouples on both sides of panel.

CAUTION: USE OF PRECURED PATCHES IS NOT RECOMMENDED. PRECURED PATCHES BONDED TO THE STRUCTURE UNDER VACUUM PRESSURE ONLY AND LARGE PRECURED PATCHES BONDED TO CONTOURED SURFACES CAN RESULT IN POROUS OR NON-CONTINUOUS BONDLINES.

E. Prepare and Apply Repair Plies

NOTE: Aramid fabric, aluminum foil/glass fabric (BMS 8-289, Type 120), and aluminum coated glass fabric (BMS 8-278) will be repaired using glass fabric plies. See Fig. 6 for substitution of glass fabric for aramid fabric, aluminum foil/glass fabric, or aluminum coated glass fabric.

(1) Prepare repair plies.

(a) Refer to the specific component structure identification to determine the number, orientation, and material of plies used in the original structure.

(b) See Fig. 6 for repair ply material and substitution of repair ply material. No substitutes are permitted for graphite repair plies.

(c) Refer to the specific component structural repair subject for extra repair ply requirements.

(d) See Fig. 7 for extra repair ply material.

(e) See Fig. 4 for overlap requirements.

(f) From each type of material required, cut a piece that is large enough for cutting the required number of plies for the repair patch. In the patch, use one repair ply of fabric for each damaged ply of fabric in the original laminate, use the number of graphite fabric repair plies required per Fig. 6 for each damaged ply of graphite tape in the original laminate, plus extra repair plies as specified in the specific component structural repair subject. If extra repair plies are not specified in the specific component structural repair subject, one extra repair ply is required per Fig. 7. Each repair ply must have the same orientation as the corresponding original fabric ply being replaced. When repairing graphite tape with graphite fabric, see Fig. 6 for repair ply orientation. The orientation of the outermost extra repair ply is to be ±45 degrees with respect to the ply orientation convention given in the specific component structural identification. The orientation of the inner extra repair ply (if required) is to be 0 or 90 degrees with respect to the ply orientation convention given in the specific component structural identification. If a filler ply is required, use the same material as adjacent repair ply and orientation is optional.

(2) Impregnate repair plies with resin.

(a) Cut two pieces of parting film approximately 3.0 inches larger all around than the fabric and tape down one piece to a smooth surface.

NOTE: Use teflon film or other parting films.

(b) Lay fabric onto parting film.

(c) Spread Resin Mix 2, prepared as shown in Fig. 2, to adequately cover fabric evenly.

(d) Cover the fabric on the parting film with the second piece of parting film.

(e) Work resin thoroughly and evenly into fabric with squeegee or roller in order to impregnate the fabric and to remove entrapped air.

(f) Work excess resin to edges of fabric such that fabric weave is barely visible.

NOTE: Resin content of the impregnated fabric should be 55 ± 5 percent by weight.

(g) Cut the impregnated fabric to the required sizes for each individual ply of the patch. The parting film on both sides of the fabric decreases fraying of the edges while cutting the fabric.

NOTE: The total number of repair plies is to be in accordance with par. 2.E.(1). Refer to Fig. 4 for required overlap of repair plies. Each repair ply must have the same orientation as the original ply. The orientation of the outermost extra repair ply is to be ±45 degrees with respect to the ply orientation convention given in the specific component structural identification. The orientation of the inner extra repair ply (if required) is to be 0 to 90 degrees with respect to the ply orientation convention given in the specific component structural identification. When repairing graphite tape with graphite fabric, see Fig. 6 for repair ply orientation. The orientation of the filler ply is optional.

(3) Apply repair plies.

CAUTION: ENSURE THAT PARTING FILM IS REMOVED FROM REPAIR PLIES PRIOR TO LAYUP AND CURING. NONCOMPLIANCE WILL RESULT IN A RUINED REPAIR.

NOTE: Where the damage has occurred at a lap joint in the original laminates, it is not necessary to make a comparable lap in the repair plies. Where the original core was undamaged and was provided with a recess to match the lap joint, the recess should be filled with filler plies before application of the repair plies.

(a) If honeycomb core is exposed, thoroughly coat face of exposed honeycomb core with Resin Mix 3 just prior to applying repair plies. Use of roller for resin application is recommended.

(b) Remove parting film from one side of the smallest ply of the patch and place the exposed face against the repair area with the proper orientation.

(c) Use a squeegee over the parting film that covers the patch to remove wrinkles and entrapped air. Do not apply excessive pressure. Excessive pressure will produce a patch deficient in resin.

(d) After removing parting film from the contact faces, place the next larger size ply of the impregnated patch over the ply on the repair area with proper orientation and with overlap all around per Fig. 4.

(e) Place succeeding plies of the patch as described in steps (c) and (d).

F. Layup/Bagging Procedure (Fig. 5)

(1) Secure three thermocouples (spaced evenly around repair) to the panel at the edge of the repair and secure them to the appropriate recorders.

(2) Place a layer of perforated FEP parting film (1 mil thick) over the repair. Cut the FEP so that the edges extend 3 inches beyond the edge of the repair patch.

(3) Place a layer of dry peel ply or Style 120 glass fabric (or equivalent thickness glass fabric) over the perforated FEP as a surface bleeder. Cut the surface bleeder so that the edges extend 2 inches beyond the edge of the perforated FEP.

(4) Place a layer of solid FEP parting film (2 mils thick) over the surface bleeder. Cut the solid FEP so that the edges are even with the edge of the perforated FEP.

(5) Place a layer of Airweave SS or Style 120 glass fabric over the solid FEP as a surface breather. Cut the surface breather so that the edges extend to the edge of the surface bleeder. Make certain the surface breather makes contact with the surface bleeder along the edges.

(6) Secure a vacuum line on the edge of the surface breather.

WARNING: USE HEAT CURING EQUIPMENT THAT IS ACCEPTABLE TO LOCAL FIRE PROTECTION AUTHORITIES. FAILURE TO COMPLY COULD CAUSE PERSONNEL INJURY.

(7) If a heat blanket is used as a heat source, perform the following steps:

NOTE: A heat blanket, infrared heat lamp, or equivalent heat source may be used to cure the repair.

If the repair is made on a structure too small to allow the heat blanket to be vacuum bagged, proceed to step (8) and place heat blanket over the vacuum bag.

(a) Place a heat blanket over the surface breather. The heat blanket must extend a minimum of 2 inches beyond the repair patch edges.

NOTE: When using a heat blanket larger than 12 inches on one side, an aluminum caul plate (0.016 inch thick) can be used under the heat blanket to minimize localized heating. Make the caul plate slightly smaller than the surface breather.

(b) Place controlling thermocouple over the center of the heat blanket.

2. F. (7) (c) Place 4 to 6 layers of glass fabric over the heat blanket. The glass fabric will insulate the heat blanket and prevent damage to the bagging film.

(8) Apply extruded sealing compound around the entire repair area, approximately 6 inches outside the edge of the heat blanket.

CAUTION: HOLLOW COMPOSITE COMPONENTS SUCH AS RUDDERS, ELEVATORS, AND AILERONS MUST NOT BE COMPLETELY VACUUM BAGGED BECAUSE THEY MAY COLLAPSE UNDER 22 INCHES OF MERCURY VACUUM. ATTACH THE VACUUM BAG TO ONE SIDE OF COMPONENT ONLY OR ATTACH SEPARATE VACUUM BAGS TO EACH SIDE TO ENSURE THAT ATMOSPHERIC PRESSURE INSIDE OF COMPONENT IS MAINTAINED DURING REPAIR. COMPONENTS CONSISTING OF A SINGLE PANEL MADE OF FULL DEPTH HONEYCOMB CORE WITH LAMINATE FACE SHEETS AND EDGEBANDS MAY BE COMPLETELY VACUUM BAGGED (FIG. 21).

(9) Lay a piece of vacuum bag material over the entire repair area, sealing the edge with the extruded sealing compound. Pleat the vacuum bag where needed to prevent bridging of bag material and subsequent bag breakage. Pad all sharp objects and corners to prevent bag breakage. It is optional to vacuum bag the entire part.

NOTE: The entire part must be vacuum bagged and restrained in place to prevent delamination and distortion when the repair area exceeds 15% of panel area. Regardless of the method of heat application, restraining devices that maintain the contour and support the part must be used for large parts where sagging and distortion could occur due to the weight of the part.

(10) Evacuate the space under the vacuum bag and maintain a vacuum of 22 inches of mercury minimum.

NOTE: Maintain a vacuum of 22 inches of mercury minimum during entire cure cycle.

(11) Check the vacuum bag for leak paths.

(12) Cure the repair per par. 2.G.

B98475

WARNING: USE HEAT CURING EQUIPMENT THAT IS ACCEPTABLE TO LOCAL FIRE PROTECTION AUTHORITIES. FAILURE TO COMPLY COULD CAUSE PERSONNEL INJURY.

CAUTION: SURFACE TEMPERATURE MUST NOT EXCEED CURE TEMPERATURE SPECIFIED IN THE COMPONENT REPAIR CHART. DAMAGE OR DISTORTION OF STRUCTURE MAY OCCUR IF TEMPERATURE EXCEEDS THAT SPECIFIED.

2.G. Cure the Repair

NOTE: Determination of the temperature must be made by using thermocouples placed at edge of the outermost ply in the repair patch.

In honeycomb panels, for repairs to both skins or single skin and partial depth core replacement using a septum, thermocouples must be located on both repair surfaces to monitor cure temperatures.

When using a hot bond repair console, consult manufacturer's operating instructions.

(1) Raise the temperature at a maximum rate of 2°-8°F (1°-4°C) per minute to follow the cure cycle temperature-time profile in Fig. 8. Cure per Fig. 8 at the temperature specified in the specific component structural repair subject. Determine cure temperature from thermocouple at the edge of the repair ply that has the lowest reading.

NOTE: Cure time does not include the time required for the mold and part to heat up to temperature. Cure time is the period after the part has reached that temperature.

(2) Cool down repair after cure period at a rate of 5°F (3°C) per minute maximum while still maintaining vacuum.

(3) When the repaired area has cooled to less than 125°F (52°C), release vacuum pressure and remove vacuum bagging materials and other layup materials.

H. Refinish After Repair

CAUTION: DO NOT SAND INTO ORIGINAL STRUCTURE. FAILURE TO COMPLY WILL REDUCE THE STRENGTH OF THE COMPONENT.

(1) Lightly sand edge of topmost repair ply as necessary to fair the edge. Sand surface of repair to produce a smooth finish without damaging fibers.

(2) Apply finish to the repaired surface using the following applicable methods.

(a) Where clear Tedlar film surfaces have been removed, seal with a brush coat of Resin Mix 5 (Fig. 2). Cure per Fig. 2.

(b) Where grey or white Tedlar film surfaces have been removed, seal with Resin Mix 5 (Fig. 2). Cure per Fig. 2 and apply one coat of BMS 10-11 primer and one coat of BMS 10-60 enamel (grey, BAC705; white, BAC7106).

(c) Where conductive surfaces have been removed, apply conductive finish according to Chapter 51 of the Maintenance Manual.

(d) Where the abrasion resistant teflon finish has been removed from the internal surface of the panel edgeband, reapply the finish according to Chapter 51 of the Maintenance Manual.

(e) Where the original painted surfaces have been removed, restore original finish according to Chapter 51 of the Maintenance Manual.

(f) Where aluminum foil (BMS 8-289) has been removed, aluminum flame spray per 51-40-9.

(g) Where sealant has been removed from around fittings or fay surfaces to facilitate repairs, reapply BMS 5-26 in fuel tank areas or BMS 5-95 in all other areas per drawing requirements or 51-10-02.

(h) Where aluminum foil areas have been damaged, repair per 51-40-17.

(i) Where aluminum coated glass fabric (BMS 8-278) has been repaired, aluminum flame spray per 51-40-9.

(j) Where repairs have been made to the exterior surfaces of panels containing aramid, apply sealant to the exterior surfaces per 51-20-04.

BOEING PROPRIETARY - Copyright © - Unpublished Work - See title page for details.

2. I. Perform Post Repair Requirements

(1) Make an inspection of the completed repair that was done to make sure that the repair is satisfactory. The inspection must include these areas:

- The area that was hot.

- A minimum width of 2 inches all around the area that was hot.

If a defective repair is indicated by the inspection, remove and install the repair again.

NOTE: Post repair inspection is recommended. Examples of inspection procedures are given in NDT Manual Part 1, 51-10-01. Other inspection methods that have been examined and found satisfactory by the airline can be used.

WARNING: FLIGHT SAFETY DEMANDS THAT CERTAIN CONTROL SURFACES BE PROPERLY BALANCED AT ALL TIMES.

(2) Following repair of control surface, balance must be checked to determine whether or not rebalancing is required. Rebalance as necessary per 51-80-00.

CAUTION: REPAIRS MADE TO CONTROL SURFACES AND/OR ADJACENT STRUCTURE MUST NOT INTERFERE WITH THE DESIGNED OPERATION OF THE CONTROL SURFACES. DAMAGE TO AIRPLANE STRUCTURE MAY OCCUR.

(3) Check all repairs for noninterference with operation of control surfaces. Ensure adequate clearances for all repaired parts.

CAUTION: REPAIRS MUST NOT COVER EXISTING DRAIN HOLES IN PANELS. WATER WILL ACCUMULATE IF DRAIN HOLES ARE COVERED.

(4) If the repair covers a drain hole, drill through the repair at existing location.

NOTE: Drain holes are usually 0.375-inch diameter. Refer to Chapter 51 of the Maintenance Manual.

CAUTION: TO GET AN ACCEPTABLE QUALITY REPAIR, DO AS FOLLOWS:

- REFER TO THE APPLICABLE COMPONENT WHICH YOU ARE GOING TO REPAIR FOR THE REPAIR LIMITS AND MATERIAL OF THE COMPONENT BEFORE YOU USE THESE REPAIR INSTRUCTIONS.

- USE THE CORRECT MATERIALS FOR THE TYPE OF COMPONENT AND REPAIR THAT IS MADE.

- USE THE MATERIALS THAT AGREE WITH THE SPECIFICATIONS IN THE SRM.

- ACCURATELY FOLLOW THE SRM PROCEDURES AT EACH STEP OF THE REPAIR. IF YOU DO NOT DO THIS, IT CAN CAUSE A REPAIR THAT IS NOT SATISFACTORY AND NOT APPROVED.

3. Typical Repairs

NOTE: These repairs apply to all graphite, aramid, and graphite/aramid/glass hybrid reinforced laminates and nonmetallic honeycomb sandwich components except radomes and floor panels.

See Fig. 1 for repair index.

A. Repair 1 - Repair of Damage to One Skin of Honeycomb Panel (Fig. 11)

(1) Determine damage per par. 2.A. Ensure that water and other contaminations are removed per par. 2.B.

(2) Cut away damaged plies per par. 2.C.(1). Do not remove any core.

(3) Prepare damaged area per par. 2.C.(2).

(4) Prepare and apply fabric repair plies per par. 2.E.

(5) Apply vacuum and cure per par. 2.F. and 2.G.

(6) Refinish the repair area per par. 2.H.

(7) Perform applicable post-repair requirements per par. 2.I. before returning the repaired component to flight service.

B. Repair 2 - Repair of Damage, 0.50-inch Diameter or Less, to One Skin and Honeycomb Core

(1) Repair this type of damage per Repair 2 of 51-40-12 except use Resin Mix 4 as described in 51-40-15, Figure 2.

C. Repair 3 - Repair of Damage, Greater than 0.50-Inch Diameter, to One Skin and Honeycomb Core (Fig. 12)

(1) Determine extent of damage according to par. 2.A.

(2) Remove all contamination and water from damaged area per par. 2.B. Area must be completely dried out.

(3) Remove damage and prepare area according to par. 2.C.

(4) Fabricate, clean, and install honeycomb replacement core plug per par. 2.D.

(5) Clean surface according to par. 2.C.(2)(e).

(6) Prepare and apply repair plies according to par. 2.E.

(7) Bag repair and cure according to par. 2.F. and 2.G.

(8) Refinish the repair according to par. 2.H.

(9) Perform applicable post-repair requirements per par. 2.I. before returning the repaired component to flight service.

D. Repair 4 - Repair of Damage to Both Skins and Honeycomb Core (Fig. 13)

(1) Determine extent of damage according to par. 2.A.

(2) Remove all contamination and water from damaged area per par. 2.B. Area must be completely dried out.

(3) Remove damage and prepare area according to par. 2.C.

(4) Fabricate, clean, and install honeycomb replacement core plug per par. 2.D., except it is not necessary to vacuum bag the core plug installation at this time.

(5) Prepare and apply repair plies to one surface of the panel according to par. 2.E. A caul plate may be used on the opposite face of the panel to restrain the core plug in place.

(6) Bag repair and cure according to par. 2.F. and 2.G. Ensure that temperature is approximately equal on both sides of panel.

(7) Sand core plug approximately flush with surrounding material, making allowance for slight core crush during cure.

(8) Clean surface according to par. 2.C.(2)(e).

(9) Prepare and apply repair plies to the other surface of the panel according to par. 2.E.

(10) Bag repair and cure according to par. 2.F. and 2.G.

(11) Refinish the repair according to par. 2.H.

(12) Perform applicable post-repair requirements per par. 2.I. before returning the repaired component to flight service.

NOTE: The above two-stage cure procedure is recommended. As an option, a three-stage cure procedure may be used wherein the core plug installation and the repair plies on each side may be cured separately.

3.E. Repair 5 - Repair of Damage to Honeycomb Panel Where Access is Limited to One Side (Fig. 14)

NOTE: This repair applies to flat panels (or nearly flat panels) where damage extends completely through a panel, but access is not readily available to repair the unexposed side.

(1) Determine extent of damage according to par. 2.A.

(2) Remove all contamination and water from damaged area per par. 2.B. Area must be completely dried out.

(3) Remove damage and prepare area according to par. 2.C. and the following:

(a) Enlarge the hole in the outer skin and core (D diameter) to permit a repair to be made to the inner skin with the required overlap.

NOTE: For components with 0.50 overlap requirement (refer to par. 2.C.(2)(a)), D diameter = d + N + 1. For components with 1.00 overlap requirements (refer to par. 2.C.(2)(a)). D diameter = d + N + 2.
d = major diameter of the oval hole in the inner skin.
N = number of plies in the inner skin.

Stepping of the plies in the inner skin is not allowed for this repair.

(b) Cut the damaged area in the inner skin to an oval shaped hole.

NOTE: The major diameter of the oval hole must be large enough for the minor diameter of the oval patch to fit through. The minor diameter of the oval hole must be large enough to maneuver the patch and spring steel assembly through.

(4) Fabricate an airtight patch to cover the oval hole in the inner skin from the inaccessible side.

(a) Make a suitable mold on which to lay up the patch. A thin gauge aluminum sheet or any smooth surface can be used as a mold.

(b) Cover the mold with parting film or a release agent.

(c) Cut and layup five plies of BMS 9-3 fabric or BMS 9-8 graphite fabric, using the procedures of par. 2.E., except that all plies are to have the same diameter and be at least equal to the D diameter (ref par. 3.E.(3)(a)). Orientation is optional.

3.E.(4) (d) Bag and cure the patch according to par. 2.F. and 2.G.

(e) Remove the patch from the mold.

(f) Trim the patch to an oval shape that will overlap the oval hole in the inner skin by 0.25 inch minimum.

(g) Drill a 1/8 inch diameter hole in the center of the patch.

(h) Abrade the surface of the patch that will bond to the inner skin using No. 240 or finer Scotch-Brite abrasive.

(i) Remove all sanding dust using oil-free compressed air.

(j) Fabricate a strip of spring steel 1.0 x 10.0 inches and drill a 1/8 inch diameter hole in the center.

(k) Assemble the patch and spring steel using a 1/8 inch diameter cleco fastener.

(5) Remove Tedlar, if required, and abrade the underside of the inner skin to a distance of 0.38 inch from the edge of the oval hole using No. 180 or finer sandpaper. Do not damage the existing ply filaments.

(6) Clean the surface according to par. 2.C.(2)(e).

(7) Bend up both ends of the spring steel and apply BMS 5-25, Type II, Grade 1 adhesive or BMS 5-92, Type I adhesive to the patch.

(8) Hold the spring steel up, insert the patch into the oval hole, and orientate the patch so that the hole is covered. Release the spring steel so that it holds the patch tightly up against the inner skin.

(9) Cure the adhesive per Fig. 2.

(10) Remove the cleco fastener and spring steel. Fill the hole in the patch with BMS 5-25, Type II, Grade 1 adhesive, BMS 5-92, Type I adhesive, or BMS 5-95, Class B-1/2 sealant and allow to cure.

NOTE: Cure BMS 5-25 and BMS 5-92 per Fig. 2. Cure BMS 5-95 per 51-20-04.

(11) Clean the repair area according to par. 2.C.(2)(e).

(12) Prepare and apply the repair plies for the inner skin using the procedures of par. 2.E., except that all plies are to have the same diameter and be at least equal to the D diameter (ref par. 3.E.(3)(a)).

3.E.(13) Fabricate and clean core plug according to par. 2.D.(1) and 2.D.(2).

(14) Apply Resin Mix 2 (Fig. 2) to the surface of the inner skin which fays with the inner skin patch and install patch in place. Then apply Resin Mix 2 on the other (exposed) side of the patch.

(15) Complete the installation of the core plug per par. 2.D.(3).

(16) Clean surfaces according to par. 2.C.(2)(e).

(17) Prepare and apply repair plies to the outer skin surface of the panel according to par. 2.E.

(18) Bag repair and cure according to par. 2.F. and 2.G.

(19) Refinish the panel outer surface according to par. 2.H.

(20) Perform applicable post-repair requirements per par. 2.I. before returning the repaired component to flight service.

F. Repair 6 - Repair of Delamination Between Plies of Panel Edgeband (Fig. 20).

CAUTION: DELAMINATION MUST NOT REACH DEEPER THAN 0.50 INTO PANEL EDGEBAND OR EXTEND TO WITHIN 0.50 OF HONEYCOMB CORE (FIG. 20). IF SO REPAIR PER DAMAGED PLY METHOD.

(1) Determine damage per par. 2.A.

(2) Remove all contaminants and water from damaged area. Area must be completely dried out.

(3) Force Resin Mix 2 (Fig. 2) into delaminated area.

(4) Clamp plies together and remove excess resin.

(5) Cure according to par. 2.G., maintaining pressure until cured. Vacuum pressure is not required for this repair.

(6) Refinish surface as required.

(7) Perform applicable post-repair requirements per par. 2.I. before returning the repaired component to flight service.

3.G. Repair 7 - Repair of Damage to Plies on Edge of Honeycomb Panel (Fig. 15)

(1) Determine extent of damage according to par. 2.A.

(2) Remove all contamination and water from damaged area per par. 2.B. Area must be completely dried out.

CAUTION: DO NOT SAND INTO BOND PLY OR CORE (FIG. 15). LOSS OF STRUCTURAL STRENGTH OF THE COMPONENT WILL OCCUR IF THIS CAUTION IS NOT OBSERVED. BOND PLY IS PLY ADJACENT TO CORE.

(3) Remove damage and prepare area according to par. 2.C.

CAUTION: ON HYBRID PANELS, ENSURE THAT GRAPHITE REPAIR PLIES DO NOT EXTEND INTO AREAS OF FASTENER HOLES. ELECTROLYSIS BETWEEN THE METAL FASTENERS, SUPPORT STRUCTURE AND GRAPHITE MAY CAUSE CORROSION IN THE ALUMINUM STRUCTURE.

(4) Prepare and apply repair plies according to par. 2.E.

(5) Bag repair and cure according to par. 2.F. and 2.G.

(6) Refinish the repair according to par. 2.H.

(7) Perform applicable post-repair requirements per par. 2.I. before returning the repaired component to flight service.

3.H. Repair 8 - Repair of Damage to Honeycomb Core on Edge of Honeycomb Panel (Fig. 16)

(1) Determine extent of damage according to par. 2.A.

(2) Remove all contamination and water from damaged area per par. 2.B. Area must be completely dried out.

(3) Remove damage and prepare area according to par. 2.C.

(4) Fabricate, clean, and install honeycomb replacement core plug per par. 2.D.

(5) Clean surfaces according to par. 2.C.(2)(e).

CAUTION: ON HYBRID PANELS, ENSURE THAT GRAPHITE REPAIR PLIES DO NOT EXTEND INTO AREAS OF FASTENER HOLES. ELECTROLYSIS BETWEEN METAL FASTENERS, SUPPORT STRUCTURE AND GRAPHITE MAY OCCUR CAUSING CORROSION TO ALUMINUM STRUCTURE.

(6) Prepare and apply repair plies according to par. 2.E.

(7) Bag repair and cure according to par. 2.F. and 2.G.

(8) Refinish the repair according to par. 2.H.

(9) Perform applicable post-repair requirements per par. 2.I. before returning the repaired component to flight service.

I. Repair 9 - Repair of Damaged Panel Attach Hole in Honeycomb Panel Edgebands or Along Edges of Solid Laminate Panels (Fig. 17)

(1) Determine the extent of damage according to par. 2.A.

(2) Remove all contamination and water from damaged area per par. 2.B. Area must be completely dried out. Any structure in the repair area that cannot be dried out must be removed along with the other damage.

(3) Taper sand around the hole to remove damage according to Fig. 17.

(4) Clean area according to par. 2.C.(2)(e).

CAUTION: ON HYBRID PANELS, ENSURE THAT GRAPHITE REPAIR PLIES DO NOT EXTEND INTO AREAS OF FASTENER HOLES. ELECTROLYSIS BETWEEN METAL FASTENERS, SUPPORT STRUCTURE AND GRAPHITE MAY OCCUR CAUSING CORROSION TO ALUMINUM STRUCTURE.

(5) Prepare and apply repair plies according to par. 2.E. and Fig. 17.

3.I. (6) Bag repair and cure according to par. 2.F. and 2.G.

(7) Refinish the repair according to par. 2.H.

(8) Drill and countersink fastener holes.

(9) Perform applicable post-repair requirements per par. 2.I. before returning the repaired component to flight service.

J. Repair 10 - Repair of Damage, 0.50-Inch Diameter or less, to Solid Laminates (Fig. 18)

NOTE: This repair applies to components made from laminated graphite, aramid, or graphite/aramid/glass fabric hybrid plies and epoxy resin without a honeycomb core.

(1) Determine extent of damage according to par. 2.A. If delamination is found, repair per par. 3.K. If no delamination is found, continue with this repair.

(2) Cleanup damage per Fig. 18.

(3) Clean repair area per par. 2.C.(2)(e).

(4) Fill hole flush or slightly higher than surrounding surface with Resin Mix 4.

(5) Cure repair according to par. 2.G., except it is not necessary to maintain a vacuum.

CAUTION: DO NOT SAND INTO FIBERS IN THE AREA SURROUNDING THE DAMAGE.

(6) Sand any projecting material to fair with surrounding surface within ±0.010 inch.

NOTE: A 0.010-inch thick aluminum template may be used to protect surrounding surface while sanding.

(7) Abrade surface around repair using No. 240, or finer, Scotch-Brite abrasive.

(8) Clean repair area per par. 2.C.(2)(e).

(9) Prepare and apply repair plies, as shown in Fig. 18, according to par. 2.E.

3.J.(10) Bag repair and cure according to par. 2.F. and 2.G.

(11) Refinish the repair according to par. 2.H.

(12) Perform applicable post-repair requirements per par. 2.I. before returning the repaired component to flight service.

K. Repair 11 - Repair of Damage, Greater than 0.50-Inch Diameter, to Solid Laminates (Fig. 19)

NOTE: This repair applies to components made from laminated graphite, aramid, or graphite/aramid/glass fabric hybrid plies and epoxy resin without a honeycomb core.

(1) Determine extent of damage according to par. 2.A.

(2) Remove all contamination and water from damaged area per par. 2.B. Area must be completely dried out.

(3) Remove damage and prepare area according to par. 2.C.

(4) Clean surface according to par. 2.C.(2)(e).

(5) Prepare and apply repair plies according to par. 2.E.

(6) Bag repair and cure according to par. 2.F. and 2.G.

(7) Refinish the repair according to par. 2.H.

(8) Perform applicable post-repair requirements per par. 2.I. before returning the repaired component to flight service.

L. Repair 12 - Repair of Dents

(1) Determine extent of damage according to par. 2.A. If fiber damage or delamination is found, refer to specific component structural repair subject.

(2) If no fiber damage or delamination is found, repair this type of damage per Repair 12 of 51-40-12.

REPAIR NO.	REPAIR TITLE	PARAGRAPH	FIGURE NO.
1	REPAIR OF DAMAGE TO ONE SKIN OF HONEYCOMB PANEL	3.A.	11
2	REPAIR OF DAMAGE, 0.50-INCH DIAMETER OR LESS, TO ONE SKIN AND HONEYCOMB CORE	3.B.	--
3	REPAIR OF DAMAGE, GREATER THAN 0.50-INCH DIAMETER, TO ONE SKIN AND HONEYCOMB CORE	3.C.	12
4	REPAIR OF DAMAGE TO BOTH SKINS AND HONEYCOMB CORE	3.D.	13
5	REPAIR OF DAMAGE TO HONEYCOMB PANEL WHERE ACCESS IS LIMITED TO ONE SIDE	3.E.	14
6	REPAIR OF DELAMINATION BETWEEN PLIES OF PANEL EDGEBAND	3.F.	20
7	REPAIR OF DAMAGE TO PLIES ON EDGE OF HONEYCOMB PANEL	3.G.	15
8	REPAIR OF DAMAGE TO HONEYCOMB CORE ON EDGE OF HONEYCOMB PANEL	3.H.	16
9	REPAIR OF DAMAGED PANEL ATTACH HOLE IN HONEYCOMB PANEL EDGEBANDS OR ALONG EDGES OF SOLID LAMINATE PANELS	3.I.	17
10	REPAIR OF DAMAGE, 0.50-INCH DIAMETER OR LESS, TO SOLID LAMINATES	3.J.	18
11	REPAIR OF DAMAGE, GREATER THAN 0.50-INCH DIAMETER, TO SOLID LAMINATES	3.K.	19
12	REPAIR OF DENTS	3.L.	--

Repair Index
Figure 1

136490

RESIN TYPE	COMPONENTS	PARTS BY WEIGHT	OPEN TIME BEFORE USE, OR POT LIFE OF MIXTURE	CURING TIME [A][B]
RESIN MIX 1 (POTTING RESIN) (BMS 5-28 TYPE 7)	EPOCAST 89537A RESIN EPOCAST 89537B HARDENER MICROBALLOONS	100 ±1 22 ±1 6	60 MINUTES AT 70°F (21°C)	SEE TEXT AND FIG. 8
	CG-1305 RESIN CG-1305 HARDENER MICROBALLOONS	100 ±5 22 ±1 6		
	FR 7162A RESIN FR 7162B HARDENER MICROBALLOONS	100 ±5 40 ±2 7		
RESIN MIX 2 (LAMINATING RESIN) (BMS 8-301 CLASS I)	HYSOL EA9390 BASE HYSOL EA9390 HARDENER	100 ±0.5 56 ±0.5	2 HOURS AT 75°F (25°C)	SEE TEXT AND FIG. 8
RESIN MIX 3 (LAMINATING RESIN)	RESIN MIX 2 CAB-O-SIL (FUMED SILICA)	100 4 ±0.5	SAME AS RESIN MIX 2	SAME AS RESIN MIX 2
RESIN MIX 4	RESIN MIX 2 MILLED GLASS FIBER	80 20	SAME AS RESIN MIX 2	SAME AS RESIN MIX 2
RESIN MIX 5 (SEALER RESIN) (BMS 8-207, TYPE 1, CLASS I)	EC1838A RESIN EC1838B HARDENER	50 50	20 MINUTES AT 75° TO 79°F (24° TO 26°C)	2 HRS AT 105° (41°C) TO 125°F (52°C)
RESIN MIX 5 (SEALER RESIN) ALTERNATE (BMS 8-207 TYPE 1, CLASS II)	FR-40 RESIN FR-5413C HARDENER	100 ±1 15 ±0.5	20 MINUTES AT 75° TO 79°F (24° TO 26°C)	12 HRS MIN AT ROOM TEMP (65°F MIN) (19°C MIN) 1 HR MIN AT 150°F (66°C) TO 170°F (77°C)
RESIN MIX 5 (SEALER RESIN) ALTERNATE	EPIBOND 156A RESIN EPIBOND 941 HARDENER	100 ±2 10 ±0.5	45 TO 60 MINUTES AT 70°F (21°C)	SEE FIG. 10
RESIN MIX 5 (SEALER RESIN) ALTERNATE	EPIBOND 156A RESIN EPIBOND 156B HARDENER	100 ±2 6 ±0.3	15 TO 25 MINUTES AT 77°F (25°C)	12 HRS AT 70°F (21°C) OR 1 TO 3 HRS AT 150°F (66°C)
RESIN MIX 5 (SEALER RESIN) ALTERNATE	FR-5318S RESIN FR-5318C HARDENER	100 ±2 50 ±1	45 TO 60 MINUTES AT 70°F (21°C)	SEE FIG. 10
RESIN MIX 5 EPOX-O WELD (SEALER RESIN) ALTERNATE	TWO COMPONENT KIT	FOLLOW MANUFACTURERS INSTRUCTIONS FURNISHED WITH EACH KIT		
			45 TO 60 MINUTES AT 70°F (21°C)	SEE FIG. 10

Resin Specifications and Mixing Procedures
Figure 2 (Sheet 1)

RESIN TYPE	COMPONENTS	PARTS BY WEIGHT	OPEN TIME BEFORE USE, OR POT LIFE OF MIXTURE	CURING TIME [A] [B]
BMS 5-25 TYPE II, GRADE 1 ADHESIVE	EPIBOND 1539A EPIBOND 1539B	113 ±5.6 100 ±5.0	60 MINUTES AT 70°F (21°) TO 80°F (27°C)	12 HRS MIN AT 65°F (19°C) TO 100°F (38°C). 2 HRS MIN AT 115°F (46°C) TO 135°F (57°C)
BMS 5-92 TYPE I ADHESIVE	EC2216A GRAY EC2216B WHITE	140 100	2 HRS BELOW 100°F (38°C)	24 HRS MIN AT 65°F (19°C) TO 100°F (38°C). 180 ±10 MINUTES AT 110°F (43°C) TO 130°F (54°C)

WARNING: THESE CHEMICALS CONTAIN TOXIC INGREDIENTS. PROVIDE ADEQUATE VENTILATION AND PROTECT THE SKIN AND EYES FROM CONTACT WITH UNCURED RESINS OR CURING AGENT. WEAR NEOPRENE GLOVES OVER COTTON GLOVES FOR PROTECTION OF HANDS. IF SKIN IS EXPOSED TO DIRECT CONTACT WITH UNCURED RESINS OR CURING AGENT, WASH WITH WARM WATER OR SOAP. AVOID THE USE OF SOLVENTS FOR CLEANING THE SKIN.

CAUTION: TO PREVENT CONTAMINATION OF THE RESIN, DO NOT USE WAXED CONTAINERS FOR MIXING.

	MIXING PROCEDURE
RESIN MIX 1	1. ADD PHENOLIC MICROBALLOONS TO RESIN AND MIX THOROUGHLY. 2. ADD HARDENER AND MIX THOROUGHLY.
RESIN MIX 2 RESIN MIX 5	ADD HARDENER TO RESIN AND MIX THOROUGHLY.
RESIN MIX 3	ADD CAB-O-SIL TO RESIN MIX 2 AND MIX THOROUGHLY.
RESIN MIX 4	ADD MILLED GLASS FIBERS TO RESIN MIX TO PROVIDE A CONSISTENCY SIMILAR TO A THIN PUTTY.

NOTES

- REFER TO 51-20-00 FOR SOURCES OF MATERIALS

[A] CURE TIME IS THE MINIMUM TIME REQUIRED TO CURE PRIOR TO HANDLING OR SANDING

[B] IF HEAT LAMP IS USED AS A HEAT SOURCE, SEE FIG. 9 FOR HEAT LAMP TEMPERATURE CURVE

Resin Specifications and Mixing Procedures
Figure 2 (Sheet 2)

136041

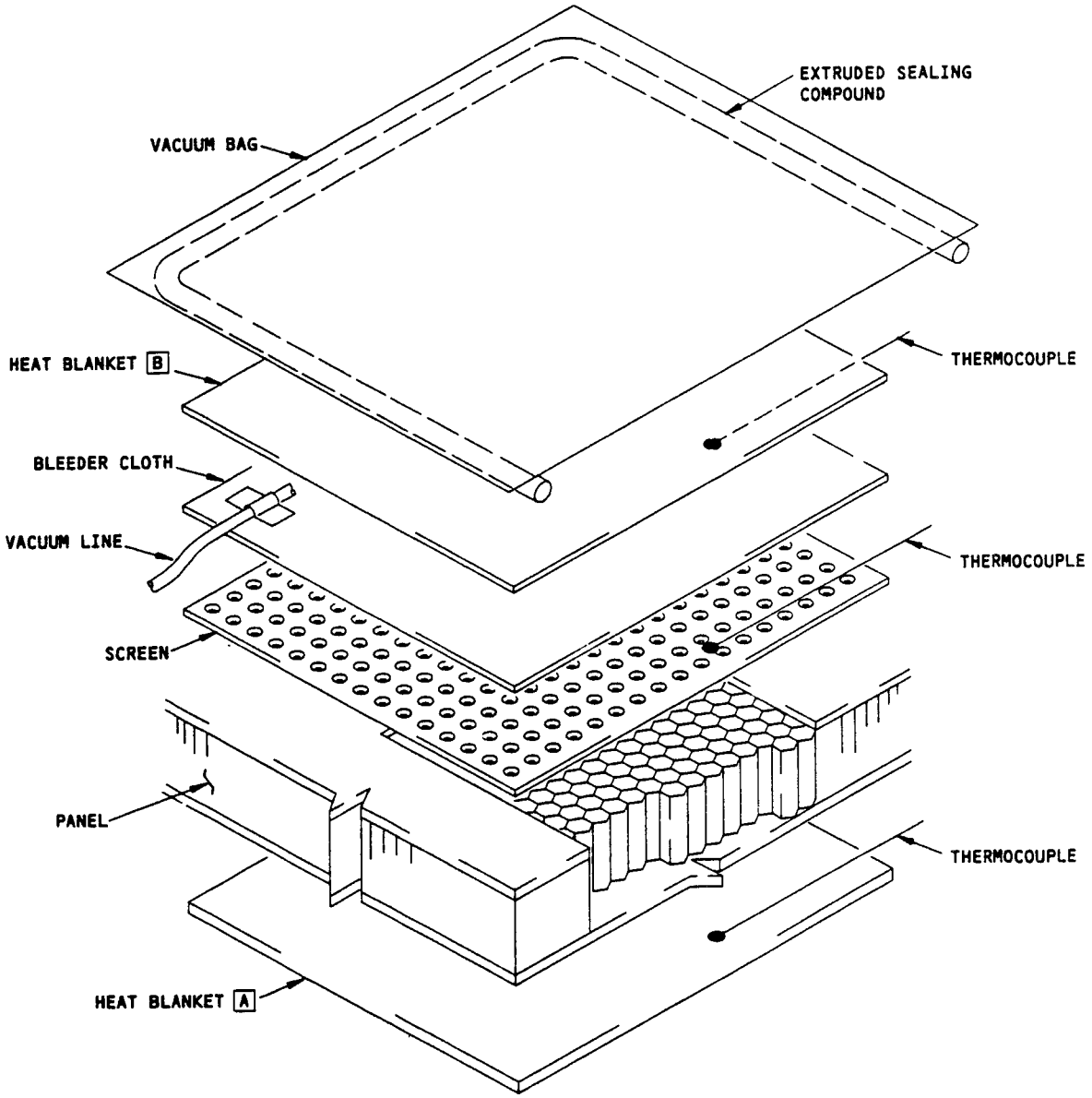

NOTES

A PREFERRED LOCATION OF HEAT BLANKET WHEN OPPOSITE FACE IS ACCESSIBLE

B ALTERNATE LOCATION OF HEAT BLANKET WHEN OPPOSITE SIDE IS INACCESSIBLE. THIS LOCATION MAY BE USED FOR AN ADDITIONAL HEAT BLANKET TO ACCELERATE WATER REMOVAL

Water Removal From Honeycomb Sandwich
Figure 3

136787

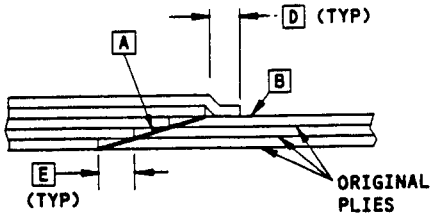

TAPER SANDED SKIN
DETAIL I

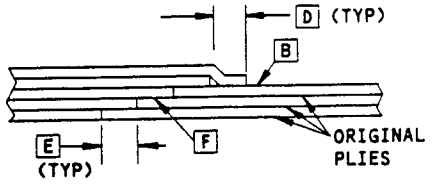

STEP SANDED SKIN
DETAIL II

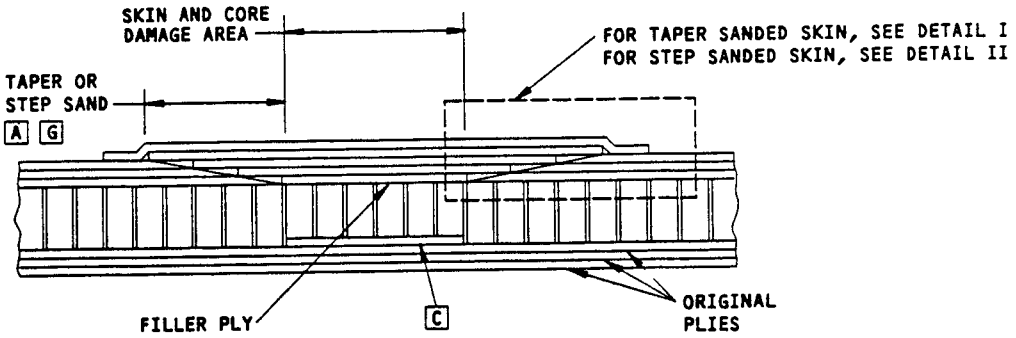

SECTION THRU TYPICAL REPAIR

NOTES

A TAPER SAND OR STEP SAND EXISTING PLIES AROUND REPAIR AREA A MINIMUM OF 0.50 OR 1.00 INCH FOR EACH EXISTING PLY H

B DO NOT EXPOSE OR DAMAGE FILAMENTS IN UNTAPERED OR UNSTEPPED AREA WHEN SANDING

C SANDING MUST NOT EXPOSE OR DAMAGE THE FILAMENTS IN BOND PLY (PLY BONDED TO ORIGINAL CORE)

D FIRST EXTRA REPAIR PLY MUST OVERLAP AT LEAST 0.50 OR 1.00 INCH PAST EDGE OF LAST REPAIR PLY. EACH SUCCEEDING EXTRA REPAIR PLY MUST OVERLAP AT LEAST 0.50 OR 1.00 INCH PAST EDGE OF PRECEDING EXTRA REPAIR PLY H

E EACH REPAIR PLY MUST OVERLAP AT LEAST 0.50 OR 1.00 INCH PAST EDGE OF PRECEDING REPAIR PLY H

F REMOVE DAMAGED PLIES IN STEPS. DO NOT EXPOSE OR DAMAGE FILAMENTS IN STEPPED AREA WHEN STEP SANDING

G TAPER SAND SURFACES IN AREAS OF CRITICAL AERODYNAMIC SMOOTHNESS. REFER TO 51-70

H SOME 350°F (177°C) ORIGINAL CURE TEMPERATURE COMPONENTS IN HEAT-AFFECTED ZONES REQUIRE 1.00 MINIMUM OVERLAP FOR EACH REPAIR PLY AND ARE IDENTIFIED IN THE COMPONENT REPAIR CHARTS. ALL OTHER COMPONENTS REQUIRE 0.50 MINIMUM OVERLAP

Sanding and Overlap Requirements
Figure 4

136509

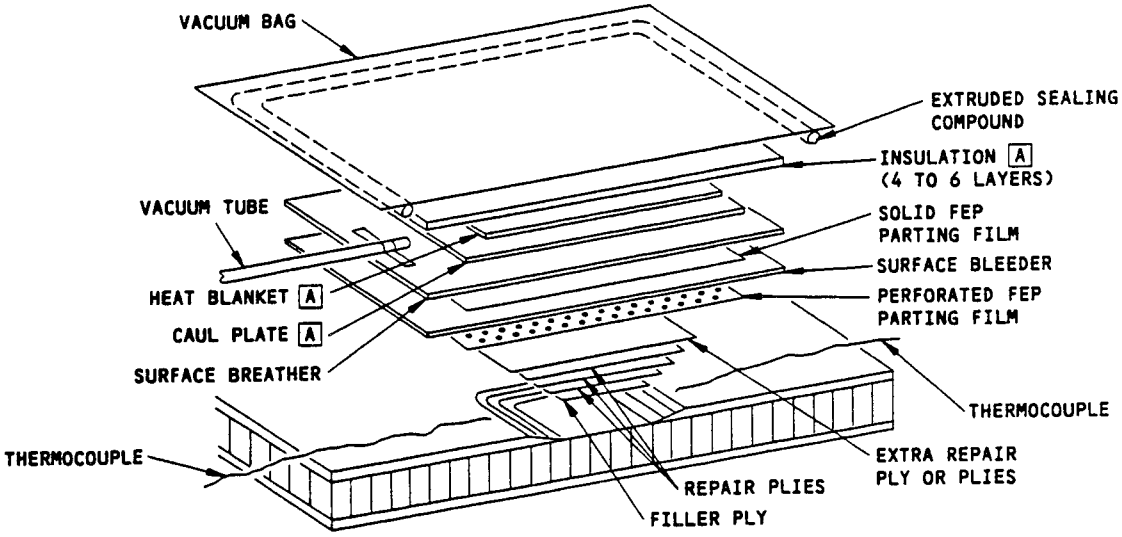

HONEYCOMB PANEL SHOWN
SOLID LAMINATE SIMILAR

BAGGING SEQUENCE FOR SKIN PLY REPAIR

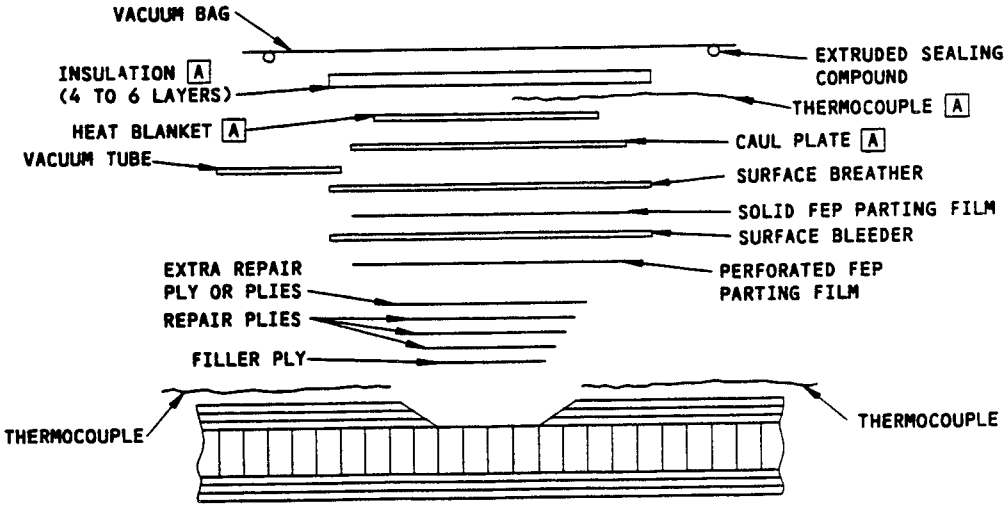

SECTION THRU SKIN PLY REPAIR

NOTES

[A] USE ONLY IF HEAT BLANKET IS USED AS A HEAT SOURCE

Application of Pressure During Cure
Figure 5 (Sheet 1)

136788

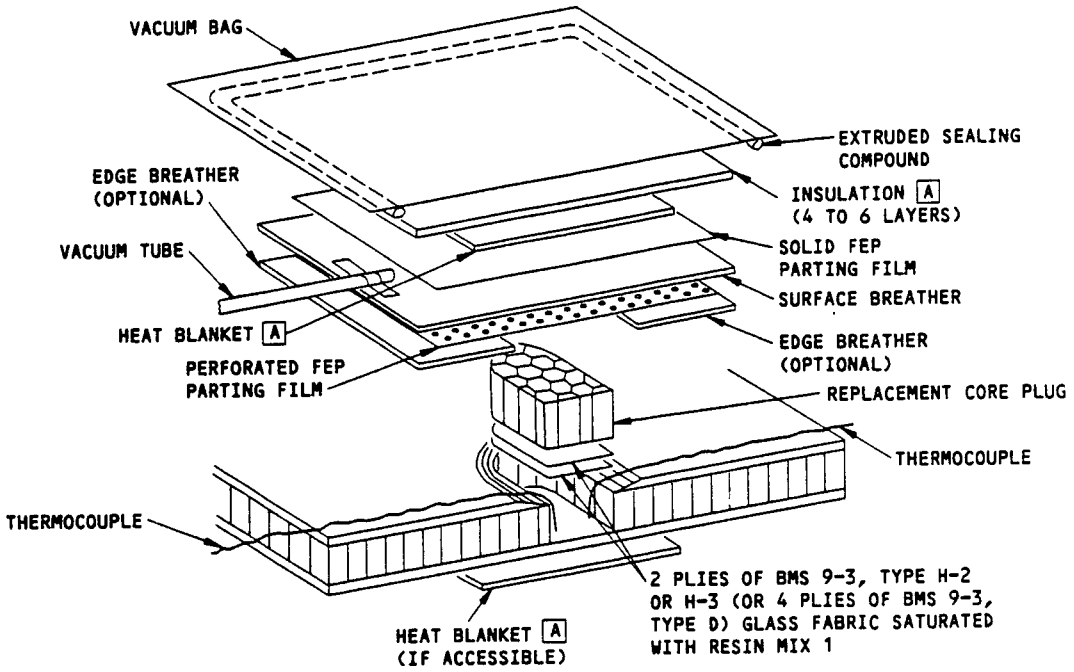

BAGGING SEQUENCE FOR CORE REPLACEMENT

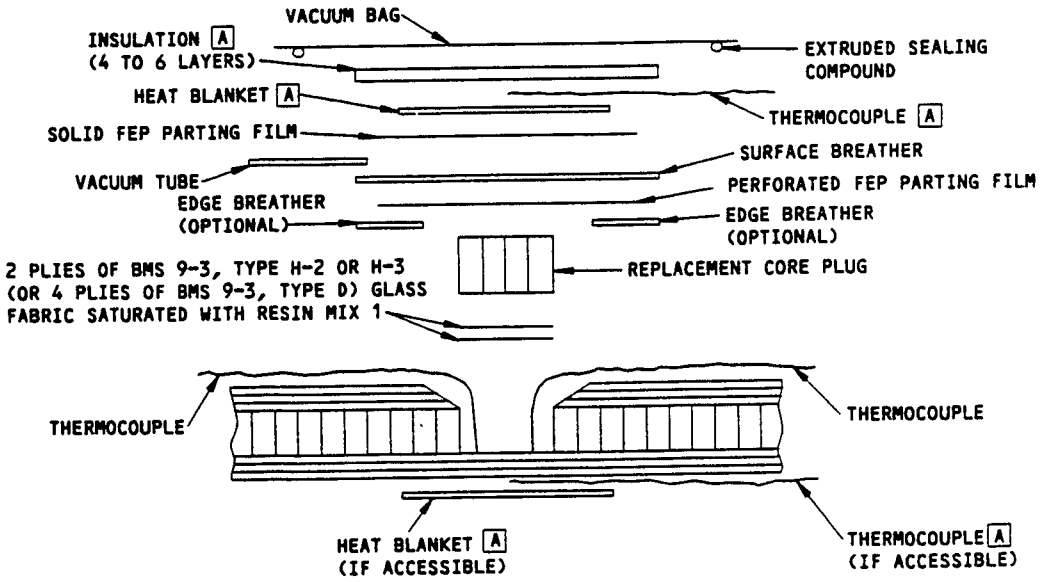

SECTION THRU CORE REPLACEMENT REPAIR

Application of Pressure During Cure
Figure 5 (Sheet 2)

136516

ORIGINAL PLY MATERIAL		REPAIR PLY MATERIAL	REPAIR PLY SUBSTITUTE MATERIAL
GLASS FABRIC	BMS 8-79, TYPE 120	BMS 9-3, TYPE D [A]	BMS 9-3, TYPE H-2 OR H-3 [A] [B]
	BMS 8-139, TYPE 120		
	BMS 8-79, TYPE 1581	BMS 9-3, TYPE H-2 [A]	BMS 9-3, TYPE D OR H-3 [A] [C] [D]
	BMS 8-139, TYPE 181		
ARAMID FABRIC	BMS 8-218, STYLE 120	BMS 9-3, TYPE D [A] (GLASS FABRIC)	BMS 9-3, TYPE H-2 OR H-3 [A] [B]
	BMS 8-219, STYLE 120		
	BMS 8-218, STYLE 285	BMS 9-3, TYPE H-2 OR H-3 [A] (GLASS FABRIC)	BMS 9-3, TYPE D [A] [C]
	BMS 8-219, STYLE 285		
GRAPHITE TAPE	BMS 8-168, TYPE II, CLASS 1, ALL GRADES	BMS 9-8, TYPE I, CLASS 2, STYLE 3K-70-P [E] (GRAPHITE FABRIC)	NONE
	BMS 8-212, TYPE II, CLASS 1 OR 3, ALL GRADES		
GRAPHITE FABRIC	BMS 8-168, TYPE II, CLASS 2, STYLE 3K-70-PW	BMS 9-8, TYPE I, CLASS 2, STYLE 3K-70-P	NONE
	BMS 8-212, TYPE IV, CLASS 2, STYLE 3K-70-PW		
	BMS 8-256, TYPE I, CLASS 2, STYLE 3K-70-PW		
	BMS 8-256, TYPE IV, CLASS 2, STYLE 3K-70-PW		
	BMS 8-258, CLASS 2, STYLE 3K-70-PW		
	BMS 8-212, TYPE III, CLASS 2, STYLE 3K-135-8H	BMS 9-8, TYPE I, CLASS 2, STYLE 3K-135-8H	NONE
ALUMINUM FOIL/GLASS FABRIC	BMS 8-289, TYPE 120, ALL CLASSES AND GRADES	BMS 9-3, TYPE D [A]	NONE
ALUMINUM COATED GLASS FABRIC	BMS 8-278, TYPE I, ALL CLASSES	BMS 9-3, TYPE H-2 OR H-3 [A]	NONE
	BMS 8-278, TYPE II, ALL CLASSES	BMS 9-3, TYPE D [A]	NONE

REPAIR PLY MATERIALS AND SUBSTITUTE MATERIALS
TABLE I

NOTES

[A] BMS 9-3, CLASSES 2, 5 THRU 13, OR 16 THRU 19 CAN BE USED. CLASS 7 IS RECOMMENDED BECAUSE IT IS KNOWN TO HAVE GOOD STORAGE LIFE.

[B] USE ONE PLY OF TYPE H-2 OR H-3 IN PLACE OF TWO PLIES OF TYPE D

[C] USE THREE PLIES OF TYPE D IN PLACE OF ONE PLY OF TYPE H-2 OR H-3

[D] USE ONE PLY OF TYPE H-3 IN PLACE OF ONE PLY OF TYPE H-2

[E] FOR NUMBER OF GRAPHITE FABRIC PLIES REQUIRED, SEE TABLE II

Repair Ply Materials
Figure 6 (Sheet 1)

NUMBER OF PLIES					
	ORIGINAL PLIES (GRAPHITE TAPE)			REPAIR PLIES (GRAPHITE FABRIC)	
TAPE GRADE	ORIGINAL PLY ORIENTATION			REPAIR PLY ORIENTATION	
	0° OR 90°	+45°	-45°	0° OR 90°	±45°
95	1	---	---	1	---
	---	1	---	---	1
	---	---	1	---	1
	---	1	1	---	1
145	1	---	---	1	1
	---	1	---	---	1
	---	---	1	---	1
190	1	---	---	2	---
	---	1	---	---	1
	---	---	1	---	1

SUBSTITUTION OF GRAPHITE FABRIC FOR GRAPHITE TAPE
TABLE II

Repair Ply Materials
Figure 6 (Sheet 2)

136518

COMPONENT MATERIAL	EXTRA PLY MATERIAL
GRAPHITE/ARAMID/GLASS HYBRID	BMS 9-8, TYPE I, CLASS 2, STYLE 3K-70-P [A]
GRAPHITE	BMS 9-8, TYPE I, CLASS 2, STYLE 3K-70-P
ARAMID	BMS 9-3, TYPE D, H-2, OR H-3

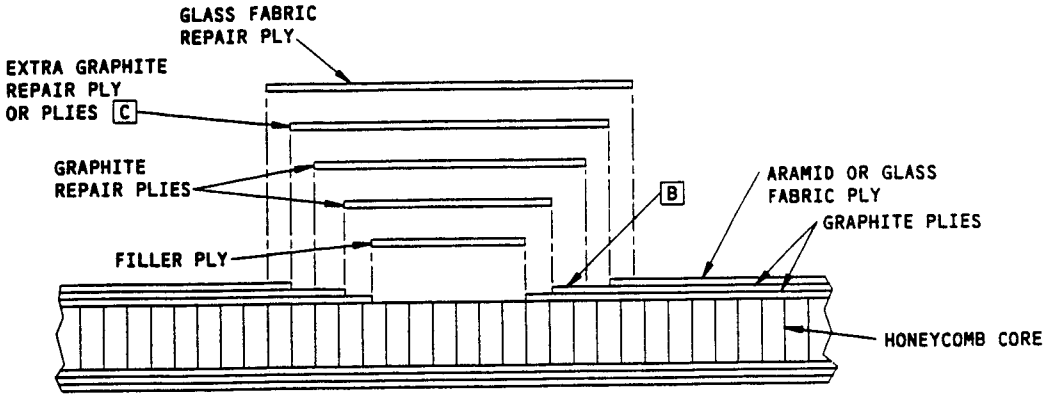

HONEYCOMB PANEL SHOWN
SOLID LAMINATE SIMILAR
DETAIL I

NOTES

[A] ON ALL HYBRID PANELS, AVOID BONDING GLASS FABRIC PLIES BETWEEN GRAPHITE PLIES. SEE DETAIL I

[B] THE EXISTING OUTER PLY OF ARAMID OR GLASS FABRIC MUST BE STEP OR TAPER SANDED TO ALLOW AN ADDITIONAL OVERLAP OF 0.50 OR 1.00 INCH FOR EACH EXTRA GRAPHITE REPAIR PLY [D]

[C] LOCATE THE EXTRA GRAPHITE REPAIR PLY AT THIS LOCATION TO AVOID BONDING GLASS FABRIC PLIES BETWEEN GRAPHITE PLIES

[D] SOME 350°F (177°C) ORIGINAL CURE TEMPERATURE COMPONENTS IN HEAT-AFFECTED ZONES REQUIRE 1.00 MINIMUM OVERLAP FOR EACH REPAIR PLY AND ARE IDENTIFIED IN THE COMPONENT REPAIR CHARTS. ALL OTHER COMPONENTS REQUIRE 0.50 MINIMUM OVERLAP

Extra Repair Ply Materials
Figure 7

136790

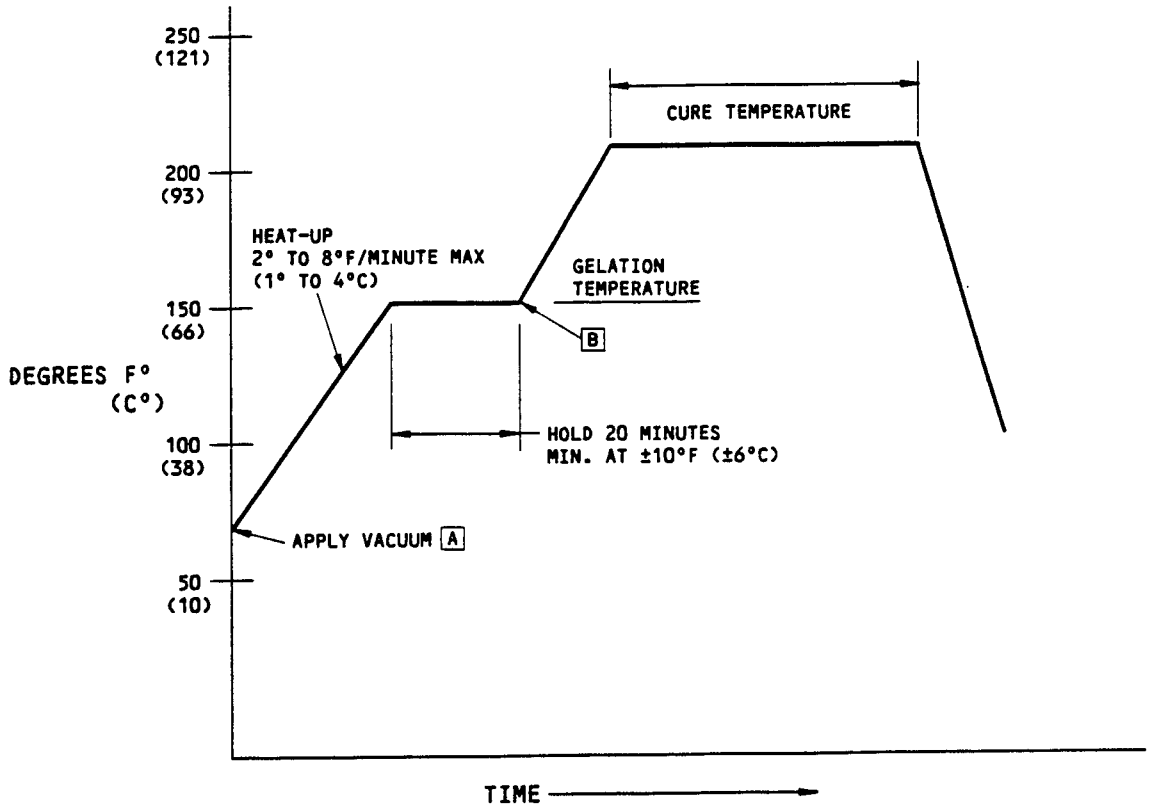

CURE CYCLE FOR HONEYCOMB CORE
DETAIL I

NOTES

A MAINTAIN 22 INCHES VACUUM MINIMUM DURING ENTIRE CURE CYCLE

B HEAT MAY BE TURNED OFF AT THIS POINT; CORE SANDED AND SKIN REPAIR PLIES APPLIED AND COCURED TO THE REQUIRED CURE TEMPERATURE. SEE DETAIL II FOR CURE CYCLE FOR REPAIR PLIES

Potting and Laminating Resin Cure Cycle
Figure 8 (Sheet 1)

136521

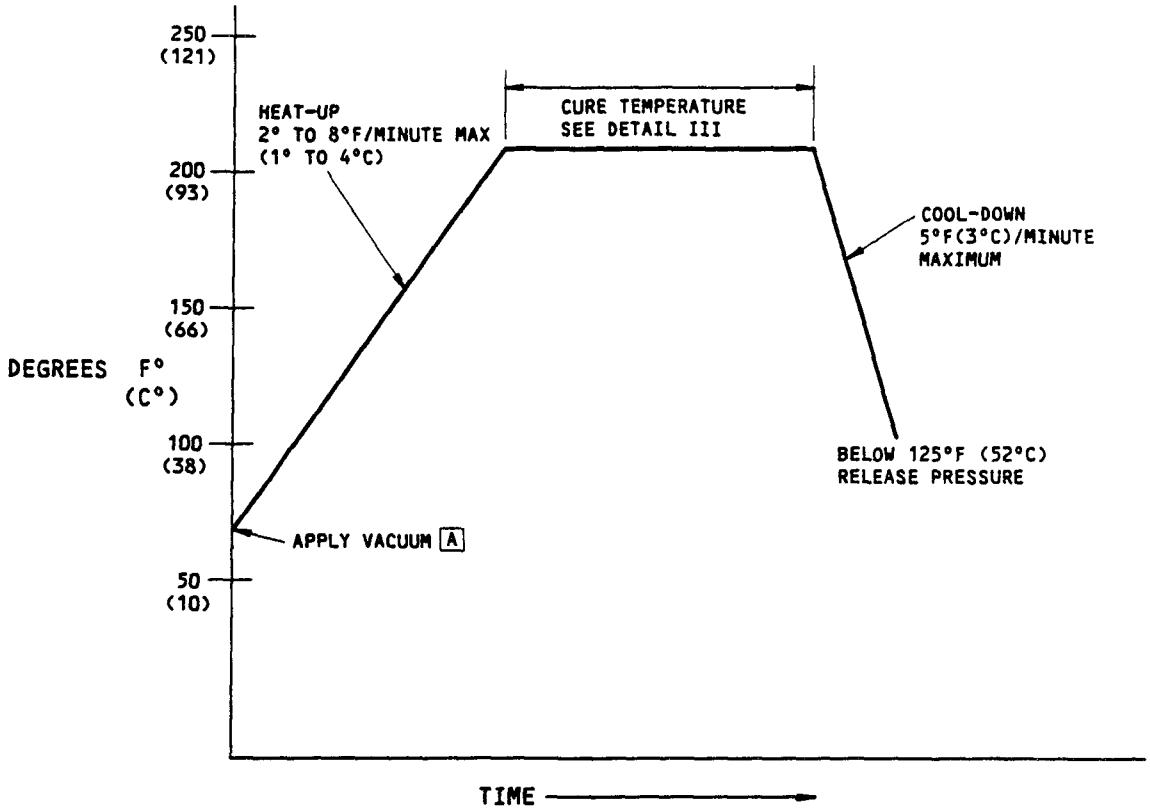

CURE CYCLE FOR REPAIR PLIES
DETAIL II

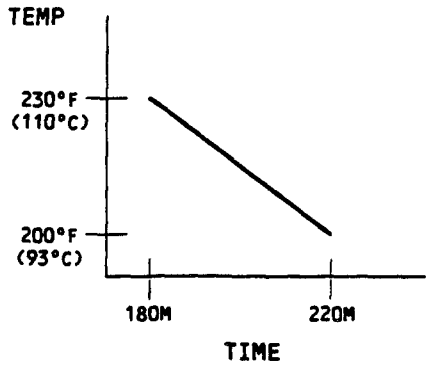

DETAIL III

Potting and Laminating Resin Cure Cycle
Figure 8 (Sheet 2)

136791

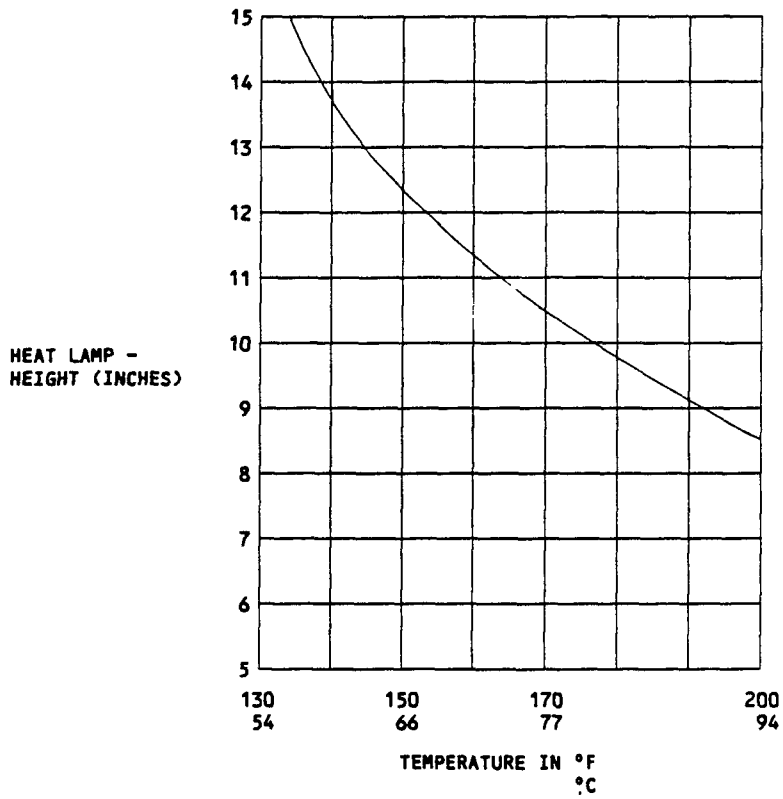

NOTE: THE HEIGHT IN INCHES OF 250-WATT HEAT LAMP FROM SURFACE OF THE PATCH VS TEMPERATURE AT SURFACE OF PART

Heat Lamp Temperature Curve
Figure 9

136524

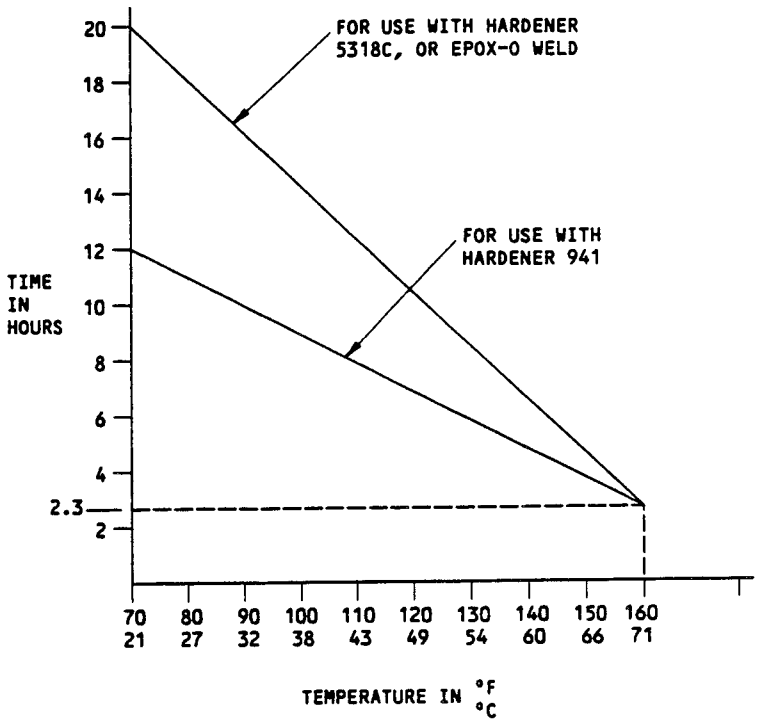

NOTES

- USE THERMOCOUPLES TO MONITOR TEMPERATURE

Sealer Resin Cure Temperature
Figure 10

136792

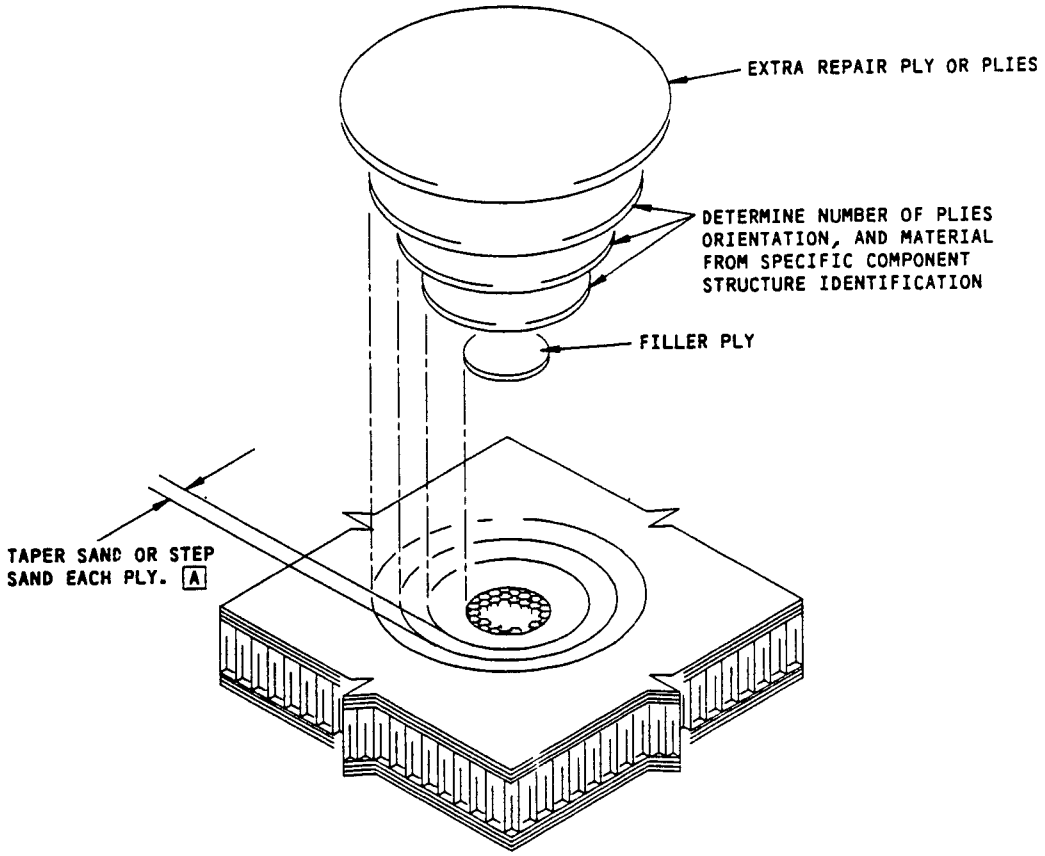

NOTES

A FOR EXTERNAL SKINS, TAPER SANDING IS RECOMMENDED. TAPER SAND SURFACES IN AREAS OF CRITICAL AERODYNAMIC SMOOTHNESS. REFER TO 51-70

Repair 1 - Repair of Damage to One Skin of Honeycomb Panel
Figure 11

136525

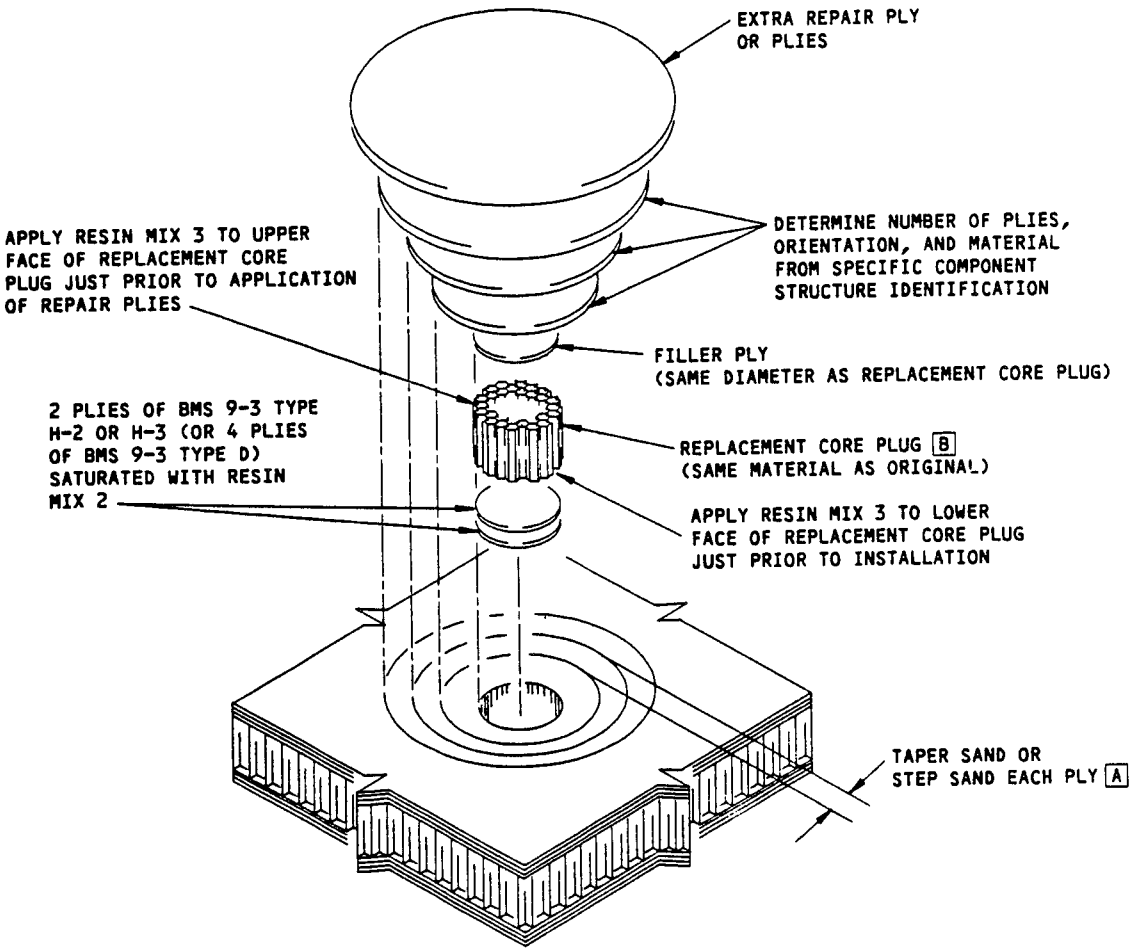

NOTES

A FOR EXTERNAL SKINS, TAPER SANDING IS RECOMMENDED. TAPER SAND SURFACES IN AREAS OF CRITICAL AERODYNAMIC SMOOTHNESS. REFER TO 51-70

B APPLY RESIN MIX 1 AROUND REPLACEMENT CORE PLUG OR ORIGINAL CORE

Repair 3 - Repair of Damage, Greater Than 0.50-inch Diameter, to One Skin and Honeycomb Core
Figure 12

136794

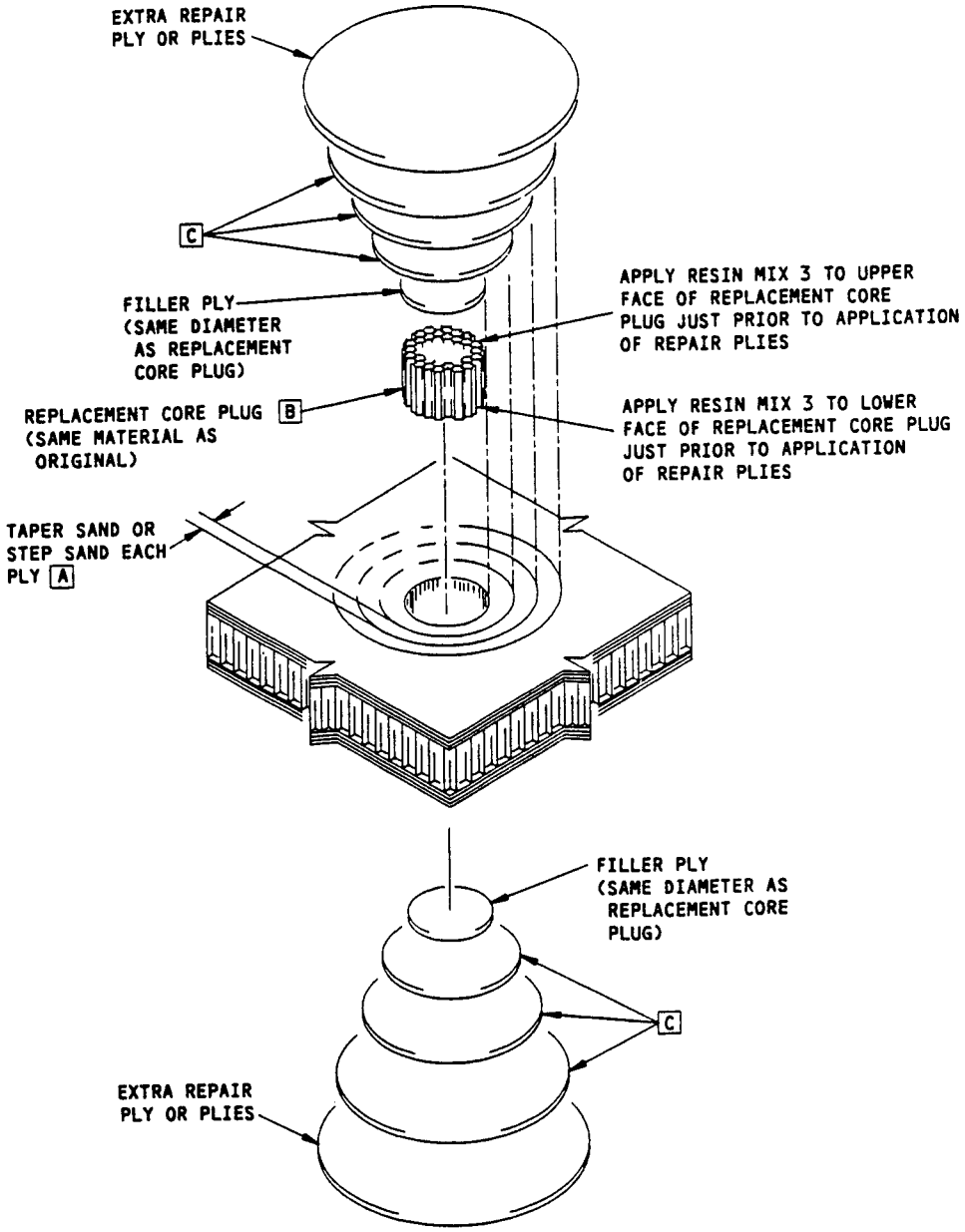

NOTES

A FOR EXTERNAL SKINS, TAPER SANDING IS RECOMMENDED. TAPER SAND SURFACES IN AREAS OF CRITICAL AERODYNAMIC SMOOTHNESS. REFER TO 51-70

B APPLY RESIN MIX 1 AROUND REPLACEMENT CORE PLUG OR ORIGINAL CORE

C DETERMINE NUMBER OF PLIES, ORIENTATION, AND MATERIAL FROM SPECIFIC COMPONENT STRUCTURE IDENTIFICATION

Repair 4 - Repair of Damage to Both Skins and Honeycomb Core
Figure 13

136529

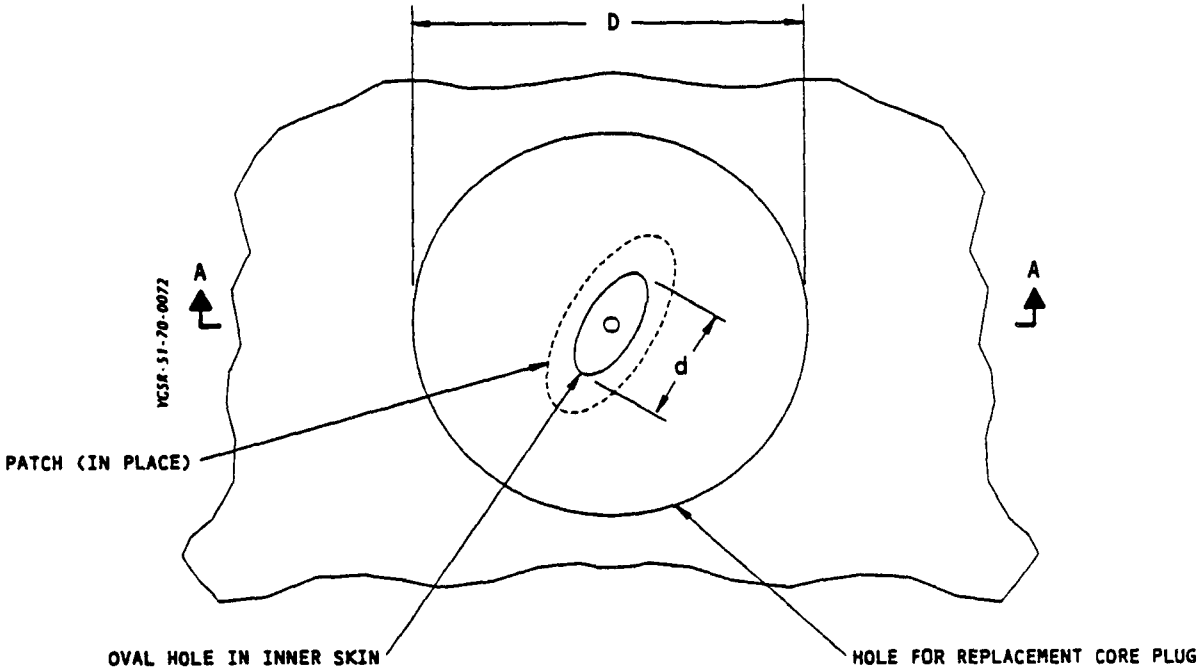

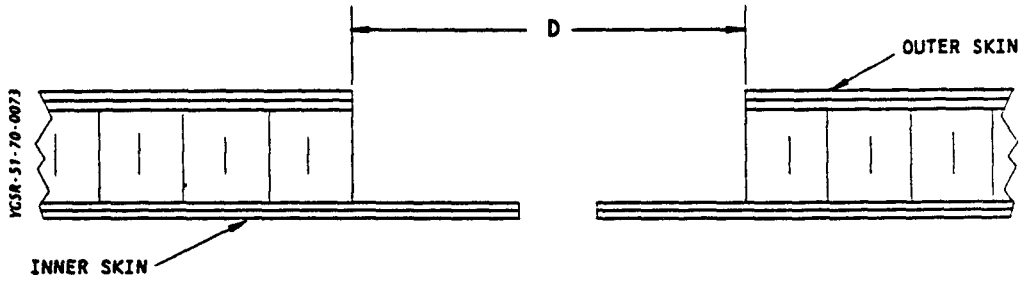

SECTION A-A
(PATCH NOT SHOWN)

DETAIL I

Repair 5 - Repair of Damage to Honeycomb Panel Where Access is Limited to One Side
Figure 14 (Sheet 1)

333232

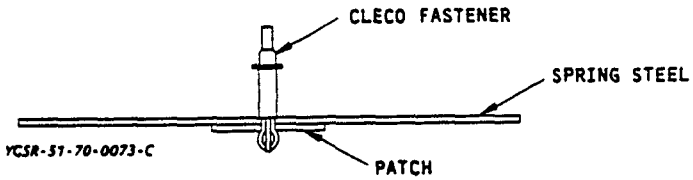

ASSEMBLE PATCH AND SPRING STEEL
DETAIL II

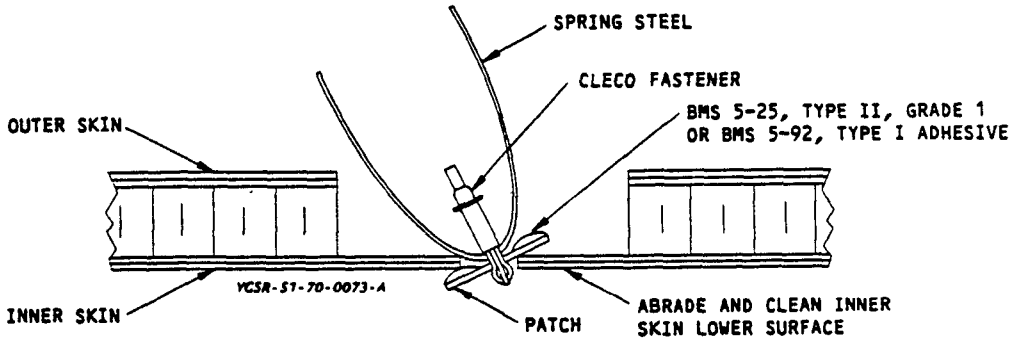

INSERT PATCH INTO OVAL HOLE
DETAIL III

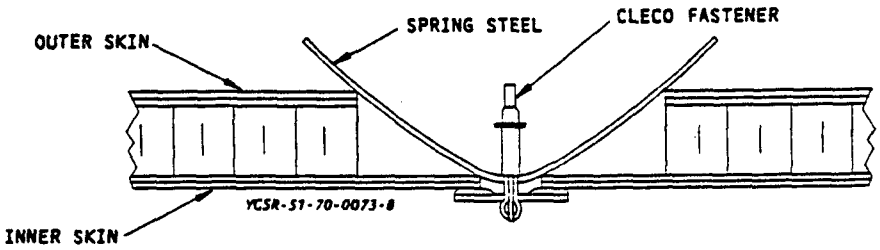

HOLD PATCH IN PLACE WHILE CURING
DETAIL IV

Repair 5 - Repair of Damage to Honeycomb Panel Where
Access is Limited to One Side
Figure 14 (Sheet 2)

333233

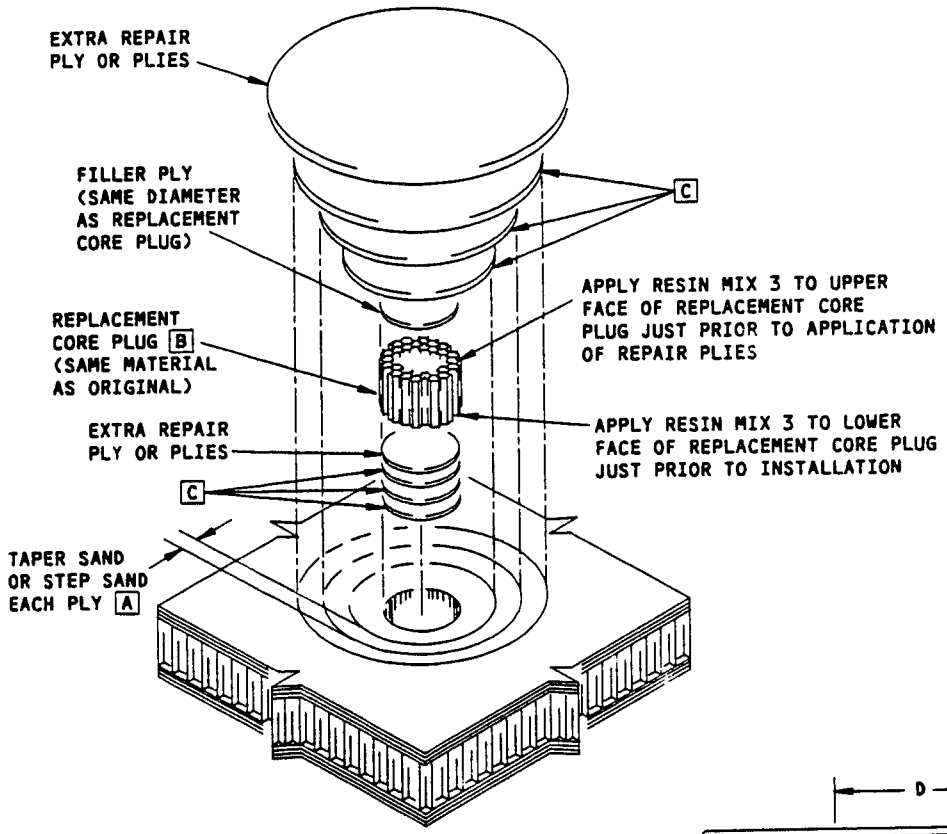

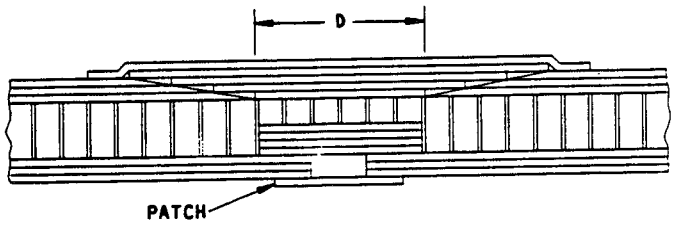

SECTION THRU REPAIR

NOTES

- FOR COMPONENTS WITH 0.050 REPAIR PLY OVERLAP REQUIREMENT (SEE PAR. 2.C.(2)(a)), D = d + N + 1. FOR COMPONENTS WITH 1.00 REPAIR PLY OVERLAP REQUIREMENT, D = d + N + 2. WHERE
  N = NUMBER OF PLIES IN THE INNER SKIN
  d = MAJOR DIAMETER OF OVAL HOLE IN THE INNER SKIN (1.00 INCH MAX)

A FOR EXTERNAL SKINS TAPER SANDING IS RECOMMENDED. TAPER SAND SURFACES IN AREAS OF CRITICAL AERODYNAMIC SMOOTHNESS. REFER TO 51-70

B APPLY RESIN MIX 1 AROUND REPLACEMENT CORE PLUG OR ORIGINAL CORE

C DETERMINE NUMBER OF PLIES, ORIENTATION, AND MATERIAL FROM SPECIFIC COMPONENT STRUCTURE IDENTIFICATION. SEE FIG. 6 FOR REPAIR PLY MATERIALS

Repair 5 - Repair of Damage to Honeycomb Panel Where Access is Limited to One Side
Figure 14 (Sheet 3)

136800

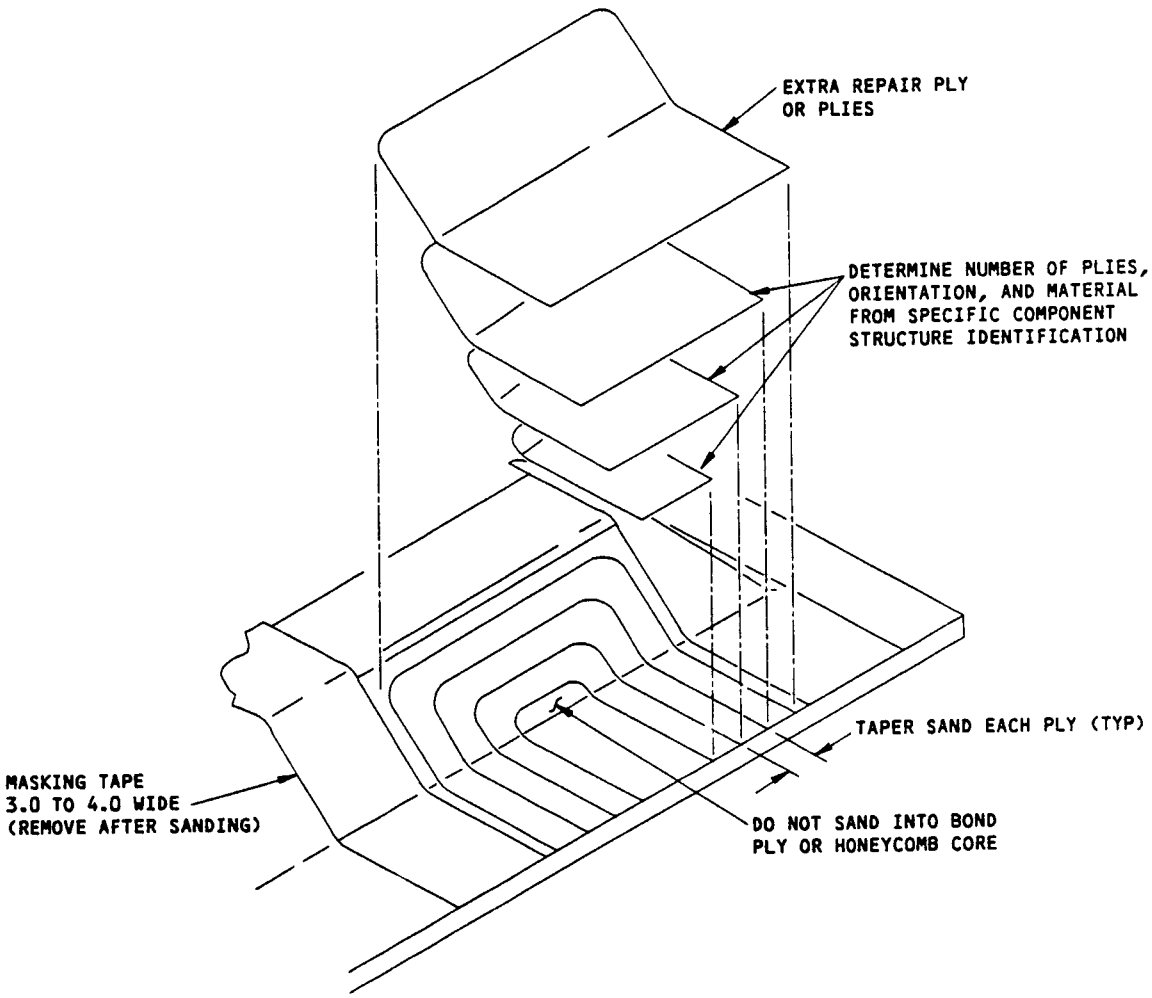

Repair 7 - Repair Of Damage to Plies On Edge of Honeycomb Panel
Figure 15

136782

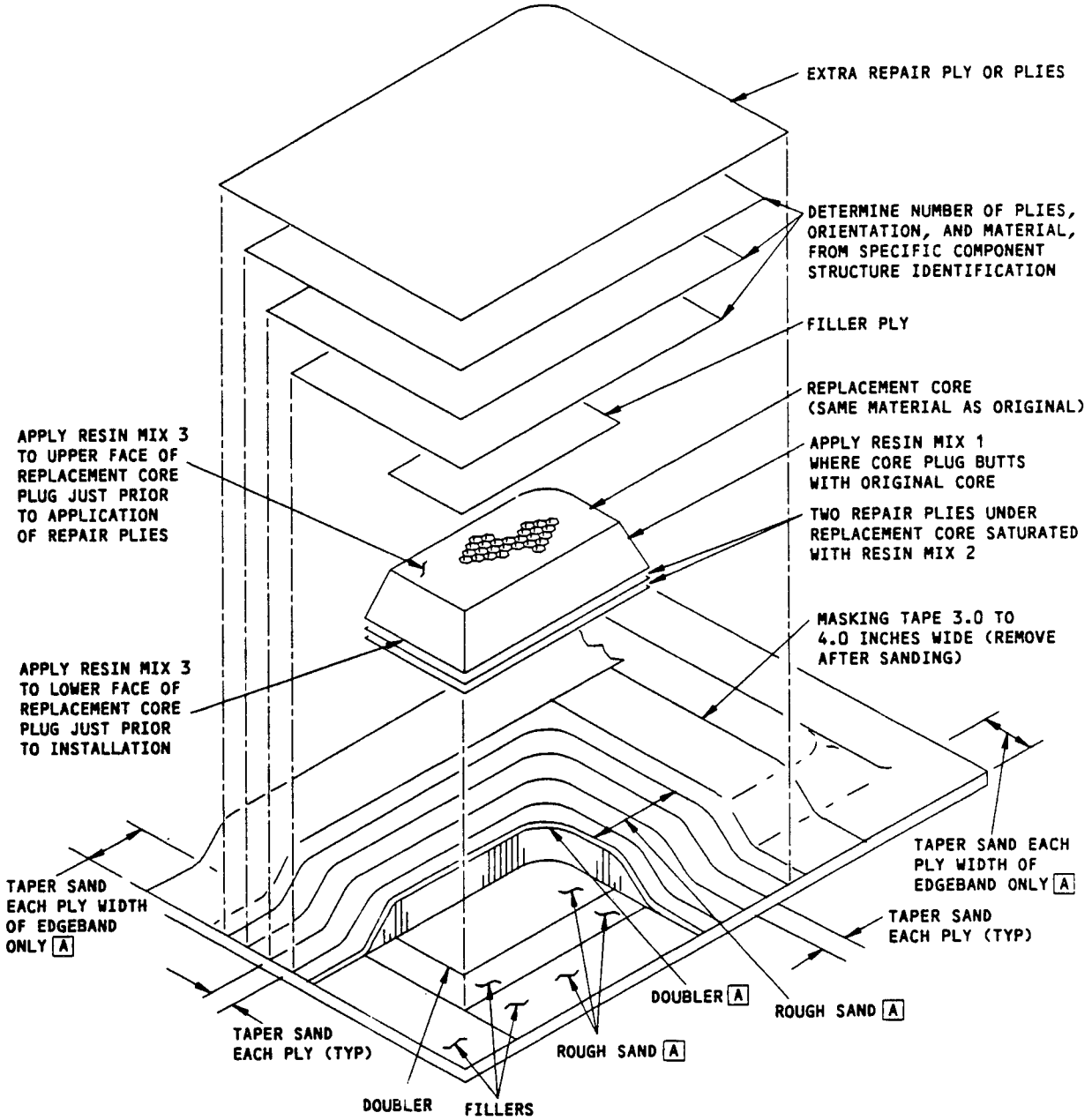

NOTES

A TAPER SANDING OPTIONAL TO ROUGH SANDING ON SKIN AND DOUBLER PLIES OVER CORE

Repair 8 - Repair of Damage to Honeycomb Core on Edge of Honeycomb Panel
Figure 16

136801

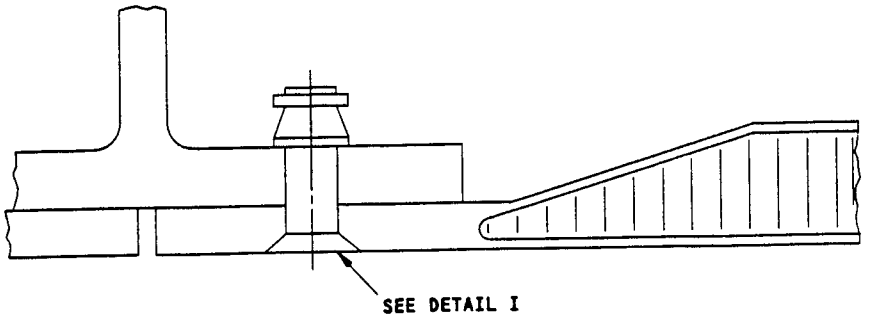

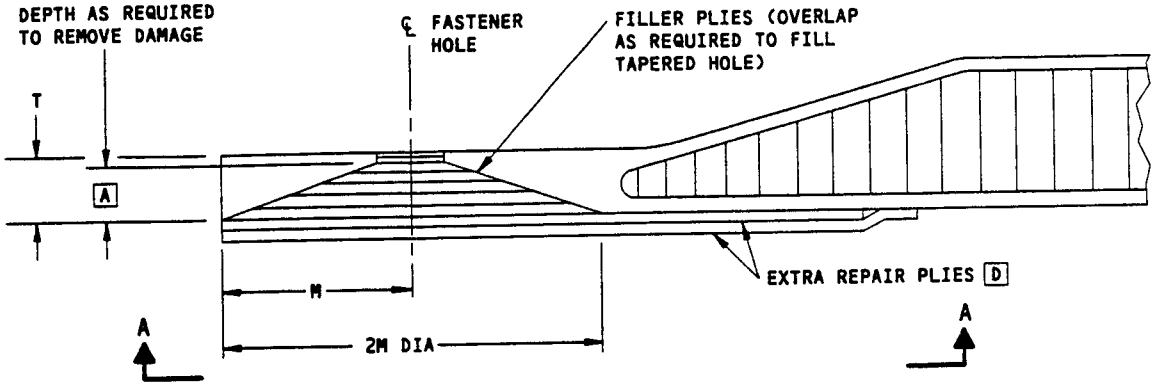

REPAIR OF HONEYCOMB PANEL SHOWN
REPAIR OF SOLID LAMINATE SIMILAR

DETAIL I

NOTES

- M = 5T MAXIMUM AS SHOWN, WHERE T IS THE THICKNESS OF THE EDGEBAND. DO NOT CUT INTO CORE
- THIS REPAIR APPLIES ONLY WHERE NO MORE THAN TWO ATTACH HOLES ARE DAMAGED IN ANY TEN CONSECUTIVE ATTACH HOLES
- D EQUALS FASTENER DIAMETER

A APPLY FILLER PLIES AS REQUIRED TO FILL THE DAMAGED AREA

B EXTEND EXTRA REPAIR PLY FAR ENOUGH SO THAT IT EXTENDS AT LEAST 0.50 OR 1.00 INCH PAST EDGE OF DAMAGED AREA E

C EXTEND EXTRA REPAIR PLY FAR ENOUGH TO PROVIDE AT LEAST 2D EDGE MARGIN

D ORIENT EXTRA REPAIR PLIES IN THE SAME DIRECTION AS THE ORIGINAL OUTER LAYER

E SOME 350°F (177°C) ORIGINAL CURE TEMPERATURE COMPONENTS IN HEAT-AFFECTED ZONES REQUIRE 1.00 MINIMUM OVERLAP FOR EACH REPAIR PLY AND ARE IDENTIFIED IN THE COMPONENT REPAIR CHARTS. ALL OTHER COMPONENTS REQUIRE 0.50 MINIMUM OVERLAP

Repair 9 - Repair of Damaged Panel Attach Hole in Honeycomb Panel Edgebands or Along Edges of Solid Laminate Panels
Figure 17 (Sheet 1)

136784

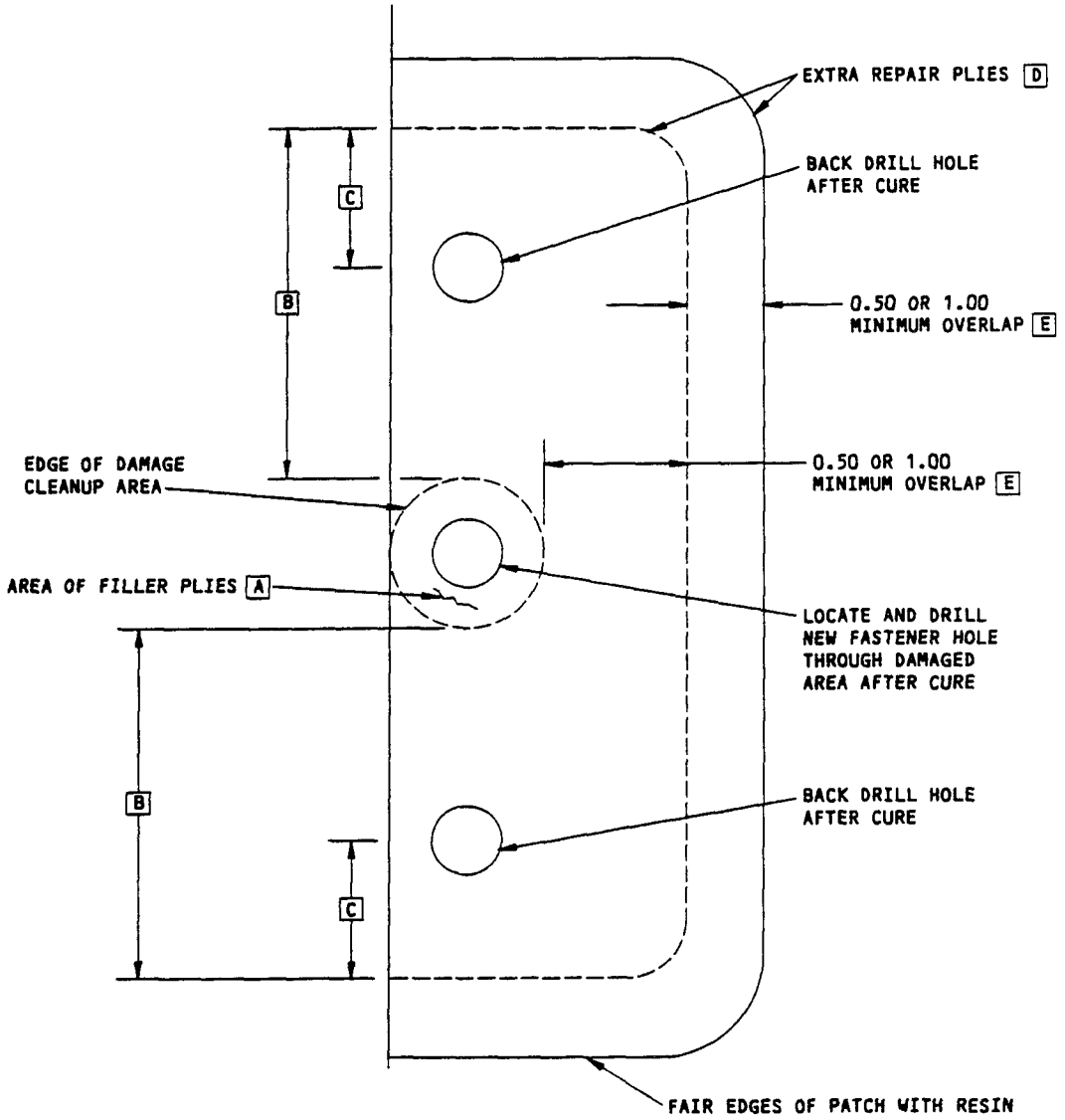

SECTION A-A

Repair 9 - Repair of Damaged Panel Attach Hole in Honeycomb Panel Edgebands or Along Edges of Solid Laminate Panels
Figure 17 (Sheet 2)

136802

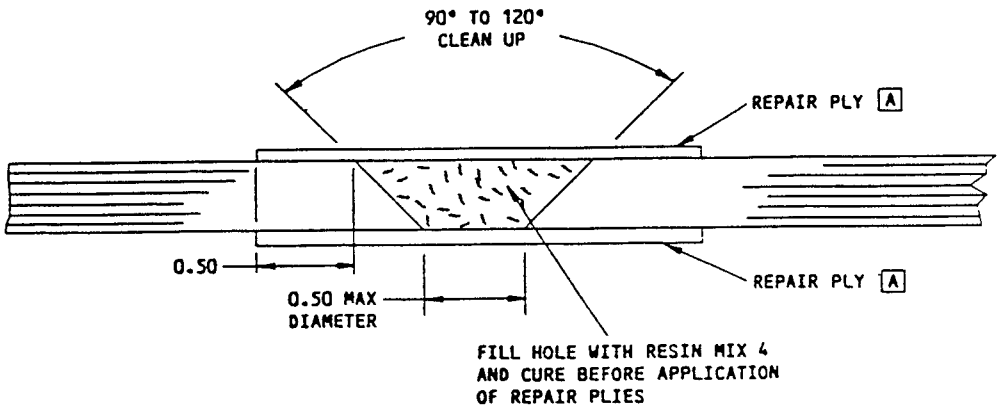

NOTES

A IF THE ORIGINAL SURFACE PLY IS ARAMID OR GLASS FABRIC, PREPARE AND APPLY ONE PLY OF BMS 9-3, TYPE H-2 OR H-3 GLASS FABRIC PER PAR. 2.E. IF THE ORIGINAL SURFACE PLY IS GRAPHITE TAPE OR FABRIC, PREPARE AND APPLY ONE PLY OF BMS 9-8, TYPE I, CLASS 2, STYLE 3K-70-P GRAPHITE FABRIC PER PAR. 2.E. ORIENTATION IS TO BE THE SAME AS THE ORIGINAL SURFACE PLY

Repair 10 - Repair of Damage, 0.50-inch Diameter or Less, to Solid Laminates 136785
Figure 18

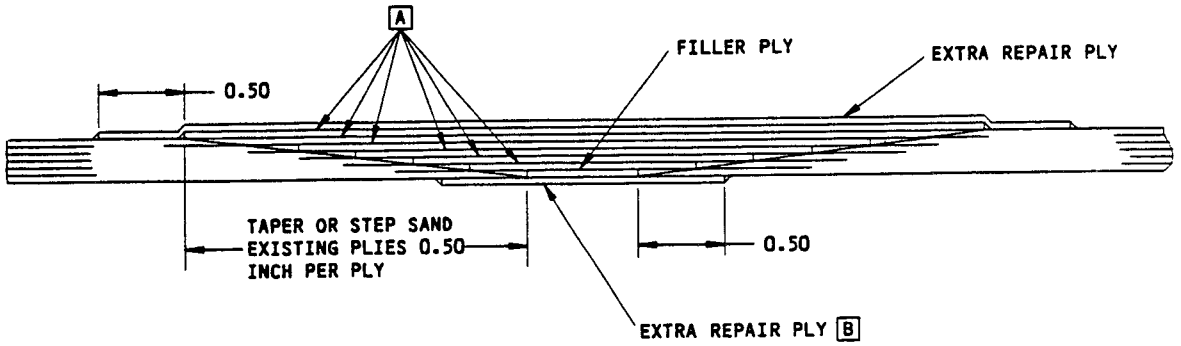

NOTES

A DETERMINE NUMBER OF PLIES, ORIENTATION, AND MATERIAL FROM SPECIFIC COMPONENT STRUCTURE IDENTIFICATION

B EXTRA REPAIR PLIES AT THIS LOCATION ARE REQUIRED ONLY IF THE DAMAGE PENETRATES THIS SURFACE

Repair 11 - Repair of Damage, Greater than 0.50-inch Diameter, to Solid Laminates 136803
Figure 19

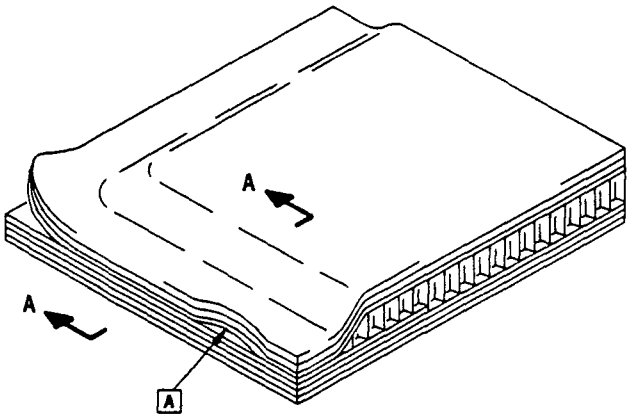

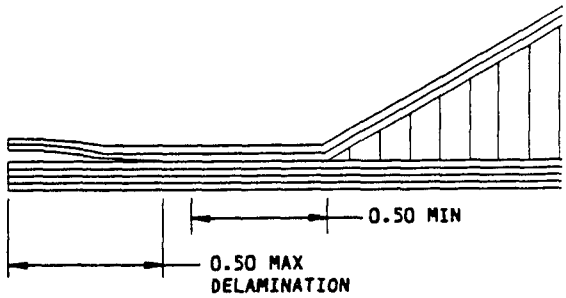

TYPICAL SECTION A-A

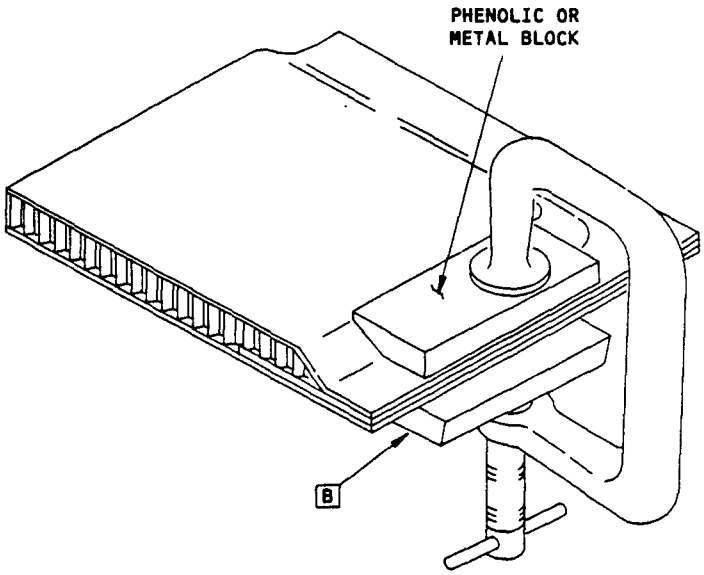

NOTES

- REFER TO PARAGRAPH 3.F. FOR COMPLETE REPAIR INSTRUCTIONS

[A] FORCE RESIN MIX 2 INTO DELAMINATED AREA

[B] CLAMP PLIES TOGETHER AND CURE

Repair 6 - Repair of Delaminations Between Plies of Panel Edgeband
Figure 20

333235

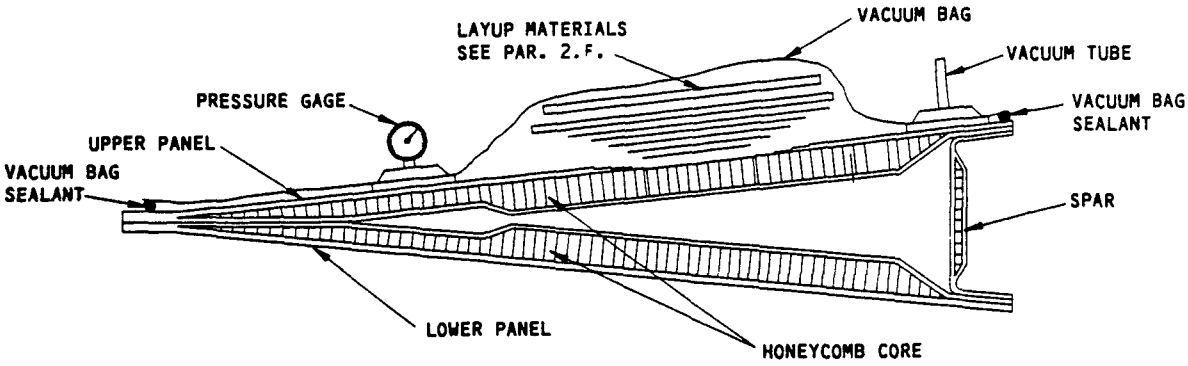

ACCEPTABLE - VACUUM BAG SEALED TO ONE SIDE ONLY

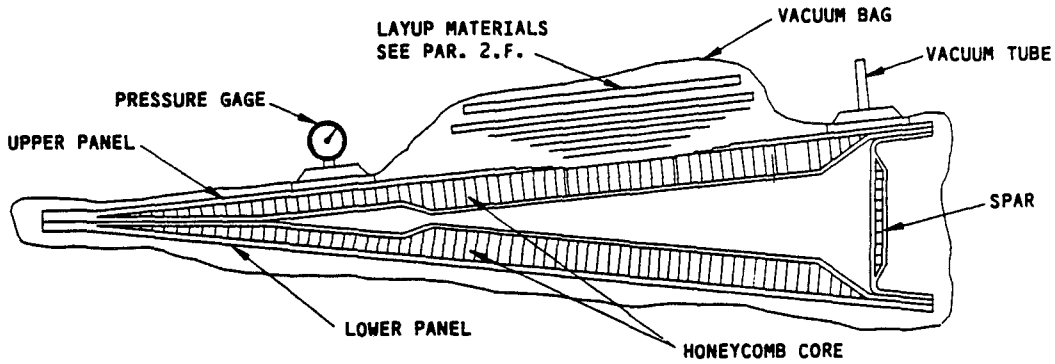

NOT ACCEPTABLE - VACUUM BAG SEALED AROUND ENTIRE PART

PARTS CONSISTING OF UPPER AND LOWER PANELS [A]

NOTES

- REFER TO PAR. 2.F. FOR LAYUP AND BAGGING PROCEDURES

[A] THIS TYPE OF COMPONENT MUST NOT BE COMPLETELY SEALED IN A VACUUM BAG. DAMAGE TO PART WILL OCCUR. VACUUM BAG ONE SIDE OF COMPONENT ONLY

[B] THIS TYPE OF COMPONENT MAY BE COMPLETELY SEALED IN A VACUUM BAG OR MAY BE SEALED ON ONE SIDE ONLY

Vacuum Bagging Restrictions
Figure 21 (Sheet 1)

333236

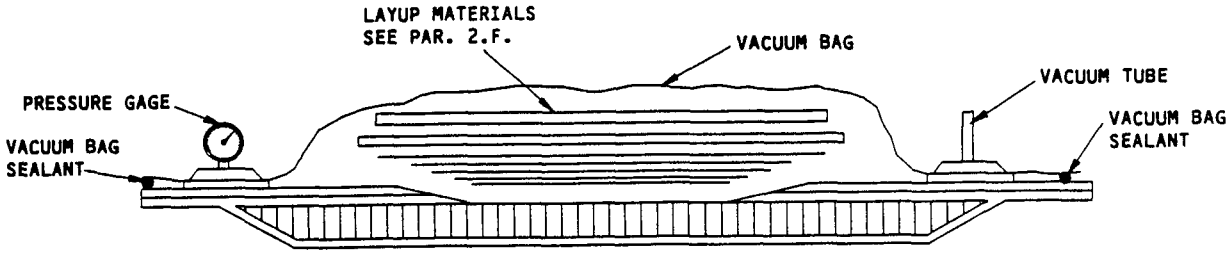

ACCEPTABLE - VACUUM BAG SEALED TO ONE SIDE ONLY

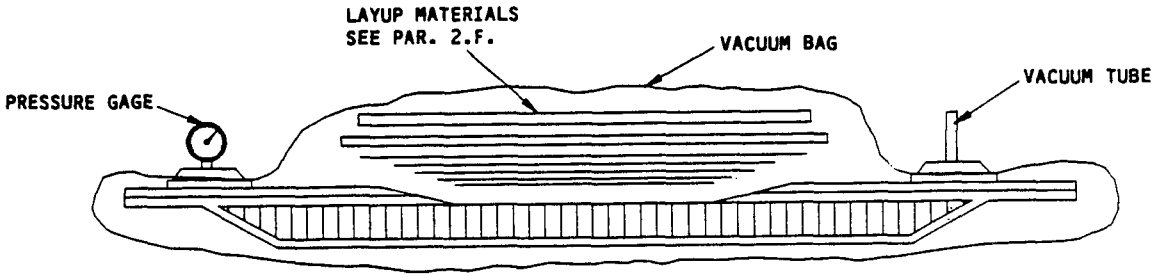

ACCEPTABLE - VACUUM BAG SEALED AROUND ENTIRE PART

PARTS CONSISTING OF ONE PANEL [B]

Vacuum Bagging Restrictions
Figure 21 (Sheet 2)

333237

LOCATIONS OF PRINCIPAL COMPOSITE COMPONENTS

1. General

A. This subject contains information pertaining to the location of principal graphite, aramid, and graphite/aramid/glass hybrid composite components. Reference is made to specific component repair, allowable damage, and identification subjects.

B. Refer to Fig. 1, Table I for principal graphite, aramid, and graphite/aramid/glass hybrid components manufactured at 250°F (121°C) cure temperature.

C. Refer to Fig. 1, Table II for principal graphite, aramid, and graphite/aramid/glass hybrid components manufactured at 350°F (177°C) cure temperature.

D. Refer to 51-40-9 for locations of principal fiberglass components.

Component Description	Reference Drawing(s)	Specific Component Subjects		
		Identification	Allowable Damage	Repair
Nose Landing Gear Door Skin	65-50520 65C28111	52-80-1		52-80-2
Main Landing Gear Door Skin	65C27197	52-80-1		52-80-2
Main Landing Gear Door Fairing Skin	65C27197	52-80-1		52-80-2
Elevator Tip	65C25746	55-20-2		55-20-6
Elevator Fairing Skin	65C25746	55-20-2		
Elevator Tab Fairing	65C26384	55-20-2		
Rudder Tip Fairing Skin	65C25841	55-40-2	55-40-1	55-40-6
Wing Trailing Edge Skin	65-46410	57-30-2	57-30-1	57-30-4

Locations of principal graphite, aramid, and graphite/aramid/glass hybrid reinforced epoxy laminates and nonmetallic honeycomb sandwich composites manufactured at 250°F (121°C) cure temperature.

Table I

NOTES

- REFER TO SPECIFIC IDENTIFICATION SUBJECT FOR PICTORIAL REPRESENTATION.
- REFER TO SPECIFIC COMPONENT REPAIR SUBJECT FOR AUTHORIZED REPAIRS AND REPAIR LIMITS
- REFER TO SPECIFIC ALLOWABLE DAMAGE SUBJECT FOR ALLOWABLE DAMAGE DATA

Locations of Principal Composite Components
Figure 1 (Sheet 1)

Component Description	Reference Drawing(s)	Specific Component Subjects		
		Identification	Allowable Damage	Repair
Horizontal Stabilizer Skin	65C17850	55-10-2	55-10-1	55-10-3
Horizontal Stabilizer Structure Spars, Stiffener, Rib, T.E. Beam	65C17830	55-10-2	55-10-1	55-10-3
Elevator Structure - Rib, Skin, Spar, Stiffener	65-73795	55-20-2	55-20-1	55-20-6
Elevator Tab Structure - Spar	65C26485	55-20-2	55-20-1	55-20-6
Elevator Skin	65C25753	55-20-2	55-20-1	55-20-3
Elevator Tab Skin	65C26384	55-20-2	55-20-1	55-20-3
Rudder Skin	65C25961	55-40-2	55-40-1	55-40-5
Rudder Structure - Rib, Spar, Strap	65C25841	55-40-2	55-40-1	55-40-6
Aileron Skin	65C25911	57-50-2	57-50-1	57-50-6
Aileron Structure - Rib, Spar, Rib Post	65C25911 65C25914	57-50-2	57-50-1	57-50-6
Spoiler Skin (Skin, T.E. Filler, Wedge Filler)	65C25242 65C25243 65C25251 65C25252	57-50-2	57-50-1	57-50-5
Spoiler Structure - Rib, Spar	65C25242 65C25251	57-50-2	57-50-1	57-50-5

Locations of principal graphite, aramid, and graphite/aramid/glass hybrid reinforced epoxy laminates and nonmetallic honeycomb sandwich composites manufactured at 350°F (177°C) cure temperature.

Table II

Locations of Principal Composite Components
Figure 1 (Sheet 2)

ALLOWABLE DAMAGE AND REPAIR OF ALUMINUM FOIL (BMS 8-289)

1. General

   A. This subject contains allowable damage and repair data for aluminum foil (BMS 8-289).

   B. Refer to Fig. 1 for location of aluminum foil on the airplane.

   C. The allowable damage and repairs contained in this subject apply only to aluminum foil ply on glass fabric and composite panels. For allowable damage limits or repairs for damage to underlying plies, see the specific component allowable damage or repair subject.

      NOTE: Repair any damage to underlying plies before repairing aluminum foil.

   D. Store Resin Mix 1, and Resin Mix 2 at 40°F (5°C) to 80°F (27°C) in sealed containers. An identification label must accompany the material inside the bag with the following information: BMS number, type, class, grade, supplier name and product designation, batch number, and date of manufacture.

   E. Refer 51-20-3 for sources of materials.

2. Allowable Damage for Aluminum Foil (BMS 8-289)

   A. Cracks or slits up to 4.0 maximum length are permitted provided they are not over 50% of the panel dimension.

   B. Holes and punctures up to 3.0 maximum diameter are permitted provided they are 6.0 from any other damage. Maximum cumulative allowable damage for each 4.0 sq. ft. is 29 square inches.

   C. Dents and delamination are permitted provided there are no cracks, slits, or holes.

   D. Protect damage that penetrates the aluminum foil with aluminum foil tape (speed tape) 3M-Y436 or equivalent and inspect as given in par. 2.E. or permanent repair as given in this section of the manual.

   E. Record location of damage and inspect at every airplane "A" check. Replace aluminum foil tape if any peeling or deterioration is evident.

   F. Damage that exceeds the allowable limits must be repaired per par. 3. or par. 4.

3. Time-Limited Repair for Aluminum Foil (BMS 8-289)

CAUTION: THIS TIME-LIMITED REPAIR HAS FAA APPROVAL CONTINGENT UPON REPLACEMENT WITH A PERMANENT REPAIR PER PAR. 4 NO LATER THAN THE NEXT AIRPLANE "C" CHECK. FAILURE TO COMPLY WILL RESULT IN AN UNACCEPTABLE AND UNAUTHORIZED REPAIR.

WARNING: KEEP SOLVENTS AWAY FROM SOURCES OF HEAT, FIRE, OR SPARKS. HEAT, FIRE, OR SPARKS CAN CAUSE AN EXPLOSION. AVOID CONTACT OF SOLVENT WITH SKIN, EYES, AND CLOTHING. WEAR EYE PROTECTION AND USE MECHANICAL VENTILATION OR RESPIRATORY PROTECTION WHEN WORKING IN A CONFINED SPACE OR AREA. BREATHING VAPORS OR ALLOWING SOLVENT TO CONTACT SKIN OR EYES IS HAZARDOUS.

CAUTION: DO NOT ALLOW STANDING SOLVENT ON PART. DAMAGE TO PART WILL OCCUR.

A. Wipe damaged area with a clean cloth moistened with solvent, Series 97 (Ref AMM/SOPM 20-30-97) to remove any contamination.

B. Cut a sheet of bare aluminum foil such that it will overlap the edge of the damage by 1.0 minimum.

C. Place aluminum foil sheet over the damaged area such that it overlaps the edge of the damage by 1.0 minimum.

D. Apply aluminum foil tape (speed tape) 3M-Y436 or equivalent around the edges of the aluminum foil sheet.

4. Permanent Repair for Aluminum Foil (BMS 8-289)

A. Determine extent of damage.

(1) Use this repair only for damage exclusively to the aluminum foil.

(2) For structural damage extending into underlying plies, repair as given in 51-40-13, 51-40-14, 51-40-15, or 51-40-19 as applicable.

(3) Refer to Fig. 5 for the following repair procedure.

B. Preparation for repair.

(1) Mask off the area surrounding the damage with masking tape.

(2) Remove damaged foil by peeling or abrading. Do not damage underlying glass fibers.

(3) Abrade and solvent wipe the primer on the aluminum foil on a 3-inch minimum border around the damaged area.

(4) Remove primer on a 1.0-inch minimum border; abrade and solvent wipe foil surface to water-break-free condition. A water-break-free surface will hold a film of water so that it does not bead up. Spotty traces of primer covering up to 10% of border area are acceptable.

(5) Abrade and solvent wipe exposed composite surface. Do not damage underlying glass fibers.

C. Aluminum Foil Replacement

(1) Cut a BMS 8-289 aluminum foil patch the size and shape of the area to be repaired. (BMS 8-289 Type 0/250/x/x/x Form I or II, where x = optional thickness, alloy, and adhesive thickness.)

(2) Apply Resin Mix 2 as shown in Fig. 2 or EA 956 (BMS 5-12B) or EA 9396 to the exposed fiberglass area.

(3) Butt-splice the BMS 8-289 patch, adhesive side down, to the existing foil (no overlap, 0.25 inch max gap). Press down and remove excess resin (squeeze-out) with cheesecloth wetted with BMS 11-7, MPK (high purity), MEK, MIBK, or acetone.

(4) Cut a splice strip of BMS 8-289 Type 0/250/x/x/x, Form II preferred, Form I optional. Form II splice strip may be pieced and trimmed to fit the repair area. If Form I splice strip is used, chemical conversion coating treat nonadhesive side of splice strip and perforate splice strip centerline with 0.5 diameter (nominal) holes 2.0 inches (nominal) on center.

(5) Chemical conversion coating treat all aluminum surfaces that will contact splice strip and cover ply.

(6) Place the splice strip, adhesive side up, over the aluminum surface so that it has a minimum 1.0 overlap on each side of the splice line. The outer edge of the splice strip is to be at least 1.0 from the edge of part.

NOTE: Local spots of Resin Mix 2, EA 956 or EA 9396, approximately 0.25 diameter 4.0 spacing may be used, if necessary, on the non-adhesive side of the splice strip to hold it in place. Do not use large amounts of resin for this purpose

Splicing is not allowed on the laminate edge-band faying surface.

(7) Place a cover ply of BMS 9-3 Type D fiberglass impregnated with Resin Mix 2 EA 956 or EA 9396 over the repair so that it overlays the repair, including the splice strip, by 1.0 minimum on all sides. On graphite panels that have a glass fabric isolation ply between the flame-sprayed aluminum coating and the graphite plies (e.g. the rudder), apply a glass fabric ply to the repair area as follows:

(a) Cut a piece of BMS 9-3, Type H-2 or Type H-3 glass fabric larger than the original glass fabric isolation ply.

(b) Cut two pieces of parting film 3.0 larger all around than the glass fabric.

(c) Tape down one piece of parting film to a smooth surface.

(d) Lay glass fabric onto parting film.

(e) Prepare Resin Mix 1 as shown in Fig. 2.

(f) Spread resin over glass fabric to adequately cover fabric evenly.

(g) Lay second piece of parting film over glass fabric.

(h) Work resin thoroughly and evenly into fabric with a squeegee or roller in order to impregnate the fabric and to remove entrapped air.

(i) Work excess resin to edges of fabric.

(j) Cut the impregnated glass fabric to the same size as the original glass fabric isolation ply. The parting film on both sides of the fabric decreases fraying of the edges while cutting the fabric.

(k) Apply a coat of Resin Mix I to the repair area on the panel.

CAUTION: ENSURE THAT PARTING FILM IS REMOVED FROM GLASS FABRIC PRIOR TO LAYUP AND CURING. NONCOMPLIANCE WILL RESULT IN A RUINED REPAIR.

(l) Remove parting film from one side of glass fabric and place exposed face against the repair area.

(m) Remove wrinkles and entrapped air with a squeegee. Do not apply excessive pressure or repair will be deficient in resin.

(n) Remove second piece of parting film from glass fabric.

(8) Apply parting film breather, heat blanket and vacuum bag. Refer to Fig. 3 (Detail I) for the following layup procedure.

(a) Place a layer of perforated FEP parting film (1 mil thick) over the repair. Cut the FEP so that the edges extend 3.0 beyond the edge of the repair.

(b) If using an accelerated cure, secure three thermocouples (spaced evenly around repair) to the panel at the edge of the repair and secure them to the appropriate recorders.

(c) Place a layer of glass fabric over the perforated FEP as a surface breather. Cut the surface breather so that the edges extend 2.0 beyond the edge of the perforated FEP.

(d) Secure a vacuum line on the edge of the surface breather.

(e) Place the aluminum caul plate over the surface breather such that it covers the flame-sprayed PVA film.

(f) Place a layer of solid FEP parting film (2 mil thick) over the caul plate. Cut the solid FEP so that the edges are even with the perforated FEP.

WARNING: FOR ACCELERATED CURE, USE HEAT CURING EQUIPMENT THAT IS ACCEPTABLE TO LOCAL FIRE PROTECTION AUTHORITIES. FAILURE TO COMPLY COULD CAUSE PERSONNEL INJURY.

(g) If a heat blanket is used as a heat source, perform the following steps:

NOTE: A heat blanket, infrared heat lamp, or equivalent heat source may be used to accelerate the cure.

If the repair is made on structure too small to allow the heat blanket to be vacuum bagged, proceed to par. 4.C.(8)(h) and place heat blanket over the vacuum bag.

1) Place a heat blanket over the solid FEP. The heat blanket must extend 2.0 min beyond the edge of the repair.

2) Place controlling thermocouple over the center of the heat blanket.

3) Place four-to-six layers of glass fabric over the heat blanket. The glass fabric will insulate the heat blanket and prevent damage to the bagging film.

(h) Apply extruded sealing compound around the entire repair area, approximately 6.0 outside the edge of the heat blanket.

(i) Lay a piece of vacuum bag material over the entire repair area, sealing the edge with the extruded sealing compound. Pleat the vacuum bag where needed to prevent bridging of bag material and subsequent breakage. Pad all sharp objects and corners to prevent bag breakage. It is optional to vacuum bag the entire part.

NOTE: The entire part must be vacuum bagged and restrained in place to prevent delamination and distortion when the repair area exceeds 15% of panel area. Regardless of the method of heat application, restraining devices that maintain the contour and support the part must be used for large parts where sagging and distortion could occur due to the weight of the part.

(j) Evacuate the space under the vacuum bag and maintain a vacuum of 22 inches of mercury minimum.

(k) Check the vacuum bag for leaks.

(9) Cure Resin Mix 2 as shown in Fig. 4. EA 956 and EA 9396 will cure to handling strength in 24 hours minimum at 70-100° F. Full cure is achieved in 5 days at 70-100° F or can be accelerated to 1 hour at 180° F ±10° F. The adhesive foil will be sufficiently bonded with any of the above cure cycles.

(10) Refinish the repaired area according to 51-21 of the Maintenance Manual.

5. Permanent Repair of Aluminum Foil Joint Splice (BMS 8-289)

NOTE: This repair is applicable to electrical splice failures on fan cowls and to electrical splices which did not use perforated foil in the original design.

A. Determine extent of change.

(1) Use this repair for splice damage that includes no more than the cover ply and the aluminum foil.

(2) For structural damage extending into the underlying plies, repair as given in 51-70-4, 51-70-5, 51-70-7, 51-70-8, or 51-70-17 as applicable.

(3) Refer to Fig. 5 for the following repair procedure.

B. Preparation for repair.

NOTE: Do not extend the splice into the edgeband area of the panel.

(1) Mask off the area surrounding the damage with masking tape.

(2) Sand off the damaged cover ply.

(3) Peel off the remaining splice foil. The splice is 2.0 wide and will peel easily (Fig. 5, Detail III).

(4) Solvent wipe the 2.0 wide splice and an additional 2.0 on each side for a total width of 6.0.

(5) Abrade the 6.0 width cleaned area with Scotch-Brite.

(a) The 2.0 wide bare aluminum splice must be cleaned and abraded until a water break-free surface is obtained. A water break-free surface will hold a film of water without beading up.

(b) Do not abrade through the paint primer.

(6) Chemical conversion coating treat the bare aluminum.

C. Splice Strip Replacement

(1) Apply BMS 8-289 0/250/x/x/x adhesive-backed foil splice strip (Fig. 5, Detail IV). The x's stand for the optional foil thickness, alloy, and adhesive thickness.

(a) Use Form II foil applied adhesive side up. Overlap the bare aluminum on each side of the splice line by 1.0 minimum.

(b) Form I foil with 0.5 diameter holes on 2.0 centers is optional to Form II. Chemical conversion coating treat the nonadhesive side of the Form I foil and apply adhesive side up.

(2) Apply a cover ply, 4.5 width minimum, so it overlaps each side of the foil splice strip by at least 1.0. Use BMS 9-3, Type D fiberglass impregnated with BMS 8-301, Class 1 as given in par. 4.C.(7)(a).

(3) Apply parting film, breather, heat blanket and vacuum bag per par. 4.C.(8). Cure as shown in Fig. 4.

(4) Refinish the repaired area per 51-21 of the Maintenance Manual.

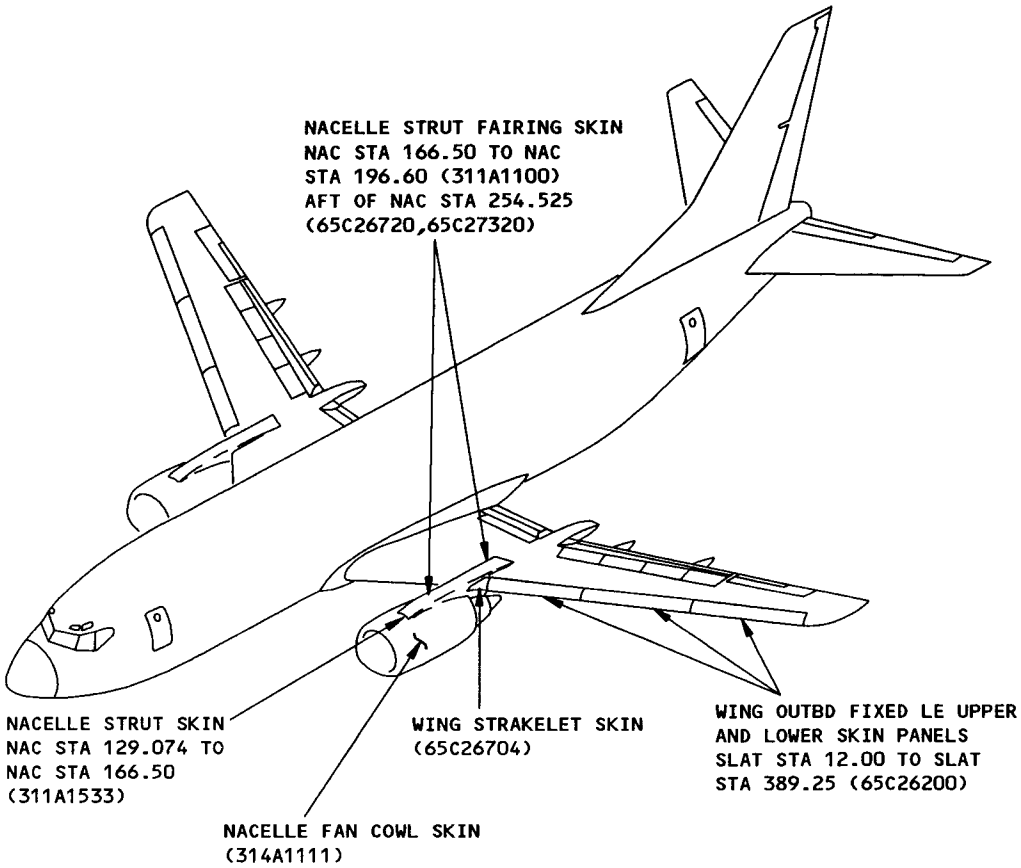

LEFT SIDE SHOWN
RIGHT SIDE OPPOSITE EXCEPT AS NOTED

Location of Aluminum Foil (BMS 8-289) on Inner Surface
Figure 1 (Sheet 1)

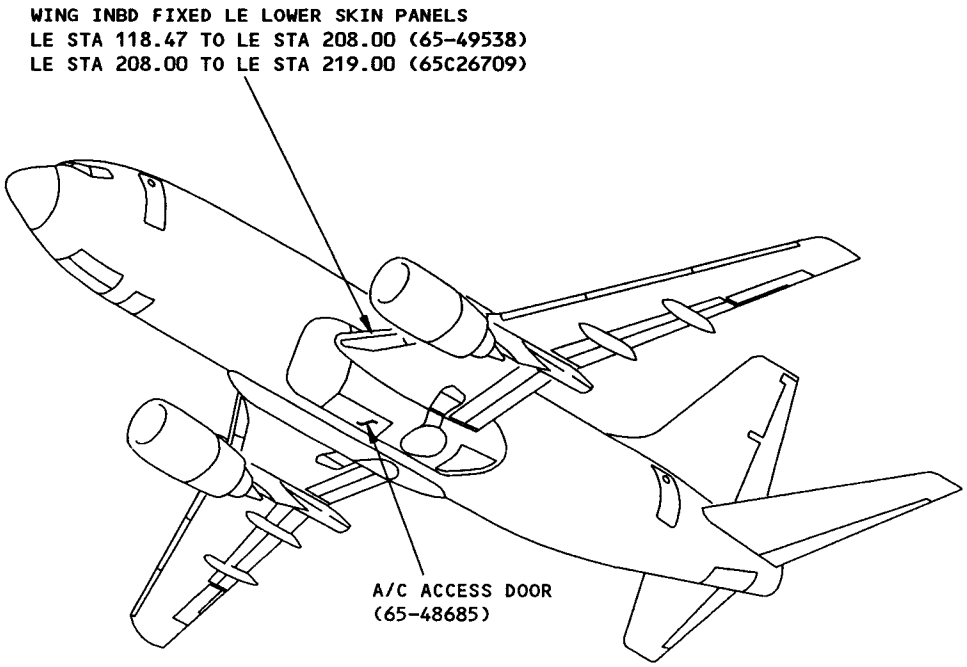

LEFT SIDE SHOWN
RIGHT SIDE OPPOSITE

Location of Aluminum Foil (BMS 8-289) on Inner Surface
Figure 1 (Sheet 2)

RESIN TYPE	COMPONENTS	PARTS BY WEIGHT	OPEN TIME BEFORE USE, OR POT LIFE OF MIXTURE	CURING TIME
RESIN MIX 1 (BMS 5-92, TYPE I) (ADHESIVE)	EC2216A GRAY EC2216B WHITE	140 100	2 HRS BELOW 100°F (38°C)	24 HRS MIN AT 65°F (19°C) TO 100°F (38°C). 180 ±10 MINUTES AT 110°F (43°C) TO 130°F (54°C). 130 ±10 MINUTES AT 150°F (66°C) TO 170°F (76°C)
RESIN MIX 2 (LAMINATING RESIN) (BMS 8-301 CLASS 1)	EA 9390A BASE EA 9390B HARDENER	100 ±5 56	2 HRS AT 77°F (25°C)	SEE TEXT AND FIG. 4

NOTES

- MATERIALS MUST GEL AT ROOM TEMPERATURE PRIOR TO HEATING. RATE OF HEAT RISE MUST BE NO GREATER THAN 7°F (4°C) PER MINUTE.
- REFER TO SRM 51-20-03 FOR SOURCES OF MATERIALS.
- USE THERMOCOUPLES TO MONITOR TEMPERATURE.

Resin Specifications, Mixing Procedures, and Curing
Figure 2

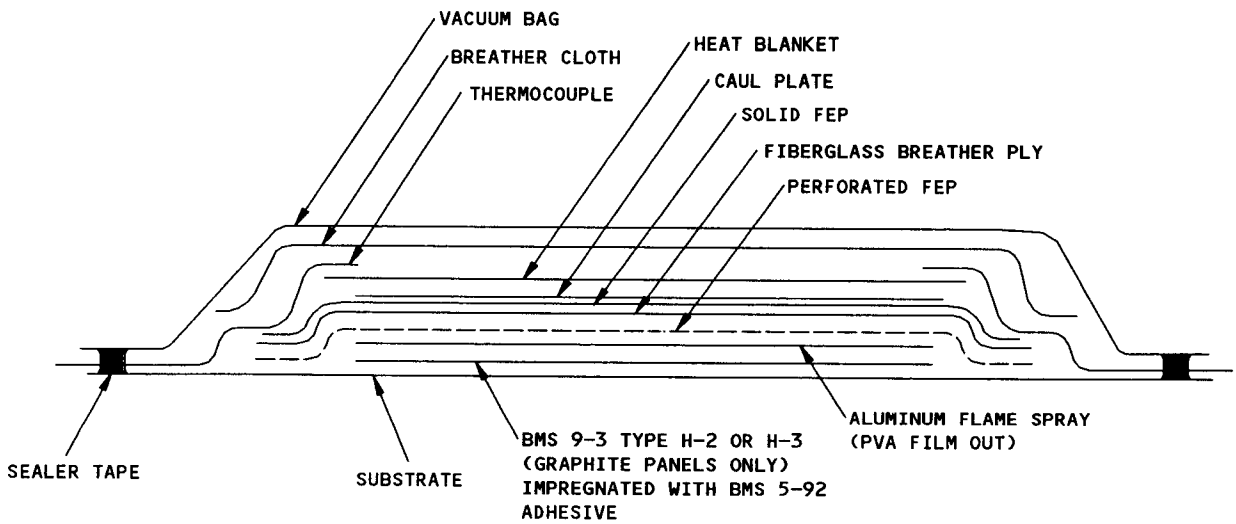

DETAIL I

Repair Layup
Figure 3

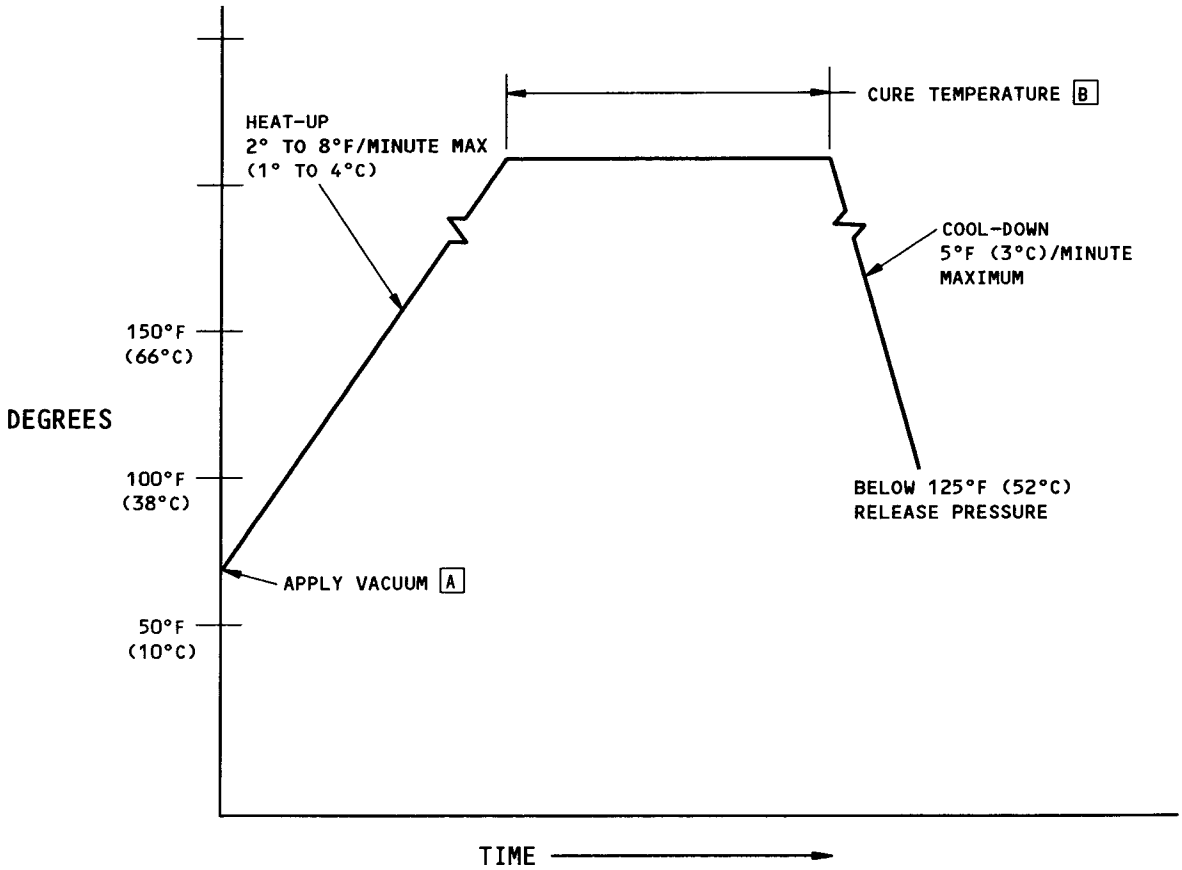

CURE CYCLE FOR REPAIR PLIES
DETAIL I

NOTES

A MAINTAIN 22 INCHES OF MERCURY VACUUM DURING THE ENTIRE CURE CYCLE

B CURE BMS 8-301, TYPE I FOR:
220 MINUTES AT 200 ±10°F (93 ±6°C)
180 MINUTES AT 230 ±10°F (110 ±6°C)

Cure Cycle
Figure 4

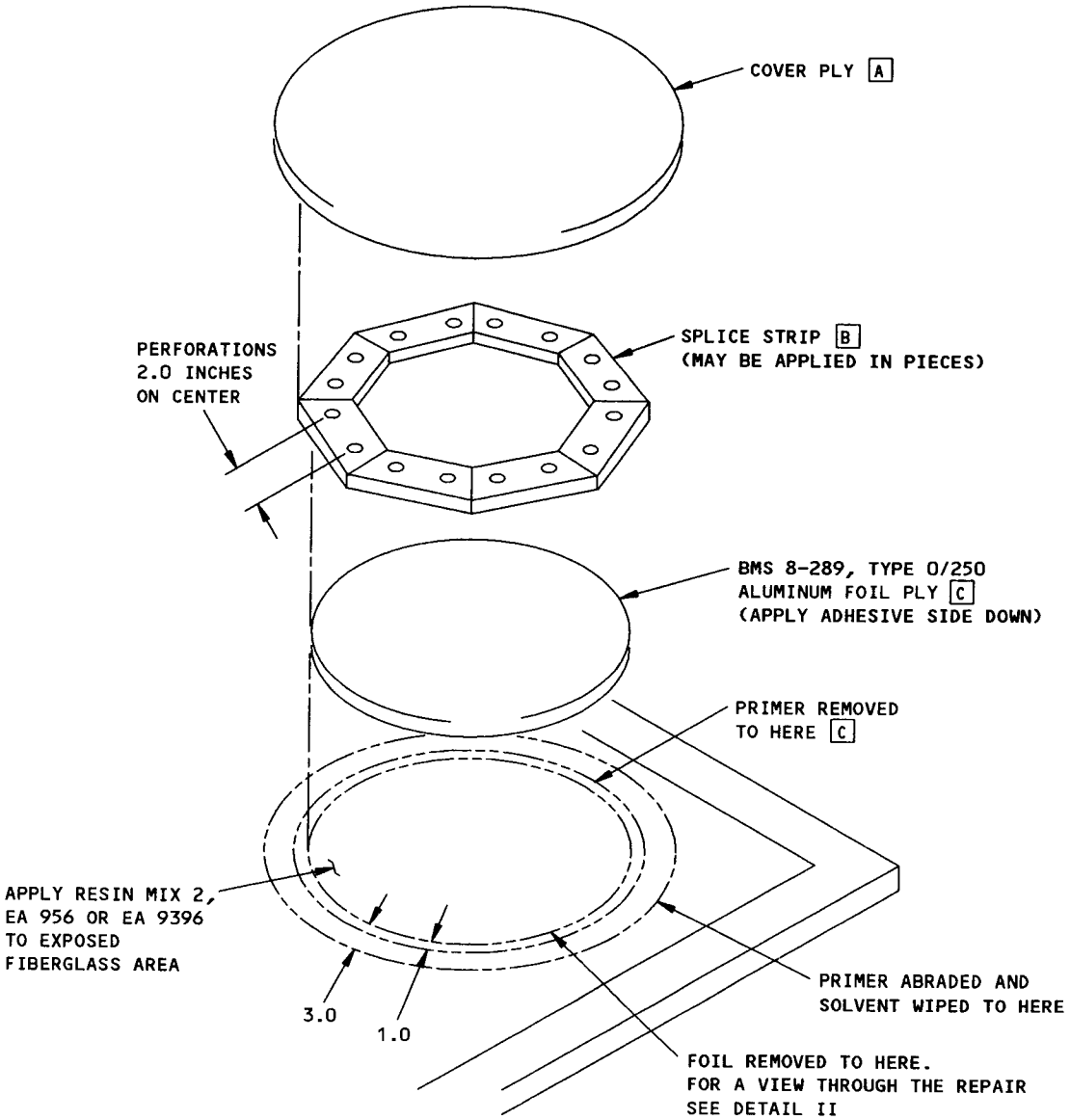

REPAIR PLY LAYUP
DETAIL I

Aluminum Foil Repair
Figure 5 (Sheet 1)

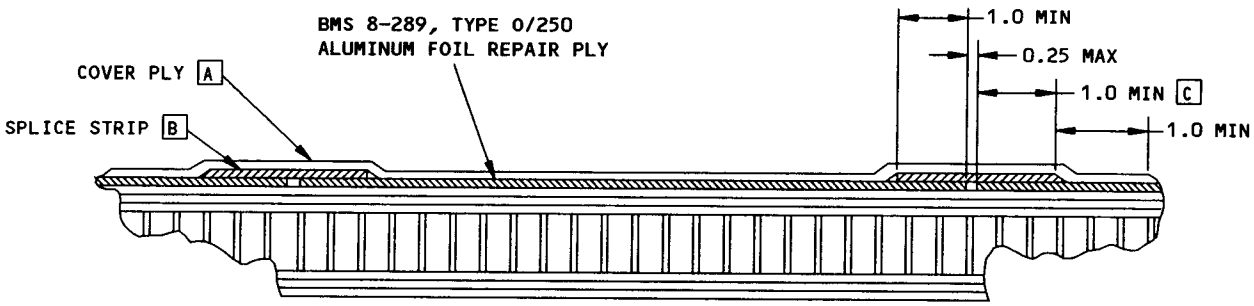

VIEW THRU REPAIR
DETAIL II

MATERIAL	SHIPPING AND STORAGE LIFE		SHELF LIFE D	
	MAXIMUM TEMPERATURE E	DURATION (DAYS)	MAXIMUM TEMPERATURE	DURATION (HOURS)
BMS 8-289 TYPE O/250	10°F (-12°C)	180	95°F (35°C)	240

STORAGE AND SHELF LIFE OF BMS 8-289

TABLE I

NOTES

A BMS 9-3, TYPE D FIBERGLASS IMPREGNATED WITH RESIN MIX 2, EA 956 OR EA 9396.

B BMS 8-289, TYPE O/250 WITH THE ADHESIVE SIDE UP. FORM II PREFERRED; FORM I OPTIONAL. IF FORM I IS USED, ALODINE TREAT NON-ADHESIVE SIDE AND PERFORATE CENTERLINE WITH 0.5 DIA HOLES, 2.0 INCHES ON CENTER.

C APPLY A CHEMICAL CONVERSION COATING.

D SHELF LIFE HOURS ACCUMULATE FROM THE DATE OF REMOVAL FROM STORAGE UNTIL START OF THE REPAIR CURE CYCLE.

E QUALIFIED PRODUCTS, GUARANTEED BY THE SUPPLIER TO MEET SPECIFICATION REQUIREMENTS AFTER 360 DAYS AT 95°F (35°C), MAY BE STORED AT 95°F (35°C) MAX.

F ABRADE WITH SCOTH-BRITE.

Aluminum Foil Repair
Figure 5 (Sheet 2)

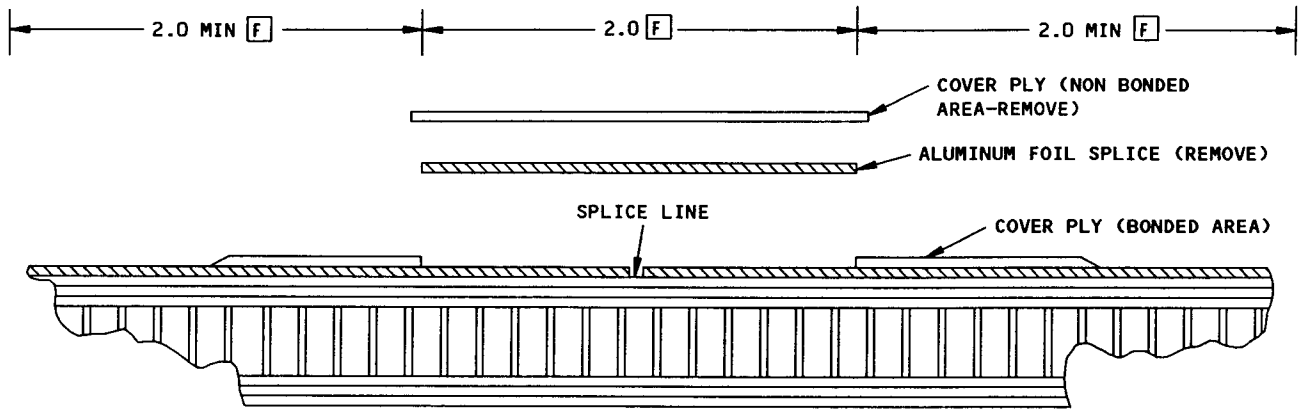

ALUMINUM FOIL SPLICE REMOVAL
DETAIL III

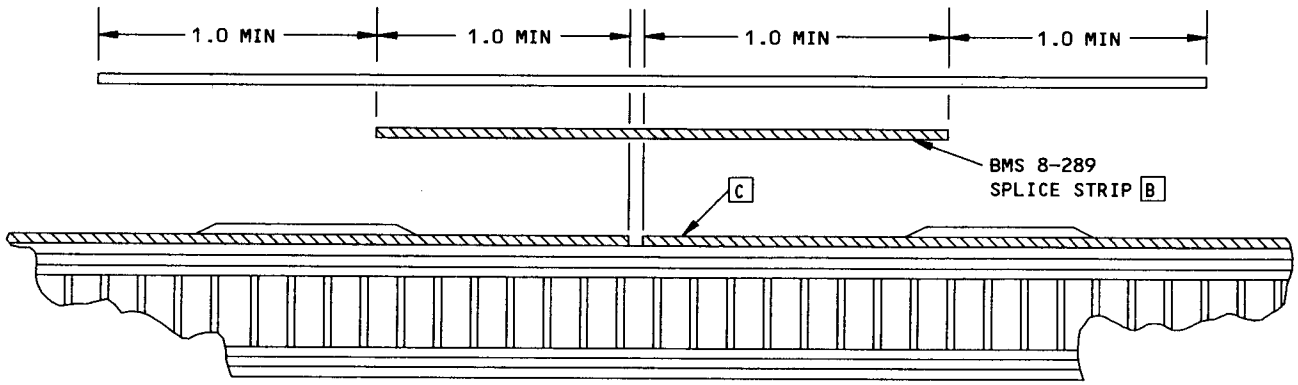

ALUMINUM FOIL SPLICE REPAIR
DETAIL IV

Aluminum Foil Repair
Figure 5 (Sheet 3)

GLASS FABRIC STRENGTHENED EPOXY LAMINATES AND NONMETALLIC HONEYCOMB SANDWICH REPAIRS - 250°F (121°C) CURE

1. General

A. These repairs will not have an effect on a Structurally Significant Item (SSI) given in SRM 51-00-4, Fig. 3. Thus, no change to the Supplemental Structural Inspection Document (SSID) inspection program is necessary.

WARNING: SOME OF THE EQUIPMENT USED TO HEAT CURE THESE REPAIRS MAY CAUSE A FIRE OR AN EXPLOSION WHEN USED NEAR AN AIRPLANE WHICH CONTAINS OR HAS CONTAINED FUEL. GET THE APPROVAL OF THE LOCAL FIRE DEPARTMENT TO USE THE SPECIFIED EQUIPMENT. FAILURE TO OBEY COULD CAUSE INJURY TO PERSONS AND DAMAGE TO THE AIRPLANE.

DO NOT BREATHE THE VAPORS OR LET THE SOLVENT TOUCH YOUR SKIN OR EYES. USE NEOPRENE GLOVES WITH COTTON LINERS, PROTECTIVE CLOTHING, AND EYE GOGGLES. IF THE CHEMICAL TOUCHES YOUR SKIN, CLEAN YOUR SKIN WITH WATER. IF THE CHEMICAL SHOULD GET IN YOUR EYES, FLUSH THEM WITH LARGE QUANTITIES OF WATER AND GET MEDICAL HELP. MAKE SURE THERE IS A GOOD FLOW OF AIR WHERE YOU DO THE WORK OR USE RESPIRATORY EQUIPMENT WHEN YOU WORK IN A CONFINED PLACE. FAILURE TO OBEY COULD CAUSE INJURY TO PERSONS.

CAUTION: DO NOT USE 350°F (177°C) CURE REPAIR MATERIALS ON 250° (121°C) CURED PARTS. FAILURE TO OBEY WILL CAUSE AN UNSATISFACTORY REPAIR.

B. This section contains repair data for components made from epoxy resin strengthened with layers of glass fabric. The cure temperature for these repairs is 250°F (121°C). The most common assembly is a sandwich of two laminated skins divided by a nonmetallic honeycomb core. A solid laminate is used for small components, honeycomb edgebands, some secondary structure, and at fitting locations. A different name for glass fabric is fiberglass cloth.

CAUTION: BEFORE YOU USE THESE REPAIR INSTRUCTIONS, REFER TO THE APPLICABLE COMPONENT STRUCTURE REPAIR SECTION FOR THE COMPONENT MATERIAL AND REPAIR LIMITS. 250°F (121°C) CURE REPAIRS WILL NOT HAVE THE STRENGTH OR DURABILITY OF COMPONENTS INITIALLY MADE FROM 350°F (177°C) CURE MATERIALS. THUS, THESE REPAIRS ARE LIMITED TO THE COMPONENTS SHOWN IN THE APPLICABLE STRUCTURE REPAIR SECTION. FAILURE TO OBEY WILL CAUSE AN UNSATISFACTORY REPAIR.

C. Allowable damage, repair limits, and repair data are found in the chapter/section/subject for the applicable structural component.

D. Use the applicable fixtures to hold large components to prevent distortion of the structure

BOEING PROPRIETARY - Copyright © - Unpublished Work - See title page for details.

E. Do the repair in a clean location. Repairs done in locations in which the air contains oil mist, exhaust fumes, gases, soot, rain, dust or other unwanted materials are not permitted. A tent can be used to protect the repair area from contamination.

F. Prevent repair surface contamination. Do not touch the cleaned parts or the adhesive with bare hands. Use clean, white, lint-free gloves when you move the parts.

G. Keep BMS 5-90, BMS 5-51, and BMS 5-129 adhesives below 0°F (-18°C). Keep BMS 8-79 and BMS 8-289 preimpregnated (prepreg) materials below 10°F (-12°C). Keep all materials in sealed moisture-proof bags. Write the time in and out of refrigeration.

Identify with a label the material in the bag with the data which follows:

BMS type
Class
Grade
Supplier name
Batch number
Date of preparation

H. Keep the Resin System 1, BMS 5-25 adhesive and BMS 5-92 adhesive at 40°F (4°C) to 80°F (27°C) in sealed containers.

Identify with a label the material in the bag with the data which follows:

BMS type
Class
Grade
Supplier name
Batch number
Date of preparation

I. Refer to SRM 51-20-4 for sources of repair materials and equipment.

J. Refer to SRM 51-10-7 for hole drilling and machining of composite structure.

K. Refer to SRM 51-70 for aerodynamic smoothness.

L. See Fig. 1 for the repair index.

M. See Fig. 2 for resin systems, adhesives, and preimpregnated (prepreg) materials.

BOEING PROPRIETARY - Copyright © - Unpublished Work - See title page for details.

N. Refer to SRM 51-40-9 to apply aluminum flame spray or conductive coatings.

O. For NDT procedures, refer to chapter 51 of the 737 Nondestructive Test Manual.

2. Repair Procedures Common to Various Repairs

CAUTION: DO NOT USE CHEMICAL PAINT REMOVERS. CHEMICAL PAINT REMOVERS CAN DAMAGE THE ADHESIVE RESIN SYSTEM.

A. Find the Limits of the Damage.

(1) Examine the part to find the limits of the damage.

(2) Inspect the part for the entry of water, oil, fuel or other unwanted material. Use instrumented Nondestructive Test (NDT) procedures to find contamination in honeycomb structure.

(3) Examine the part for delamination adjacent to the damage.

NOTE: Delamination can be detected by instrumental nondestructive inspection (NDT) methods or by the tap test. For the tap test, use a solid metal disk and tap the repair area lightly, but firmly. Void areas will give a dull sound. Solidily bonded areas will give a sharp ring. Refer to Part 1 of the Nondestructive Test.

B. Remove the Damage.

(1) Cut out the damage and make a smooth circular or oval shape with rounded corners. Make sure that you do not damage any plies, core, or adjacent structure which is not damaged.

NOTE: Remove only the damaged plies, damaged doublers, and damaged fillers.

(2) Carefully remove the core if it is also damaged. Cut it to the same dimension as the cutout in the skin. Do not damage the opposite skin Make sure all the damage is removed For cores more than 1.0 inch thick, you can make a partial depth core repair. Remove a minimum of 0 5 inch in depth from the core.

NOTE. When you use a potted core repair, it is not necessary to remove the damaged core.

(3) In locations where the contamination cannot be cleaned or dried as specified in par. 2.C. and 2.E.(5), then also remove the structure that has contamination.

(4) Remove any sealant from the area to be heated.

(5) If the inner surface of the opposite skin is also damaged, cut out the damage to a smooth shape as described in par. 2.B.(1).

BOEING PROPRIETARY - Copyright © - Unpublished Work - See title page for details.

2. B. (6) When you remove the core from the inner surface of the opposite skin, carefully remove the core down to the adhesive film.

(7) Examine the cutout location to make sure that all the damage is removed. Use instrumented Nondestructive Test (NDT) procedures.

C. Remove Water from Honeycomb Sandwich Structure (Fig. 8).

CAUTION: THE WATER THAT NORMALLY IS ABSORBED INTO THE PART MUST BE REMOVED BEFORE AN ELEVATED TEMPERATURE REPAIR IS MADE. THE REPAIR AND PART CAN BE DAMAGED IF THE WATER IS NOT REMOVED.

NOTE: The area to be dried must be at least 4 inches larger than the removed damage.

(1) Remove the skin plies to get access to the honeycomb (Ref par. 2.B.). Remove any water with a vacuum or oil-free compressed air.

(2) Sand the adhesive to open the core cells. It is not necessary to remove the adhesive fillets from the core.

(3) Apply a layer of fiberglass cloth or a metal fine mesh screen over the open core.

(4) Put a thermocouple over the center of the core.

(5) Put one ply of fiberglass breather cloth over the screen and thermocouple and hold it in place with a masking tape. Make sure the breather cloth will extend under the vacuum probe.

(6) If you can get access to the side of the honeycomb sandwich panel opposite the damage, apply thermocouples and a heat blanket to that side.

(7) If you cannot get access to the opposite side of the honeycomb sandwich panel or if you use one heat blanket, put the heat blanket over the breather cloth and thermocouple on the damaged side.

(8) Apply the vacuum bag sealing compound around the damage location and seal the location with vacuum bag material. Install the vacuum line over the breather cloth.

(9) Apply a minimum vacuum of 22 inches of mercury to the repair location.

(10) Apply heat to the repair location with the heat blanket or oven for a a minimum of 8 hours at 170°F (77°C) to 190°F (88°C) to remove all of the water. The rate of temperature increase must not be more than 5°F (3°C) for each minute.

2. C. (11) Remove the vacuum bag, heat blanket, thermocouple, breather cloth, and screen from the repair location.

CAUTION: THE WATER THAT NORMALLY IS ABSORBED INTO THE PART MUST BE REMOVED BEFORE AN ELEVATED TEMPERATURE REPAIR IS MADE. THE REPAIR AND PART CAN BE DAMAGED IF THE WATER IS NOT REMOVED.

D. Remove Water from Solid Laminate Structure

NOTE: The area to be dried must be at least 4 inches larger than the removed damage.

(1) Remove the damage and/or delaminated skin. Remove any water with a vacuum or oil-free compressed air.

(2) Put a thermocouple over the center of the repair.

(3) Put one ply of fiberglass breather cloth over the area to be dried and hold it in place with masking tape.

(4) Apply the vacuum bag sealing compound around the damage location and seal the location with vacuum bag material. Install the vacuum line over the breather cloth.

(5) Apply a minimum vacuum of 22 inches of mercury to the repair location.

(6) Apply heat to the repair location with the heat blanket or oven for a minimum of 8 hours at 170°F (77°C) to 190°F (88°C) to remove all of the water. The rate of temperature increase must not be more than 5°F (3°C) for each minute.

E. Prepare the damage location for repair (Fig. 6)

CAUTION: WHEN YOU SAND THE PLY LAYERS, USE CARE NOT TO DAMAGE THE FIBERS OF ANY PLY IN A STEP SAND OR IN THE PLY BONDED TO THE CORE (FIG. 6). DO NOT USE CHEMICAL PAINT REMOVERS TO REMOVE THE FINISH. DAMAGE TO THE ADHESIVE AND PREPREG. RESINS WILL OCCUR. FAILURE TO OBEY WILL CAUSE LOSS OF STRUCTURAL STRENGTH OF THE COMPONENT.

(1) Find the number of plies that have been cut or sanded. Apply masking tape to the area around the damaged area. Make sure you have a minimum of 0.5 inch overlap around each ply.

NOTE: If the number of plies is not apparent, refer to he applicable structure identification or engineering drawing. Ply edge locations can be found if you wipe the sanded edges with methyl ethyl ketone (MEK).

2. E. WARNING: WHEN YOU SAND THE PLY LAYERS, A FINE DUST IS MADE THAT CAN CAUSE SKIN AND EYE IRRITATION AND RESPIRATORY PROBLEMS. DO NOT BREATHE THE DUST BECAUSE IT CAN BE HARMFUL. USE SKIN, EYE, AND RESPIRATORY PROTECTION.

USE AIR-POWERED EQUIPMENT WHERE THERE IS THE POSSIBILITY OF VAPOR IGNITION.

(2) Prepare the inner surfaces (bag side) and noncritical aerodynamic surfaces.

(a) Use No. 240 or finer Scotch-Brite (preferred) abrasive or No. 150 or finer abrasive paper to remove the finish or the Tedlar film in the masked area.

(b) Taper or step sand each ply and make the surface slightly rough. Use No. 180 abrasive paper. The total repair area is equal to the damage area plus 0.5-inch minimum for each ply removed. For taper sanding use a 50 to 1 ratio (Fig. 6).

(c) As an option for two-ply laminate face sheets, you may fill the damage cleanup area even with the initial surface with filler plies during the repair layup. The repair plies are then installed over the smooth surface of the repair area.

NOTE: Do not taper or step sand the repair for this type of repair.

(d) Make the surfaces rough around the repair with No. 180 abrasive paper.

(3) Prepare the aerodynamic surfaces (tool side).

(a) Sand the damage cleanup to a constant straight taper with No. 180 or finer abrasive paper. Use a taper ratio of 50 to 1 (Fig. 6).

NOTE: Use a flexible disk sander, belt sander, rotating pad sander, sand by hand, or equivalent milling equipment.

(b) Remove the outer finishes and any conductive coating from around the repair surfaces with No. 180 or finer Scotch-Brite (preferred) or abrasive paper.

(4) Prepare the edgeband of the panel.

(a) Sand the panel edgeband to a straight taper as described in par. 2.E.(3).

NOTE: The edgeband is the solid laminate around the outside edges of the honeycomb panel.

(5) Clean the repair area.

WARNING: KEEP SOLVENTS AWAY FROM SOURCES OF HEAT, FIRE, OR SPARKS. HEAT, FIRE OR SPARKS CAN CAUSE AN EXPLOSION. DO NOT LET THE SOLVENT GET IN YOUR EYES, ON YOUR SKIN OR ON YOUR CLOTHING. USE EYE PROTECTION AND USE MECHANICAL VENTILATION OR RESPIRATORY EQUIPMENT WHEN YOU WORK IN A CLOSED LOCATION.

CAUTION: DO NOT SOAK THE PARTS IN SOLVENT OR LET THE SOLVENT STAY ON THE PARTS MORE THAN THE LIMITS GIVEN IN PAR. 2.G.(1). DAMAGE TO THE PART WILL OCCUR.

(a) Remove the abrasive dust from the honeycomb panel with a vacuum cleaner.

(b) Clean the surfaces of the repair area with a cloth made moist with methyl isobutyl ketone (MIBK), methyl ethyl ketone (MEK), or acetone. Clean the surface repeatedly until a new moist cloth is clean after use. Remove the solvent before it can dry, then remove the remaining film before you continue with the repair.

F. Make the honeycomb core repair plug.

(1) Refer to the component structural identification section to find the type of honeycomb core specified on the engineering drawing.

(2) Cut the honeycomb core repair plug to the depth necessary to be smooth with the initial core that was removed [par. 2.B.(2)]. Cut the honeycomb core repair plug the same perimeter dimension as the removed core. The core repair plug is to have a tight interference fit after it is wrapped with the foaming adhesive. With a small core repair plug up to 0.50 of an inch can be removed to allow the core to be put into the panel without damage.

NOTE: Add a sanding allowance to the core height as needed. If the repair is to 2 or 3 ply bagside as shown in par. 2.E.(2)(c), make the honeycomb core repair plug smooth with the top initial ply.

G. Clean the honeycomb core repair plug.

WARNING: DO NOT BREATHE THE VAPORS OR LET THE SOLVENT TOUCH YOUR SKIN OR EYES. USE NEOPRENE GLOVES WITH COTTON LINERS, PROTECTIVE CLOTHING, AND EYE GOGGLES. IF THE CHEMICAL TOUCHES YOUR SKIN, CLEAN YOUR SKIN WITH WATER. IF THE CHEMICAL SHOULD GET IN YOUR EYES, FLUSH THEM WITH LARGE QUANTITIES OF WATER AND GET MEDICAL HELP. MAKE SURE THERE IS A GOOD FLOW OF AIR WHERE YOU DO THE WORK OR USE RESPIRATORY EQUIPMENT WHEN YOU WORK IN A CLOSED PLACE. FAILURE TO OBEY CAN CAUSE INJURIES.

CAUTION: DO NOT SOAK THE PARTS IN TRICHLOROETHANE SOLVENT OR LET THE SOLVENT STAY ON THE PARTS MORE THAN THE LIMITS GIVEN IN PAR. 2.G.(1). DAMAGE TO THE PART WILL OCCUR.

(1) Put the honeycomb core into an alcohol, MIBK, MEK, or acetone bath for no longer than 60 seconds.

(2) Remove the solvent and dry the core. Blow dry with clean air or wipe with clean cloth. Remove all remaining film from all sides of the core.

H. Install the honeycomb core repair plug.

CAUTION: DO NOT TOUCH THE ADHESIVE FILM, FOAMING ADHESIVE, OR PREIMPREGNATED (PREPREG) MATERIALS WITH BARE HANDS OR OTHER PARTS OF THE BODY. USE CLEAN, WHITE COTTON GLOVES WHEN YOU TOUCH THESE MATERIALS. THESE MATERIALS MUST BE FREE OF CONTAMINATION WHEN CUT AND HANDLED. DO NOT FOLD, PULL, OR MAKE THE ADHESIVE FILM THIN. MAKE SURE THAT YOU REMOVE THE SEPARATOR FILMS FROM THE ADHESIVES AND PREIMPREGNATED (PREPREG) MATERIALS BEFORE INSTALLATION. FAILURE TO OBEY WILL CAUSE AN UNSATISFACTORY REPAIR.

NOTE: Before you open the adhesive film, foaming adhesive, or preimpregnated (prepreg) material containers, let them stand at room temperature until no more condensation forms on the container.

When you use the adhesive rolls or prepreg materials, make sure that they do not touch each other or other objects.

As an option, the core repair plug and the repair plies may be cured at the same time. You must monitor the temperature carefully with thermocouples put on the outer surfaces of the panel.

The steps that follow are for a core repair plug cured without the repair ply layup.

(1) To install a core repair plug which is less than the full thickness of the initial honeycomb core, do the steps which follow:

(a) Cut two plies of BMS 5-129, Type 2, Grade 10, or BMS 5-101, Type II, Grade 10 adhesive film to fit the core cavity.

(b) Cut one ply of BMS 8-79, Type 120 glass fabric to fit the core cutout.

(c) Remove the separator film from one ply of adhesive film and place the adhesive film into the core cutout.

(d) Remove the separator film from the glass fabric and place the glass fabric into the core cutout.

(e) Remove the separator film from the second ply of adhesive film and put the adhesive film into the core cutout.

(2) To install a core repair plug which is equal to the full thickness of the initial core, do the steps which follow:

(a) Cut one ply of BMS 5-129, Type 2, Grade 10, or BMS 5-101, Type II, Grade 10 adhesive film to the same dimension as the core cutout.

NOTE: Two plies of Grade 5 can be used for one ply of Grade 10.

(b) Remove the separator film from the ply of adhesive film and put the adhesive film into the core cutout.

(3) If both the bag side and tool side of the part are damaged, then use a caul plate on the bag side of the part. Clamp or use tape to hold caul plate in position.

(4) If you cure the core repair plug without the repair ply layup, put the thermocouples at the adhesive bond lines.

(5) Cut a piece of BMS 5-90, Type III or IV, Class 250, Grade 50 foaming adhesive, remove the separator film, and wrap it around the core repair plug.

(6) Wrap the core repair plug and adhesive with a non-stick flexible strip.

(7) Align the ribbon direction of the core repair plug with that of the initial core. Carefully compress the repair core and put it into the core cutout.

NOTE: The core repair plug is to have a tight interference fit in the core cutout after it is wrapped with the foaming adhesive.

(8) Remove the non-stick flexible strip.

(9) Install the vacuum bag system and equipment (Fig. 11).

(a) If the damage goes through both sides of the part, then use a vacuum bag on both sides of the part or put the part in a vacuum bag (Fig. 7).

(b) If the core repair plug is less than or equal to 0.5-inch thick, use a heat blanket on the near side and put a minimum of three thermocouples on the opposite surface at the core to core bondline.

2. H. (9) (c) If the core repair plug is more than 0.5-inch thick, and you can get access to both sides of the panel, use heat blankets on both sides. Put a minimum of four thermocouples on the near side at the bondline and four thermocouples on the opposite side at the bondline of the repair.

NOTE: You may use one heat blanket, but the opposite side must be insulated and thermocouples must be put under the insulation. The controlling thermocouples are to be over the heat blanket to prevent overheating the repair.

(d) Put a layer of perforated FEP parting film over the repair.

(e) Put a layer of dry peel ply or Style 120 glass fabric cloth (or equivalent thickness glass fabric cloth) over the perforated FEP. Use this ply as a surface bleeder cloth.

NOTE: Cut the bleeder cloth large enough to touch the breather cloth which will be applied in par. 2.H.(9)(g).

(f) Put a layer of solid (nonperforated) FEP to the same dimension as the perforated FEP.

(g) Put one ply of fiberglass breather cloth over the repair area.

(h) Apply the vacuum bag sealing compound around the damage location and seal the location with vacuum bag material. Install the vacuum line over the breather cloth.

(i) Apply a minimum vacuum of 22 inches of mercury to the repair. Make a leak check of the vacuum system [refer to Par. 2.M.(13)]. Keep the vacuum at 22 inches of mercury, minimum, until the repair is cured.

I. Cure the core repair.

(1) Increase the temperature of the heat blanket at a rate between 2°F and 5°F (1°C and 3°C) for each minute to a temperature between 225°F and 250°F (107°C and 121°C).

(2) Cure the repair between 225°F and 250°F (107°C and 121°C) for 90 to 120 minutes. All thermocouples must be within the cure temperature range.

NOTE: Cure time does not include the time necessary for the layup and the part to get to the cure temperature. Cure time is the time after the part gets to the cure temperature. All of the thermocouples must be in the cure temperature range before the cure time starts.

2. I. (3) Decrease the temperature at a rate of 5°F (3°C) maximum for each minute.

(4) When the temperature decreases to less than 125°F (52°C), release the vacuum pressure and remove the layup and vacuum bag equipment.

J. Sand the repair core plug approximately smooth with the initial honeycomb core or the surface of the skin. Make an allowance for the adhesive film and slight core crush during the repair ply cure.

K. Remove all of the dust with a vacuum cleaner.

L. To make the repair plies, do the steps that follow:

CAUTION: DO NOT TOUCH THE ADHESIVE FILM OR PREIMPREGNATED MATERIALS WITH BARE HANDS OR OTHER PARTS OF THE BODY. USE CLEAN, LINT-FREE PROTECTIVE GLOVES WHEN YOU TOUCH THESE MATERIALS. THESE MATERIALS MUST BE FREE OF CONTAMINATION WHEN CUT AND TOUCHED. DO NOT FOLD, PULL, OR MAKE THE ADHESIVE FILM THIN. MAKE SURE THAT YOU REMOVE THE SEPARATOR FILMS FROM THE ADHESIVES AND PREPREG MATERIALS BEFORE INSTALLATION. FAILURE TO OBEY WILL CASE AN UNSATISFACTORY REPAIR.

NOTE: Before you open the adhesive film, foaming adhesive, or prepreg material containes, let them stay at room temperature until no more condensation forms on the container.

(1) Fill all fastener holes that will be covered by the repair plies with a resin and chopped fiber mix as shown in Repair 8.

NOTE: Repair all damaged holes as shown in Fig. 18 or 19.

As an option, you can fill the fastener holes that will be covered by the repair plies with Teflon plugs. The plugs will be removed after the repair is cured.

(2) Use one repair ply of fabric for each damaged ply of the panel plus one more ply which will be the largest and outermost ply.

(a) Refer to the component structure identification section to find the material and the number of plies in the initial panel.

(b) Refer to Fig. 3 for repair ply material and alternative repair ply material.

(c) Refer to 51-40-9, Fig. 1, Table I to find if more plies are necessary. If no more plies are required, then add one ply of BMS 8-79, Type 120 or Type 1581 glass fabric cloth.

(3) When you make a tapered repair, use one filler ply over the exposed core.

2. L. (4) See Fig. 6 for the necessary overlap.

(5) Find the correct ply orientation.

(a) Each repair ply must have the same orientation as the ply it replaces.

(b) The orientation of the outermost repair ply must be the same as the surface ply immediately below it.

(c) If you use a filler ply, the orientation is optional.

NOTE: Filler plies are plies that are used to fill low spots in the repair area. They can cover a small or large portion of a repair ply to smooth the repair. These plies are nonstructural.

(6) Install the repair plies.

CAUTION: MAKE SURE THAT YOU REMOVE THE SEPARATOR FILMS FROM THE ADHESIVE FILM AND THE PREPREG MATERIALS BEFORE YOU LAYUP AND CURE THE REPAIR. FAILURE TO OBEY WILL CAUSE AN UNSATISFACTORY REPAIR.

NOTE: If the damage is located at a lap joint in the initial structure, it is not necessary to make an equivalent lap joint in the repair plies. If the initial core at the lap joint is not damaged and there is a recess, fill the recess with filler plies before you layup the repair plies.

(a) Make a temporary vacuum bag system (Fig. 9).

NOTE: This vacuum bag is for compacting the repair plies and to prevent contamination of the repair. Do not use this vacuum bag system for the repair cure.

1) Put a layer of perforated FEP parting film over the repair.

2) Put one layer of fiberglass cloth as a surface breather over the repair.

3) Apply the vacuum bag sealing compound around the repair area.

4) Put the vacuum bag material over the repair area. Seal the edges with the vacuum bag sealing compound.

5) Attach a vacuum line at the edge of the surface breather.

(b) Cut out the repair plies. Make the repair plies same shape as the ply it replaces. Make the repair plies larger to get the required overlap.

(c) Cut one or two plies of BMS 5-129, Type 2, Grade 10, or BMS 5-101, Type II, Grade 10 adhesive film 1/8 inch more all around than the outermost repair ply.

NOTE: A preferred option is to use a ply of BMS 8-79, Type 1581 or Type 120 prepreg fiberglass cloth cut to the same size as the adhesive. It is the nonstructural sanding ply. This nonstructural sanding ply is the outermost ply and covers all of the repair. After it has cured, this ply can be sanded as necessary to get a smooth surface. Do not sand into the structural repair plies below it.

(d) Remove the separator film from one ply of adhesive film and put the adhesive film over the repair area.

(e) Place the repair plies.

NOTE: Add the filler plies as necessary to get a smooth repair.

1) Start with the smallest repair ply and remove the separator film. Do this for each repair ply that follows:

2) Make sure the orientation of each repair ply you put in the repair is correct and that the overlap is correct.

3) Compact each ply with the temporary vacuum bag system for 3 minutes. Apply a vacuum of 22 inches of mercury minimum.

(f) Remove the separator film from the top ply of adhesive film or prepreg fiberglass cloth and put it over the repair plies.

M. Assemble the vacuum bag system (Fig. 10).

(1) Put a layer of perforated parting film over the repair. Cut the parting film so that the edges are 1 inch more all around than the edges of the outermost ply.

(2) Put the thermocouples equally spaced around the edge of the repair. The thermocouples must touch the edges of the outermost ply. Connect the thermocouples to the applicable recorder. If the repair is over solid laminate and honeycomb core, you must put thermocouples over both areas.

2. M. (3) Put a layer of dry peel ply or Style 120 glass fabric cloth (or equivalent thickness glass fabric cloth) over the perforated parting film. Use this ply as a surface bleeder cloth.

NOTE: Cut the bleeder cloth large enough to touch the breather cloth which will be applied in par. 2.M.(5).

(4) Put a layer of solid (nonperforated) parting film to the same dimension as the perforated parting film.

(5) Put one layer of fiberglass cloth as a surface breather over the repair. Cut the breather cloth larger than the parting film so that it will touch the bleeder cloth. Also make sure that the breather cloth is larger than the heat blanket and the caul plate if you use them.

(6) Put the heat blanket on the layup, if you use it as the heat source. The heat blanket must be a minimum of 2.0 inches more all around than the parting film.

NOTE: When you use one or more heat blankets or a heat blanket more than 12.0 inches on a side, use an aluminum caul plate (1100-0 alloy, 0.020 to 0.060 inch thick is recommended) to even out the temperature.

Make the caul plate the same dimension as the heat blanket and put it under the heat blanket.

Do not use a caul plate on repairs with a complex contour.

(7) Put the controlling thermocouples over and around the center of the heat blanket. Use a minimum of three thermocouples. If you do not use a caul plate, put thin (0.016 to 0.040 inch thick) aluminum strips, 1.0 inch in width under the thermocouple wires.

NOTE: Failure to put the aluminum strips under the thermocouple wires will cause the wires to put marks in the repair surface. Only the thermocouple junction is to touch the aluminum strips. Do not let bare wires touch the aluminum strips.

(8) Put four to six layers of fiberglass cloth as insulation over the repair. Make sure that the insulation cloth is larger than the heat blanket.

(9) Apply the vacuum bag sealing compound around the repair area.

2. M. CAUTION: DO NOT FULLY BAG HOLLOW COMPOSITE COMPONENTS LIKE RUDDERS, ELEVATORS, AND AILERONS. THEY MAY BE DAMAGED WHEN YOU APPLY THE VACUUM. ATTACH THE VACUUM BAG TO ONE SIDE OF THE COMPONENT ONLY OR ATTACH DIFFERENT VACUUM BAGS TO EACH SIDE TO MAKE SURE THAT NO VACUUM IS MADE INSIDE THE HOLLOW COMPONENT DURING THE REPAIR. COMPONENTS WHICH CONSIST OF A SINGLE PANEL MADE OF FULL DEPTH HONEYCOMB CORE WITH LAMINATE FACE SHEETS AND EDGEBANDS MAY BE FULLY BAGGED (FIG. 7).

(10) Put the vacuum bag material over the repair area. Seal the edges with the vacuum bagging sealing compound. Put pads on all sharp objects and corners under the bag. It is optional to use a vacuum bag over all of the part (Fig. 7).

(11) Attach a vacuum line over the edge of the surface breather. Use more than one vacuum line for large repairs.

(12) Apply a vacuum of 22 inches of mercury minimum in the vacuum bag during the cure cycle.

(13) Examine the vacuum bag for leaks.

NOTE: A vacuum bag which leaks can cause porosity in the repair and bond failure.

(a) Apply a vacuum of 22 inches of mercury minimum.

(b) Remove the vacuum source.

(c) Monitor the vacuum gauge. After 5 minutes, the total decrease of vacuum must be less than 5 inches of mercury.

N. Cure the repair (Fig. 4).

WARNING: USE HEAT CURE EQUIPMENT THAT IS PERMITTED BY THE LOCAL FIRE PROTECTION AUTHORITIES. FAILURE TO OBEY COULD CAUSE INJURY TO PERSONS.

CAUTION: DO NOT LET THE SURFACE TEMPERATURES BE MORE THAN 270°F (132°C). DAMAGE OR DISTORTION OF THE STRUCTURE CAN OCCUR.

NOTE: When you use a hot bond console, read and obey the manufacturer's operation instructions. Keep a vacuum of 22 inches of mercury minimum during the full cure cycle.

(1) Autoclave or oven cure.

NOTE: Use three or more thermocouples for monitoring the cure. Monitor temperature of the supporting tool as well as the part.

(a) Support the part to prevent the part from distorting.

2. N. (1) (b) If an autoclave is used, do the following:

1) Pressurize the autoclave to 45 pounds per square inch.

2) Vent the vacuum bag to the atmosphere when the pressure is 15 pounds per square inch.

3) Keep the vacuum bag vented and the autoclave pressurized until after the cure is complete and the part has cooled to below 125°F (52°C).

(c) Increase the temperature of the autoclave or oven at a rate between 2°F and 5°F (1°C and 3°C) for each minute to a temperature between 250°F and 270°F (121°C and 132°C).

(d) Hold the autoclave or oven between 250°F and 270°F (121°C and 132°C) for 90 to 120 minutes.

(e) Decrease the autoclave or oven temperature at a rate of 5°F (3°C) maximum for each minute.

(f) When the temperature is less than 125°F (52°C), release the vacuum or autoclave pressure and remove the layup and vacuum bag equipment.

(2) If a heat blanket is used to cure the repair, do the following:

(a) Increase the temperature of the heat blanket at a rate between 2°F and 5°F (1°C and 3°C) for each minute to a temperature between 250°F and 270°F (121°C and 132°C). Switch control of the heat blanket to the thermocouple with the highest reading.

(b) Place insulation over or on the opposite side of the cooler areas to keep all areas of the repair at the required temperature. Solid laminate areas of a part are usually cooler.

CAUTION: HIGH TEMPERATURES CAN MAKE ALUMINUM ALLOYS LOSE THEIR STRENGTH.

(c) If the part to be repaired is near or attached to metal, do the following:

1) Make sure that the area to be heated is free of clamping forces.

2) Remove or thermally isolate aluminum from the area to be heated. Do not allow aluminum to be heated above 180°F (82°C).

2. N. (2) (c) 3) All other metal can be insulated to prevent cold spots in the repair.

4) If insulating will not bring all thermocouples up to cure temperature, a heat gun can be used to heat local areas. Add thermocouples as necessary to monitor the temperature.

(d) Cure the repair between 250°F and 270°F (121°C and 132°C) for 120 to 150 minutes.

NOTE: Cure time does not include the time necessary for the layup and the part to get to the cure temperature. Cure time is the time after the part gets to the cure temperature. All of the thermocouples must be in the cure temperature range before the cure time starts. If a thermocouple reading drops below the cure temperature during the cure, extend the cure cycle time by the time it was required to get the thermocouple back into the cure temperature.

(e) Decrease the temperature at a rate of 5°F (3°C) maximum for each minute.

(f) When the temperature is less than 125°F (52°C), release the vacuum pressure and remove the layup and vacuum bag equipment.

O. Examine the repair.

(1) Examine the repair for voids or flaws in the bond. Use instrument nondestructive inspection (NDT) procedures. Examine the area that includes a band 4 inches minimum all around the heated area. If the part was autoclave or oven cured, inspect the complete part. If the repair is defective, remove it and repair the defective area again.

NOTE: For NDT procedures, refer to the 737 Nondestructive Test Manual D6-37239.

(2) If instrumented NDT test procedures are not available, the tap test procedure may be used for an interim inspection of the repair. Use a solid metal disk and tap the repair area with the edge of the disk. Areas with voids will make a dull sound. A solid bond will make a sharp rap.

NOTE: The tap test procedure is only used as an interim inspection of the repair. Instrumented nondestructive test procedures must be used at the next "A" check to make sure that the repair is satisfactory.

2. O. (3) Refer to the specific component allowable damage section for the defect limits.

(a) The maximum disbond, void or delamination dimension in the repair area is the maximum delamination dimension listed in the allowable damage section.

(b) Porosity of more than 15% by X-ray inspection or with a signal loss of more than 10db by ultrasonic is not allowed.

P. Apply the finish to the repair.

CAUTION: DO NOT SAND INTO THE INITIAL STRUCTURAL FIBERS. FAILURE TO OBEY WILL DECREASE THE STRENGTH OF THE COMPONENT.

(1) Sand the outermost ply as necessary to make the edges smooth with the initial surface. Do not sand through the nonstructural sanding ply and into the repair plies below it.

(2) To apply the finish to the repair area, use the applicable steps that follow.

(a) If clear Tedlar film surfaces were removed, seal them with Resin System 1 and cure (Fig. 2).

(b) If gray or white Tedlar film surfaces were removed, seal them with Resin System 1 and cure (Fig. 2). Apply one layer of BMS 10-11 or BMS 10-103 primer and then one layer of BMS 10-60 enamel.

(c) If BMS 10-21 conductive coating was removed, apply it again as given in 51-21-71 of the 737 Maintenance Manual.

(d) If the abrasion resistant Teflon finish was removed from the inner surface of the panel edgeband, apply the Teflon again as given in 51-21-81 of the 737 Maintenance Manual.

(e) If the initial painted surfaces were removed, paint them again as given in 51-21 of the 737 Maintenance Manual.

(f) If sealant was removed from around fittings or fay surfaces, apply BMS 5-26 sealant in the fuel cell and BMS 5-95 to all other areas as given in 51-20-4.

(g) If aluminum flame spray areas were damaged, refer to 51-40-9.

(h) If BMS 8-278 aluminum coated glass fabric was repaired, apply aluminum flame spray as given in 51-40-9.

WARNING: FLIGHT CONTROL SURFACES MUST BE CORRECTLY BALANCED AFTER THEY ARE REPAIRED. FAILURE TO DO SO CAN CAUSE FLUTTER AND A STRUCTURAL FAILURE.

Q. After you repair a flight control surface, do a check to find if it must be rebalanced. Refer to 51-80.

CAUTION: REPAIRS MADE TO CONTROL SURFACES AND/OR ADJACENT STRUCTURE MUST NOT TOUCH EACH OTHER OR STOP THE OPERATION OF THE FLIGHT CONTROL SURFACES. DAMAGE TO THE AIRPLANE STRUCTURE MAY OCCUR.

R. Do a check of the operation of the flight control surfaces. Make sure that the flight control surfaces do not hit the airplane structure and that there is enough clearance for the repaired parts.

S. Redrill and countersink any fastener holes that were filled.

CAUTION: REPAIRS MUST NOT CAUSE A BLOCKAGE OF ANY DRAIN HOLES IN THE PANELS. BLOCKED DRAIN HOLES CAN CAUSE WATER TO COLLECT INSIDE THE STRUCTURE.

T. If the repair causes a blockage of a drain hole, drill through the repair at the drain hole position. Use a 0.375-inch diameter drill (Ref 51-41 - 737 Maintenance Manual).

3. Typical Repairs

NOTE: These repair procedures are applicable to all glass fabric reinforced laminates and nonmetallic honeycomb sandwich components but are not applicable to radomes and floor panels. Refer to 53-50-04 for radomes and 53-20-02 for floor panels.

A. Repair 1 - Repair the Damage to One Skin of the Honeycomb Panel (Fig. 12).

(1) Find the limits of the damage (par. 2.A.).

(2) Remove the damaged plies as given in par. 2.B. Do not remove any core. Make sure that you remove water or other unwanted material as given in par. 2.C.

(3) Prepare the damaged area as given in par. 2.E.

(4) Prepare and apply the fabric repair plies as given in par. 2.L.

(5) Install the vacuum bag system as given in par. 2.M.

(6) Cure the repair as given in par. 2.N.

(7) Examine the completed repair as given in par. 2.O.

(8) Apply the finish to the repair area as given in par. 2.P.

3. B. Repair 2 - Repair the Damage, More than 0.50-Inch Diameter to One Skin and Honeycomb Core (Fig. 13).

(1) Find the limits of the damage (par. 2.A.).

(2) Remove the damage as given in par. 2.B.(1). Make sure that you remove water or other unwanted material as given in par. 2.C. The damaged area must be fully dry.

(3) Prepare the damaged area as given in par. 2.E.

(4) Make, clean, and install the honeycomb core repair plug as given in par. 2.F., 2.G., and 2.H.

(5) Cure the honeycomb core repair plug as given in par. 2.I., 2.J., and 2.K.

(6) Clean the repair surface as given in par. 2.E.(5).

(7) Prepare and apply the repair plies as given in par. 2.L.

(8) Install the vacuum bag system as given in par. 2.M.

(9) Cure the repair as given in par. 2.N.

(10) Examine the completed repair as given in par. 2.O.

(11) Apply the finish to the repair area as given in par. 2.P.

C. Repair 3 - Repair the Damage to Both Skins and Honeycomb Core (Fig. 14).

NOTE: The two-stage cure procedure which follows is recommended. As an option, you may use a three-stage cure procedure if the core plug installation and the repair plies on each side are prepared independently.

(1) Find the limits of the damage (par. 2.A.).

(2) Remove the damage as given in par. 2.B.

(3) Prepare the damaged area as given in par. 2.E.

(4) Make, clean, and install the honeycomb core repair plug as given in par. 2.F., 2.G., and 2.H. It is not necessary to use a vacuum bag procedure at this time.

(5) Prepare and apply the repair plies to one surface of the panel as given in par. 2.F. Use a caul plate on the opposite side of the panel to keep the core plug in position.

3. C. (6) Install the vacuum bag system as given in par. 2.M.

(7) Cure the repair as given in par. 2.N. Make sure the temperature meets the cure requirement on both sides of the panel.

(8) Sand the core plug smooth with the initial surface. Make an allowance for slight core crush during the cure procedure.

(9) Clean the repair surface as given in par. 2.E.(5).

(10) Prepare and apply the repair plies to the outer surface of the panel as given in par. 2.L.

(11) Install the vacuum bag system as given in par. 2.M.

(12) Cure the repair as given in par. 2.N. Make sure the temperature is approximately equal on both sides of the panel.

(13) Examine the completed repair as given in par. 2.O.

(14) Apply the finish to the repair area as given in par. 2.P.

D. Repair 4 - Repair the Damage to the Honeycomb Panel when Access is Limited to One Side (Fig 15).

NOTE: This repair is applicable to flat or almost flat panels where the damage goes fully through the panel but access is not available to repair the opposite side.

(1) Find the limits of the damage (par. 2.A.).

(2) Remove the damage as given in par. 2.B. and the steps that follow.

(a) Make the hole in the outer skin and core larger than the damaged area. The larger hole will let you repair the inner skin with the necessary overlap.

NOTE: D diameter = d + N + 1
d = larger diameter of the oval hole in the inner skin
N = number of plies in the inner skin
Do not step the plies in the inner skin for this repair

(b) Cut the damaged area in the inner skin to an oval shape.

NOTE: The larger diameter of the oval hole must be sufficiently large for the smaller diameter oval patch to go through.

(3) Make sure that you remove water or other unwanted material as given in par. 2.C. The damage area must be fully dry.

3. D. (4) Make an airtight patch to put a cover over the oval hole on the inner side.

(a) Use a thin gauge aluminum sheet or any smooth surface as a mold on which to lay up the patch.

(b) Put a cover over the mold with parting film or a release agent.

(c) Cut five plies of BMS 8-79 glass fabric cloth. The type and orientation are optional. Cut the plies equal to at least the D diameter.

CAUTION: MAKE SURE THAT YOU REMOVE THE SEPARATOR FILMS FROM THE PREIMPREGNATED (PREPREG) MATERIALS BEFORE YOU DO THE LAYUP AND CURE PROCEDURES. FAILURE TO OBEY WILL CAUSE AN UNSATISFACTORY REPAIR.

(d) Remove the separator films and lay up the five plies of prepreg material on the mold.

(e) Install the vacuum bag system as given in par. 2.M.

(f) Cure the patch as given in par. 2.N.

(g) Remove the cured patch from the mold.

(h) Cut the patch to an oval shape that will overlap the oval hole in the inner skin by a minimum of 0.25 inch all around.

(i) Drill a 1/8-inch diameter hole through the center of the patch.

(j) Make the surface of the patch rough so that the patch will bond to the inner skin. Use No. 240 or finer abrasive paper.

(k) Remove all of the sanding dust with a vacuum cleaner.

(l) Make a spring steel strip 1.0 inch by 10.0 inches. Drill a 1/8-inch diameter hole through the center of the strip.

(m) Assemble the patch and the spring steel strip with a 1/8-inch diameter temporary fastener.

(5) Remove any Tedlar, if necessary, and make the underside of the inner skin rough 0.5 of an inch all around from the edge of the oval hole.. Use No. 180 or finer abrasive paper. Do not damage the initial ply fibers.

(6) Clean the surface as given in par. 2.E.(5).

(7) Bend up the ends of the spring steel strip and apply the BMS 5-25, Type II, Grade 1 adhesive or BMS 5-92, Type I adhesive to the patch.

(8) Hold the spring steel strip ends up and put the patch through the oval hole. Turn the patch so that it is fully over the hole. Release the spring steel strip so that it holds the patch tight against the inner skin.

(9) Cure the adhesive as shown in Fig. 2.

(10) Remove the temporary fastener and the spring steel strip. Fill the hole in the patch with BMS 5-25, Type II, Grade 1 adhesive, BMS 5-92, Type I adhesive or BMS 5-95, Class B-1/2 sealant and let cure.

NOTE: Cure BMS 5-25 and BMS 5-92 adhesives as shown in Fig. 2. Cure the BMS 5-95 sealant as given in 51-20-4.

(11) Clean the repair area as given in par. 2.E.(5).

(12) Prepare and apply the repair plies to the inner skin as given in par. 2.L.(1). Cut all of the plies to the diameter D.

(13) Cut two plies of BMS 5-129, Type II, Grade 10, or BMS 5-101, Type II, Grade 10 adhesive film 0.10 of an inch larger than the diameter D.

CAUTION: MAKE SURE THAT YOU REMOVE THE SEPARATOR FILMS FROM THE PREIMPREGNATED (PREPREG) MATERIALS BEFORE YOU DO THE LAYUP AND CURE PROCEDURES. FAILURE TO OBEY WILL CAUSE AN UNSATISFACTORY REPAIR.

(14) Do the steps which follow to apply the adhesive film and repair plies.

(a) Remove the separator film from one ply of adhesive film and put the adhesive film on the faying surface of the inner skin.

(b) Remove the separator film from each prepreg repair ply in turn and put the repair plies on the repair area with the correct orientation.

(c) Remove the separator film from the second ply of adhesive film or fiberglass and put the adhesive film over the repair plies.

(15) Make and clean the core repair plug as given in par. 2.F. and 2.G.

(16) Install the core repair plug as given in par. 2.H.

3. D. (17) Clean the repair surface as given in par. 2.E.(5).

(18) Prepare and apply the repair plies to the outer skin as given in par. 2L.

(19) Install the vacuum bag system as given in par. 2.M.

(20) Cure the repair as given in par. 2.N.

(21) Examine the completed repair as described in par. 2.O.

(22) Apply the finish to the repair area as given in par. 2.P.

E. Repair 5 - Repair the Damage to the Plies on the Edge of the Honeycomb Panel (Fig. 16).

(1) Find the limits of the damage (par. 2.A.).

(2) Remove the damaged plies as given in par. 2.B.

(3) Remove all contamination and water from the damaged area as given in par. 2.C. and 2.D. Make sure the repair area is fully dry.

CAUTION: DO NOT SAND INTO THE CORE OR THE ADJACENT BOND PLY (FIG. 14). FAILURE TO OBEY WILL CAUSE LOSS OF STRUCTURAL STRENGTH OF THE COMPONENT.

(4) Prepare the damaged area as given in par. 2.E.

(5) Prepare and apply the fabric repair plies as given in par. 2.L.

(6) Install the vacuum bag system as given in par. 2.M.

(7) Cure the repair as given in par. 2.N.

(8) Examine the completed repair as given in par. 2.O.

(9) Apply the finish to the repair area as given in par. 2.P.

F. Repair 6 - Repair the Damage to the Honeycomb Core on the Edge of the Honeycomb Panel (Fig. 17).

(1) Find the limits of the damage (par. 2.B).

(2) Remove the damaged plies as given in par. 2.B.

(3) Remove all contamination and water from the damaged area as given in par. 2.C. and 2D. Make sure the repair area is fully dry.

(4) Prepare the damaged area as given in par. 2.E.

3. F. (5) Make, clean, and install the core repair plug as given in par. 2.F., 2.G., and 2.H.

(6) Clean the repair surfaces as given in par. 2.E.(5).

(7) Prepare and apply the repair plies as given in par. 2.L.

(8) Install the vacuum bag system as given in par. 2.M.

(9) Cure the repair as given in par. 2.N.

(10) Examine the completed repair as given in par. 2.O.

(11) Apply the finish to the repair area as given in par. 2.P.

G. Repair 7 - Repair the Damaged Panel Attach Hole in the Honeycomb Panel Edgebands or Along the Edges of Solid Laminate Panels (Fig. 18).

(1) Find the limits of the damage (par. 2.A.).

(2) Taper sand around the hole to remove the damage (par. 2.B.).

(3) Remove all contamination and water from the damaged area as given in par. 2.D. Make sure the repair area is fully dry.

(4) Clean the repair surfaces as given in par. 2.E.(5).

(5) Prepare and apply the fabric repair plies as given in par. 2.L.

(6) Install the vacuum bag system as given in par. 2.M.

(7) Cure the repair as given in par. 2.N.

(8) Drill and countersink the fastener holes. Refer to 51-10-7 for hole drilling and machining of composite structure.

(9) Examine the completed repair as given in par. 2.O.

(10) Apply the finish to the repair area as given in par. 2.P.

H. Repair 8 - Repair the Damage, 0.50-Inch Diameter or Less, to Solid Laminates including a fastener hole (Fig. 19).

NOTE: This repair applicable to components made from laminated glass fabric plies and epoxy resin and without honeycomb core.

(1) Find the limits of the damage (par. 2.A.). If you find a delamination, do the repair given in par. 3.I. If you do not find a delamination, continue with this repair procedure.

(2) Remove the damage as given in Fig. 19.

(3) Clean the repair area as given in par. 2.E.(5).

(4) Fill the hole equal to or slightly higher than the initial surface around it with the Resin System 4 or 5 as given in SRM 51-40-12, Repair 10.

(5) Cure the repair as given in SRM 51-40-12, par. 2.G. A vacuum is not necessary for this step.

(6) If fastener holes were filled, then drill and countersink the hole. Refer to SRM 51-10-7 for hole drilling and machining of composite structure.

CAUTION: DO NOT SAND INTO THE FIBERS OF THE INITIAL SURFACE AROUND THE REPAIR.

(7) Make the surface of the repair equal to the initial surface around the repair to within + 0.010 inch with abrasive paper.

NOTE: Use a 0.010-inch thick aluminum template to give protection to the area around the repair when you use abrasive paper.

(8) Make the surface around the repair rough with No. 150 or finer abrasive paper.

(9) Clean the repair area as given in par. 2.E.(5).

(10) Prepare and apply the fabric repair plies as given in par. 2.L.

(11) Install the vacuum bag system as given in par. 2.M.

(12) Cure the repair as given in par. 2.N.

(13) Examine the completed repair as given in par. 2.O.

(14) Apply the finish to the repair area as given in par. 2.P.

I. Repair 9 - Repair the Damage, More than 0.50-Inch Diameter, to Solid Laminates (Fig. 20)

NOTE: This repair is applicable to components made from laminated glass fabric plies and epoxy resin and without honeycomb core.

(1) Find the limits of the damage (par. 2.A.). If you find a delamination, do the repair given in par. 3.I. If you do not find a delamination, continue with this repair procedure.

(2) Remove the damage as given in par. 2.B.

(3) Remove all contamination and water from the damaged area as given in par. 2.C. Make sure the area is fully dry.

(4) Prepare the repair as given in par. 2.E.

(5) Clean the repair area as given in par. 2.E.(5).

(6) Prepare and apply the repair plies as given in par. 2.L.

(7) Install the vacuum bag system as given in par. 2.M.

(8) Cure the repair as given in par. 2.N.

(9) Examine the finish to the repair area as given in par. 2.O.

(10) Apply the finish to the repair area as given in par. 2.P.

J. Repair 10 - Repair the Dents

(1) Find the limits of the damage as given in par. 2.A. If there is fiber damage or delamination, refer to the specific component structural repair section.

(2) If there is no fiber damage or delamination, do the repair as given in SRM 51-40-12, Repair 12.

K. Repair 11 - Repair the Damage, 0.50-Inch Diameter or Less, to One Skin and Honeycomb Core as given in SRM 51-40-12, Repair 2.

L. Repair 12 - Repair the Delamination Between the Plies of the Panel Edgeband as given in SRM 51-40-12, Repair 6.

REPAIR NO.	REPAIR TITLE	PARAGRAPH	FIGURE NO.
1	REPAIR THE DAMAGE TO ONE SKIN OF THE HONEYCOMB PANEL	3.A.	12
2	REPAIR THE DAMAGE, MORE THAN 0.50-INCH DIAMETER, TO ONE SKIN AND HONEYCOMB CORE	3.B.	13
3	REPAIR THE DAMAGE TO BOTH SKINS AND HONEYCOMB CORE	3.C.	14
4	REPAIR THE DAMAGE TO THE HONEYCOMB PANEL WHEN ACCESS IS LIMITED TO ONE SIDE	3.D.	15
5	REPAIR THE DAMAGE TO THE PLIES ON THE EDGE OF THE HONEYCOMB PANEL	3.E.	16
6	REPAIR THE DAMAGE TO THE HONEYCOMB CORE ON THE EDGE OF THE HONEYCOMB PANEL	3.F.	17
7	REPAIR THE DAMAGED PANEL ATTACH HOLE IN THE HONEYCOMB PANEL EDGEBANDS OR ALONG THE EDGES OF SOLID LAMINATE PANELS	3.G.	18
8	REPAIR THE DAMAGE, 0.50-INCH DIAMETER OR LESS, TO SOLID LAMINATES, OR FASTENER HOLE	3.H.	19
9	REPAIR THE DAMAGE, MORE THAN 0.50-INCH DIAMETER, TO SOLID LAMINATES	3.I.	20
10	REPAIR THE DENTS	3.J.	—
11	REPAIR THE DAMAGE, 0.50-INCH DIAMETER OR LESS, TO ONE SKIN AND HONEYCOMB CORE	3.K.	—
12	REPAIR THE DELAMINATION BETWEEN THE PLIES OF THE PANEL EDGEBAND	3.L.	—

Repair Index
Figure 1

RESIN, PREPREG, OR ADHESIVE TYPE	COMPONENTS	PARTS BY WEIGHT	OPEN TIME BEFORE USE, OR POT LIFE OF MIXTURE	CURING TIME
RESIN MIX 1 (SEALER RESIN) (BMS 8-207, TYPE 1, CLASS I)	EC1838A RESIN EC1838B HARDENER	50 50	20 MINUTES AT 75° TO 79°F (24° TO 26°C)	2 HRS AT 105° (41°C) TO 125°F (52°C)
RESIN MIX 1 (SEALER RESIN) ALTERNATIVE (BMS 8-207 TYPE 1, CLASS II)	FR-40 RESIN FR-5413C HARDENER	99 TO 101 14.5 TO 15.5	20 MINUTES AT 75° TO 79°F (24° TO 26°C)	12 HRS MIN AT ROOM TEMP (65°F MIN) (19°C MIN) OR 1 HR MIN AT 150°F (66°C) TO 170°F (77°C)
RESIN MIX 1 (SEALER RESIN) ALTERNATIVE	EPIBOND 156A RESIN EPIBOND 941 HARDENER	98 TO 102 9.5 TO 10.5	45 TO 60 MINUTES AT 70°F (21°C)	SEE FIG. 8
RESIN MIX 1 (SEALER RESIN) ALTERNATIVE	EPIBOND 156A RESIN EPIBOND 156B HARDENER	98 TO 102 5.7 TO 6.3	15 TO 25 MINUTES AT 77°F (25°C)	12 HRS AT 70°F (21°C) OR 1 TO 3 HRS AT 150°F (66°C)
RESIN MIX 1 (SEALER RESIN) ALTERNATIVE	FR-5318S RESIN FR-5318C HARDENER	98 TO 102 49 TO 51	45 TO 60 MINUTES AT 70°F (21°C)	SEE FIG. 8
RESIN MIX 1 EPOX-O WELD (SEALER RESIN) ALTERNATIVE	TWO COMPONENT KIT	DO THE MANUFACTURERS INSTRUCTIONS GIVEN WITH EACH KIT		
			45 TO 60 MINUTES AT 70°F (21°C)	SEE FIG. 8
BMS 5-25, TYPE II, GRADE 1 ADHESIVE	EPIBOND 1539A EPIBOND 1539B-10	113 ±5.6 100 ±5.0	60 MINUTES AT 70°F (21°C) TO 80°F (27°C)	12 HRS MIN AT 65°F (19°C) TO 100°F (38°C). 2 HRS MIN AT 115°F (46°C) TO 135°F (57°C)
BMS 5-92, TYPE I ADHESIVE	EC2216A GRAY EC2216B WHITE	140 100	2 HRS BELOW 100°F (38°C)	24 HRS MIN AT 65°F (19°C) TO 100°F (38°C). 180 ±10 MINUTES AT 110°F (43°C) TO 130°F (54°C)
BMS 5-90, TYPE III, CLASS 250-10-10, GRADE 50	FM 490A, MA 562, PL 685		10 DAYS AT 90°F (32°C)	SEE TEXT
BMS 5-90, TYPE IV, CLASS 250-10-10, GRADE 50	PL 460		10 DAYS AT 90°F (32°C)	SEE TEXT

Resin, Prepreg, and Adhesive Specifications and Mixing Procedures
Figure 2 (Sheet 1)

RESIN, PREPREG, OR ADHESIVE TYPE	COMPONENTS	PARTS BY WEIGHT	OPEN TIME BEFORE USE, OR POT LIFE OF MIXTURE	CURING TIME
BMS 5-101, TYPE II, GRADE 10	AF-163-2K, OR AF-163-2M, OR AF-163-2OST, OR AF-163-3M		10 DAYS AT 65°F (19°C) TO 90°F (32°C)	SEE TEXT
BMS 5-129, TYPE 2, CLASS IA, GRADE 10	AF-126		5 DAYS AT 65°F (19°C) TO 80°F (27°C)	SEE TEXT
BMS 5-129, TYPE 2, CLASS IIA, GRADE 10	AF-126-2		5 DAYS AT 65°F (19°C) TO 80°F (27°C)	SEE TEXT
BMS 5-129, TYPE 2, CLASS IIB, GRADE 10	FM-123-2		5 DAYS AT 65°F (19°C) TO 80°F (27°C)	SEE TEXT
BMS 5-129, TYPE 2 CLASS IIC, GRADE 10	FM-123-5		5 DAYS AT 65°F (19°C) TO 80°F (27°C)	SEE TEXT
BMS 8-79 (GLASS PREPREG) CLASS III, GRADE 1			A	SEE TEXT
TYPE 120	120-F155-5-F69 NARMCO-3203F-120,Z6040 120-F155-5-CS272 G120/F6986S03-S920NM			
TYPE 1581	1581-F155-5-F69 NARMCO-3203F-1581,Z6040 1581-F155-5-CS272 G1581-F6986S03-S920NM			
TYPE 7781	7781-F155-5-F69 NARMCO-3203F-7781,Z6040 7781-F155-5-CS272 G7781-F6986S03-S920NM			

Resin, Prepreg, and Adhesive Specifications and Mixing Procedures
Figure 2 (Sheet 2)

RESIN, PREPREG, OR ADHESIVE TYPE	COMPONENTS	PARTS BY WEIGHT	OPEN TIME BEFORE USE, OR POT LIFE OF MIXTURE	CURING TIME
BMS 8-289 (ALUMINUM FOIL) TYPE O/250 FORM 2	CYCOM AEL-200-1/1100 ADH. WT. 0.025 ±0.01 LB/FT^2		10 DAYS AT 10°F (-12°C) TO 95°F (35°C)	SEE TEXT
	C-CLAD H-250-025 ADH. WT. 0.025 ±0.01 LB/FT^2			
FORM 2	C-CLAD H-250/350-002 ADH. WT. 0.002 ±0.0015 LB/FT^2			

Resin, Prepreg, and Adhesive Specifications and Mixing Procedures
Figure 2 (Sheet 3)

WARNING: THESE MATERIALS CONTAIN TOXIC CHEMICALS. MAKE SURE THERE IS SUFFICIENT VENTILATION. DO NOT LET THE UNCURED RESINS OR CURE AGENT TOUCH YOUR SKIN OR GET IN YOUR EYES. WEAR RUBBER GLOVES WITH COTTON LINERS AND USE EYE PROTECTION. IF THE UNCURED RESINS OR THE CURE AGENT GET ON YOUR SKIN WASH WITH WARM WATER AND SOAP. DO NOT USE SOLVENTS TO CLEAN YOUR SKIN. IF THE UNCURED RESIN OR CURE AGENT GETS IN YOU EYES, FLUSH WITH WATER AND GET MEDICAL HELP.

CAUTION: DO NOT USE WAX CONTAINERS TO MIX THE RESIN AND CURE AGENT. FAILURE TO OBEY WILL CAUSE CONTAMINATION OF THE RESIN.

	PROCEDURES TO PREPARE THE RESIN MIX AND THE ADHESIVE
RESIN MIX 1 BMS 5-25, BMS 5-92	ADD THE CURE AGENT TO THE RESIN AND MIX FULLY.
BMS 5-90, BMS 5-129	REMOVE THE SEPARATOR FILM BEFORE YOU USE THE ADHESIVE FILM.

NOTES

- REFER TO 51-20-3 FOR THE MATERIAL SOURCES.

[A] THE OUT-TIME FOR THIS MATERIAL IS 200 EXPOSURE UNITS. ONE EXPOSURE UNIT IS ADDED FOR EACH HOUR THE MATERIAL IS AT TEMPERATURES BETWEEN 10°F (-12°C) AND 80°F (27°C). THREE EXPOSURE UNITS ARE ADDED FOR EACH HOUR THE MATERIAL IS AT TEMPERATURES BETWEEN 81°F (27°C) AND 100°F (38°C). REJECT MATERIALS AT TEMPERATURES ABOVE 100°F (38°C).

Resin, Prepreg, and Adhesive Specifications and Mixing Procedures
Figure 2 (Sheet 4)

INITIAL PLY MATERIAL		REPAIR PLY MATERIAL	REPAIR PLY ALTERNATIVE MATERIAL
ALUMINUM COATED GLASS FABRIC	BMS 8-278, TYPE I, ALL CLASSES	BMS 8-79, TYPE 1581 OR TYPE 7781	NONE
	BMS 8-278, TYPE II, ALL CLASSES	BMS 8-79, TYPE 120	NONE
GLASS FABRIC	BMS 8-79, TYPE 120	BMS 8-79, TYPE 120	BMS 8-79, TYPE 1581 OR TYPE 7781 [A]
	BMS 8-129, TYPE 120		
	BMS 8-139, TYPE 120		
	BMS 8-169, TYPE 120		
	BMS 8-79, TYPE 1581	BMS 8-79, TYPE 1581 OR TYPE 7781	BMS 8-79, TYPE 120 [B]
	BMS 8-129, TYPE 181		
	BMS 8-139, TYPE 181		
	BMS 8-169, TYPE 181		

REPAIR PLY MATERIALS AND ALTERNATIVE MATERIALS

NOTES

[A] USE ONE PLY OF BMS 8-79, TYPE 1581 OR TYPE 7781 IN PLACE OF TWO PLIES OF BMS 8-79, TYPE 120.

[B] USE 3 PLIES OF TYPE 120 AS AN ALTERNATIVE FOR ONE PLY OF TYPE 1581 OR 7781.

Repair Ply Materials
Figure 3

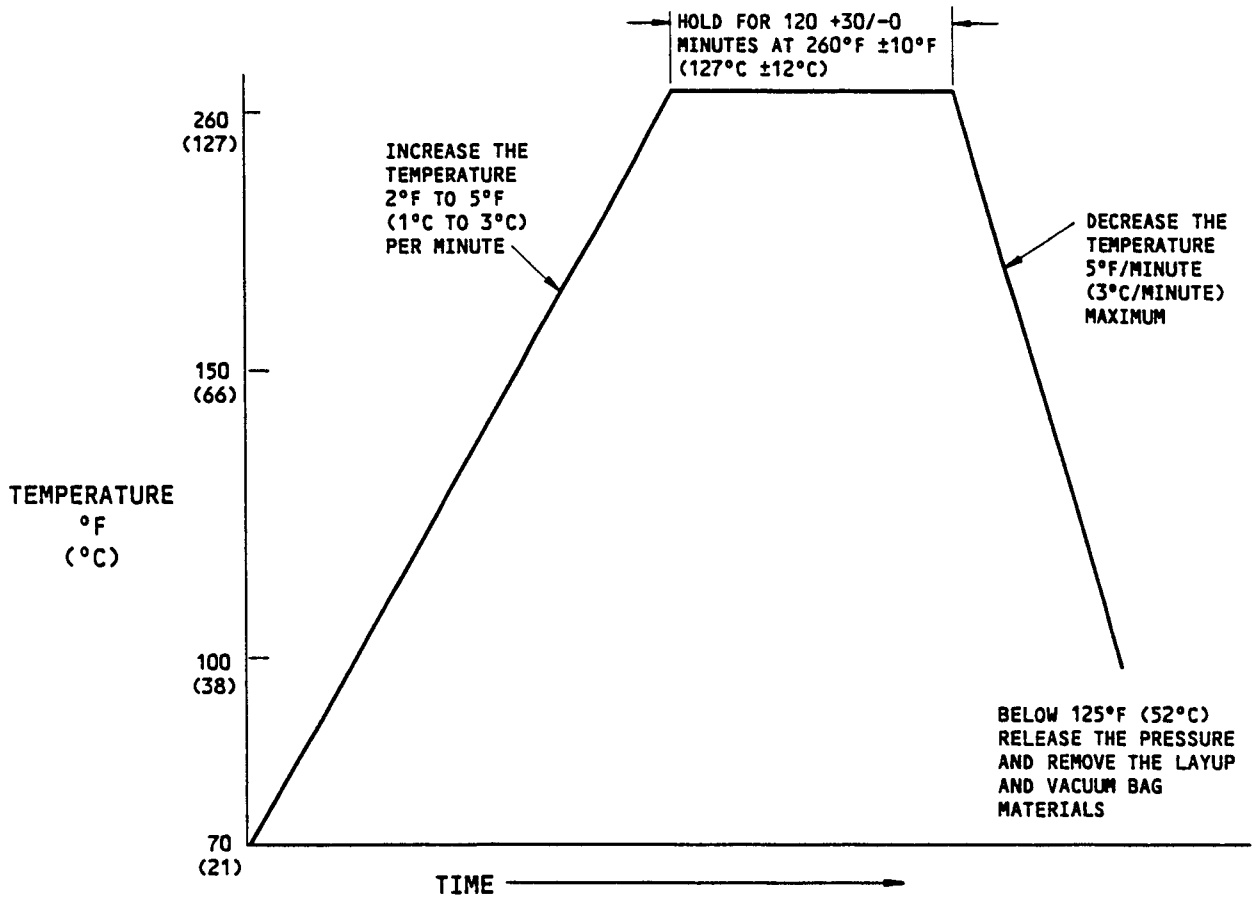

NOTES

- KEEP A VACUUM OF 22 INCHES OF MERCURY MINIMUM DURING THE FULL CURE CYCLE.

Repair Ply Cure Cycle
Figure 4

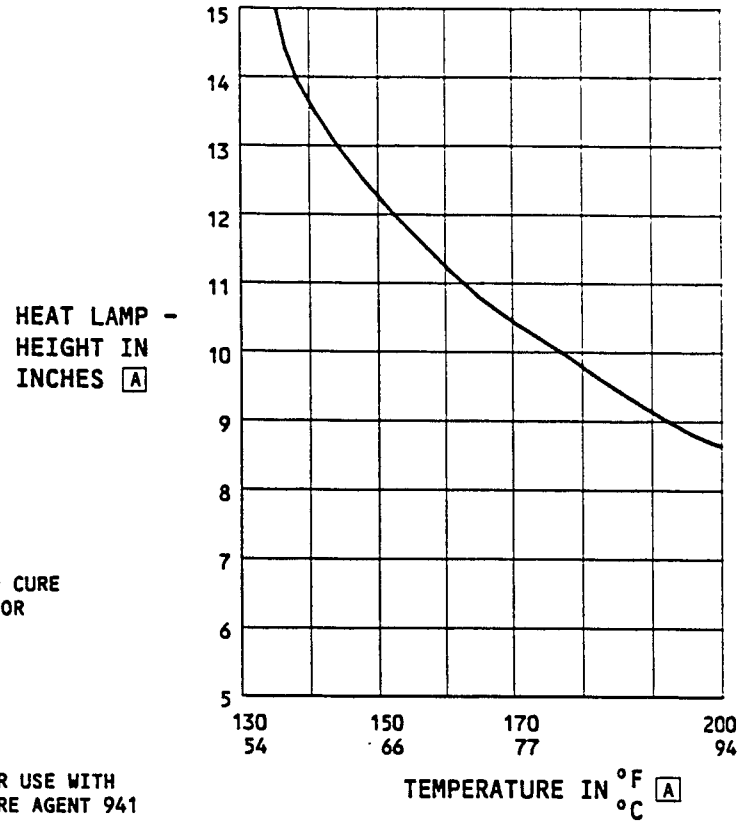

HEAT LAMP TEMPERATURE CURVE

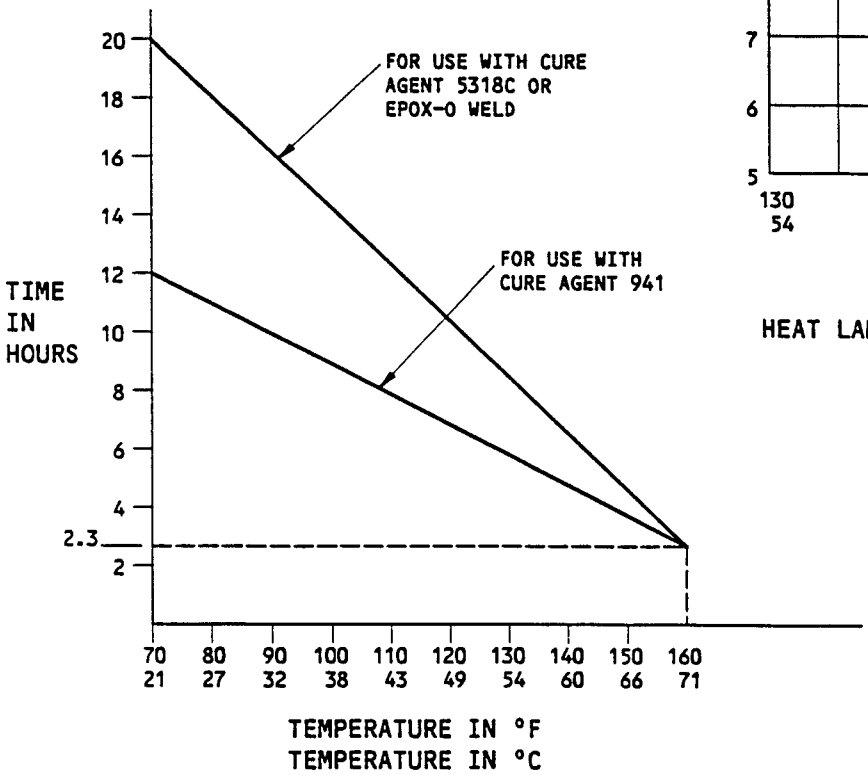

SEALER RESIN CURE TEMPERATURE

NOTES

- USE THERMOCOUPLES TO MONITOR THE TEMPERATURE.

A THE HEIGHT IN INCHES OF A 250 WATT HEAT LAMP FROM THE SURFACE OF THE PATCH VS TEMPERATURE AT THE SURFACE OF THE PART.

Potting and Laminating Resin Cure Temperature
Figure 5

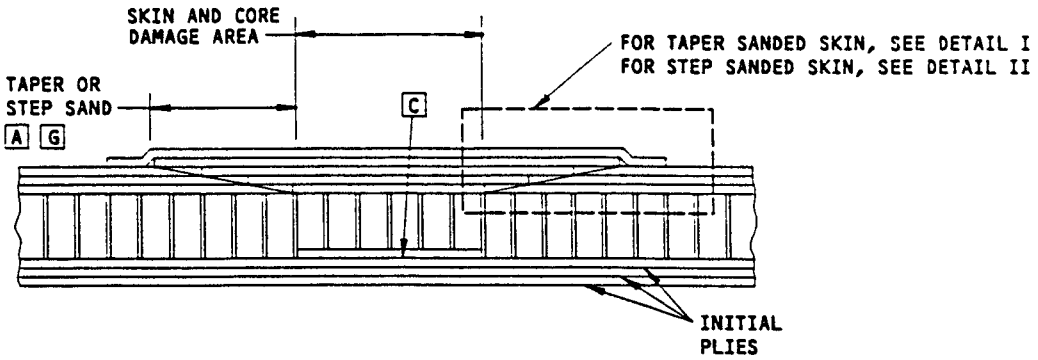

SECTION THRU TYPICAL REPAIR

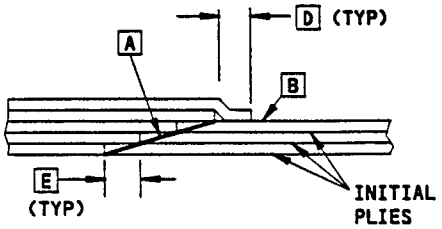

TAPER SANDED SKIN
DETAIL I

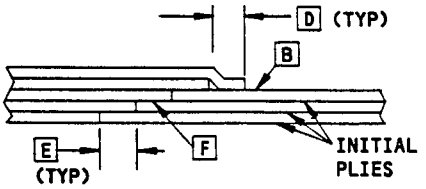

STEP SANDED SKIN
DETAIL II

NOTES

A TAPER SAND OR STEP SAND THE INITIAL PLIES AROUND THE REPAIR AREA A MINIMUM OF 0.5 OR 1.0 INCH FOR EACH INITIAL PLY H .

B DO NOT DAMAGE THE FIBERS IN THE UNTAPERED OR UNSTEPPED AREA WHEN YOU USE THE ABRASIVE PAPER.

C DO NOT DAMAGE THE FIBERS IN THE BOND PLY (PLY BONDED TO THE INITIAL CORE).

D THE FIRST ADDED REPAIR PLY MUST OVERLAP AT LEAST 0.50 OR 1.00 INCH PAST THE EDGE OF THE LAST REPAIR PLY. EACH ADDED REPAIR PLY THAT FOLLOWS MUST OVERLAP AT LEAST 0.50 OR 1.00 INCH PAST THE EDGE OF THE REPAIR PLY ADDED BEFORE IT H .

E EACH REPAIR PLY MUST OVERLAP AT LEAST 0.5 OR 1.0 INCH PAST THE EDGE OF THE REPAIR PLY APPLIED BEFORE IT H .

F REMOVE THE DAMAGED PLIES IN STEPS. DO NOT DAMAGE THE FIBERS IN THE STEPPED AREA WHEN YOU STEP SAND.

G TAPER SAND THE SURFACES IN AREAS OF CRITICAL AERODYNAMIC SMOOTHNESS. REFER TO 51-70.

H SOME INITIAL 350°F (177°C) CURE TEMPERATURE COMPONENTS IN HEAT-AFFECTED ZONES MUST HAVE A 1.0 MINIMUM OVERLAP FOR EACH REPAIR PLY AND ARE IDENTIFIED IN THE SPECIFIED COMPONENT REPAIR SUBJECTS. ALL OTHER COMPONENTS MUST HAVE A 0.5 MINIMUM OVERLAP.

Sanding and Overlap Requirements
Figure 6

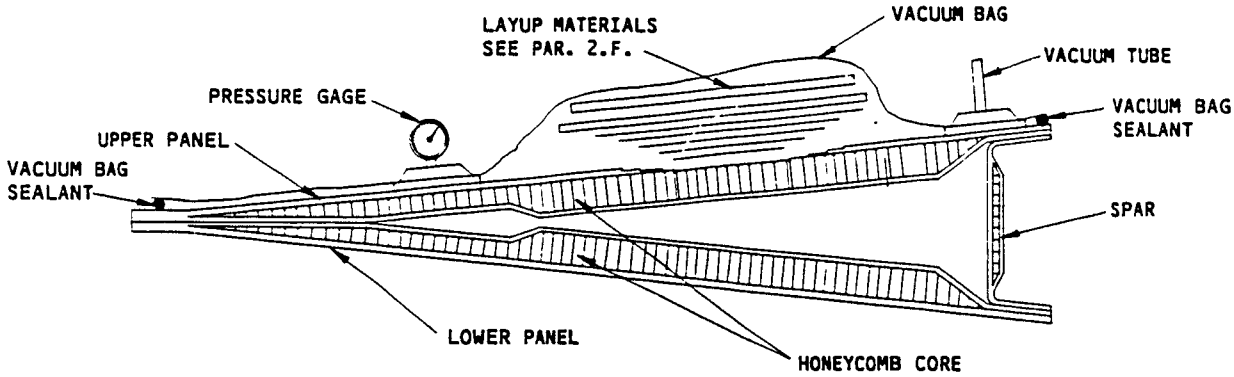

SATISFACTORY - VACUUM BAG SEALED TO ONE SIDE ONLY

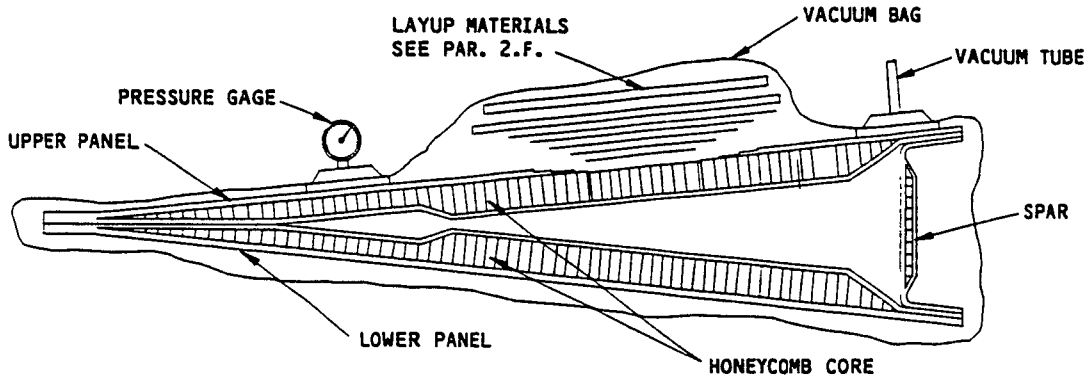

NOT SATISFACTORY - VACUUM BAG SEALED AROUND ALL OF THE PART

PARTS WHICH HAVE UPPER AND LOWER PANELS [A]

NOTES

- REFER TO PAR. 2.L. AND 2.M. FOR LAYUP AND VACUUM BAG PROCEDURES.

[A] THIS TYPE OF COMPONENT MUST NOT BE FULLY SEALED IN A VACUUM BAG. DAMAGE TO THE PART WILL OCCUR. USE A VACUUM BAG ONLY ON ONE SIDE OF THE COMPONENT.

[B] THIS TYPE OF COMPONENT MAY BE FULLY SEALED IN A VACUUM BAG OR MAY BE SEALED ON ONE SIDE ONLY.

Vacuum Bag Restrictions
Figure 7 (Sheet 1)

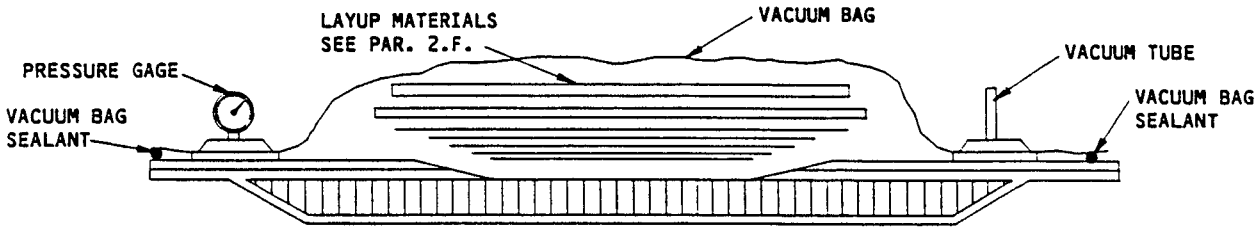

SATISFACTORY - VACUUM BAG SEALED TO ONE SIDE ONLY

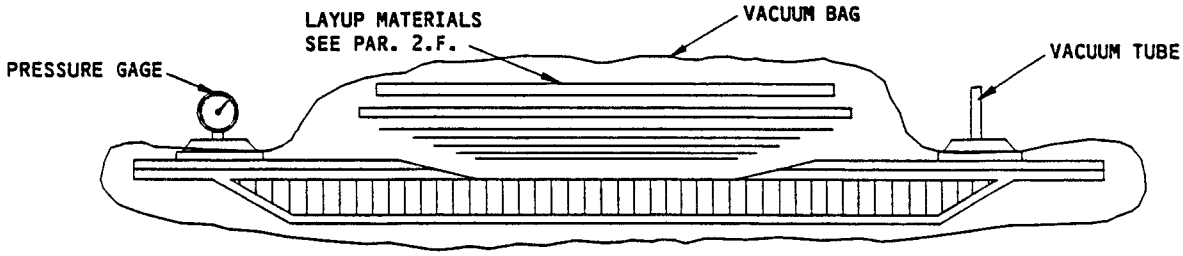

SATISFACTORY - VACUUM BAG SEALED AROUND ALL OF THE PART

PARTS WHICH HAVE ONLY OF ONE PANEL B

Vacuum Bag Restrictions
Figure 7 (Sheet 2)

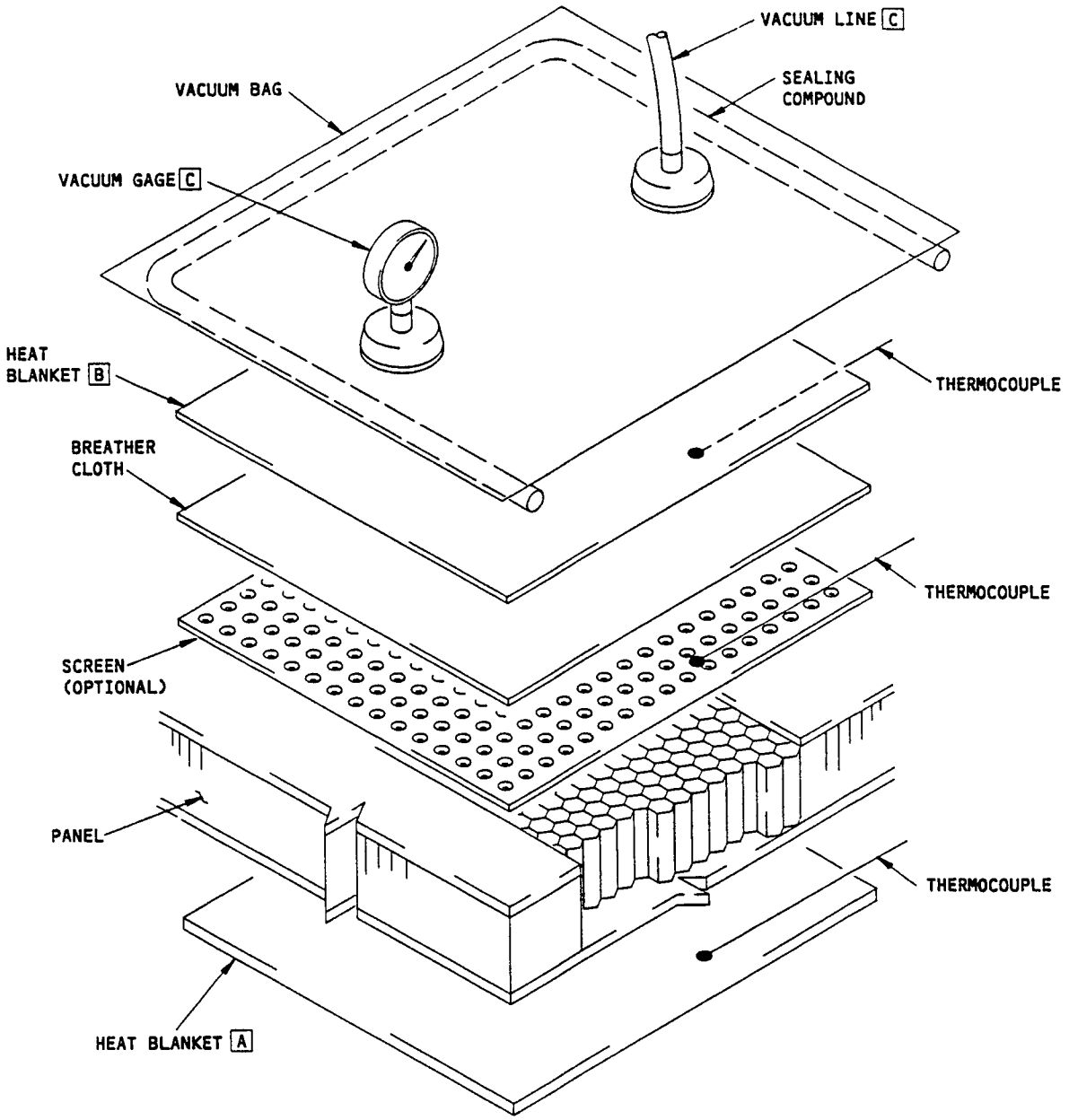

NOTES

A PREFERRED LOCATION OF THE HEAT BLANKET WHEN YOU CAN GET ACCESS TO THE OPPOSITE FACE.

B ALTERNATIVE LOCATION OF THE HEAT BLANKET WHEN YOU CANNOT GET ACCESS TO THE OPPOSITE SIDE. THIS LOCATION MAY BE USED FOR ONE MORE HEAT BLANKET TO INCREASE THE SPEED OF WATER REMOVAL.

C MAKE SURE THAT THE VACUUM PROBE AND GAGE ARE IN CONTACT WITH THE BREATHER.

Water Removal From the Honeycomb Sandwich
Figure 8

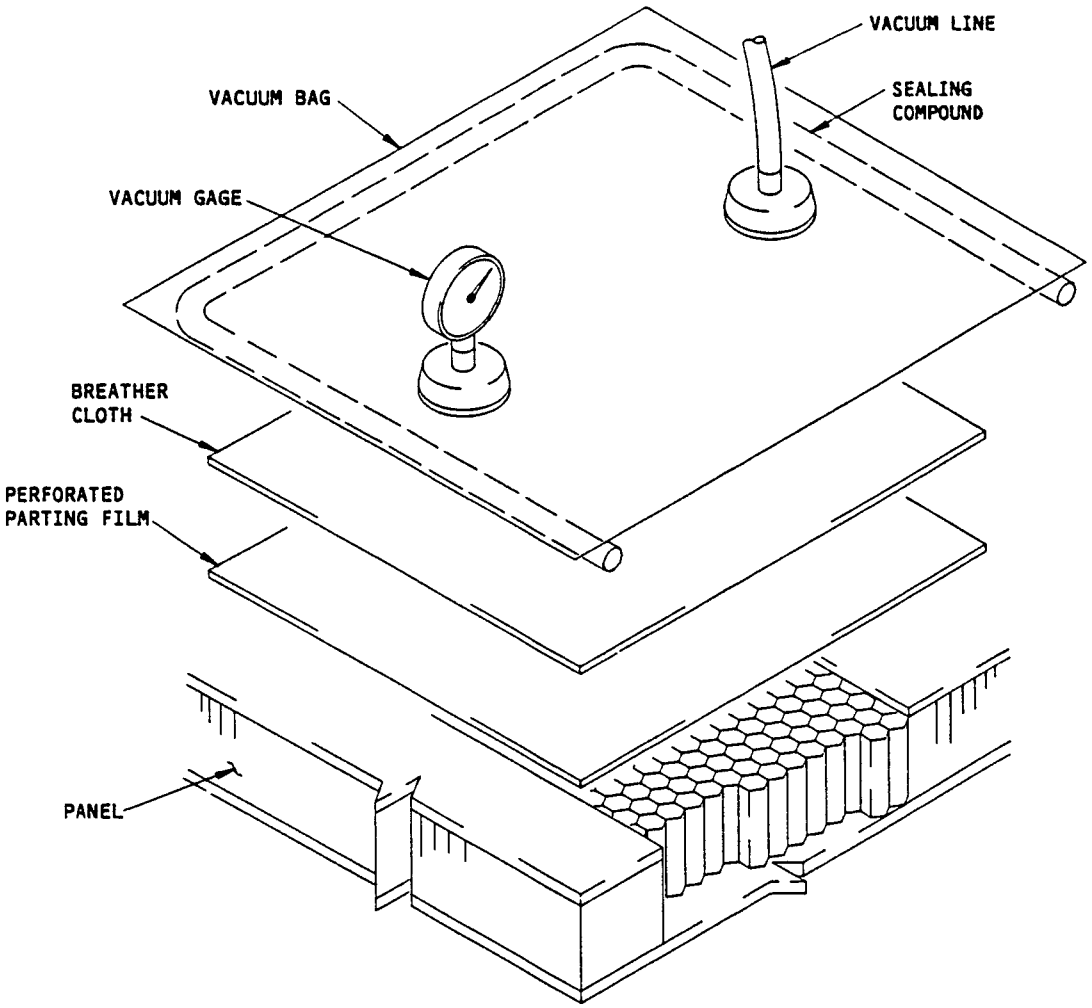

Ply Compaction Vacuum Bag System
Figure 9

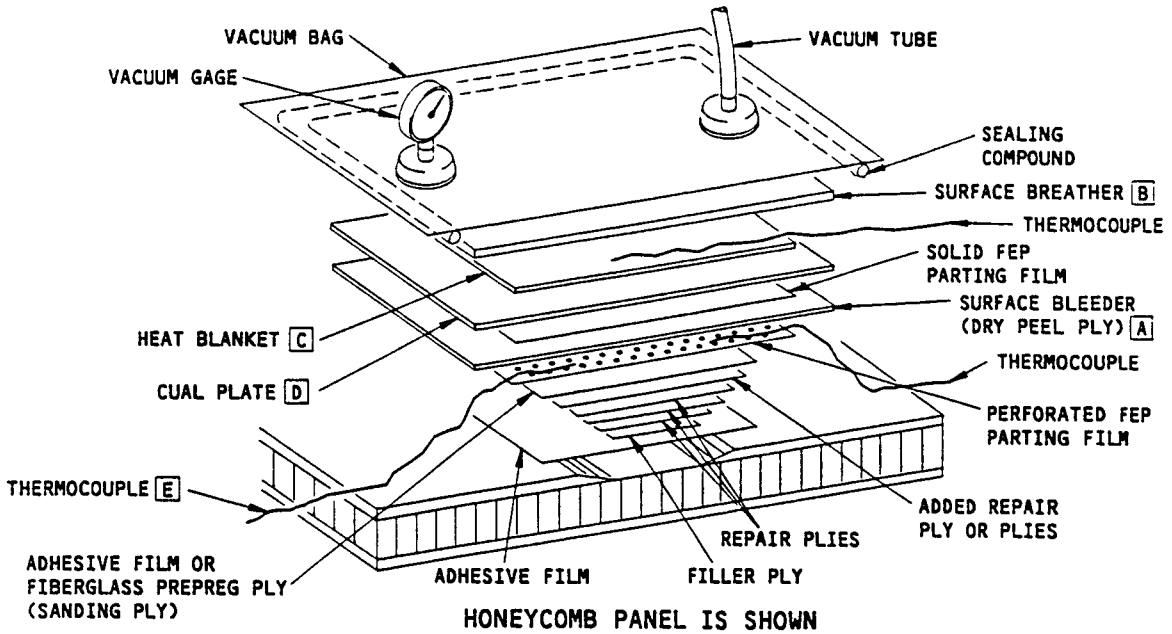

HONEYCOMB PANEL IS SHOWN
SOLID LAMINATE IS ALMOST THE SAME
VACUUM BAG STEP SEQUENCE FOR SKIN PLY REPAIR

DETAIL I

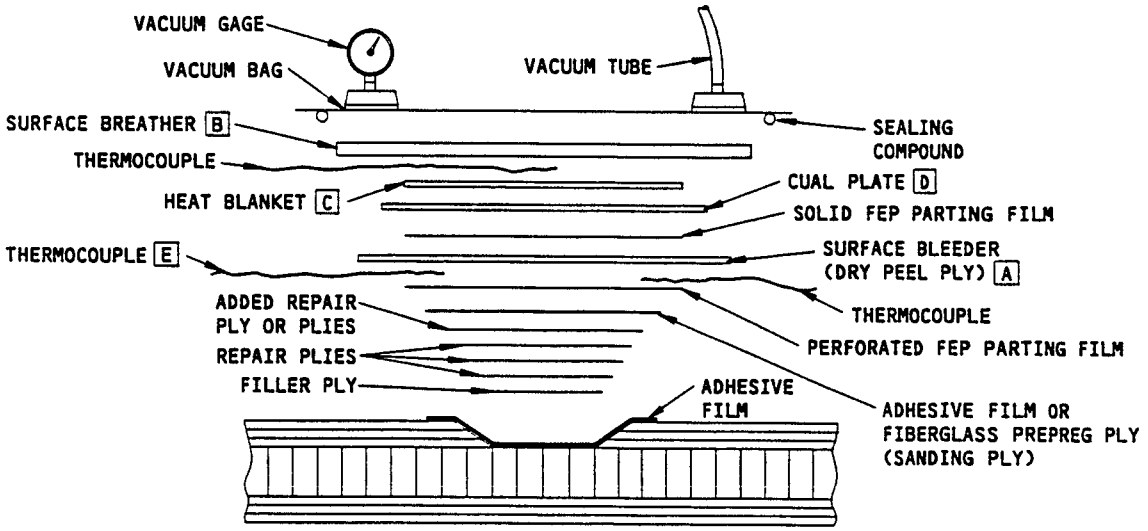

SECTION THRU THE SKIN PLY REPAIR

DETAIL II

NOTES

A THE DRY PEEL PLY MUST TOUCH THE SURFACE BLEEDER MATERIAL.

B WHEN YOU USE A HEAT BLANKET, USE 4 TO 6 LAYERS OF BREATHER MATERIAL TO PREVENT DAMAGE TO VACUUM BAG.

C THE HEAT BLANKET MUST GO A MINIMUM OF 2 INCHES MORE THAN THE EDGE OF THE REPAIR PATCH.

D 0.016-0.060 ALUMINUM SHEET (1100-0 PREFERED).

E FOR THERMOCOUPLE LOCATION REFER TO PAR. 2.M.

Application of Pressure During Cure (250°F (121°C) Cure) for Repair Plies
Figure 10

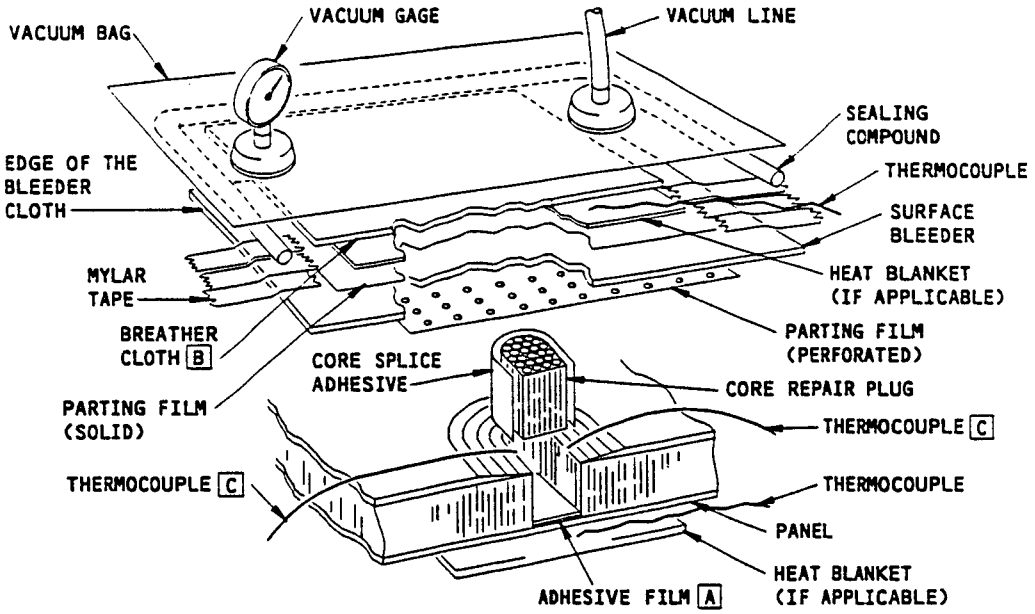

VACUUM BAG STEP SEQUENCE FOR CORE REPLACEMENT
(250°F (121°C) CURE)
DETAIL I

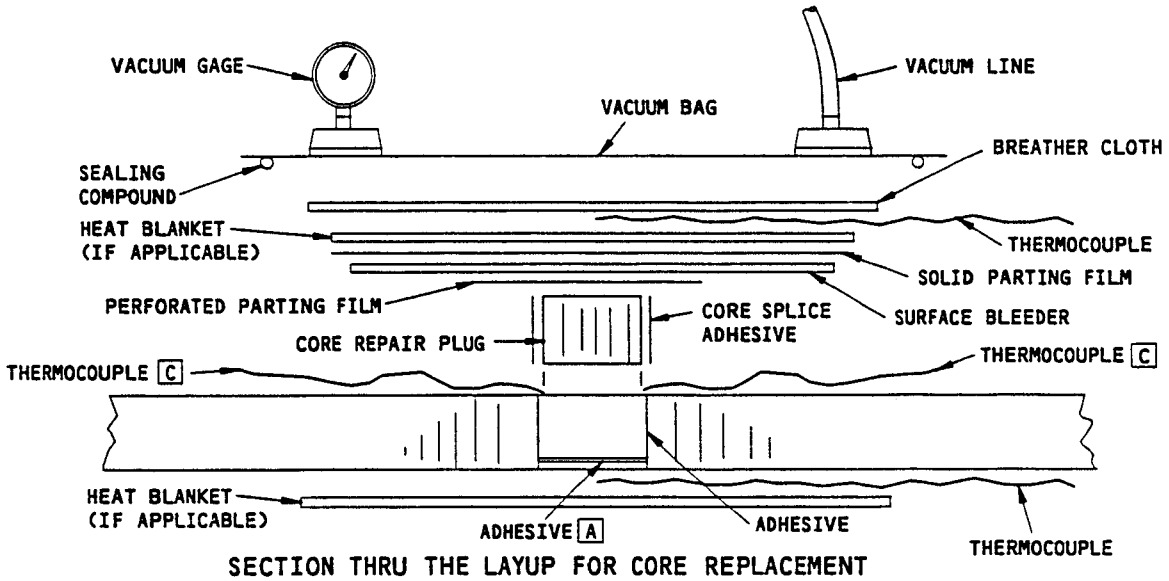

SECTION THRU THE LAYUP FOR CORE REPLACEMENT
(250°F (121°C) LAYUP ONLY)
DETAIL II

A ONE PLY OF ADHESIVE FILM (FOR FULL DEPTH CORE REPLACEMENT, WHERE DAMAGE DOES NOT GO THROUGH BOTH SKINS). FOR LESS THAN FULL DEPTH CORE REPLACEMENT, USE TWO PLIES OF ADHESIVE FILM WITH ONE PLY OF BMS 8-79 CLASS III, TYPE 120 BETWEEN THEM.

B WHEN YOU USE A HEAT BLANKET, USE 4 TO 6 LAYERS OF BREATHER MATERIAL TO PREVENT DAMAGE TO VACUUM BAG.

C FOR THERMOCOUPLE LOCATION REFER TO PAR. 2.H.

Application of Pressure During Cure (250°F (121°C) Cure) for Core Repair
Figure 11

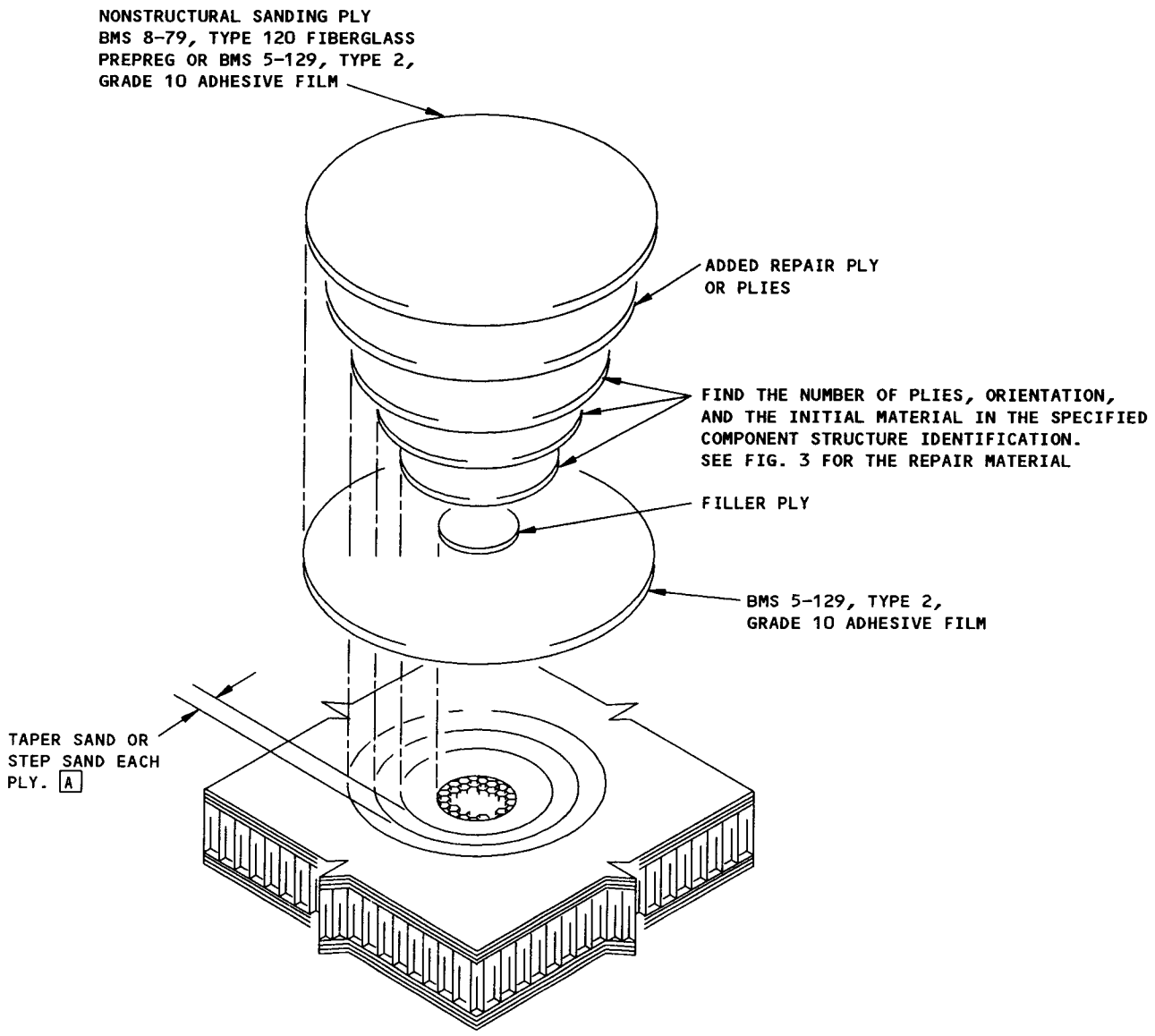

NOTES

A FOR EXTERNAL SKINS, THE TAPER SAND METHOD IS RECOMMENDED. TAPER SAND THE SURFACES IN THE AREAS OF CRITICAL AERODYNAMIC SMOOTHNESS. REFER TO 51-70.

Repair 1 - Repair the Damage to One Skin of the Honeycomb Panel
Figure 12

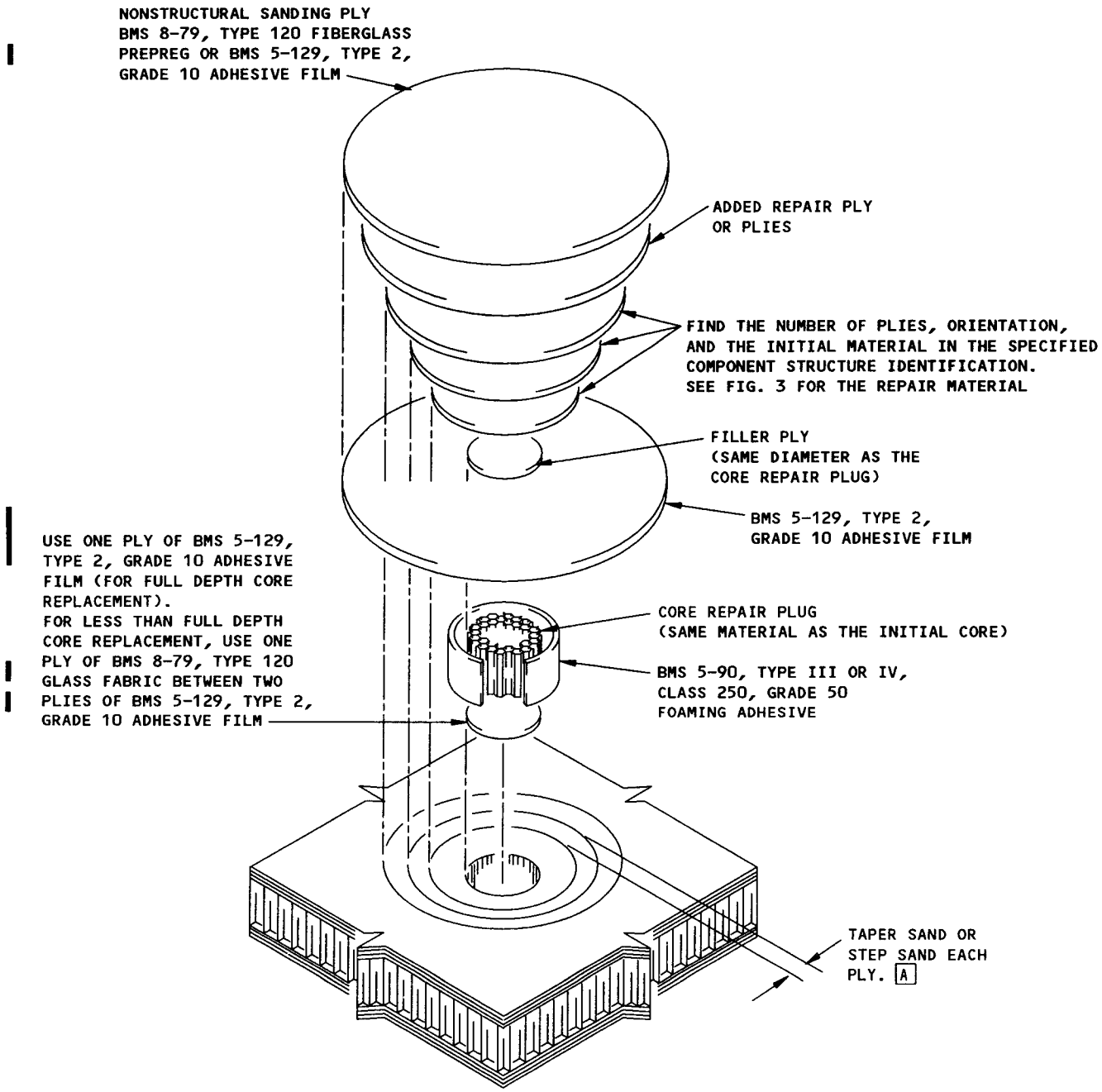

NOTES

A FOR EXTERNAL SKINS, THE TAPER SAND METHOD IS RECOMMENDED. TAPER SAND THE SURFACES IN THE AREAS OF CRITICAL AERODYNAMIC SMOOTHNESS. REFER TO 51-70.

Repair 2 - Repair the Damage, Greater Than 0.50-inch Diameter, to One Skin and Honeycomb Core
Figure 13

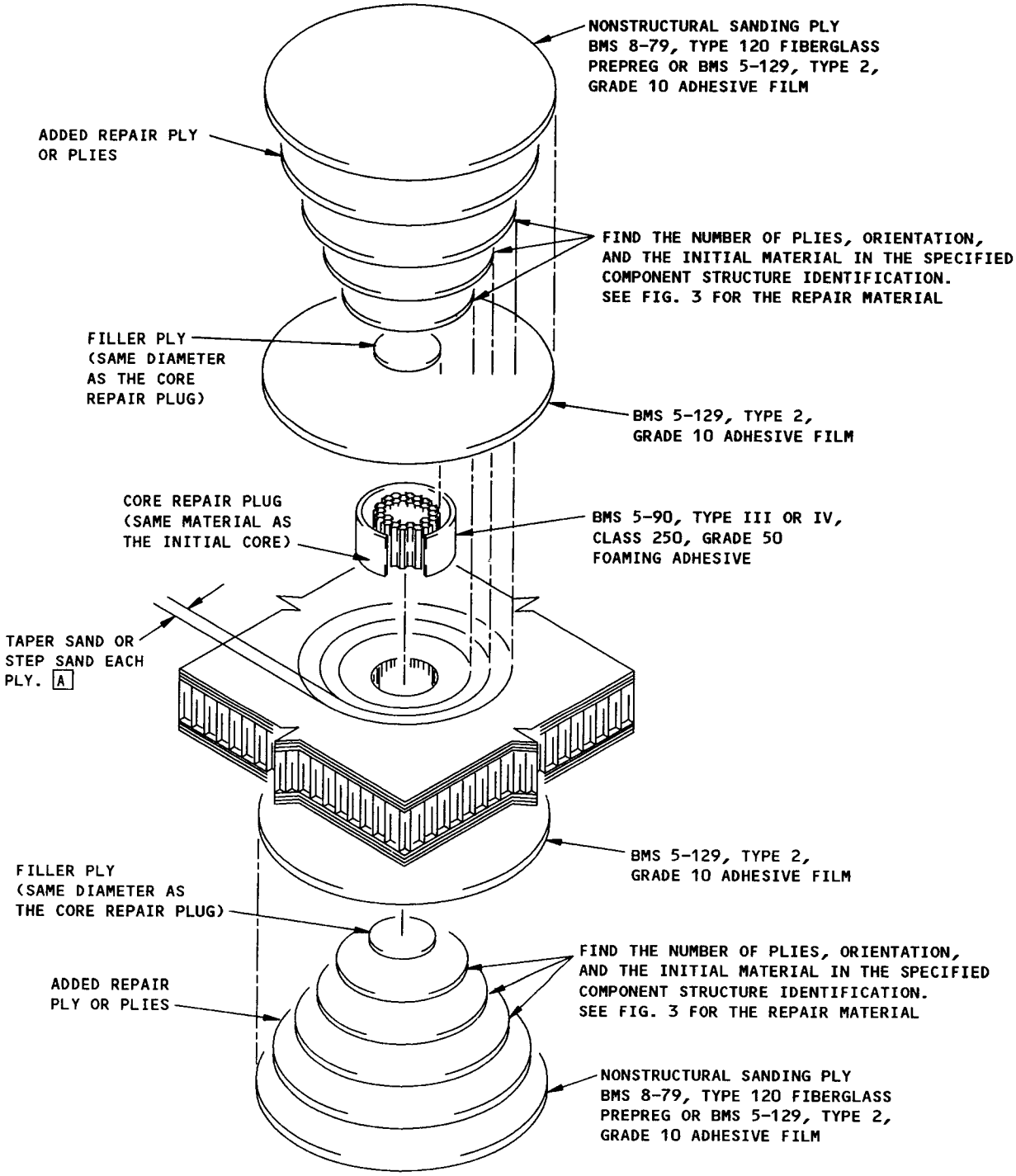

NOTES

A FOR EXTERNAL SKINS, THE TAPER SAND METHOD IS RECOMMENDED. TAPER SAND THE SURFACES IN THE AREAS OF CRITICAL AERODYNAMIC SMOOTHNESS. REFER TO 51-70.

Repair 3 - Repair the Damage to Both Skins and Honeycomb Core
Figure 14

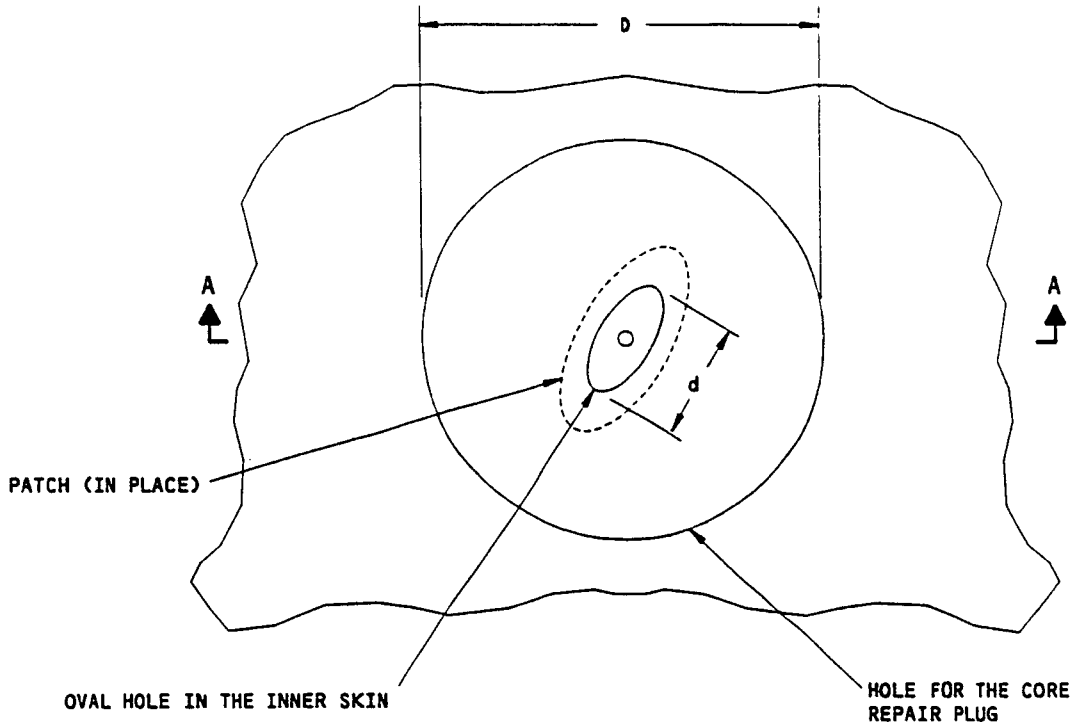

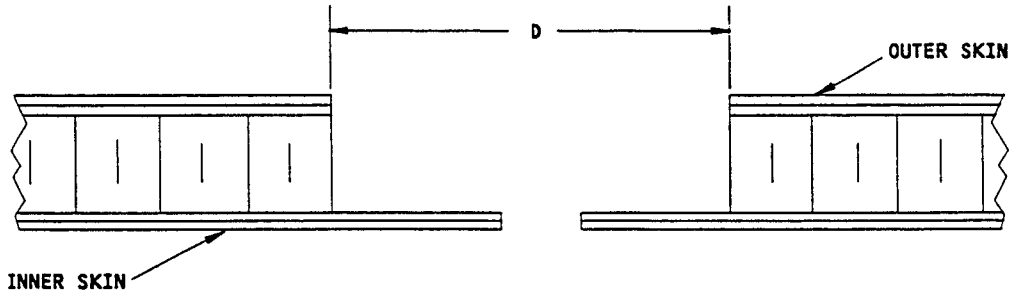

SECTION A-A
(PATCH IS NOT SHOWN)

DETAIL I

NOTES

- D = d + N + 1
  d = LARGER DIAMETER OF THE OVAL HOLE IN THE INNER SKIN
  N = NUMBER OF PLIES IN THE INNER SKIN
  D = DIAMETER OF THE HOLE FOR THE CORE REPAIR PLUG

[A] FOR EXTERNAL SKINS, THE TAPER SAND METHOD IS RECOMMENDED. TAPER SAND THE SURFACES IN THE AREAS OF CRITICAL AERODYNAMIC SMOOTHNESS. REFER TO 51-70.

Repair 4 - Repair the Damage to the Honeycomb Panel When Access is Limited to One Side
Figure 15 (Sheet 1)

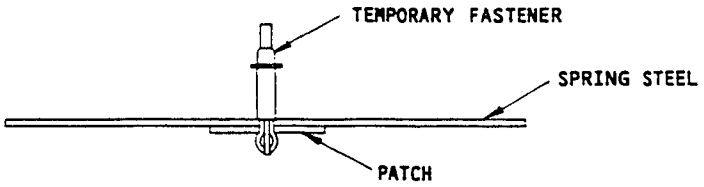

ASSEMBLE THE PATCH AND SPRING STEEL
DETAIL II

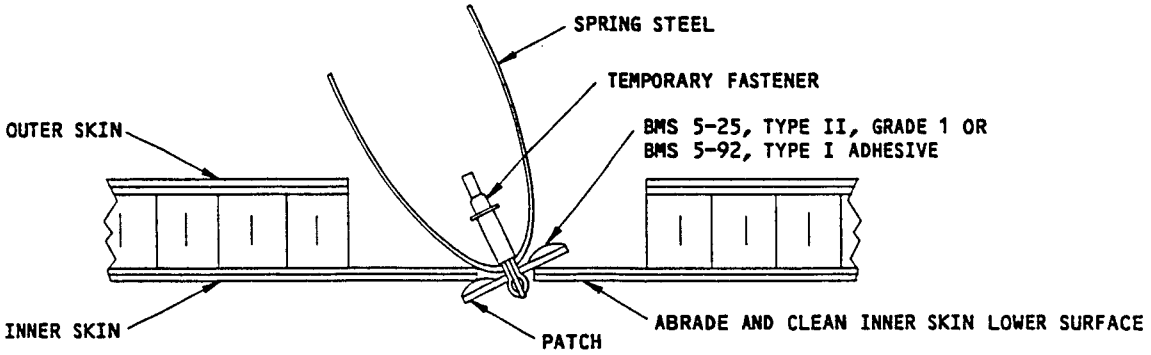

INSERT THE PATCH INTO THE OVAL HOLE
DETAIL III

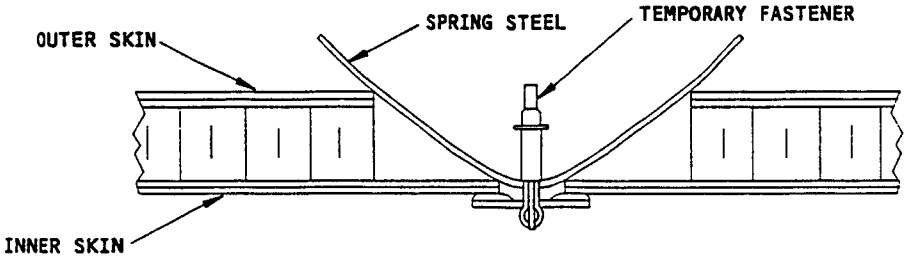

HOLD THE PATCH IN PLACE DURING THE CURE
DETAIL IV

Repair 4 - Repair the Damage to Honeycomb Panel When
Access is Limited to One Side
Figure 15 (Sheet 2)

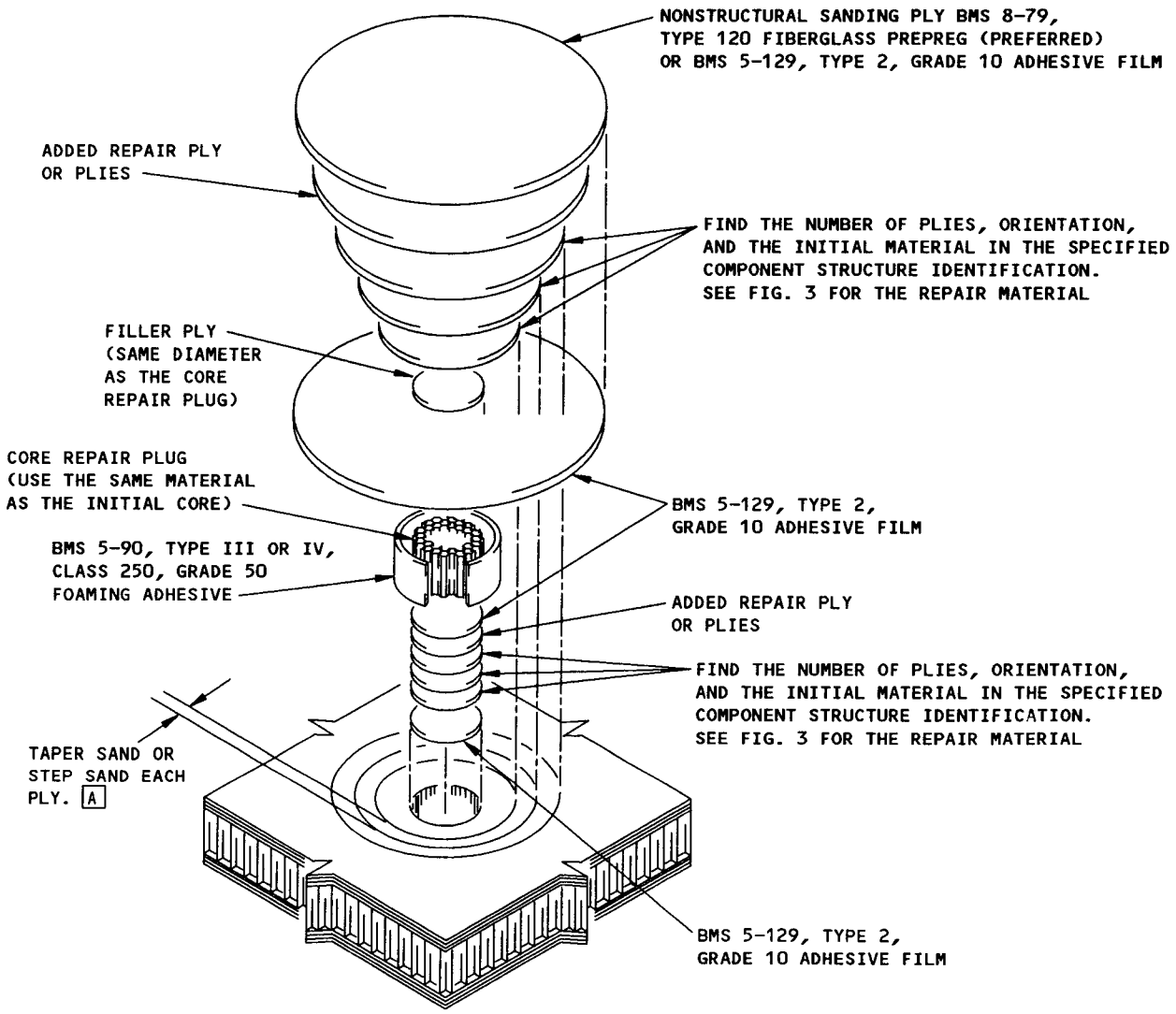

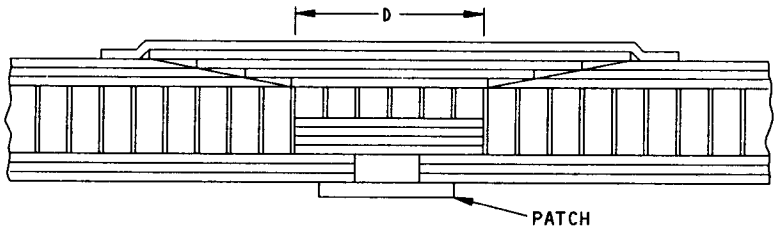

SECTION THRU THE REPAIR

Repair 4 - Repair the Damage to the Honeycomb Panel When Access is Limited to One Side
Figure 15 (Sheet 3)

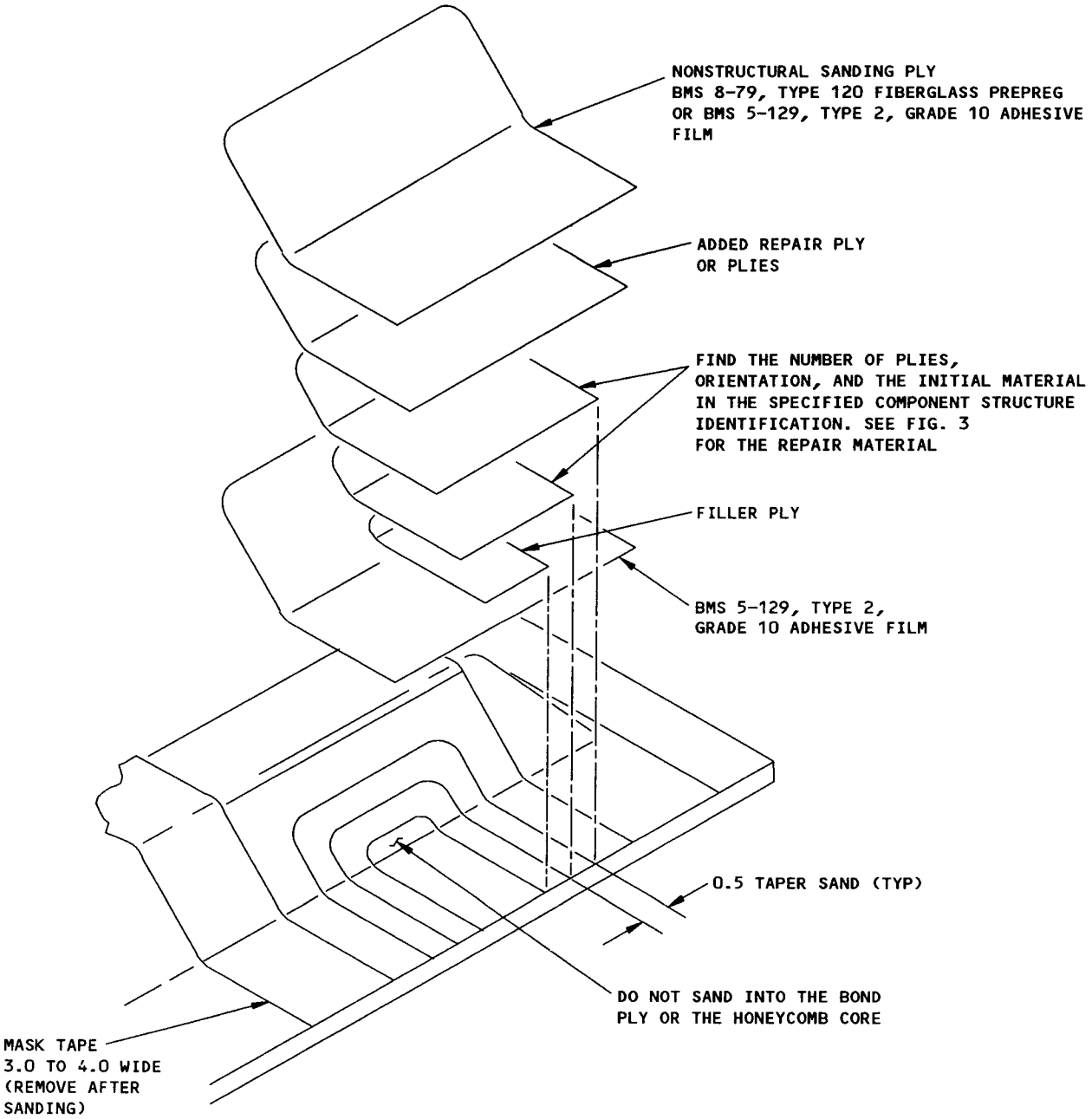

Repair 5 - Repair the Damage to the Plies on the Edge of the Honeycomb Panel
Figure 16

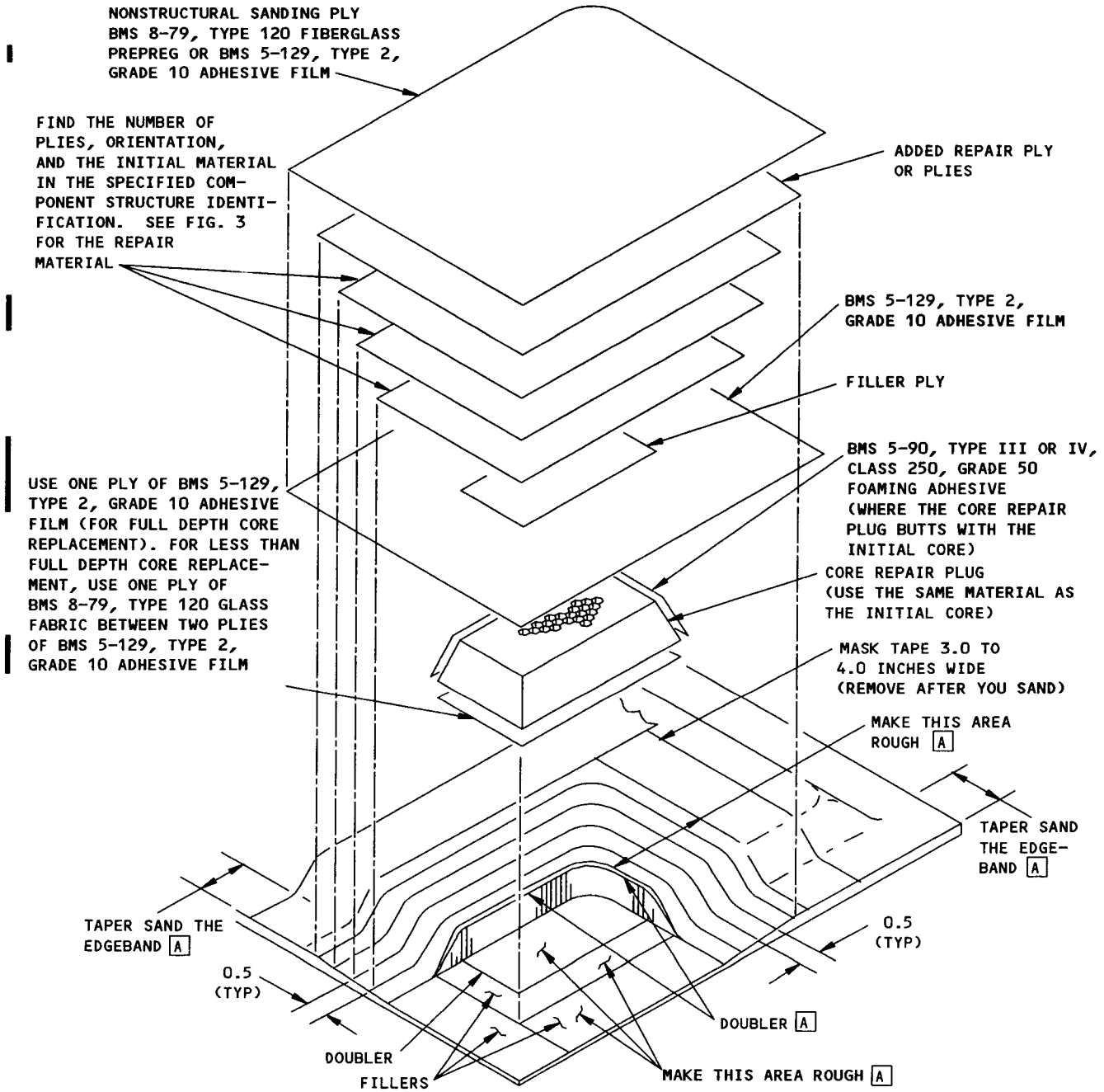

NOTE

A AS AN OPTION, YOU MAY TAPER SAND THE SURFACE OF THE SKIN AND DOUBLER PLIES ABOVE AND BELOW THE HONEYCOMB CORE. HOWEVER, YOU MUST TAPER SAND THE EDGEBAND.

Repair 6 - Repair the Damage to the Honeycomb Core on the Edge of the Honeycomb Panel
Figure 17

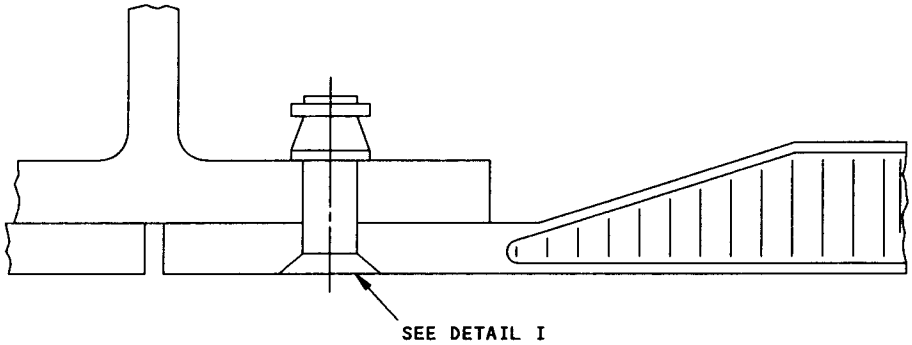

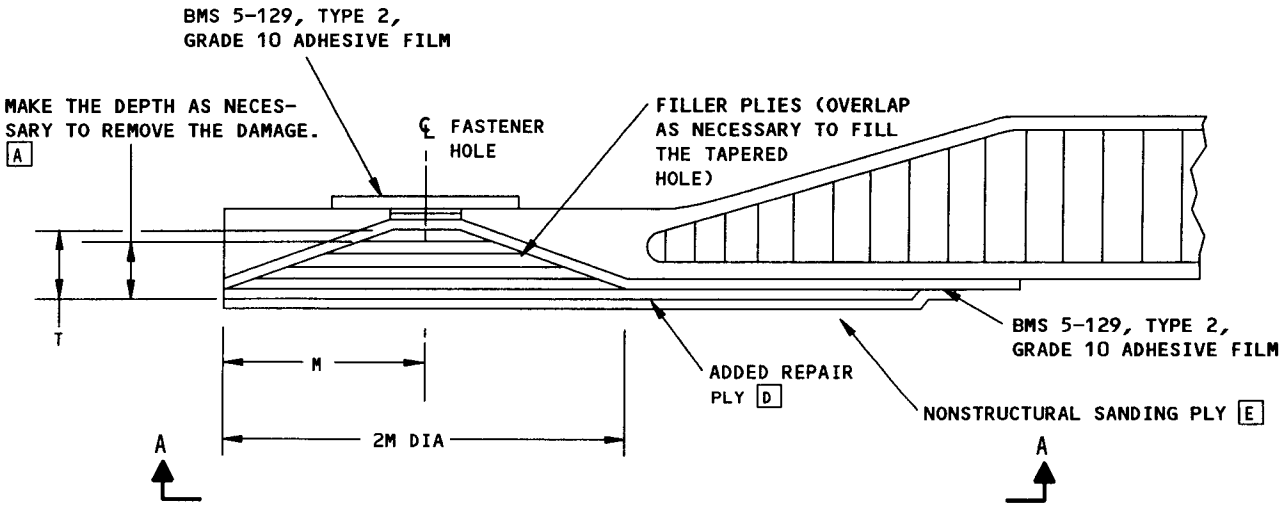

REPAIR OF THE HONEYCOMB PANEL IS SHOWN
REPAIR OF THE SOLID LAMINATE PANEL IS ALMOST THE SAME

DETAIL I

NOTES

- M = 5T MAXIMUM AS SHOWN, WHERE T IS THE THICKNESS OF THE EDGEBAND. DO NOT CUT INTO THE CORE.
- THIS REPAIR IS ONLY APPLICABLE WHEN NO MORE THAN TWO ATTACH HOLES ARE DAMAGED IN ANY TEN ADJACENT ATTACH HOLES.
- D EQUALS THE FASTENER DIAMETER

A APPLY THE FILLER PLIES AS NECESSARY TO FILL THE DAMAGED AREA.

B CUT THE ADDED REPAIR PLY AT LEAST 0.5 INCH PAST THE EDGE OF THE DAMAGED AREA ALL AROUND DAMAGED AREA.

C CUT THE ADDED REPAIR PLY TO GIVE AT LEAST A 2D EDGE MARGIN.

D POINT THE WEAVES OF THE ADDED REPAIR PLIES IN THE SAME DIRECTION AS THE WEAVE OF THE INITIAL OUTER LAYER.

E FIBERGLASS PREPREG BMS 8-79, TYPE 1581 OR BMS 5-129 ADHESIVE FILM.

Repair 7 - Repair the Damaged Panel Attach Hole in the Honeycomb Panel Edgebands or Along the Edges of Solid Laminate Panels
Figure 18 (Sheet 1)

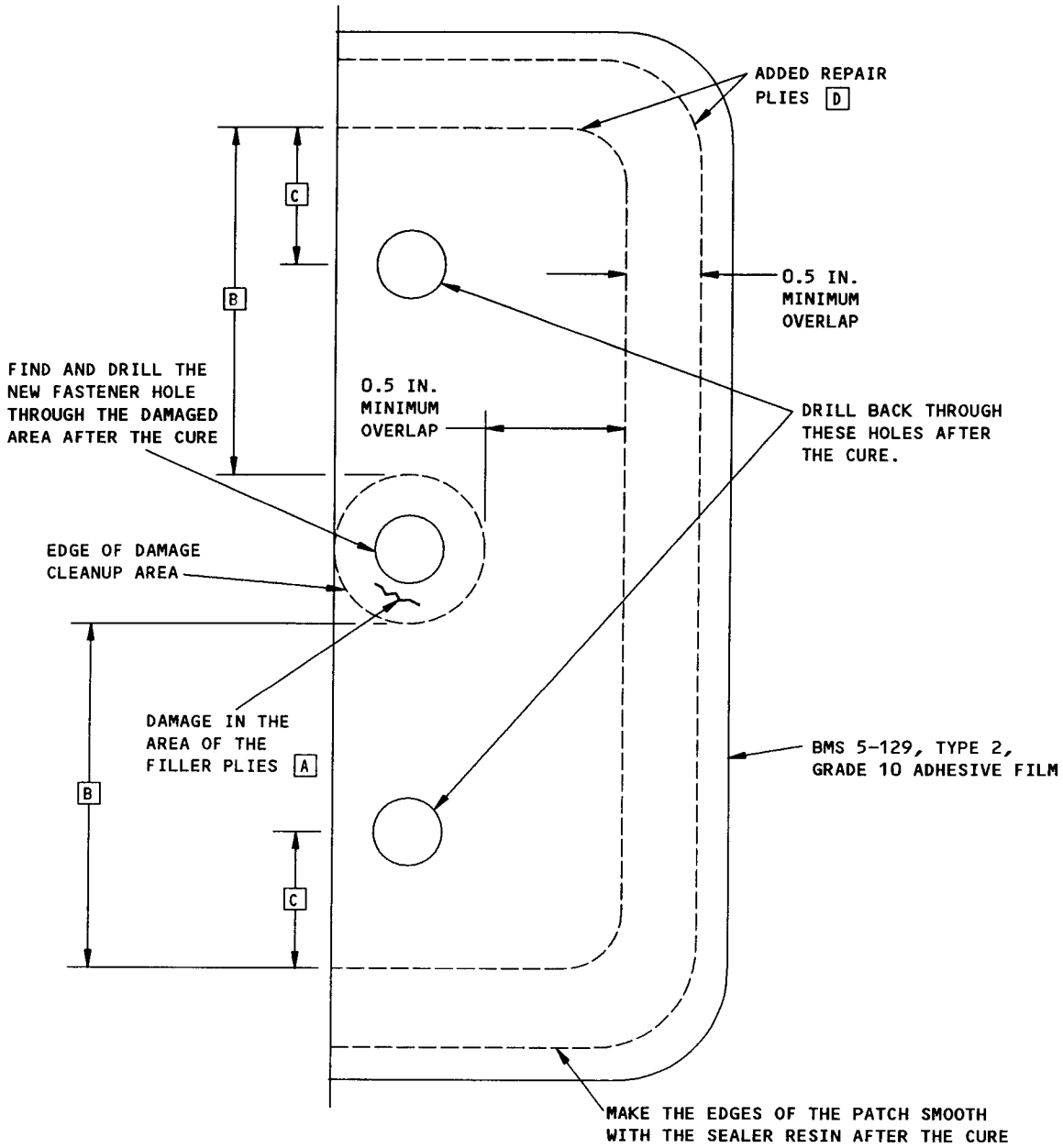

SECTION A-A

Repair 7 - Repair the Damaged Panel Attach Hole in Honeycomb Panel Edgebands or Along the Edges of Solid Laminate Panels
Figure 18 (Sheet 2)

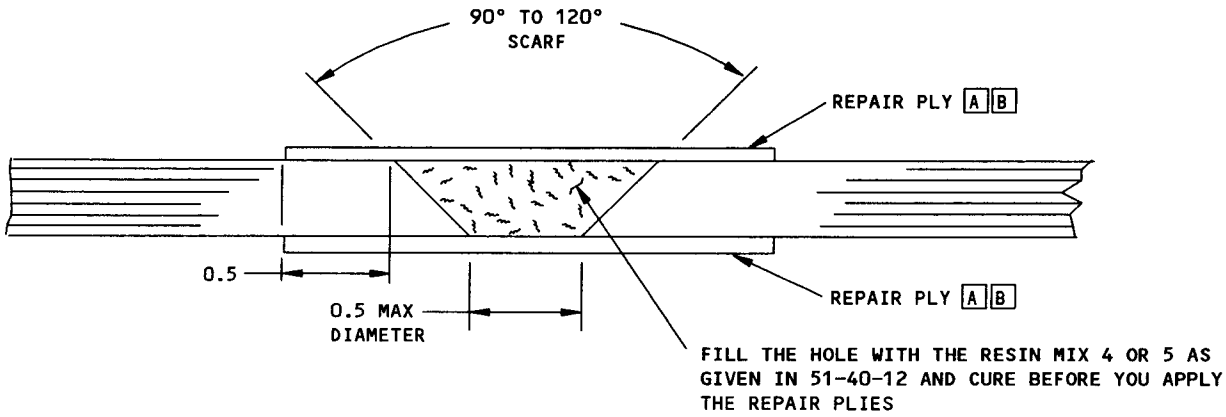

NOTES

A PREPARE AND APPLY ONE PLY OF BMS 9-3, TYPE H-2 OR H-3 GLASS FABRIC AS GIVEN IN 51-40-12. POINT THE PLY WEAVE IN THE SAME DIRECTION AS THE WEAVE OF THE INITIAL SURFACE PLY.

B THIS PLY IS NOT REQUIRED IF THE HOLE IS COVERED BY PREPREG. REPAIR PLY.

Repair 8 - Repair the Damage, 0.50-inch Diameter or Less, to Solid Laminates, or Fastener Hole
Figure 19

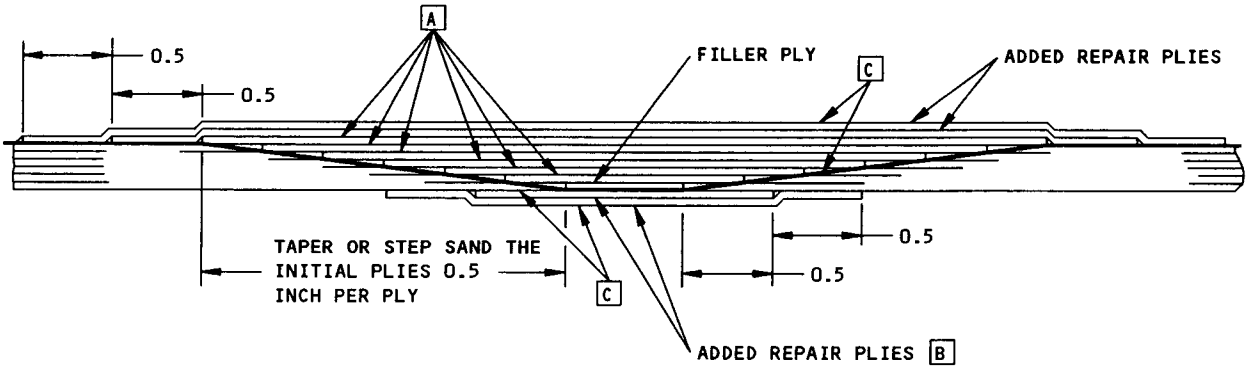

NOTES

A FIND THE NUMBER OF PLIES, ORIENTATION, AND THE INITIAL MATERIAL IN THE SPECIFIED COMPONENT STRUCTURE IDENTIFICATION. SEE FIG. 3 FOR THE REPAIR MATERIAL.

B USE ADDED REPAIR PLIES AT THIS LOCATION ONLY IF THE DAMAGE GOES THROUGH THIS SURFACE.

C PUT ONE PLY OF BMS 5-129, TYPE 2, GRADE 10 ADHESIVE FILM OVER THE REPAIR AREA BEFORE YOU APPLY THE REPAIR PLIES AND BMS 8-79, TYPE 120 FIBERGLASS PREPREG (PREFERRED) OR BMS 129, TYPE 2, GRADE 10 ADHESIVE FILM OVER THE LAST REPAIR PLY IN THE PATCH. CUT THE ADHESIVE FILMS 1/8 INCH LARGER ALL AROUND THAN THE LARGEST REPAIR PLY IN THE PATCH.

Repair 9 - Repair the Damage, Greater than 0.50-inch Diameter, to Solid Laminates
Figure 20

REPAIR GENERAL - ALUMINUM HONEYCOMB REPAIRS - 250°F (121°C) CURE

1. Applicability

NOTE: The repairs in this subject will not have an effect on a Structurally Significant Item (SSI) given in SRM 51-00-4, Fig. 3. Thus, no change to the Supplemental Structural Inspection Document (SSID) inspection program is necessary.

A. This subject gives instructions for 250°F (121°C) cure repairs to bonded aluminum alloy skin and honeycomb core sandwich structure.

B. This subject applies to the repair of Boeing airplane structure that was manufactured at 250°F (121°C) or 350°F (177°C).

C. Only use this procedure if an SRM repair section or an approved repair plan refers to this subject.

D. Do not use this procedure for a rebuild or remanufacture of Boeing airplane structure (or for a repair that is larger than the limits given in Fig. 1).

2. General

A. Refer to the SRM component repair section for:

* The identification of the materials and the references to the engineering drawings
* The allowable damage data
* The references to this subject
* The types of repairs that are permitted and/or the repair size limits (When applicable)
* Other data that is not given in this subject

B. In this subject are the instructions for:

* Damage removal
* Surface preparation procedures for aluminum alloys
* Application of adhesive primers
* Application of film and paste adhesives
* Aluminum honeycomb core splicing
* Vacuum bag procedures
* Cure procedures
* Bond inspection procedures
* Repair procedures

3. References

SRM 51-00-6	Structural Repair Definitions
SRM 51-10-1	Inspection and Removal of Damage
SRM 51-10-2	Protective Treatment of Metallic and Composite Materials
SRM 51-20-1	Sheet Metal Materials
SRM 51-20-4	Repair Sealing
AMM 51-21-0	Protective Finishes

BOEING PROPRIETARY - Copyright © - Unpublished Work - See title page for details.

AMM 51-20-21	Cleaning/Painting
BAC 5514	Common Bonding Requirements for Structural Adhesives
BAC 5514-589	Application of Corrosion Inhibiting Adhesive Primer
BAC 5555	Phosphoric Acid Anodizing of Aluminum for Structural Bonding
BSS 7217	Air Cleanliness, Shop Compressed Air
D6-49327	Certification of Autoclaves for Metal Bonding and Curing of Composite Structure
D6-56273	Qualification of Heat Blankets for Hot Bonding
NDT Part 1, 51-01-01	Inspection of Repairs to Composite Structure
NDT Part 1, 51-04-00	Ultrasonic
NDT Part 1, 51-05-01	Tap Test Inspection of Honeycomb Sandwich Structure
SOPM 20-30-03	General Cleaning Procedures
SOPM 20-30-97	Solvents for Final Cleaning Before Structural Bonding (Series 97)

4. Definitions

A. Boegel (AC130)

(1) A type of complex inorganic polymer from the sol-gel family of chemical compounds.

B. Damage

(1) Change to the surface of a part that is caused by deterioration, corrosion, disbands, erosion, dents, gouges, cracks, scratches, punctures and holes.

C. Disbond

(1) The failure of a bond adhesive that causes separation between a skin and core or doubler.

D. Durability

(1) A low crack growth rate, a strong bond, and good corrosion protection.

E. Engineering Review

(1) Approval by an engineer with the experience, qualifications and authority to make decisions on structural repairs. The engineer will make sure that the repair design has the necessary airworthiness requirements (the repaired part has the necessary strength, durability, damage tolerance (if necessary), and will function on the airplane correctly).

(2) Boeing can also give an engineering review, if necessary.

F. One-Stage Cure

(1) The core and skins are bonded together at the same time. (One application of heat).

G. Rebuild/Remanufacture

BOEING PROPRIETARY - Copyright © - Unpublished Work - See title page for details.

(1) The damage is too large to use repair procedures and materials (manufacturing procedures are necessary). Permission from Boeing and your local regulatory agency can be necessary because of intellectual property, certification, quality control, and safety rules.

NOTE: With permission, you can use the Boeing engineer drawings, material specification, and process specifications.

H. Two-Stage Cure

(1) When the repair parts are bonded in two cure steps (Two separate applications of heat).

(a) The first stage: The core is bonded into the repair and then cured with one side of the core open. (Before the last skin is put on and then cured).

(b) The second stage: The last skin (one or more doublers) is put on and then cured.

I. More sources of definitions

(1) SRM 51-00-6

(2) SRM 51-10-1

5. Repair Summary

A. Refer to Table 1 for an index of the paragraphs and figures.

REFERENCE	TITLE
Paragraph 6.	Find the Limits of the Damage
Paragraph 7.	Remove the Damage
Paragraph 8.	Make the repair parts
Paragraph 9.	Installation of the Honeycomb Repair Core
Paragraph 10.	Inspect the fit of the repair parts
Paragraph 11.	Use of the Surface Preparation Procedures
Paragraph 12.	The Phosphoric Acid Containment System (PACS) Procedure
Paragraph 13.	The Phosphoric Acid Non-Tank Anodizing (PANTA) Procedure
Paragraph 14.	The Boegel (AC-130) Prebond Treatment Procedure
Paragraph 15.	Application of BMS 5-89 Adhesive Primer to the Bond Surface
Paragraph 16.	Hydrofluoric (HF) - Alodine Procedure
Paragraph 17.	Application of BAC 5710, Type 60 Adhesive Primer
Paragraph 18.	Application of BMS 5-101 Film Adhesive
Paragraph 19.	Application of BMS 5-92 or BMs 5-141 Paste Adhesive
Paragraph 20.	Cure the bond
Paragraph 21.	Do an examination of the bonded repair
Paragraph 22.	Clean, seal, and finish.

Repair General Index
Table 1 (Sheet 1)

BOEING PROPRIETARY - Copyright © - Unpublished Work - See title page for details.

REFERENCE	TITLE
Fig. 1	Repair Options
Fig. 2	Flow Chart of the Repair Steps
Fig. 3	Damage Removal
Fig. 4	Phosphoric Acid Containment System (PACS)
Fig. 5	Phosphoric Acid Non-Tank Anodize (PANTA) Layup
Fig. 6	Polarized Light Test - Verification of Anodic Oxide Film
Fig. 7	Repair Doubler Specifications for Flush Repairs
Fig. 8	Repair Doubler Specifications for External Patch Repairs
Fig. 9	Installation of the Repair Core
Fig. 10	Cure Time for BMS 5-92, Two-part Paste Adhesive
Fig. 11	Cure Time for BMS 5-141 Paste Adhesive
Fig. 12	Installation of the Repair Doubler
Fig. 13	Thermocouple Locations
Fig. 14	Layup of Vacuum Bagging Materials

Repair General Index
Table 1 (Sheet 2)

B. The illustrations and instructions in this repair show different examples of repairs and types of damage. You can do repairs that put together one or more of these examples. Use the correct repair procedures for each type of example. For example, if a circular shaped repair is shown, you can use a non-circular shape as an alternative.

C. This subject contains four surface preparation procedures:

(1) The Phosphoric Acid Containment System (PACS) procedure

(2) The Phosphoric Acid Non-Tank Anodize (PANTA) procedure

(3) The Boegel (AC-130) Prebond Treatment procedure

(4) The Hydrofluoric (HF) - Alodine procedure

D. There are two adhesive primer application procedures:

(1) BMS 5-89 Type I or Type II application procedure

(2) BAC 5710, Type 60 application procedure

E. There are four metal-to-metal bond adhesives used in this subject.

(1) BMS 5-101, Type II film adhesive, cured at 225° to 260°F (107° to 127°C)

(2) BMS 5-92, Type I paste adhesive, cured at 70° to 260°F (21° to 127°C)

(3) BMS 5-92, Type V paste adhesive, cured at 70° to 180°F (21° to 82°C)

BOEING PROPRIETARY - Copyright © - Unpublished Work - See title page for details.

(4) BMS 5-141 paste adhesive, cured at 70° to 200°F (21° to 93°C)

F. To make a satisfactory repair, you must do what follows:

(1) Use the correct materials.

(2) Remove all the water and other contamination from the part.

(3) Do the bond procedures in a clean, dry location.

(4) Make the bond surfaces clean.

(5) Do a satisfactory surface preparation.

(6) Make sure that all of the parts have the correct shape and dimensions.

(7) Make sure that the repair parts have the correct flatness or curvature. The parts must install correctly when you apply light finger pressure.

(8) Make sure that the adhesive bondline thickness is correct.

(9) Remove some of the air and gases from the honeycomb core before you start a cure cycle. (Vacuum bagged repair procedure).

(10) Use sufficient pressure, time, and temperature to cure the repair.

G. Identify the material containers with.a label that contains the data that follows:

* BMS Specification
* Type
* Class
* Supplier Name
* Batch Number
* Date of preparation

H. Make sure that you do the bond procedures in a clean, dry location (a location that does not have contamination from exhaust fumes, rain, or other unwanted materials). Make sure that shop compressed air does not have water, oil, or other contamination. Use Boeing Specification Support Standard BSS 7217 "Air Cleanliness, Shop Compressed Air" (or the equivalent specification) to see if the shop compressed air is satisfactory.

NOTE: You can make a tent to seal the area from contamination.

I. A phosphoric acid tank anodize procedure is a permitted alternative to the PAA non-tank procedures given in this section. Make sure that your tank facilities, chemicals, and procedures are satisfactory. Refer to Boeing Process Specification BAC 5555, "Phosphoric Acid Anodizing of Aluminum for Structural Bonding" (or the equivalent specification).

BOEING PROPRIETARY - Copyright © - Unpublished Work - See title page for details.

J. If you use a heat blanket, make sure that it is qualified and will operate correctly. D6-56273, "Qualification of Heat Blankets for Hot Bonding", is a procedure that Boeing uses. You can refer to this procedure or use an equivalent procedure to qualify your heat blanket.

K. If you use an autoclave, make sure that your autoclave facilities and procedures are satisfactory. Refer to Boeing Process Specification 5514, "Common Bonding Requirements for Structural Adhesives" and D6-49327, "Certification of Autoclaves for Metal Bonding and Curing Composite Structure" (or the equivalent specifications).

L. If you use an oven, make sure that it has equipment that can circulate the heated air, supply a vacuum and control the temperature.

WARNING: USE MECHANICAL AIRFLOW AND BREATHING PROTECTION WHEN YOU WORK IN A CLOSED SPACE OR AREA. MAKE SURE THAT THE FRESH AIR SUPPLY IS NOT BLOCKED. IF YOU GET FLUIDS IN YOUR EYES, FLUSH WITH WATER IMMEDIATELY AND GET MEDICAL AID.

M. Read the manufacturer's safety data sheet (MSDS) for each of the materials you use in this procedure. Wear protective clothing and equipment if it is specified in the MSDS.

N. Keep all resin and adhesive materials in the storage condition specified in the manufacturer's instructions or the Boeing specifications (as applicable). Do not keep the materials out of storage for longer than necessary.

O. Read each CAUTION in this procedure. They will help to prevent damage to the repair and prevent more damage to the airplane part.

P. Read each WARNING in this procedure. They will help to prevent injury to you and others.

Q. Refer to Fig. 1, Repair Options to help you make a decision on the correct repair procedure.

R. Refer to Fig. 2, Flow Chart of the Repair Steps before you start the repair procedure.

S. Refer to Table 2 and make a repair selection.

SRM Section	Title
51-40-21	Repair of a Disbond at an Edge of Aluminum Honeycomb Structure
51-40-22	Repairs to Small Damage
51-40-23	Septumized Core Repairs
51-40-24	Repairs to Large Damage

Repair Examples
Table 2:

BOEING PROPRIETARY - Copyright © - Unpublished Work - See title page for details.

SURFACE PREPARATION	REPAIR TYPE	PASTE ADHESIVES	FILM ADHESIVES	
			VACUUM BAG CURE [A]	AUTOCLAVE CURE [B]
		MAXIMUM DAMAGE SIZE [C]		
HF ALODINE	INTERIM [D]	2.0 INCHES (50 mm) LENGTH OR DIAMETER	2.0 INCHES (50 mm) LENGTH OR DIAMETER	2.0 INCHES (50 mm) LENGTH OR DIAMETER
BOEGEL (AC-130)	INTERIM [D]	2.0 INCHES (50 mm) LENGTH OR DIAMETER	NOT APPLICABLE	NOT APPLICABLE
	PERMANENT	[E]	64 SQUARE INCHES (400 SQUARE CM) [F]	200 SQUARE INCHES (0.13 SQUARE METERS)
TANK PAA, PACS, PANTA	INTERIM [D]	2.0 INCHES (50 mm) LENGTH OR DIAMETER	NOT APPLICABLE	NOT APPLICABLE
	PERMANENT	[E]	64 SQUARE INCHES (400 SQUARE CM) [F]	200 SQUARE INCHES (0.13 SQUARE METERS) SEE DETAIL I [G]

TABLE A

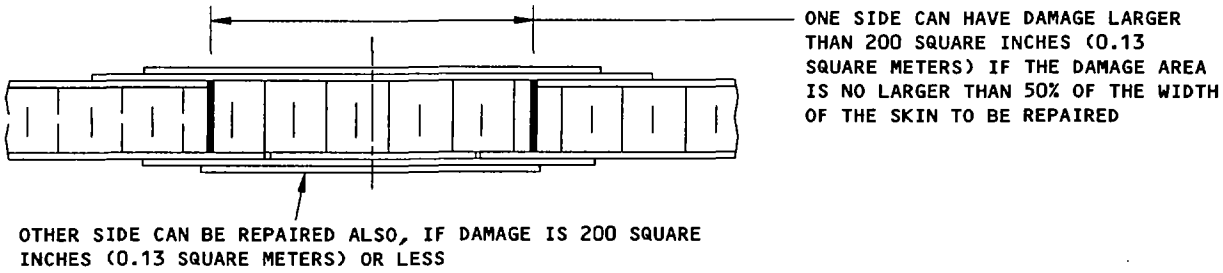

PERMITTED DAMAGE SIZES THAT CAN BE REPAIRED IN AN AUTOCLAVE (APPLICABLE TO SURFACES PREPARED WITH TANK PAA (BAC5555), PACS OR PANTA) [G]

DETAIL I

Repair Options
Figure 1 (Sheet 1)

BOEING PROPRIETARY - Copyright © - Unpublished Work - See title page for details.

NOTES:

[A] OVEN, HEAT BLANKET, HEAT LAMPS OR FORCED HOT AIR ARE PERMITTED. MAKE SURE THAT THE CORRECT CURE TEMPERATURE CAN BE CONTROLLED DURING THE CYCLE. REFER TO PARAGRAPH 20.

[B] AUTOCLAVE MUST BE PRESSURIZED AS SPECIFIED IN PARAGRAPH 20.

[C] AFTER YOU FIND AND REMOVE THE DAMAGE AS SPECIFIED IN PARAGRAPH 7.

IF YOU DO A FLUSH REPAIR: THE CUTOUT ON THE SIDE THAT WILL HAVE THE EXTERNAL DOUBLER MUST BE LESS THAN OR EQUAL TO THE SIZES IN THIS TABLE.

[D] REFER TO SRM 51-00-6 FOR STRUCTURAL REPAIR DEFINITIONS. INTERIM REPAIRS MUST BE INSPECTED EACH 24 MONTHS OR LESS, OR EACH 3500 FLIGHT CYCLES OR LESS (NO LATER THAN THE INTERVAL THAT OCCURS FIRST).

[E] THE MAXIMUM PERMITTED DAMAGE LENGTH (OR DIAMETER) IS 1.0 INCH (25 mm) OR THE ALLOWABLE DAMAGE LIMIT (THE SMALLER OF THE TWO). ONLY BMS 5-92, TYPE V OR BMS 5-141 ARE PERMITTED IN PERMANENT REPAIRS.

[F] YOU CAN INCREASE THE MAXIMUM SIZE TO 200 SQUARE INCHES (0.13 SQUARE METERS) IF YOU DO THE STEPS THAT FOLLOW:

- DO A TWO STAGE CURE REPAIR PROCEDURE (WHEN HONEYCOMB CORE IS DAMAGED)
- USE BMS 5-121 POSITIONING FABRIC WITH THE FILM ADHESIVE.

[G] TO REBUILD/REMANUFACTURE PARTS THAT HAVE DAMAGE TO MORE THAN 200 SQUARE INCHES (0.13 SQUARE METERS) OR MORE THAN 50% OF THE AREA OF THE SKIN TO BE REPAIRED, YOU MUST:

- GET AN ENGINEERING REVIEW
- USE APPROVED ENGINEERING DRAWINGS FOR THE COMPONENT TO BE REPAIRED
- USE APPROVED MATERIALS AND MANUFACTURING PROCESSES SPECIFIED IN THE COMPONENT ENGINEERING DRAWINGS
- RESTORE THE PART TO THE INITIAL DESIGN CONFIGURATION.

Repair Options
Figure 1 (Sheet 2)

BOEING PROPRIETARY - Copyright © - Unpublished Work - See title page for details.

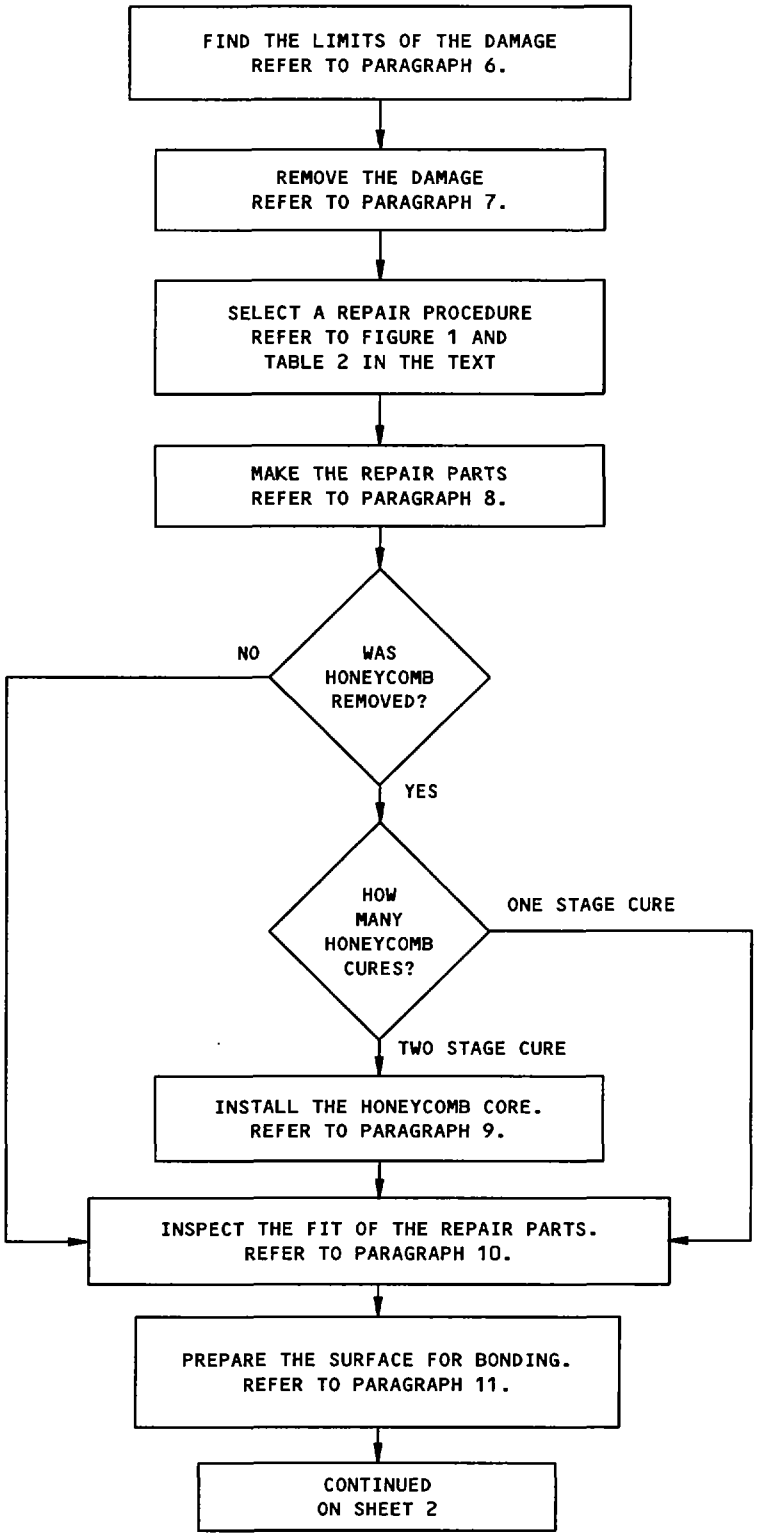

Flow Chart of the Repair Steps
Figure 2 (Sheet 1)

BOEING PROPRIETARY - Copyright © - Unpublished Work - See title page for details.

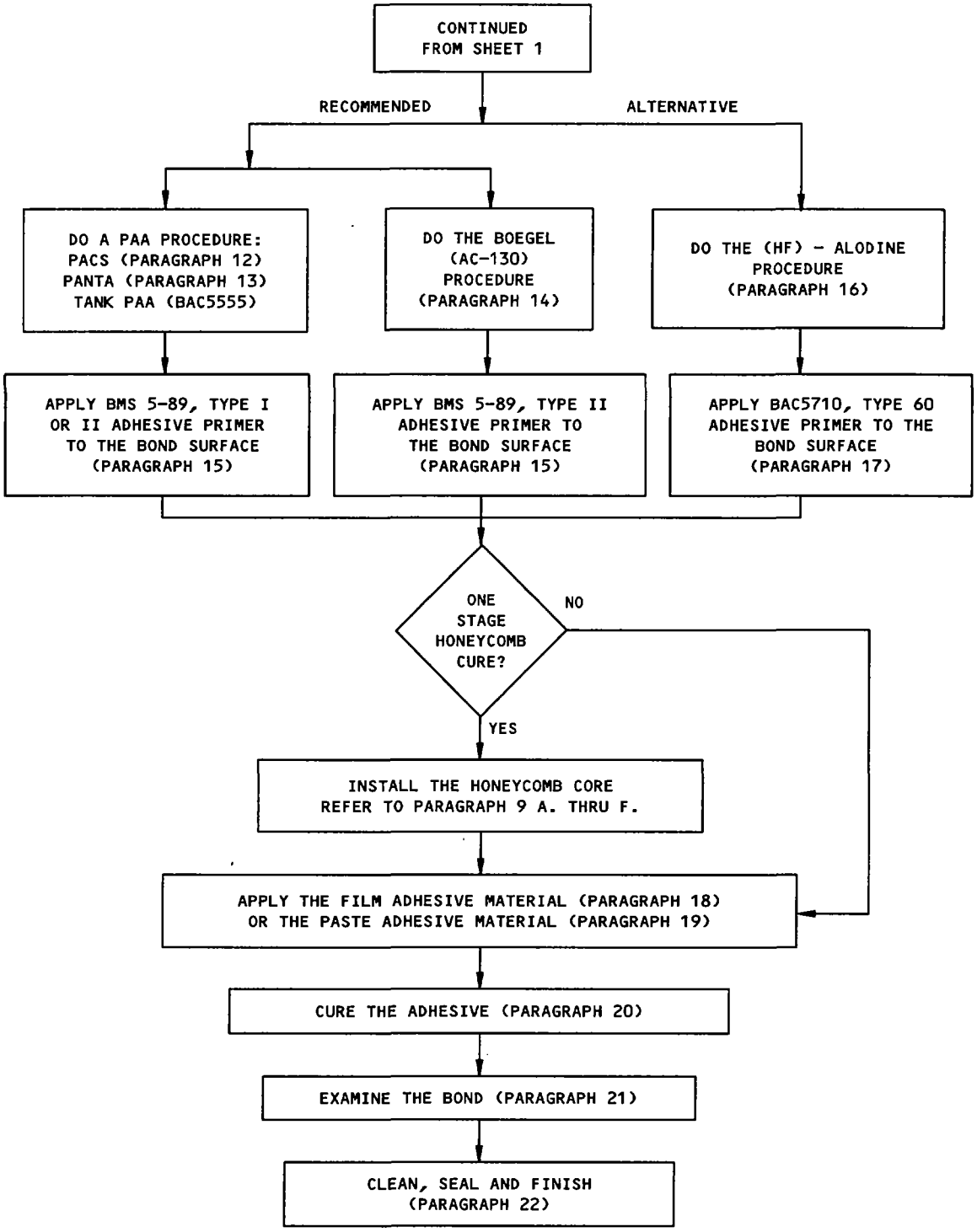

Flow Chart of the Repair Steps
Figure 2 (Sheet 2)

BOEING PROPRIETARY - Copyright © - Unpublished Work - See title page for details.

6. Find the Limits of the Damage

A. Examine the damage in the repair area.

WARNING: DO NOT GET SOLVENTS IN YOUR MOUTH, YOUR EYES, OR ON YOUR SKIN. DO NOT BREATHE THE FUMES FROM SOLVENTS. SOLVENTS ARE DANGEROUS MATERIALS. SOLVENTS CAN BE FLAMMABLE OR CAUSE DAMAGE TO THE ENVIRONMENT. REFER TO THE MATERIAL SAFETY DATA SHEETS (MSDS) AND THE LOCAL SAFETY PRECAUTIONS.

(1) Clean the damaged area with a soft cloth moist with cleaning solvent. Refer to SOPM 20-30-03 for the applicable cleaning solvent and general cleaning procedures.

CAUTION: USE NON-DESTRUCTIVE PROCEDURES TO MAKE SURE THAT THERE IS NO WATER TRAPPED IN THE PART BEFORE YOU APPLY HEAT TO CURE THE ADHESIVES. DAMAGE TO THE PART WILL OCCUR IF THE WATER IS NOT REMOVED.

(2) Do a visual and NDI examination of the damaged area to find disbonds and other types of damage to the structure.

NOTE: Refer to NDT Part 1, 51-04-00 for instrumented NDI procedures, or NDT Part 1, 51-05-01 for tap test procedures.

B. Examine the initial BMS 5-89 adhesive primer (if applicable).

(1) It is not necessary to remove the initial BMS 5-89 adhesive primer from the bond surface if the primer has the conditions that follow:

(a) There is no contamination from paints, oils, chemicals, or other unwanted materials.

(b) Metal-to-metal bonding - there are no scratches or missing primer that:

1) Show more than 0.1 square inch (65 square mm) of bare metal.

2) Are more than 0.5 inch (13 mm) in length.

3) Are less than 0.5 inch (13 mm) from an edge.

4) Are less than 3.0 inches (75 mm) (edge-to-edge) apart.

(c) Core-to-skin bonding - there are no scratches or missing primer that:

1) Show more than 2.0 square inches (13 square cm) of bare metal at each location.

2) Show more than a cumulative total area of bare metal of 4.0 square inches (26 square cm).

BOEING PROPRIETARY - Copyright © - Unpublished Work - See title page for details.

3) Are less than 6.0 inches (150 mm) (edge-to-edge) apart.

NOTE: A group of bare metal areas in a 2.0 square inch (13 square cm) area can be specified as one bare metal area. A group must then be 6.0 inches (150 mm) (edge-to-edge) from a different bare area or group.

(2) In these small areas where there is bare metal or missing primer, do the steps that follow:

(a) Clean the bare metal. Refer to SOPM 20-30-03 for the applicable solvents.

(b) Apply adhesive primer to the bare metal as given in par. 15. or par. 17.

(3) If more adhesive primer is damaged or removed than is permitted, then do one of the surface preparations specified in par. 11.

7. Remove the Damage

NOTE: Use a table or special tool to keep the part in the correct shape if you remove large areas of damage.

A. Remove the damaged skin from the repair area.

NOTE: As an alternative, you can do a surface preparation and apply the adhesive primer on the surface before you remove the damage. Make sure that you prepare an area that is larger than the necessary minimum bond area. This will give you a sufficient bond area if the removed damage is larger than the NDI indication.

WARNING: DO NOT USE EQUIPMENT THAT CAN CAUSE AN ARC OR A SPARK IN AN AREA WHERE THE IGNITION OF FUMES IS POSSIBLE. IF YOU DO, AN EXPLOSION CAN BE THE RESULT.

(1) If the aluminum skin is damaged or has disbonded areas, do the procedure that follows:

(a) Cut and remove the damaged skin in the disbonded areas.

(b) Separate the bonded structures (if applicable and necessary). Refer to Fig. 3 for the steps that follow:

1) Make the wedge(s).

2) Use polyester tape to attach an approximately 0.02-0.06 inch (0.5-1.5 mm) thick metal or plastic sheet adjacent to the bonded area.

WARNING: USE DRY ICE OR COMPRESSED CARBON DIOXIDE GAS ONLY IN AN AREA WHERE THERE IS A SATISFACTORY FLOW OF AIR. HIGH LEVELS OF CARBON DIOXIDE CAN CAUSE INJURY. WEAR PROTECTIVE GLOVES. IF DRY ICE TOUCHES YOUR SKIN OR EYES, GET MEDICAL AID IMMEDIATELY.

3) Push the wedge(s) between the bonded structures. Lightly tap the wedge(s) if necessary.

BOEING PROPRIETARY - Copyright © - Unpublished Work - See title page for details.

a) If problems occur, you can apply heat, dry ice (solid carbon dioxide), compressed carbon dioxide gas, or liquid nitrogen to the bond area. This will make the adhesive resin brittle and easier to separate.

NOTE: For best results, keep the temperature at less than 260°F (127°C) if you use heat to remove skin.

(c) Do a check to see if the bond is weak along the perimeter of the area to be repaired.

NOTE: Instrumented Non-destructive Inspection (NDI) procedures will not always find a bond that is weak but not broken.

1) Pull carefully on the edge of the skin to see if the bond will break.

2) If the bond is easily broken, then continue to remove the skin until the bonds are not easily broken.

(2) Remove all the nicks, scratches, gouges, burrs, sharp edges, corrosion and other unwanted material to a smooth surface. If you remove more than 10% of a sheet thickness, do one of the steps that follow:

(a) If the depth of the removed damage is less than 80% of the sheet thickness, refer to 51-40-22.

(b) If the depth of the removed damage is more than 80% of the sheet thickness, cut out the damage. Refer to 51-40-24.

NOTE: A facesheet (skin) can have more than one sheet bonded together. Be careful not to cause damage to the sheet(s) below the damaged sheet(s).

(3) Examine the damaged area for signs of water, oil, fuel, dirt or other contamination in the honeycomb. Remove all fluids, dirt and other contamination.

(a) Use a vacuum or oil-free compressed air to remove water.

(b) Dry the honeycomb core. You can heat the core or use hot air at the wet area for 1 hour (minimum) at 150°F (77°C). Make sure that the temperature does not increase more than 5°F (3°C) a minute. Dry again if necessary.

WARNING: DO NOT GET SOLVENTS IN YOUR MOUTH, YOUR EYES, OR ON YOUR SKIN. DO NOT BREATHE THE FUMES FROM SOLVENTS. SOLVENTS ARE DANGEROUS MATERIALS. SOLVENTS CAN BE FLAMMABLE OR CAUSE DAMAGE TO THE ENVIRONMENT. REFER TO THE MATERIAL SAFETY DATA SHEETS (MSDS) AND THE LOCAL SAFETY PRECAUTIONS.

(c) If a honeycomb core has oil in it, then spray on MEK, MIBK, MPK, or acetone solvent to remove the contamination. Be careful to prevent damage to the adhesive on the opposite skin. Immediately remove the solvent from the core. Let the core become completely dry.

BOEING PROPRIETARY - Copyright © - Unpublished Work - See title page for details.

(4) If you are repairing a crack you can do a stop-drill procedure or cut out the damage with a 0.25 inch (6 mm) minimum diameter router bit. Refer to 51-10-1, and 51-40-22 for the stop drill procedure.

(5) For small damage that has a 1.0 inch (25 mm) diameter or less, cut out the damage to a circular shape. Then put BMS 5-28 Type 6 or 7 potting compound or BMS 5-101 Type III liquid pourcoat adhesive in the hole. Refer to Table 3 and 51-40-22.

B. If the aluminum honeycomb core is damaged, do one of the procedures that follow:

NOTE: If the opposite skin is not damaged, be careful to not cut into the opposite aluminum skin. Also, do not cause the bond area to get hot when you use the router.

(1) Full depth core damage:

(a) Remove all of the damaged core.

(b) Lightly abrade the adhesive surface at the bottom of the hole (where the core was).

NOTE: It is not necessary to remove all of the adhesive from the opposite facesheet unless it is in an unsatisfactory condition. The adhesive is unsatisfactory if it has damage from water or other fluids, or if bare metal shows.

(c) Use a vacuum cleaning device to remove dust and particles of the core from the adhesive surface.

(2) For core damage of partial depth, use a septum. See 51-40-23 for repairs that use a septum.

C. Make all the corners of large cutouts in skins and honeycomb sandwich facesheets a minimum of 1.0 inch (25 mm) radius.

D. If you removed skin from above an open core (no core replacement), use a vacuum to remove dust and particles from the open core.

E. Refer to the component engineering drawings or use NDI procedures to find the locations of internal doublers and other repairs. Refer to 51-40-24 for the doubler thicknesses and overlaps to use when cutouts are near a panel edgeband.

8. Make the repair parts

WARNING: USE ONLY EXPLOSION-PROOF EQUIPMENT WHEN YOU DO THESE TYPES OF REPAIRS. IF YOU DO NOT, PERSONAL INJURY AND DAMAGE TO ADJACENT EQUIPMENT CAN BE THE RESULT. WHEN YOU WORK WITH FLAMABLE MATERIALS, HEAT, FIRE OR SPARKS CAN CAUSE AN EXPLOSION.

A. Make the repair doublers and fillers from material that is the same or an equivalent alloy material and heat treatment as the initial skin. Refer to 51-20-1, for the approved substitution materials.

BOEING PROPRIETARY - Copyright © - Unpublished Work - See title page for details.

(1) Do not make doublers and fillers from 7000 series aluminum that are clad on both sides. You can use clad 7000 series aluminum repair parts that are non-clad on one or both sides.

NOTE: This procedure will only let you bond on a non-clad side of a 7000 series aluminum part. Do not use 7000 series aluminum fillers and internal doublers if a side is clad.

(2) As an alternative to the surface preparation and primer application steps in par. 11. through par. 17., you can make your repair doublers and fillers from pre-primed aluminum (aluminum that has the correct surface preparation and adhesive primer on it).

(3) For flush repairs, refer to Fig. 7 for the thickness and dimensions of the repair parts.

(4) For external doubler (non-flush) repairs, refer to Fig. 8 for the thickness and dimensions of the repair parts. Make a chamfer around the edges of external repair doublers that are 0.032 or thicker gage. Refer to Fig. 12.

(5) Remove all the nicks, scratches, gouges, burrs, sharp edges, and other unwanted material from the repair doublers and fillers.

B. If a core repair plug is necessary, do the steps that follow:

(1) Use the same Boeing Material Specification (BMS) material or equivalent BMS-type and alloy as the initial core material.

NOTE: You can increase the durability of the repair if you purchase and use core that is phosphoric acid anodized (BMS 4-4 Class NPA, for example).

(a) You can use the same grade or a one grade higher density core than the initial core material.

(b) If necessary, you can make a full depth core from two pieces that are less than full depth. Refer to 51-40-23 for a repair that uses a septum to make a full depth core from two pieces.

(c) If necessary, you can make a partial depth core if you use a septum. Refer to 51-40-23 for a repair that uses a septum to make a partial depth core.

(2) Make the repair core so that it has the same shape and ribbon direction as the initial core. Make the core so that it will fill the hole. Refer to Fig. 9.

(3) Put the repair core into the hole.

(4) Measure the gap between the outer edges of the initial core and the repair core. Make sure that the gap is less than 0.1 inch (2.5 mm). If the gap is too large, then make another repair core that has the correct fit.

(5) If necessary, cut or abrade the top of the core plug until the core height is –0.00 to +0.005 inch (–0.00 to +0.13 mm) above:

(a) The surface of the adjacent core (when the skin has been removed from above an area of core that will not be replaced), or

BOEING PROPRIETARY - Copyright © - Unpublished Work - See title page for details.

(b) The undamaged skin (when the edge the undamaged core is adjacent to the edge of the undamaged skin).

NOTE: The repair core will compress and move down during the cure.

(6) Carefully remove the repair core plug from the hole.

(7) Remove all the burrs and other unwanted material from the repair core.

(8) Use a vacuum cleaning device to remove all the dust and particles from the repair core.

WARNING: DO NOT GET SOLVENTS IN YOUR MOUTH, YOUR EYES, OR ON YOUR SKIN. DO NOT BREATHE THE FUMES FROM SOLVENTS. SOLVENTS ARE DANGEROUS MATERIALS. SOLVENTS CAN BE FLAMMABLE OR CAUSE DAMAGE TO THE ENVIRONMENT. REFER TO THE MATERIAL SAFETY DATA SHEETS (MSDS) AND THE LOCAL SAFETY PRECAUTIONS.

C. Clean the repair doublers and fillers that do not have primer applied to the surface.

D. Clean the aluminum honeycomb repair core, if used. Make sure that all unwanted materials are removed. Do a vapor de-grease as given in SOPM 20-30-03 or flush the honeycomb core with Series 97 solvent as given in SOPM 20-30-97.

NOTE: To flush the core with solvent, put the core fully into the solvent and leave it for a minimum of 30 seconds. Remove it and let it dry fully. The time to dry fully is approximately 1 hour.

E. Prepare the core mating surfaces.

(1) Abrade the adhesive layer at the bottom of the hole in the initial core to make the surface rough. Use Scotch Brite, Type A, No. 180 or finer pads (or the equivalent).

NOTE: If the adhesive is damaged, then look to see if the adhesive primer is also damaged. Refer to par. 6.B.

(2) Clean the mating surfaces of the initial core, repair core, and the facesheet at the bottom of the hole with a cleaning solvent. Refer to SOPM 20-30-03 for the applicable solvents.

(3) Continue to clean the surfaces until a new moist cloth is clean after it is used. Remove the solvent before it can dry.

(4) Do an inspection of the cleaned repair area. The area must show no signs of a glossy surface.

9. Installation of the Honeycomb Repair Core

A. If you do the one-stage cure repair, then do a surface preparation as specified in par. 11. Then come back to this step and do the honeycomb installation procedure.

NOTE: The steps that follow are applicable for the one-stage and the two-stage cure procedures.

BOEING PROPRIETARY - Copyright © - Unpublished Work - See title page for details.

B. If you cut out damage through the top and bottom facesheets, then put the repair doubler(s) and filler(s) on one of the facesheets before you install the core. Refer to Fig. 7 and Fig. 8.

NOTE: If you are doing a core repair that is less than full depth, or if you make a thick core from two thin cores, then use a septum. Refer to 51-40-23 for septumized core repairs.

C. To bond the repair core mating surfaces, you can use foaming adhesive, two-part paste adhesive, or potting compound. Refer to Table 3 for data on the adhesive materials.

NOTE: Before you open the film adhesive or a foaming adhesive container, let the adhesive stay at a temperature of 60°F to 80°F (16°C to 26°C). You can use the adhesive after there is no condensation.

RESIN TYPE (RESIN USE)	POT LIFE	CURE TIME	CURE TEMPERATURE
BMS 5-28, Type 6 or 7 (Potting Compound)	1 hour	1.5 hours	250° to 260° F (121° to 127° C)
BMS 5-90, Type III, Class 250 (Foaming Adhesive)	Not Applicable	1.5 hours	225° to 260° F (107° to 127° C)
BMS 5-92, Type I, or V (Two-part Paste Adhesive)	Refer to Fig. 10	Refer to Fig. 10	Refer to Fig. 10
BMS 5-101, Type III (Liquid Pour Coat Adhesive)	Not Applicable	1.5 hours	225° to 260° F (107° to 127° C)
BMS 5-141 (Two-Part Paste Adhesive)	1 hour (Minimum)	Refer to Fig. 11	Refer to Fig. 11

Cure Instructions for the Adhesives and Potting Compounds to Make a Core Repair
Table 3:

D. To bond the core to the facesheet or repair doubler, you can use a film adhesive or a two-part paste adhesive. Refer to par. 18. or par. 19. for data on the adhesive materials.

E. Core Installation Options.

(1) The procedure in par. 9.F.(1) shows how to install the repair core with film adhesive, and BMS 5-90, Type III, Class 1, Grade 50 or 100 foaming adhesive.

(2) The procedure in par. 9.F.(2) shows how to install the repair core with BMS 5-101, Type II, film adhesive, and BMS 5-28 Type 6 of 7 potting compound.

(3) The procedure in par. 9.F.(3) shows how to install the repair core with BMS 5-92 or BMS 5-141 two-part paste adhesive.

(4) The procedure in par. 9.F.(4) shows how to seal a square edge with BMS 5-101, Type III liquid pourcoat adhesive.

F. Core installation procedures.

BOEING PROPRIETARY - Copyright © - Unpublished Work - See title page for details.

(1) Foaming adhesive core splice procedure. Do the steps that follow to install a repair core with film adhesive, and with BMS 5-90, Type III, Class 1, Grade 50 foaming adhesive.

(a) Prepare the facesheet before you bond the core.

1) Use one of the film adhesive types that follow:

* three plies of BMS 5-101, Type II, Grade 5, or
* two plies of BMS 5-101, Type II, Grade 10, or
* one ply of BMS 5-101, Type II, Grade 15

2) Cut the film adhesive to the same dimensions as the bottom surface of the repair core.

3) Put the ply (or plies) of film adhesive at the bottom of the hole in the initial core.

a) Remove the separator sheet from each film adhesive ply.

b) If one-side tacky (OST) adhesive is used, (adhesive that has the mat carrier cloth on one of the outer surfaces), put the non-tacky (cloth) side against the bottom of the repair core.

4) Push the adhesive smoothly and tightly in place. Do not trap air between the adhesive plies and the skin or repair doubler at the bottom of the hole.

(b) Cut a piece of BMS 5-90, Type III or IV Class 1, Grade 50 or Grade 100 foaming adhesive.

NOTE: BMS 5-90 Type IV extrudable adhesive is an alternative that can be used in a pressurized autoclave.

1) Cut the adhesive to a sufficient length to wind fully around the inner cell wall splicesurfaces (of the hole in the initial core).

NOTE: Cut the BMS 5-90, Type III, foaming adhesive to make each end attach in a butt-joint. You are also permitted to have a maximum 1/8 inch (3 mm) overlap.

2) If the adhesive has a separator sheet on each side, then remove one of them now. Keep the tacky side against the cell walls in the hole.

3) Wind the foaming adhesive around the inside of the hole in the initial core. Make sure that the adhesive touches all of the core splice surfaces.

4) Remove the separator sheet from the open side of the adhesive.

NOTE: The adhesive must fill a minimum of 3/4 of the clearance between the initial core and the repair core. If necessary, you can apply more than one layer of the BMS 5-90 adhesive material to the repair core.

BOEING PROPRIETARY - Copyright © - Unpublished Work - See title page for details.

(c) Align the ribbon direction of the repair core in the same direction as the core to be repaired. Put the repair core inside the hole.

NOTE: The maximum error permitted is ±5 degrees in the vertical direction and the ribbon direction. See Fig. 9.

1) Make sure that the repair core plug is pushed into the adhesive at the bottom of the hole.

(2) Potting compound core splice procedure. Do the steps that follow to install a repair core with the adhesive film and BMS 5-28, Type 6 or 7 potting compound.

(a) Prepare the facesheet for bonding the core.

1) Use one of the film adhesive types that follow:

* three plies of BMS 5-101, Type II, Grade 5, or
* two plies of BMS 5-101, Type II, Grade 10, or
* one ply of BMS 5-101, Type II, Grade 15.

2) Cut the film adhesive to the same dimension as the bottom surface of the repair core.

3) Put the ply (or plies) of film adhesive at the bottom of the hole in the initial core.

a) Remove the separator sheet from each film adhesive ply.

b) If one-side tacky (OST) adhesive is used, (adhesive that has the mat carrier cloth on one of the outer surfaces), put the non-tacky (cloth) side against the bottom of the repair core.

(b) Apply a sufficient quantity of BMS 5-28, Type 6 or 7 potting compound to the mating sides of the initial and repair cores. The potting compound must fill all of the area between the repair core and the core to be repaired.

(c) Align the ribbon direction of the repair core in the same direction as the core to be repaired. Put the repair core inside the hole.

NOTE: The maximum error permitted is ±5 degrees in the vertical direction and the ribbon direction. See Fig. 9.

1) Make sure that the repair core has a tight interference in the core hole.

2) Make sure that the repair core plug is pushed into the adhesive at the bottom of the hole.

(3) Paste adhesive core splice and core to skin bond procedure. Do the steps that follow to install a repair core with BMS 5-92, Type I or V, or BMS 5-141 two-part paste adhesive.

(a) The edges of the repair core must be a minimum of 2.0 inches (50 mm) from attached fittings. The repair core must also be a minimum of 2.0 inches (50 mm) from the outer edges of the initial core.

BOEING PROPRIETARY - Copyright © - Unpublished Work - See title page for details.

(b) Prepare the facesheet for bonding the core. Apply a 0.04 to 0.08 inch (1.0 to 2.0 mm) thick layer of adhesive to the first surface that the core will be bonded to.

NOTE: Example: at the bottom of the hole in the initial core. As an alternative, you can wet two plies of BMS 9-3 Type H-2 or H-3 dry glass fabric with the paste adhesive and put them in the bottom of the hole.

(c) Apply a sufficient quantity of adhesive to the mating sides of the initial and repair cores. The adhesive thickness must fill all of the area between the repair core and the core to be repaired.

(d) Align the ribbon direction of the repair core in the same direction as the core to be repaired. Put the repair core into the core hole.

NOTE: The maximum error permitted is ±5 degrees in the vertical direction and the ribbon direction. See Fig. 9.

1) Make sure that the repair core has a tight interference in the core hole.

2) Make sure that the repair core plug is pushed into the adhesive at the bottom of the hole.

(4) Seal procedure for a square edge panel assembly.

NOTE: 51-40-24, Fig. 2 shows examples of square edges of honeycomb core that are sealed.

(a) If PAA core is used, you can put BMS 5-95 sealant on the open edges after the repair to the honeycomb panel is completed.

(b) On bare aluminum core, apply BMS 5-101, Type III, liquid pourcoat adhesive to seal the square edge. Do what follows:

1) Clean the repair core again.

2) Measure 3 to 6 core cells in from the perimeter edge of the repair core. Apply the BMS 5-101, Type III liquid pourcoat adhesive on the applicable cells of the repair core. You can dip the core cells into the adhesive or pour the adhesive on to the core cells.

NOTE: If you use the pour procedure, apply the adhesive to one side of the repair core first. Turn the core over and apply other side. Make sure that the adhesive fully covers the cell walls.

3) Put the repair core on clean, absorbent, oil-free paper.

NOTE: After the adhesive is applied, you have less than 3 minutes to drain the extra liquid adhesive from the cells.

a) If there is too much liquid adhesive in the core cells, let the extra adhesive drain away.

BOEING PROPRIETARY - Copyright © - Unpublished Work - See title page for details.

b) After the extra liquid adhesive has drained away, put the repair core on another clean oil-free paper to help the extra liquid adhesive continue to drain.

4) Let the repair core air-dry at ambient temperature on a clean oil-free paper for 30 to 40 minutes.

5) After the air dry time, oven dry the BMS 5-101, Type III at 180°F to 190°F (82°C to 88°C) for 30 to 35 minutes before you install the repair core.

NOTE: Protect the core from contamination.

G. Two-stage honeycomb core cure repair procedure. Refer to Fig. 9 for the steps that follow:

NOTE: If you do a one-stage honeycomb core cure repair procedure, then the steps that follow are not necessary.

(1) Bagging procedure:

(a) Put thermocouples at the edges and bottom of the core.

(b) Find a heat blanket that is larger, than the replacement core.

1) The heat blanket must be sufficient to extend 2.0 inches (50 mm) or more, from the edges of the replacement core.

2) Use the dimensions of the blanket to find the correct dimensions of the layup and vacuum bag materials.

(c) Cut a layer of perforated FEP release film to the same dimensions as the heat blanket. Put the release film on the open replacement core. Make sure that the edges of the release film are an equal distance from the edges of the replacement core.

(d) Cut a layer of dry peel ply or fiberglass bleeder material that is 2.0 inches (50 mm) larger, all around, than the dimensions of the heat blanket. Put the peel ply (or bleeder) on the perforated FEP. Make sure that the edges of the peel ply (bleeder) extend 2.0 inches (50 mm) from the edges of the FEP.

(e) Cut a layer of solid FEP release film, to the same dimension as the heat blanket. Put the release film on the peel ply (bleeder). Make sure that the edges of the release film are an equal distance from the edges of the dry peel ply (bleeder).

(f) Cut a layer of dry peel ply material that is 2.0 inches (50 mm) larger, all around, than the dimensions of the heat blanket. Put the peel ply on the solid FEP. Make sure that the edges of the peel ply extend 2.0 inches (50 mm) from the edges of the FEP.

(g) Put the heat blanket on the peel ply. Make sure that the edges of the heat blanket are an equal distance from the edges of the peel ply.

(h) You can put a thermocouple on the heat blanket (optional). If the heat blanket gets too hot, you can turn off the power before you damage the skin panel.

BOEING PROPRIETARY - Copyright © - Unpublished Work - See title page for details.

(i) If the heat blanket extends more than 3.0 inches (75 mm) from the edge of the cutout, you can do this recommended procedure:

NOTE: If a heat blanket gets too hot, it can cause damage to the repair and to the adhesive in the undamaged skin. To help prevent damage (if the heat blanket gets too hot), do not let the heat blanket touch more skin than is necessary. Insulation between the heat blanket and the skin is recommended.

1) Put the edge of the insulation 2.0 to 3.0 inches (50 to 75 mm) from the edge of the cutout in the top facesheet.

2) Let the insulation material extend to the end of the heat blanket (at a minimum).

(j) Put four to six layers of glass fabric (or two layers of 0.04 inch (1.0 mm) breather fabric, or one layer of 0.1 inch (2.5 mm) breather fabric) above the heat blanket as a breather. Make sure that the breather is sufficient to extend from the edges of the heat blanket.

(k) Put a vacuum base above the fiberglass breather cloth for each vacuum port and vacuum gage port.

(l) Put on the vacuum bag sealant.

(m) Make a hole in the outer vacuum bag at the vacuum base location for each vacuum port and vacuum gage port.

(n) Put the vacuum bag film on the repair area.

(o) Connect the vacuum port and vacuum gage ports to their vacuum bases.

(p) If necessary, put insulation material on the outer surface of the vacuum bag.

(2) Cure the repair.

(a) Refer to Table 3 for the cure instructions.

(b) When the cure time is completed, decrease the temperature at a rate of 5°F (3°C) a minute.

(3) When the temperature is less than 125°F (52°C), release the vacuum pressure and remove the vacuum bag equipment.

(4) Remove the thermocouple wires from the repair area.

NOTE: Part of the thermocouple wires can stay in the cured adhesive if you cannot remove them. Cut the thermocouple wires so that the ends of the wires are below the surface of the core.

(5) Abrade the top of the core until it is flush with the top of the adjacent core or skin (that which applies). Refer to Fig. 9.

BOEING PROPRIETARY - Copyright © - Unpublished Work - See title page for details.

(6) Use a vacuum cleaning device to remove dust and particles from the open core and the repair area.

(7) Do a visual inspection of the core splice. If you see areas that are not bonded, then fill the voids with a core splice adhesive or potting compound. Measure the length of the filled areas.

(a) If the total cumulative length of the filled areas is more than 2.0 inches (50 mm), then cure the core splice material and do par. 9.G.(5) through par. 9.G.(7) again.

(b) If the total cumulative length of the filled areas is 2.0 inches (50 mm) or less, then do all of the applicable steps that remain in this procedure.

10. Inspect the fit of the repair parts

A. See if light finger pressure can make all the areas of the repair part touch the surface to be bonded.

B. Examine and measure the bondline for all repair doublers that have an area of 64 square inches (410 square cm) or more.

(1) The verifilm test is a satisfactory procedure to make sure that you have the permitted bondline thickness. Other procedures are permitted if you can make sure that the bondline thickness is satisfactory.

(2) Make sure that you have a bondline thickness of between 0.002 and 0.020 inch (0.05 to 0.50 mm).

C. If you do a verifilm test, do the steps that follow:

(1) Put a ply of 0.001 or 0.002 inch (0.025 or 0.050 mm) non-perforated FEP release film above the repair area.

NOTE: If there is open honeycomb core, use 0.004-0.007 inch (0.10 to 0.18 mm) thick PVC film. You can use a different material if:

* It does not cause contamination of the core, and
* It will let the honeycomb pattern (from the honeycomb core) show on the adhesive.

(2) Put on to the release film the same adhesive type that you use to do the repair.

NOTE: If a paste adhesive is used, make sure that you apply the adhesive at a constant thickness. If a film adhesive is used, make sure that you use the same number of plies and the same grade that you use in the repair.

(3) Put a ply of nonperforated FEP release film or PVC film above the adhesive.

(4) Put the repair doublers and fillers on the release film the same as you do for the repair.

BOEING PROPRIETARY - Copyright © - Unpublished Work - See title page for details.

(5) Apply a vacuum bag and cure the adhesive as specified in par. 18. You are permitted to cure the adhesive for half of the time specified for the repair.

(6) After the verifilm check is completed, disassemble the parts and do a visual inspection of the cured adhesive.

(a) The adhesive must be between 0.002 inches (0.05 mm) and 0.020 inch (0.50 mm) thick.

(b) Make sure that the parts did not move during the cure.

(c) Make the sure that there are no voids that are larger than 0.10 inch (2.5 mm) in diameter.

(d) If there is open honeycomb core, make sure that you can clearly see the honeycomb pattern on the adhesive for all of the open core. Make sure that the core is not crushed.

(7) If the test is satisfactory, then discard the cured adhesive and the used release film materials. If the test is not satisfactory, then do one or more of the steps that follow:

(a) Repeat the verifilm test with an additional ply of Grade 5 or 10 film adhesive. If the test is satisfactory, make sure that you use the same number of plies of adhesive and the same grades when you do the repair.

(b) Repeat the verifilm test with weight or pressure added. If the test is satisfactory, make sure that you use the same weight or pressure when you do the repair.

(c) Check the shape and fit-up of the repair parts. Adjust if necessary, and then repeat the verifilm test.

(d) Ask Boeing for help if necessary.

D. Apply the adhesive as given in par. 18. or par. 19.

11. Use of the Surface Preparation Procedures

CAUTION: DO NOT BOND A CLAD SURFACE OF A CLAD 7000 SERIES ALUMINUM PART. THE RESULT CAN BE CORROSION AT THE BOND INTERFACE OF THE REPAIR.

A. Do a surface preparation procedure only on aluminum surfaces that are not primed. Remove all unwanted primer and other material before you continue with the procedure.

B. Refer to Fig. 1 for the permitted repair size limit for each surface preparation procedure.

NOTE: These procedures prepare the aluminum surfaces for metal-to-metal bonding and bonding metal face sheets to aluminum honeycomb core.

C. Phosphoric Acid Anodized (PAA) aluminum gives the best surface preparation for bonding. You can get PAA repair parts from the list that follows:

(1) Purchase parts that come with the PAA surface and the adhesive primer on them.

BOEING PROPRIETARY - Copyright © - Unpublished Work - See title page for details.

(2) Do a tank PAA procedure as specified in Boeing Process Specification BAC 5555 "Phosphoric Acid Anodizing of Aluminum for Structural Bonding".

(3) Do the PACS or PANTA surface preparation procedure.

D. The PACS and PANTA procedures are PAA alternatives to tank PAA procedures to prepare an aluminum surface for bonding.

E. As an alternative to the PANTA or PACS procedures, you can use the Boegel (AC-130) procedure.

F. The HF - Alodine procedure can only be used for small, interim repairs.

12. The Phosphoric Acid Containment System (PACS) Procedure

NOTE: The Phosphoric Acid Containment System (PACS) procedure is covered by U.S. patent numbers 4,882,016 and 4,988,414 and other patent applications assigned to The Boeing Company. Repair stations that have Boeing licenses and operators of Boeing aircraft are permitted to use this procedure. For data regarding licensing for non-Boeing applications, call the Chief Patent Counsel, The Boeing Company.

A. The necessary PACS materials are:

(1) Phosphoric Acid, 75-80% (by weight), as given in Federal Specification A-A-55820

(2) Copper Wire

(3) Corrosion Resistant Steel (300 Series CRES) Wire Mesh

(4) DC Power Supply

(5) Vacuum Sealing Compound

(6) Nylon Vacuum Bag Film

(7) Solvent and Acid Resistant Tape

(8) 3M Scotch Brite Pads, Type A, Very Fine

(9) Fiberglass Breather Cloth

(10) Nylon Breather Material (11) Aluminum Foil Tape

(12) Solid FEP

(13) Blue Litmus Paper

(14) Acetone or Methyl Propyl Ketone (MPK) Solvent

(15) BMS 5-89 Adhesive Primer

BOEING PROPRIETARY - Copyright © - Unpublished Work - See title page for details.

(16) Plastic Film (Mylar, acetate, polyester or equivalent plastic material)

WARNING: KEEP ACIDS AWAY FROM HEAT, FIRE, AND SPARKS. ACID FUMES ARE FLAMMABLE AND TOXIC. INJURY TO PERSONNEL CAN BE THE RESULT. DO NOT PERMIT ACIDS TO MIX WITH OTHER MATERIALS. MAKE SURE THAT THE AIR SUPPLY TO THE AREA IS NOT BLOCKED.

USE RUBBER GLOVES, PROTECTIVE CLOTHING AND EYE PROTECTION WHEN YOU WORK WITH PHOSPHORIC ACID. THE ACID CAN BURN YOUR EYES AND SKIN AND CAUSE INJURY. IF THE ACID TOUCHES THESE AREAS, FLUSH WITH A LARGE QUANTITY OF WATER AND GET MEDICAL AID IMMEDIATELY.

B. Make the phosphoric acid solution.

(1) Calculate how much solution is necessary.

NOTE: In this step, you have a minimum of two times as much solution than is needed for the anodize process. This is because it is necessary to have sufficient solution on the area to be anodized:

* During the time needed to get the specified voltage, and
* To make sure that the solution flows for a minimum of 20 minutes.

(a) Make sure that a minimum of 1.0 gallon (4.0 liters) of phosphoric acid solution for each 100 square inches (645 square cm) of treatment area is prepared and connected.

(b) As an alternative, you can circulate the acid and use it two times on the bond surface. Start with a minimum of 1/2 gallon (2.0 liters) of solution for each 100 square inches (645 square cm) of treatment area.

WARNING: ALWAYS ADD ACID TO WATER WHEN YOU MIX THEM. IF YOU ADD WATER TO ACID, THE ACID WILL BECOME VERY HOT AND WILL NOT BE STABLE. THIS CAN CAUSE INJURY TO PERSONS.

(2) To make the phosphoric acid solution, add 14 ± 1/3 fluid ounces (410± 10 ml) of 75-80% phosphoric acid to each 135 ± 2 fluid ounces (4.0 liters ± 60 ml) of distilled water.

C. Clean and abrade the repair surfaces.

WARNING: DO NOT GET SOLVENTS IN YOUR MOUTH, YOUR EYES, OR ON YOUR SKIN. DO NOT BREATHE THE FUMES FROM SOLVENTS. SOLVENTS ARE DANGEROUS MATERIALS. SOLVENTS CAN BE FLAMMABLE OR CAUSE DAMAGE TO THE ENVIRONMENT. REFER TO THE MATERIAL SAFETY DATA SHEETS (MSDS) AND THE LOCAL SAFETY PRECAUTIONS.

(1) Do a solvent wipe with MPK or acetone as given in SOPM 20-30-03.

(2) Abrade the surfaces with Scotch Brite, Type A, very fine pads or a high grade alumina sand paper (180-grit or finer). The metal surface will look clean when you finish this step of the process.

BOEING PROPRIETARY - Copyright © - Unpublished Work - See title page for details.

(3) Remove the unwanted abrasive particles from the surface. Use clean, dry air or nitrogen.

(4) Do a solvent wipe with MPK or acetone as given in SOPM 20-30-03.

(5) Isolate the mechanical fasteners and all the areas that are not damaged. Use aluminum foil tape or a combination of aluminum foil tape and polyethylene film (or the equivalent).

(6) Put on a mask to seal all areas where the damage goes through a skin. To make the mask: put aluminum foil tape, solid FEP or other satisfactory material on top of the honeycomb.

NOTE: If you do a one-stage repair, you can temporarily fill the hole before you put on the mask. Example: you can put the honeycomb repair core in the hole (without the core splice adhesive) or you can put in a solid plug.

(7) Flush with clean water. You can also wipe with a clean, wet, lint-free cloth until no residue shows on the cloth.

D. Do a visual inspection for a water-break-free surface.

(1) Flush the surface with clean (mineral-free or de-ionized) water. Do this for 30 seconds or until the surface has a continuous water film on all of the repair area.

NOTE: The preferred water temperature is between 50° and 100 °F (10 ° and 38 °C).

(2) After the flush procedure is completed, the water film on the bond surface must stay continuous for a minimum of 30 seconds.

NOTE: The water surface tension at the edges of an aluminum skin can cause the water film to pull away from the edge a small distance. This condition is permitted unless it is caused by surface contamination or incorrect abrading.

(3) If the film does not stay continuous for a minimum of 30 seconds, do par. 12.C. and par. 12.D. again.

E. Put a layer of plastic film (Mylar, acetate, polyester or an equivalent material) on the bench tops and other work areas. This will help to prevent the contamination of the repair parts.

F. Assemble the PACS immediately after you clean the repair surface. Refer to Fig. 4.

CAUTION: DO NOT USE A STAINLESS STEEL SCREEN IF IT SHOWS CORROSION OR OTHER DETERIORATION. IF YOU DO, IT IS POSSIBLE THAT THERE WILL NOT BE THE NECESSARY AMOUNT OF CURRENT FLOW THROUGH THE SCREEN.

(1) Cut a piece of the stainless steel screen to the shape and dimensions of the surface area to be anodized. Use 300 series alloy CRES with a wire gauge that is a minimum of American Wire Gauge (AWG) #20 (0.03 inch (0.8 mm) diameter) and a maximum of #14 (0.06 inch (1.5 mm) diameter).

NOTE: AWG #18 (0.04 inch (1.0 mm) diameter) is the usual type of stainless steel screen used.

BOEING PROPRIETARY - Copyright © - Unpublished Work - See title page for details.

(2) Make a record of the dimensions of the area to be anodized and do a calculation of the area. This data will be used later to make a calculation of the volume of acid divided by the area that was anodized.

(3) Attach conductive negative (–) cathode wire(s) to the stainless steel screen. Make sure that there is a minimum of one wire for each 30 square inches (200 square cm) of the repair area. Use a sufficient length of wire to prevent tension in the wire between the power supply and the PACS assembly. Put the same space between each of the wires.

NOTE: The negative (–) cathode wire must have a good electrical conductivity with the stainless steel screen. Make sure that the wires and clamps are sufficiently large to transmit the necessary electrical current.

(4) Cut three or four ply layers of non-woven mat breather material. Each layer must be a minimum of 1.0 inch (25 mm) larger than the stainless steel screen (to make sure that the screen will not touch the surface of the part).

(5) Put two layers of the breather material on the area to be anodized. Align each layer with each other. Make sure that the breather material extends 0.5 inch (13 mm) from each edge of the area to be anodized.

NOTE: On repair areas that are vertical or not easy to get to, use tape to attach each breather cloth layer.

CAUTION: MAKE SURE THAT THE STAINLESS STEEL SCREEN AND CATHODE WIRE DOES NOT TOUCH THE ALUMINUM REPAIR SURFACE. THE RESULT CAN BE DAMAGE TO THE PARTS.

(6) Put the screen on the breather material. Make sure that the edges of the screen are 0.5 inch (13 mm) from the edges of the breather material.

(7) Put one or two layers of breather material on the screen. (Two layers above the screen are recommended for areas larger than 64 square inches (410 square cm). Have the edges align with the edges of the breather material below.

(8) Put acid inlet tube(s) between the breather cloth layers at one edge. Do not put the inlet tube on the stainless steel screen. If you use two or more inlet tubes, put the tubes sufficiently far apart to make the surface fully wet.

NOTE: Use two or more acid solution inlet tubes for repair sizes that are larger than 64 square inches (410 square cm). This is necessary to keep the bond surface fully wet during the anodize procedure.

(9) Put the vacuum outlet tube(s) between the breather cloths at the opposite edge. Do not put the outlet tube on the stainless steel screen.

BOEING PROPRIETARY - Copyright © - Unpublished Work - See title page for details.

(10) Apply vacuum sealing compound on the aluminum part 1.0 inch (25 mm) or less from the edges of the breather cloth.

(11) Cut a piece of vacuum bag film that is approximately 5.0 inches (130 mm) larger than the breather cloths. Put it fully around the repair area.

(12) Remove all the wrinkles in the vacuum bag.

(13) Seal the cathode wire(s) and the inlet tube(s).

(14) Connect the outlet tube between the vacuum probe and the catch basin.

(15) Attach the three-way valve to the inlet tube(s).

(a) Turn the valve to the closed position (no flow of water or acid solution).

(b) Connect one valve line to a container with the phosphoric acid solution that you made in par. 12.B.

(c) Connect a second valve line to the water supply.

(16) If the surface to be anodized is vertical or face down, then Boeing recommends that you use two vacuum bags (an inner bag and an outer bag). The outer vacuum bag will contain the acid if there is leakage from the inner vacuum bag. If the surface is face up (as shown in Fig. 4) then the outer vacuum bag is not necessary.

(a) If the outer vacuum bag is necessary, go to par. 12.F.(17).

(b) If the outer vacuum bag will not be used, then do the steps that follow:

1) Start a vacuum in the vacuum bag and seal all the leaks.

NOTE: The vacuum is through the drain line from the catch basin to the outlet tube.

2) Go to par. 12.F.(18).

(17) When you use two vacuum bags, do the steps that follow:

(a) Put a minimum of four continuous plies of fiberglass breather cloth around the inner vacuum bag.

(b) Put a vacuum base above the fiberglass breather cloth.

(c) Cut a second piece of vacuum bag film for the outer vacuum bag. Make sure that it is larger than the inner bag and fiberglass breather cloth.

(d) Put the outer vacuum bag above the fiberglass breather cloth and the inner bag layup. Seal it to the metal surface. Make sure that the outer bag is sealed. Remove all the wrinkles.

NOTE: Make sure that the cathode wire, inlet tube(s), and outlet tube(s) go below the outer bag. Seal it at the edge of the bag.

BOEING PROPRIETARY - Copyright © - Unpublished Work - See title page for details.

(e) Make a hole in the outer vacuum bag at the vacuum base location for the vacuum port.

(f) Connect the vacuum port and vacuum gage port to the vacuum base.

(g) Start a vacuum in the inner bag and seal all the leaks.

NOTE: The vacuum is through the drain line from the catch basin to the outlet tube.

(h) Start a vacuum in the outer bag and seal all the leaks.

NOTE: The vacuum in the outer bag will hold the inner bag and the parts in their positions.

(18) Connect the wires to a DC power supply.

NOTE: Use a battery or a DC power supply as the power source for the anodizing procedure. The power source must have a capacity of 10 volts, minimum. The power source must also have a capacity of 8 amps/square foot (86 amps/square meter), minimum.

(a) Connect the negative (-) cathode wire that is attached to the stainless steel screen, to the negative lead on the power source.

(b) Connect the positive (+) anode wire to the aluminum part surface to be anodized, and to the positive (+) lead on the power source.

G. Do the PACS anodize procedure.

(1) Before you let the acid solution flow:

(a) Make a record of the initial quantity (in fluid ounces or liters, as applicable) of the acid in the container.

NOTE: This record will be necessary for the calculation in par. 12.G.(9)(a).

(b) If you recycle the acid solution, you must have a procedure to measure or calculate the total quantity of solution that flowed on the bond surface.

(2) Make sure that the temperature of the acid and aluminum part stays between 70° and 85° F (21° and 29° C) during the anodizing procedure.

(3) Open the three-way valve to let the phosphoric acid solution flow from its container to the inner vacuum bag.

(a) Let a sufficient quantity of acid to flow in until the non-woven mat breather material becomes soaked. Make sure that you keep a sufficient and continuous acid solution flow rate.

BOEING PROPRIETARY - Copyright © - Unpublished Work - See title page for details.

(b) Use a minimum of 0.03 fluid ounce (1.0 ml) a minute for each square inch (1.5 ml a minute for each 10 square cm) to be anodized. This quantity is necessary to keep the surface fully wet.

(4) Do the steps that follow (as soon as possible) in the sequence that follows:

(a) Set the voltage and current positions to zero on the electrical power supply.

(b) Start the electrical power supply.

(c) Increase the current adjustment to the full open position.

(d) Slowly increase the voltage (approximately 5 volts for each minute) until it is between 9.5 to 10 volts (DC).

(e) Do a check of the amperage after it gets to the correct voltage.

NOTE: A fast increase in the current (more than 20% of the stable value) could be a sign that the surface is burning. Add more acid solution. If this is an unsatisfactory solution, an electrical short could be the cause. Stop the procedure and look for the problem.

1) In one minute or less, the current will become stable.

2) The current density at 9.5 to 10 volts (DC) must be in a range that is between 0.014 and 0.048 amperes/square inches (0.0022 and 0.0074 amperes/square cm).

(f) Apply the 9.5 to 10 volts (DC) for 18 to 22 minutes.

CAUTION: DO NOT LET THE ASSEMBLY BECOME DRY. THE RESULT CAN BE A BURNED SURFACE OR A SURFACE TREATMENT THAT IS UNSATISFACTORY. ADD MORE ACID AS NECESSARY TO KEEP THE SURFACE FULLY WET.

(5) Make sure that there is a steady flow of acid over all of the surface of the part during the anodizing procedure. Signs that the acid flow rate is not sufficient or signs of local dry areas are:

* An increase in current after it has stabilized, or
* A significant increase in temperature, or
* A lightening of the color of the breather cloth.

NOTE: The breather cloth will change to a darker color when it becomes soaked with the phosphoric acid.

(6) Stop the electrical power after the specified anodizing time.

(7) Quickly, make a record of the quantity of phosphoric acid that stays in the container.

NOTE: This record will be necessary for the calculation in par. 12.G.(9)(a).

BOEING PROPRIETARY - Copyright © - Unpublished Work - See title page for details.

(8) Immediately, turn the three-way valve to let the rinse water flow from the container to the inner bag.

(a) Flush with a quantity of water equal to 0.03 fluid ounces (1.0 ml) a minute for each square inch (1.5 ml a minute for each 10 square cm) that was anodized.

(b) The rinse water must flush freely against all of the anodized surface.

(9) Flush the bag with rinse water for a minimum of 5 minutes. Do the steps that follow, while the rinse water flushes the anodized surface:

(a) Calculate the quantity of phosphoric acid that was used.

(b) Subtract the quantity of phosphoric acid (the record you made in par. 12.G.(9)(a)) from the initial quantity (the record you made in par. 12.G.(1)).

(c) Divide the volume of phosphoric acid that was used, by the area that was anodized (Use the data from the record you made in par. 12.F.(2)).

(d) If the calculated quantity of phosphoric acid used is less than 1/3 fluid ounce (10 ml) for each square inch (15 ml for each 10 square cm) of area that was anodized, then do par. 12.G.(1) through par. 12.G.(7) again.

(e) Stop the flow of rinse water if the calculated quantity of phosphoric acid used is sufficient.

H. Quickly, disassemble the PACS layup.

(1) Stop the vacuum and disconnect all of the tubing.

(2) Remove the outer vacuum bag and the fiberglass breather cloth. Be careful to not let contamination or other unwanted material get on the anodized surface.

NOTE: Do not touch the anodized surface with your bare skin or with gloves that have contamination on them. Do not let the adhesive tape touch the anodized surface.

(3) Remove the inner vacuum bag, the breather cloths, and the stainless steel screen layup.

(4) Discard the tape, the inner bag, the breather cloth, and the stainless steel screen in an approved container. Make sure to discard these materials by a procedure that is permitted by local health, safety, and environmental authorities.

I. Flush the anodized surface with clean (mineral-free or de-ionized) water for 5 minutes. This will remove all possible phosphoric acid solution.

NOTE: Do not wipe or rub the repair surfaces.

BOEING PROPRIETARY - Copyright © - Unpublished Work - See title page for details.

J. Let the anodized surface fully dry at room temperature. As an alternative, you can dry the parts with forced, clean, dry, filtered air that is a maximum of 160°F (71°C) until the surface is fully dry.

NOTE: You must apply the adhesive primer in less than 24 hours after the surface is anodized. Prevent the contamination of the anodized surface by moisture, dust, oil fumes, engine exhaust, or other unwanted material. Do not touch the dried anodized surfaces. Do not apply tape to the anodized surfaces.

K. Examine the anodized surface. You can use a Phosphoric Acid Anodize Detector (dichroscope) or do the polarized filter color inspection test that follows:

NOTE: You can purchase a Phosphoric Acid Anodize Detector (part number WCI-AD55) from West Coast Industries, Inc., 14900 Whitman Ave N, Seattle, WA 98133.

(1) Polarized filter color inspection test.

(a) Use a fluorescent light source on the anodized area.

(b) Put a polarizing filter between yourself and the treated surface and look at the reflected light (from the surface) at an angle of 5 degrees or less. It can be helpful to put the light source at a glancing angle. Refer to Fig. 6.

(c) While you look at the surface through the polarizing filter, turn the filter 90 degrees. A correctly anodized surface gives a constant change in color (on all areas of the anodized surface) when you look through the filter. The colors seen most frequently are purple, yellow, and green.

NOTE: It is not easy to see the colors on a rough or contoured surface. To find out if a surface is anodized correctly, change the view angle of the polarizing filter to see if the anodic coating is satisfactory.

(2) The anodize procedure is not successful if you find one or more of the conditions that follow:

(a) There are sudden changes in color as a result of stains, contamination, fingerprints, or other parts that touched the surface.

(b) There are electrical burns or pits.

(c) There are areas of the surface to be bonded that are not anodized.

(3) The surface is fully anodized if you see a constant change in color (with the polarizing filter) on all the areas of the anodized surface.

(4) If the color inspection test on a rough or contoured surface is not successful, you can do alternative tests to make sure you have a good anodized surface. Do one or more of the tests that follow:

(a) Use an ohmmeter to do a resistance test of the anodized surface. Make sure that the ohmmeter probes are clean.

1) Carefully, put the ohmmeter probes on the anodized surface. Make sure that you do not damage the anodized surface with the ohmmeter probes.

BOEING PROPRIETARY - Copyright © - Unpublished Work - See title page for details.

2) Carefully touch the surface with the sides of the probes first, then lay them down. If the surface has a resistance of more than 20,000 ohms (20 kohms) the test is successful.

(b) Do an infrared filter test to measure the weight of the anodize coating. Use an infrared filter device that is tuned to measure phosphoric acid anodize oxides. If the infrared filter test shows an anodized coating that is more than 20mg/square foot (215mg/square Meter), the test is successful.

NOTE: A source for the infrared filter is as follows: Personal Instruments, LLC 18 Commerce Road Newton, CT 06470 (203) 426-0152.

(c) The surface is fully anodized if you see a constant change in color (with the polarizing filter) on 90 percent or more of the anodized surface and one or more of the alternative tests are satisfactory.

(5) If the anodize procedure is not successful, you must do all of the steps in par. 12. again. (You must remove the unsatisfactory anodic oxide by abrasion as given in par. 12.C.).

L. If you put a mask on open honeycomb core during par. 12.C.(6)/REPAIR GENERAL, then remove it now. Make sure that you do not touch or contaminate the surfaces that have been anodized. Do not let moisture get into the core cells.

(1) Do a visual check for moisture in the cells. If you see moisture, use blue litmus paper to make sure that there is no acid contamination.

(a) If the litmus paper changes to a red color, there is acid contamination in the core cells. Flush the core with water. Use more blue litmus paper and do a check for acid again.

(b) If the litmus paper stays blue, there is no acid in the core. Remove the moisture, then continue with the procedure.

(2) Make sure that the core is fully dry before you apply the adhesive primer.

M. Keep the bond surface(s) clean if you cannot apply the adhesive primer immediately.

(1) Do not touch the surface(s) with your bare skin, waxed paper, or material that has a release agent or other contamination.

(2) If protection of the surface(s) is necessary, then put vacuum bag film or unwaxed paper (without ink or other contamination on it) on the bond surface(s).

N. Apply the BMS 5-89 adhesive primer in less than 24 hours after the anodize procedure is completed. Refer to par. 15.

13. The Phosphoric Acid Non-Tank Anodizing (PANTA) Procedure

A. The materials that you need are:

BOEING PROPRIETARY - Copyright © - Unpublished Work - See title page for details.

(1) Phosphoric Acid, 75-80% (by weight), as given in Federal Specification A-A-55820 or (optional) pre-mixed phosphoric acid gel

(2) (Optional) Floculated Silica (Cab-o-Sil, Grade M-5, or PTG)

(3) Copper Wire

(4) Corrosion Resistant Steel (300 Series CRES) Wire Mesh

(5) Gauze or Cheesecloth (Cotton, Clean and lint-free)

(6) DC Power Supply

(7) Solvent and Acid Resistant Tape

(8) 3M Scotch Brite Pads, Type A, Very Fine

(9) Aluminum Foil Tape

(10) Solid FEP

(11) Blue Litmus Paper

(12) Acetone or Methyl Propyl Ketone (MPK) Solvent

(13) BMS 5-89 Adhesive Primer

(14) Plastic Film (Mylar, acetate, polyester or equivalent plastic material)

WARNING: KEEP ACIDS AWAY FROM HEAT, FIRE, AND SPARKS. ACID FUMES ARE FLAMMABLE AND TOXIC. INJURY TO PERSONNEL CAN BE THE RESULT. DO NOT PERMIT ACIDS TO MIX WITH OTHER MATERIALS. MAKE SURE THAT THE AIR SUPPLY TO THE AREA IS NOT BLOCKED.

USE RUBBER GLOVES, PROTECTIVE CLOTHING AND EYE PROTECTION.WHEN YOU WORK WITH PHOSPHORIC ACID. THE ACID CAN BURN YOUR EYES AND SKIN AND CAUSE INJURY. IF THE ACID TOUCHES THESE AREAS, FLUSH WITH A LARGE QUANTITY OF WATER AND GET MEDICAL AID IMMEDIATELY.

B. Make the phosphoric acid solution (or gel).

WARNING: ALWAYS ADD ACID TO WATER WHEN YOU MIX THEM. IF YOU ADD WATER TO ACID, THE ACID WILL BECOME VERY HOT AND WILL NOT BE STABLE. THIS CAN CAUSE INJURY TO PERSONS.

(1) To make the phosphoric acid solution, add 14 ± 1/3 fluid ounces (410± 10 ml) of 75-80% phosphoric acid to each 135 ± 2 fluid ounces (4.0 liters ± 60 ml) of distilled water.

BOEING PROPRIETARY - Copyright © - Unpublished Work - See title page for details.

(2) As an option, you can make the phosphoric acid solution thicker. Mix flocculated silica (Cab-OSil, Grade M-5 or PTG) with the phosphoric acid until the acid solution and silica become a gel.

NOTE: You can also get the phosphoric acid gel mixture from a vender (supplier).

C. Clean and abrade the repair surfaces.

WARNING: DO NOT GET SOLVENTS IN YOUR MOUTH, YOUR EYES, OR ON YOUR SKIN. DO NOT BREATHE THE FUMES FROM SOLVENTS. SOLVENTS ARE DANGEROUS MATERIALS. SOLVENTS CAN BE FLAMMABLE OR CAUSE DAMAGE TO THE ENVIRONMENT. REFER TO THE MATERIAL SAFETY DATA SHEETS (MSDS) AND THE LOCAL SAFETY PRECAUTIONS.

(1) Do a solvent wipe with MPK or acetone as given in SOPM 20-30-03.

(2) Abrade the surfaces with Scotch Brite, Type A, very fine pads or a high grade alumina sand paper (180-grit or finer). The metal surface should look clean when you finish this step of the process.

(3) Remove the unwanted abrasive particles from the surface. Use clean dry air or nitrogen.

(4) Do a solvent wipe with MPK or acetone as given in SOPM 20-30-03.

(5) Isolate the mechanical fasteners and all the areas that are not damaged. Use aluminum foil tape or a combination of aluminum foil tape and polyethylene film (or the equivalent). This will prevent acid contamination.

(6) Put on a mask to seal all areas where the damage goes through a skin. To make the mask, put aluminum foil tape, solid FEP or other satisfactory material on top of the honeycomb.

NOTE: If you do a one-stage repair, make sure that the hole is filled before you put on the mask. Example: you can put the honeycomb repair core in the hole (without the core splice adhesive) or you can put in a solid plug.

(7) Flush with clean water and/or wipe with a clean, wet, lint-free cloth until no visible residue appears on the cloth.

D. Do a visual inspection for a water-break-free surface.

(1) Flush the surface with clean (mineral-free or de-ionized) water. Do this for 30 seconds or until the surface has a continuous water film on all of the repair area.

NOTE: The preferred water temperature is between 50° and 100°F (10° and 38°C).

BOEING PROPRIETARY - Copyright © - Unpublished Work - See title page for details.

(2) After the flush procedure is completed, the water film on the bond surface must stay continuous for a minimum of 30 seconds.

NOTE: The water surface tension at the edges of an aluminum skin can cause the water film to pull away from the edge a small distance. This condition is permitted unless it is caused by visible surface contamination or incorrect abrading.

(3) If the film does not remain continuous for a minimum of 30 seconds, do par. 13.C. and 13.D. again.

E. Put a layer of plastic film (Mylar, acetate, polyester or an equivalent material) on the bench tops and other work areas. This will help to prevent the contamination of the repair parts.

F. Assemble the PANTA system immediately after you clean the repair surfaces. Refer to Fig. 5 when you do the steps that follow:

(1) Make a dam to prevent the acid solution (or gel) and rinse water from going into the adjacent structure. To make the dam, build up aluminum foil, acid resistant tape, solid FEP, or other acceptable material around the surface to be treated.

CAUTION: DO NOT USE A STAINLESS STEEL SCREEN IF IT SHOWS CORROSION OR OTHER DETERIORATION. IF YOU DO, IT IS POSSIBLE THAT THERE WILL NOT BE THE NECESSARY AMOUNT OF CURRENT FLOW THROUGH THE SCREEN.

(2) Cut a piece of the stainless steel screen to the shape and dimensions of the surface area to be treated. Use a 300 series alloy CRES with a wire gauge that is a minimum of American Wire Gauge (AWG) #20 (0.03 inch (0.8 mm) diameter) and a maximum of #14 (0.06 inch (1.5 mm) diameter).

NOTE: AWG #18 (0.04 inch (1.0 mm) diameter) is the usual type of stainless steel screen used.

(3) Set up an acid drain and rinse water recovery basin to hold the waste acid and rinse water after the anodize procedure is completed.

(4) Apply the acid and layup materials.

NOTE: You have 30 minutes maximum after you apply the phosphoric acid to start the anodize procedure.

(a) Make sure the temperature of the aluminum part and the acid solution (or gel) during the anodizing procedure is between 70° and 85° F (21° and 29° C).

(b) Keep the surface wet with acid solution (or gel) at all times. If the surface starts to dry, add more acid solution (or gel).

BOEING PROPRIETARY - Copyright © - Unpublished Work - See title page for details.

WARNING: KEEP ACIDS AWAY FROM HEAT, FIRE, AND SPARKS. ACID FUMES ARE FLAMMABLE AND TOXIC. INJURY TO PERSONNEL CAN BE THE RESULT. DO NOT PERMIT ACIDS TO MIX WITH OTHER MATERIALS. MAKE SURE THAT THE AIR SUPPLY TO THE AREA IS NOT BLOCKED.

USE RUBBER GLOVES, PROTECTIVE CLOTHING AND EYE PROTECTION WHEN YOU WORK WITH PHOSPHORIC ACID. THE ACID CAN BURN YOUR EYES AND SKIN AND CAUSE INJURY. IF THE ACID TOUCHES THESE AREAS, FLUSH WITH A LARGE QUANTITY OF WATER AND GET MEDICAL AID IMMEDIATELY.

(c) Apply a smooth layer of phosphoric acid solution (or gel) to the aluminum surfaces.

(d) Cut a layer of gauze (or the equivalent absorbent, porous material) that is larger than the area to be anodized.

1) Put the gauze on the acid layer. Extend the gauze 0.5 inch (13 mm) minimum, from the edges of the area to be anodized. Do this until two or three layers of the gauze are assembled.

2) Keep the thickness to a minimum to prevent gasses from being trapped (but make sure that there is enough so that the screen will not touch the surface to be anodized).

3) Remove the wrinkles. If necessary you can use a paint brush or a plastic sweeper to make sure the acid fully soaks the gauze.

NOTE: You can pre-soak the gauze. The gauze can be pre-soaked by squeezing the acid gel solution through the gauze by hand. Use rubber gloves for protection.

CAUTION: MAKE SURE THAT THE STAINLESS STEEL SCREEN AND CATHODE WIRE DOES NOT TOUCH THE ALUMINUM REPAIR SURFACE. THE RESULT CAN BE DAMAGE TO THE PARTS.

(e) Put the stainless steel screen on the layers of gauze and acid.

CAUTION: MAKE SURE THAT THE SURFACE OF THE REPAIR AREA IS OPEN TO THE AIR TO PERMIT THE RELEASE OF UNWANTED GASES. IF YOU DO NOT, THE REPAIR WILL BE UNSATISFACTORY.

(f) Add a layer of phosphoric acid solution (or gel) to the stainless steel screen to make sure that the solution fully covers the screen.

(5) Make the electrical connections.

BOEING PROPRIETARY - Copyright © - Unpublished Work - See title page for details.

(a) Attach a conductive negative (–) cathode wire to the stainless steel screen. Make sure that there is a minimum of one wire for each 30 square inches (200 square cm) of the repair area. The length of the wire must be sufficient so that there is no tension between the power supply and the PANTA assembly. The wires must be evenly spaced apart.

NOTE: The negative (–) cathode wire must have a good electrical conductivity with the stainless steel screen. Make sure that the wires and clamps are large enough to carry the necessary electrical current.

(b) Connect the negative (–) cathode wire that is attached to the stainless steel screen to the negative lead on the power source. Connect the positive (+) anode wire to the aluminum part surface to be anodized, and to the positive (+) lead on the power source.

NOTE: Use a battery or a DC power supply as the power source for the anodizing procedure. The power source must have a capacity of 10 volts, minimum. The power source must also have a capacity of 8 amps/square foot (86 amp/square meter), minimum.

CAUTION: DO NOT LET THE ASSEMBLY BECOME DRY. THE RESULT CAN BE A BURNED SURFACE OR A SURFACE TREATMENT THAT IS UNSATISFACTORY. ADD MORE ACID AS NECESSARY TO KEEP THE SURFACE FULLY WET.

G. Do the PANTA procedure.

(1) Do the steps that follow in the sequence that follows:

NOTE: You have less than 30 minutes to start the electricity after you apply the acid.

(a) Set the voltage and current positions to zero on the electrical power supply.

(b) Start the electrical power supply.

(c) Increase the current adjustment to the full open position.

(d) Slowly increase the voltage (approximately 5 volts for each minute) until it is between 9.5 to 10 volts (DC).

(e) Do a check of the amperage after it gets to the correct voltage.

NOTE: A fast increase in the current (more than 20% of the stable value) could be a sign that the surface is burning. Add more acid solution (or gel). If this is an unsatisfactory solution, an electrical short could be the cause. Stop the procedure and look for the problem.

1) In one minute or less, the current will become stable.

2) The current density at 9.5 to 10 volts (DC) must be in a range that is between 0.014 and 0.048 amperes/square inches (0.0022 and 0.0074 amperes/square cm).

BOEING PROPRIETARY - Copyright © - Unpublished Work - See title page for details.

(f) Apply the 9.5 to 10 volts (DC) for 10 to 12 minutes.

CAUTION: DO NOT LET THE ASSEMBLY BECOME DRY. THE RESULT CAN BE A BURNED SURFACE OR A SURFACE TREATMENT THAT IS UNSATISFACTORY. ADD MORE ACID AS NECESSARY TO KEEP THE SURFACE FULLY WET.

(2) Stop the electrical power after the specified time.

(3) Immediately, remove the screen and the gauze breather cloth. Discard these materials. Use a method to discard these materials that is permitted by your local safety, health, and environmental authorities.

(4) Immediately, flush the phosphoric acid from the anodized surfaces with clean water. The time interval between power shut-off and the start of the flush must not be more than 2.5 minutes. Flush with clean (mineral free or de-ionized) water for a minimum of 5 minutes.

NOTE: Do not rub or wipe the repair surface.

H. Let the anodized surface fully dry at room temperature. As an alternative, you can dry the parts with forced, clean, dry, filtered air that is a maximum of 160° F (71° C) until the surface is fully dry.

NOTE: You must apply the adhesive primer in less than 24 hours after the surface is anodized. Prevent the contamination of the anodized surface by moisture, dust, oil fumes, engine exhaust or other unwanted material. Do not touch the dried anodized surfaces. Do not apply tape to the anodized surfaces.

I. Examine the anodized surface. You can use a Phosphoric Acid Anodize Detector (dichroscope) or do the polarized filter color inspection test that follows:

NOTE: You can purchase a Phosphoric Acid Anodize Detector (part number WCI-AD55) from West Coast Industries, Inc., 14900 Whitman Ave N, Seattle, WA 98133.

(1) Polarized filter color inspection test.

(a) Use a fluorescent light source on the anodized area.

(b) Put a polarizing filter between yourself and the treated surface and look at the reflected light (from the surface) at an angle of 5 degrees or less. It can be helpful to put the light source at a glancing angle. Refer to Fig. 6.

(c) While you look at the surface through the polarizing filter, turn the filter 90 degrees. A correctly anodized surface gives a constant change in color (on all areas of the anodized surface) when you look through the filter. The colors seen most frequently are purple, yellow, and green.

NOTE: It is not easy to see the colors on a rough or contoured surface. To find out if a surface is anodized correctly, change the view angle of the polarizing filter to see if the anodic coating is satisfactory.

BOEING PROPRIETARY - Copyright © - Unpublished Work - See title page for details.

(2) The anodize procedure is not successful if you find one or more of the conditions that follow:

(a) There are sudden changes in color as a result of stains, contamination, fingerprints, or other parts that touched the surface.

(b) There are electrical burns or pits.

(c) There are areas of the surface to be bonded that are not anodized.

(3) The surface is fully anodized if you see a constant change in color (with the polarizing filter) on all the areas of the anodized surface.

(4) If the color inspection test on a rough or contoured surface is not successful, you can do alternative tests to make sure you have a good anodized surface. Do one or more of the tests that follow:

(a) Use an ohmmeter to do a resistance test of the anodized surface. Make sure that the ohmmeter probes are clean.

1) Carefully, put the ohmmeter probes on the anodized surface. Make sure that you do not damage the anodized surface with the ohmmeter probes.

2) Carefully touch the surface with the sides of the probes first, then lay them down. If the surface has a resistance of more than 20,000 ohms (20 kohms) the test is successful.

(b) Do an infrared filter test to measure the weight of the anodize coating. Use an infrared filter device that is tuned to measure phosphoric acid anodize oxides. If the infrared filter test shows an anodized coating that is more than 20mg/square foot (215mg/square Meter), the test is successful.

NOTE: A source for the infrared filter is as follows: Personal Instruments, LLC 18 Commerce Road Newton, CT 06470 (203) 426-0152.

(c) The surface is fully anodized if you see a constant change in color (with the polarizing filter) on 90 percent or more of the anodized surface and one or more of the alternative tests are satisfactory.

(5) If the anodize procedure is not successful, you must do all of the steps in par. 13. again. (You must remove the unsatisfactory anodic oxide by abrasion as given in par. 13.C.).

J. If you put a mask on open honeycomb core during par. 13.C.(6), then remove it now. Make sure that you do not touch or contaminate the surfaces that have been anodized. Do not let moisture get into the core cells.

(1) Do a visual check for moisture in the cells. If you see moisture, use blue litmus paper to make sure that there is no acid contamination.

(a) If the litmus paper changes to a red color, there is acid contamination in the core cells. Flush the core with water. Use more blue litmus paper and do a check for acid again.

(b) If the litmus paper stays blue, there is no acid in the core. Remove the moisture, then continue with the procedure.

BOEING PROPRIETARY - Copyright © - Unpublished Work - See title page for details.

(2) Make sure that the core is fully dry before you apply the adhesive primer.

K. Keep the bond surface(s) clean if you cannot apply the adhesive primer immediately.

(1) Do not touch the surface(s) with your bare skin, waxed paper, or material that has a release agent or other contamination.

(2) If protection of the surface(s) is necessary, then put vacuum bag film or unwaxed paper (without ink or other contamination on it) on the bond surface(s).

L. Apply BMS 5-89 adhesive primer in less than 24 hours after the anodize procedure is completed. Refer to par. 15.

14. The Boegel (AC-130) Prebond Treatment Procedure

NOTE: The Boegel (AC-130) Prebond Treatment materials must be purchased from an approved Boeing licensed supplier.

A. The materials that you need are:

(1) AC-130 Sol-Gel Kit (Source: Advanced Chemistry and Technology, 7341 Anaconda Avenue, Garden Grove, CA 92841, 800-732-4470)

(2) Cheesecloth, gauze or clean cotton rags, or BMS 15-5, Class A wipers

(3) Acetone or Methyl Propyl Ketone (MPK) Solvent

(4) BMS 5-89 Type II (BR 6747-1 only) Adhesive Primer

(5) Merit Shur Stik ALO Resin Bond, #180-grit Abrasive Papers (Source: Merit Abrasives, Customer Service, 2770 W. Washington St., Stephenville, TX 76401-3798, Tel: 800 421-1936, Fax: 800 472-3094, website: www.meritabr.com). Refer to Table 4 for product identification.

ALO Resin Bond 180 Grit Sanding Discs				
Disc Diameter	Quick-Change PowerLock Discs			Shur Stik Adhesive Backed Discs
1/2 inch (13 mm)	N/A	N/A	N/A	71108
3/4 inch (19 mm)	61010	65109	64325	71122
1 inch (25 mm)	61023	65124	66252	71137
1 1/2 inches (38 mm)	61036	65139	66251	71152
2 inches (50 mm)	61050	65154	64916	71167
3 inches (75 mm)	61064	65169	66187	71182
4 inches (100 mm)	61078	65184	64843	71197
5 inches (125 mm)	N/A	N/A	N/A	72024
6 inches (150 mm)	N/A	N/A	N/A	72053

Merit Sandpaper Ordering Information
Table 4

BOEING PROPRIETARY - Copyright © - Unpublished Work - See title page for details.

B. Prepare the repair area for the Boegel (AC-130) Prebond Treatment procedure.

WARNING: DO NOT GET SOLVENTS IN YOUR MOUTH, YOUR EYES, OR ON YOUR SKIN. DO NOT BREATHE THE FUMES FROM SOLVENTS. SOLVENTS ARE DANGEROUS MATERIALS. SOLVENTS CAN BE FLAMMABLE OR CAUSE DAMAGE TO THE ENVIRONMENT. REFER TO THE MATERIAL SAFETY DATA SHEETS (MSDS) AND THE LOCAL SAFETY PRECAUTIONS.

(1) Do a solvent wipe with MPK or acetone as given in SOPM 20-30-03.

(2) Abrade the surfaces with Scotch Brite, Type A, very fine pads or a high grade alumina sand paper (180-grit or finer). The metal surface will look clean when you finish this step of the process.

(3) Remove the unwanted abrasive particles from the surface. Use clean dry air or nitrogen.

(4) Do a solvent wipe with MPK or acetone as given in SOPM 20-30-03.

C. Mix the components of kit as given in the manufacturer's instructions. Use a kit size that is the best for the area to be treated. Example: approximately 50 ml of the Boegel (AC-130) solution is satisfactory to treat 200 square inches (1300 square cm) of bond zone. Scale it up if necessary.

(1) 30 minutes after you mix the components, you can apply Boegel (AC130) to the surface to be treated.

NOTE: 30 minutes is the minimum time necessary for the components to react.

(2) Use the mixture after the abrade steps that follow, but not after 10 hours.

CAUTION: USE THE SANDPAPER THAT IS SPECIFIED IN THIS PROCEDURE. SOME TYPES OF SANDPAPER CAN CAUSE A WEAK BOND.

D. Fully abrade the repair area again.

(1) Use a random orbital sander or die grinder.

(a) Make sure that the sander or grinder will not get oil contamination on the sandpaper or the bond surface.

(b) Only use a sander or grinder that has a vented or filtered exhaust for the dust particles.

(2) Use Merit ALO Resin Bond, 180-Grit, alumina sandpaper (Merit Abrasives, 201 W. Manville Street, P.O. Box 5477, Compton, CA 90224-5477).

(3) Abrade for a minimum of 1 minute for each 40 square inches (260 square cm) in area.

(a) Move the sander/grinder in one direction on the panel surface.

BOEING PROPRIETARY - Copyright © - Unpublished Work - See title page for details.

(b) Change the sandpaper after each 30 seconds that you abrade. Change the direction of movement by 90 degrees each time that the sandpaper is changed.

NOTE: This procedure is necessary to remove the metal oxide layer on the aluminum and make the surface reactive for the Boegel (AC-130).

(c) Make sure that all of the repair area is fully abraded, including the edges.

(d) After all of the surface has been abraded, change the sandpaper and fully abrade the surface again. Move the sander in a random direction on all of the panel surface.

NOTE: You can abrade a maximum of 200 square inches (1300 square cm) on the last sheet of sandpaper. Do not abrade the surface for more than 30 seconds.

(4) Example: If you treat a section that is 80 square inches (520 square cm) do the steps that follow:

(a) Abrade the surface in one direction for a minimum of 30 seconds.

(b) Change the sandpaper, and then abrade in a 90 degree direction for a minimum of 30 seconds. Then change the sandpaper again. Repeat this for a total treatment time of 2 minutes, minimum (with 4 sheets of sandpaper).

(c) Then, change the sandpaper and abrade all of the surface for 30 seconds more.

(5) Do a visual inspection. The surface should have a fully abraded appearance. If not, do the abrade steps again.

(6) Remove the loose grit residue with clean, dry compressed nitrogen or air. Keep the surface clean until you apply the Boegel (AC-130) Solution.

(7) Apply the Boegel (AC-130) solution in less than 30 minutes after you complete the abrade steps.

NOTE: After 30 minutes the surface will begin to oxidize. Then you will need to do the abrade steps again to remove the oxide layer.

WARNING: DO NOT PERMIT THE BOEGEL (AC-130) SOLUTION TO TOUCH YOUR FACE OR EYES. USE APPROVED PROTECTION PROCEDURES. IF THE SOLUTION TOUCHES THESE AREAS, IRRITATION TO THE EYES AND SKIN CAN OCCUR.

E. Apply the Boegel (AC-130) solution.

(1) Put on a mask to seal all areas where the damage goes through a skin. To make the mask, put aluminum foil tape, solid FEP or other satisfactory material on top of the honeycomb.

NOTE: If you do a one-stage repair, make sure that the hole is filled before you put on the mask. Example: you can put the honeycomb repair core in the hole (without the core splice adhesive) or you can put in a solid plug.

BOEING PROPRIETARY - Copyright © - Unpublished Work - See title page for details.

(2) Isolate the mechanical fasteners and all the other areas that are not damaged. Use aluminum foil tape or a combination of aluminum foil tape and polyethylene film (or the equivalent). This will prevent contamination.

(3) Make sure that the temperature of the Boegel and aluminum part stays between 50° and 100° F (10° and 38° C) during the procedure.

(4) Apply the solution to the bond surface to be treated with a clean, natural (non-metallic) bristle brush or with a sprayer.

(5) Apply a sufficient quantity of solution to cause the solution to drain from the bond surface. Keep the bond surface fully and continuously wet with the solution for 2 minutes, minimum.

(6) When the 2 minutes is completed, the wetted surface must look like a water-break-free surface.

NOTE: The solution surface tension at the edges of an aluminum skin can cause the solution film to pull away from the edge a small distance. This condition is permitted unless it is caused by surface contamination or incorrect abrading.

(a) The solution film on the bond surface must stay continuous for a minimum of 30 seconds.

(b) If the solution film does not stay continuous for a minimum of 30 seconds, there is surface contamination. Do the cleaning, abrasion and application steps again.

(7) If the break-free surface test is satisfactory, then drain off the remaining solution.

(8) If you see drops of solution in crevices, pockets, or other contained areas, then they must be removed.

(a) Lightly blow off the drops of solution with filtered dry air, or

(b) Carefully remove the drops with clean cheesecloth or other absorbent material that is moist with Boegel (AC-130).

NOTE: Do not rub or wipe the surface. Do not touch the surface with your bare skin or with gloves that have contamination on them.

F. Let the treated surfaces dry at room temperature for 60 minutes, minimum. You can use an oven, heat lamp, or forced air that is oil-free and is no hotter than 160° F (71° C) to dry the parts.

G. Examine all of the treated surface. The surface must look dry and not have dust, fingerprints or other contamination. Use filtered forced air to remove dust. If there is contamination that cannot be removed with forced air, then clean, abrade, and do the Boegel steps again.

NOTE: It is possible that you see stains on the prepared surface after the surface is dry. These stains are permitted.

H. If you put a mask on open honeycomb core during par. 14.E.(1), then remove it now. Make sure that you do not touch the surface to be bonded. Do not let moisture get into the core cells. Make sure that the core is fully dry before you apply the adhesive primer.

BOEING PROPRIETARY - Copyright © - Unpublished Work - See title page for details.

I. Keep the bond surface(s) clean if you cannot apply the adhesive primer immediately.

(1) Do not touch the surface(s) with your bare skin, waxed paper, or material that has a release agent or other contamination.

(2) If protection of the surface(s) is necessary, then put vacuum bag film or unwaxed paper (without ink or other contamination on it) on the bond surface(s).

J. Apply BMS 5-89, Type II (BR 6747-1 only) adhesive primer not later than 24 hours after you apply the Boegel (AC-130) solution. Refer to par. 15. Clean the bond surface and do the Boegel (AC-130) procedure again if the bond surface has contamination.

15. Application of BMS 5-89 Adhesive Primer to the Bond Surface

A. Remove the primer from storage. Do not open the container until it is between 65° and 90° F (18° and 32° C).

NOTE: Refer to Boeing Process Specification BAC 5514-589 "Application of Corrosion Inhibiting Adhesive Primer" for the storage and shelf life specifications. Do not use a primer that shows signs of deterioration. Do a check for signs of lumps or gelatin.

WARNING: DO NOT GET SOLVENTS IN YOUR MOUTH, YOUR EYES, OR ON YOUR SKIN. DO NOT BREATHE THE FUMES FROM SOLVENTS. SOLVENTS ARE DANGEROUS MATERIALS. SOLVENTS CAN BE FLAMMABLE OR CAUSE DAMAGE TO THE ENVIRONMENT. REFER TO THE MATERIAL SAFETY DATA SHEETS (MSDS) AND THE LOCAL SAFETY PRECAUTIONS.

DO NOT USE SOLVENT BASED PRIMERS IN AREAS WITH EQUIPMENT THAT PRODUCE HEAT OR A SPARK. IF YOU DO, AN EXPLOSION CAN OCCUR AND CAUSE INJURY.

CAUTION: PREVENT CONTAMINATION OF THE PARTS AFTER YOU DO A SURFACE PREPARATION. WEAR CLEAN GLOVES, OR USE HOOKS TO MOVE THE PARTS. DO NOT APPLY THE PRIMER IF THE TEMPERATURE IS LESS THAN 50° F (10° C) OR MORE THAN 85 PERCENT OF THE RELATIVE HUMIDITY. IF YOU DO NOT OBEY, THE RESULT CAN BE AN UNSATISFACTORY BOND.

B. Mix the BMS 5-89 adhesive primer. Use the manufacturer's instructions, or Boeing Process Specification BAC 5514-589 "Application of Corrosion Inhibiting Adhesive Primer".

C. Apply the BMS 5-89 adhesive primer.

NOTE: BMS 5-89 must be baked after it is applied. Because you cannot measure the thickness until after you bake, you need sufficient training or experience to know what a good thickness looks like (You can also use a visual reference standard, or you can do an experiment on an aluminum part that will not be used for the repair). It is permitted for you to apply BMS 5-89 primer on painted surfaces adjacent to the bare aluminum surface. It is not necessary to measure the thickness of the primer that is applied to the painted surfaces adjacent to the bare aluminum. It is not necessary to measure the thickness of the primer on the edges of the repair parts or the edges of the removed damage area. You have a maximum of 120 hours to start the baking procedure.

BOEING PROPRIETARY - Copyright © - Unpublished Work - See title page for details.

(1) Apply the primer to a thickness that will be between 0.00015 and 0.00040 inch (0.004 and 0.010 mm) after baking.

NOTE: It can be necessary to apply the primer two or more times to get it to the specified thickness. Continuously shake the container (that has the primer) each 3 to 5 seconds until the procedure is completed.

(2) Apply the primer to the edges of the repair parts and the edges at the removed damage area.

CAUTION: DO NOT USE FORCED AIR ON THE WET SURFACE. DEFECTS AND DAMAGE TO THE PRIMER CAN OCCUR. PROTECT THE PRIMER FROM DUST OR OTHER CONTAMINATION. IF YOU DO NOT, THE STRENGTH OF THE REPAIR CAN BE REDUCED.

D. Let the primer dry. If more than one side will have primer, make sure that the first side is dry before you apply primer to the second side.

NOTE: Do not use Type I or III primer if you did the Boegel (AC-130) surface preparation.

(1) BMS 5-89, Type I solvent based primer can be dried for 30 minutes at room temperature. As an alternative, you can dry the primer with a heat lamp that is no hotter than 200° F (93° C) until the primer is hard (tack-free).

(2) BMS 5-89, Type II or III water based primer can be dried at room temperature, or with a heat lamp until all of the water that you see is gone (the primer does not look wet).

(3) After BMS 5-89, Type III primer has dried, let it stay for 15 more minutes (minimum) before you start to bake.

E. Bake the primer at 240° ±20° F (116° ±12° C) for 30 to 120 minutes. Use an oven, heat lamp, or hot air.

NOTE: As an alternative, you can do a two stage cure. First, bake the primer at 175° F (80° C) for 2 hours minimum. Then do the layup. The cure will be complete when the adhesive is cured.

F. Measure the primer thickness. You can use an eddy current procedure, a visual standard, or a procedure that gives the equivalent satisfactory results.

(1) If the primer is not at the specified thickness, then you must remove the primer.

(a) Do one of the surface preparations in par. 11. and put adhesive primer on the bond surface again.

(b) Bake the primer and measure the thickness again.

(2) If the thickness is satisfactory, apply the adhesive as given in par. 18. or par. 19.

BOEING PROPRIETARY - Copyright © - Unpublished Work - See title page for details.

16. Hydrofluoric (HF) - Alodine Procedure

NOTE: This surface preparation procedure has size limits. Refer to Fig.1.

A. The materials that you need are:

(1) Hydrofluoric Acid (HF)

(2) 3M Scotch-Brite, Type A, very fine pads or a high grade alumina sandpaper (180-grit or finer)

(3) Aluminum Foil Tape

(4) Solid FEP

(5) Cheesecloth, gauze or clean cotton rags, or BMS 5-15 Class A wipers

(6) Blue litmus paper

(7) Alodine 1200

(8) Acetone or Methyl Propyl Ketone (MPK) Solvent

(9) BAC 5710 Type 60 Adhesive Primer

B. Clean and abrade the repair surfaces.

WARNING: DO NOT GET SOLVENTS IN YOUR MOUTH, YOUR EYES, OR ON YOUR SKIN. DO NOT BREATHE THE FUMES FROM SOLVENTS. SOLVENTS ARE DANGEROUS MATERIALS. SOLVENTS CAN BE FLAMMABLE OR CAUSE DAMAGE TO THE ENVIRONMENT. REFER TO THE MATERIAL SAFETY DATA SHEETS (MSDS) AND THE LOCAL SAFETY PRECAUTIONS.

(1) Do a solvent wipe with MPK or acetone as given in SOPM 20-30-03.

(2) Abrade the surfaces with Scotch Brite, Type A, very fine pads or a high grade alumina sand paper (180-grit or finer). The metal surface should look clean when you finish this step of the process.

(3) Remove the unwanted abrasive particles from the surface. Use clean dry air or nitrogen.

(4) Do a solvent wipe with MPK or acetone as given in SOPM 20-30-03.

CAUTION: DO NOT PERMIT THE ACID SOLUTION TO TOUCH OTHER SURFACES ADJACENT TO THE REPAIR BOND AREAS. IF IT DOES, THE RESULT CAN BE DAMAGE TO THE PAINT AND ADHESIVE SYSTEMS.

(5) Isolate the mechanical fasteners and all the areas that are not damaged, with aluminum foil tape or a combination of aluminum foil tape and polyethylene film (or the equivalent). This will prevent acid contamination.

BOEING PROPRIETARY - Copyright © - Unpublished Work - See title page for details.

(6) Put on a mask to seal all areas where the damage goes through a skin. To make the mask, put aluminum foil tape, solid FEP or other satisfactory material on top of the honeycomb.

NOTE: If you do a one-stage repair, make sure that the hole is filled before you put on the mask. Example: you can put the honeycomb repair core in the hole (without the core splice adhesive) or you can put in a solid plug.

(7) Flush with clean water and/or wipe with a clean, lint-free cloth until no visible residue appears on the cloth.

C. Do a visual inspection for a water-break-free surface.

(1) Flush the surface with clean (mineral-free or de-ionized) water. Do this for 30 seconds or until the surface has a continuous water film on all of the repair area.

NOTE: The preferred water temperature is between 50° and 100° F (10° and 38° C).

(2) After the flush procedure is completed, the water film on the bond surface must stay continuous for a minimum of 30 seconds.

NOTE: The water surface tension at the edges of an aluminum skin can cause the water film to pull away from the edge a small distance. This condition is permitted unless it is caused by visible surface contamination or incorrect abrading.

(3) If the film does not remain continuous for a minimum of 30 seconds, do par. 16.B. and par. 16.C.

WARNING: DO NOT BREATHE THE FUMES WHEN YOU DO WORK WITH HYDROFLUORIC ACID SOLUTIONS. USE MECHANICAL AIRFLOW AND RESPIRATORY PROTECTION. DO NOT LET THE SOLUTIONS TOUCH YOUR EYES OR SKIN. WEAR GLOVES AND PROTECTIVE CLOTHING. IF YOU DO NOT OBEY, YOU CAN CAUSE SKIN IRRITATION OR INJURY. IF THE SOLUTION TOUCHES YOUR EYES, CLEAN WITH A LARGE QUANTITY OF WATER AND GET MEDICAL AID IMMEDIATELY.

D. Prepare the Alodine 1200 solution as given in 51-10-2. Let it stay mixed for one hour before you use it.

NOTE: A dirty solution is not satisfactory for use. Prepare the solution in small quantities. Discard the solution if you do not use it before 24 hours or if the solution is dirty. If you use non-distilled water, then add nitric acid to control the pH of the solution. For the Alodine 1200 product, the pH must be between 1.5 and 2.0. Use pHydrion papers to check the pH of the solution.

BOEING PROPRIETARY - Copyright © - Unpublished Work - See title page for details.

E. Do the HF acid etch procedure.

(1) Make sure that the temperature of the HF acid and the aluminum part stays between 50° and 100° F (10° and 38° C) during the etch procedure.

(2) Make a clean cloth moist, but do not soak it, with a 2 percent solution of HF acid. Rub the bond mating surface area with the moist cloth. Let the solution stay on the surface for 15 to 30 seconds.

(3) Quickly rub mating surfaces of the bond area with the moist cloth.

(4) Let the HF solution stay on the surface for approximately 15 to 30 seconds.

(5) Quickly remove the solution with a cloth moist with clean water.

NOTE: Do not permit the cloth to touch the etched surface for more than 2 minutes. Do not permit the cloth to touch surfaces that were not etched with the HF solution and then to touch the etched surfaces. This will cause contamination of the etched surfaces.

F. Apply the Alodine solution to the etched area as given in 51-10-2.

NOTE: Do not permit the etched surfaces to dry before you apply the chemical conversion coating.

(1) Make sure that the temperature of the Alodine and the aluminum part stays between 50° and 100° F (10° and 38° C) during the procedure.

(2) Apply the Alodine solution to the etched area in less than 60 seconds after the HF acid etch procedure is completed.

(a) Apply the Alodine solution with a fiber or nylon brush, or clean, dry cheesecloth.

NOTE: Make sure that you apply a sufficient quantity of chemical conversion coating to give a smooth layer.

(b) Make sure that the etched area stays moist with Alodine solution for 3 to 4 minutes.

CAUTION: USE CARE WHEN YOU RINSE THE COATED SURFACE. IF YOU DO NOT, THE RESULT CAN BE AN UNSATISFACTORY CHEMICAL CONVERSION COATING. THE NEW COATING IS FRAGILE AND CAN BE EASILY DAMAGED.

(3) Rinse the area with a moist, but not soaked, cheesecloth. Make sure that the cheesecloth and water are clean.

NOTE: Lightly touch the surface for 1 to 2 minutes. Then, do it again with another clean moist cheesecloth to remove more of the solution from the surface. Do not wipe the surface.

BOEING PROPRIETARY - Copyright © - Unpublished Work - See title page for details.

(4) Do a check of the repair area to see if acid remains on the surface.

(a) Look at the repair surface and all of the crevices in the repair area.

(b) If you see moisture, use blue litmus paper to make sure that there is no acid on the surface or in the crevices.

NOTE: If the litmus paper remains blue then remove the moisture and continue with the procedure. If the litmus paper changes to a red color, then acid remains on the surface. You must do par. 16.F.(3) and par. 16.F.(4) again until the litmus paper remains blue.

CAUTION: USE CARE WHEN YOU DRY THE COATED SURFACE. DO NOT WIPE OR RUB THE SURFACE. THE NEW COATING IS FRAGILE AND CAN BE EASILY DAMAGED.

(5) Carefully dry the surface with clean dry cheesecloth to remove the rinse water. If necessary, do this again to remove the water from the surface.

WARNING: DO NOT PERMIT THE CHEMICAL CONVERSION COATING TO DRY ON THE BRUSHES OR CHEESECLOTH. MAKE SURE THAT YOU WASH ALL OF THE COATING FROM THE FROM THESE MATERIALS BEFORE IT IS DRY. WRING OUT THE MATERIALS AND PUT THEM INTO A FIRE-PROOF CONTAINER. IF YOU DO NOT, THE RESULT CAN BE A CHEMICAL FIRE CAUSED BY SPONTANEOUS COMBUSTION.

(6) Do not put materials that have Alodine on them in the same container with materials that have solvent on them.

(a) Wash all of the Alodine from the materials used for the application, before the materials are discarded.

(b) Discard the materials in an approved container. Use a procedure to discard these materials that is permitted by your local safety, health, and environmental authorities.

(7) Permit the surfaces to fully air-dry. You are permitted to use filtered hot air up to a maximum of 130° F (54° C). A minimum 15 minutes is recommended.

NOTE: You must apply the final finish or start the adhesive procedures as soon as possible after the chemical conversion coating is dry. Wear clean gloves to keep contamination from the part.

G. Do a visual check of the repair surface for a powdery coating. All Alodine coatings must be free of powder.

(1) If you find a powdery coating on the surface, then you must do par. 16.F.(3) through par. 16.F.(7) and par. 16.G. again until the surface is free of powder.

(2) If the surface is free of powder, then continue with the procedure.

H. If you put a mask on open honeycomb core during par. 16.B.(6), then remove it now. Make sure that you do not touch the surface to be anodized. Do not let moisture get into the core cells.

BOEING PROPRIETARY - Copyright © - Unpublished Work - See title page for details.

(1) Do a visual check for moisture in the cells. If you see moisture, use blue litmus paper to make sure that there is no acid contamination.

(a) If the litmus paper changes to a red color, there is acid contamination in the core cells. Flush the core with water. Use more blue litmus paper and do a check for acid again.

(b) If the litmus paper stays blue, there is no acid in the core. Remove the moisture, then continue with the procedure.

(2) Make sure that the core is fully dry before you apply the adhesive primer.

I. Keep the bond surface(s) clean if you cannot apply the adhesive primer immediately.

(1) Do not touch the surface(s) with your bare skin, waxed paper, or material that has a release agent or other contamination.

(2) If protection of the surface(s) is necessary, then put vacuum bag film or unwaxed paper (without ink or other contamination on it) on the bond surface(s).

J. Apply the BAC 5710, Type 60 adhesive primer not later than 24 hours after you apply the Alodine. Refer to par. 17. Clean the bond surface and do the HF Alodine procedure again if the bond surface has contamination.

17. Application of BAC 5710, Type 60 Adhesive Primer

WARNING: DO NOT GET SOLVENTS IN YOUR MOUTH, YOUR EYES, OR ON YOUR SKIN. DO NOT BREATHE THE FUMES FROM SOLVENTS. SOLVENTS ARE DANGEROUS MATERIALS. SOLVENTS CAN BE FLAMMABLE OR CAUSE DAMAGE TO THE ENVIRONMENT. REFER TO THE MATERIAL SAFETY DATA SHEETS (MSDS) AND THE LOCAL SAFETY PRECAUTIONS.

WARNING: DO NOT USE SOLVENT BASED PRIMERS IN AREAS WITH EQUIPMENT THAT PRODUCE HEAT OR A SPARK. IF YOU DO, AN EXPLOSION CAN OCCUR AND CAUSE INJURY.

A. Mix the Courtaulds Aerospace 515X346 primer with 910X520 catalyst and the 020-702 thinner. Refer to Table 5 for the mixture ratio of the primer components.

B. Prepare the mixture as given in the manufacturer's instructions.

(1) Permit the mixture to stay at room temperature for 30 minutes before you apply it to the surface.

(2) Apply the primer before 60 minutes after you apply the chemical conversion coating to the repair area.

NOTE: Do not apply the primer if its pot-life has expired (8 hours at 77°F (25°C)).

BOEING PROPRIETARY - Copyright © - Unpublished Work - See title page for details.

COMPONENTS	MIX RATIO BY VOLUME
515X346 Base	4 parts
910X520 Catalyst	1 part
020-702 Thinner	4 parts

Necessary Mix Ration for the BAC 5710, Type 60 Primer Components
Table 5:

CAUTION: PREVENT CONTAMINATION OF THE PARTS AFTER YOU DO A SURFACE PREPARATION. WEAR CLEAN GLOVES, OR USE HOOKS TO MOVE THE PARTS. DO NOT APPLY THE PRIMER IF THE TEMPERATURE IS LESS THAN 50° F (10° C) OR MORE THAN 85 PERCENT OF THE RELATIVE HUMIDITY. IF YOU DO NOT OBEY, THE RESULT CAN BE AN UNSATISFACTORY BOND.

C. Apply a layer of primer to the surface to give a 0.0002 to 0.0008 inch (0.005 to 0.020 mm) dry film thickness.

D. Measure the primer thickness with an eddy current procedure, or a procedure that uses a visual standard, or with a procedure that gives the equivalent satisfactory results.

NOTE: If the primer is more than the specified thickness, then you must remove the primer, do the HF chemical conversion procedure, and apply the primer again. Do not continue unless you have the correct primer thickness. If a second layer of the primer is necessary, permit the first layer to air dry for 1 hour before you apply the second layer.

E. Permit the primer to air dry at a temperature between 70°F and 90°F (21°C and 32°C) for 60 to 90 minutes before you apply the adhesive.

(1) Keep the primed mating surfaces free from contamination and sunlight.

(2) Do not store the primed mating surfaces for more than 7 days before you make the bond.

(3) Do not wipe the primed mating surfaces with solvent before you make the bond.

F. Apply the adhesive as given in par. 18. or par. 19.L. as applicable. Refer to Fig. 1 for repair size limitations.

18. Application of BMS 5-101 Film Adhesive

A. Make a clear plastic template that shows the size and shape of the largest external doubler and the damage cutout. Use the template to make ink marks on the primed surface where the largest external doubler must be put.

NOTE: Use a water-resistant, alcohol based ink pen that will not contaminate or damage the primer or the adhesive. You can use a Sharpie2 SAN30000, SAN35000, or SAN37000 Series fine point pen (or an equivalent pen). Sharpie2 pens are a trademark of the Sanford Corporation.

BOEING PROPRIETARY - Copyright © - Unpublished Work - See title page for details.

WARNING: DO NOT GET SOLVENTS IN YOUR MOUTH, YOUR EYES, OR ON YOUR SKIN. DO NOT BREATHE THE FUMES FROM SOLVENTS. SOLVENTS ARE DANGEROUS MATERIALS. SOLVENTS CAN BE FLAMMABLE OR CAUSE DAMAGE TO THE ENVIRONMENT. REFER TO THE MATERIAL SAFETY DATA SHEETS (MSDS) AND THE LOCAL SAFETY PRECAUTIONS.

B. Make sure that you do these application steps in a clean area. Use a tabletop or other non-airplane component work surface when you cut adhesive film.

(1) Clean all the work surfaces, templates, and tools with solvent. Remove all contamination. Refer to SOPM 20-30-03.

(2) If necessary, you can put clean vacuum bag film on the work surface to keep contamination off the adhesive.

C. Cut a layer of BMS 5-121 positioning fabric to a larger diameter than the largest repair doubler. Cut the fabric so that the edge of the fabric is 0.5 inch (13 mm) minimum, from the edges of the largest repair doubler.

NOTE: BMS 5-121 positioning fabric is not necessary when you use a pressurized autoclave. Positioning fabric is necessary when you use a vacuum bag procedure on a honeycomb panel with more than 64 square inches (400 square cm) of open core. If two sides of a honeycomb panel are repaired with external doublers, it is not necessary to use positioning fabric on more than one side. If you do a flush repair, put the positioning fabric on the side that has the external doubler. As an option, you can use positioning fabric on repairs that are 64 square inches (400 square cm) or less.

D. Cut the film adhesive. Refer to Fig. 12 for the steps that follow:

(1) Use only certified film adhesives from the Boeing Material Specification Qualified Products List (QPL).

NOTE: A manufacturer can make an adhesive film material that can be qualified to BMS 5-129 and/or to BMS 5-101 and be listed in each Qualified Products List (QPL). Do not use a BMS 5-129 material for a metal bond repair unless the material has been tested and certified to the BMS 5-101 specification also.

(2) Keep the bag that contains the roll of film adhesive at room temperature until there is no condensation on the bag.

NOTE: Do not touch the adhesive with your bare skin. Wear gloves to protect the adhesive from contamination.

(3) Put the film adhesive on a clean work surface. Make sure that the film adhesive side that is against the work surface has a separator sheet.

BOEING PROPRIETARY - Copyright © - Unpublished Work - See title page for details.

(a) If you use OST with BMS 5-121 positioning fabric, make sure that the mat side is up, tacky side down, against the work surface. If you use OST without the positioning fabric, make sure that the tacky side is up, mat side down, against the work surface.

NOTE: OST film adhesive has a mat carrier cloth on one of the outer surfaces, thus producing one side that is more tacky than the other side. Non–OST mat or knit film adhesive has a carrier cloth in the middle of the adhesive, thus both sides are equally tacky. Both OST and Non-OST can be used with BMS 5-121 positioning fabric.

(b) If you are using BMS 5-101 Grade 5 film adhesive, then put two plies on the work surface. Make sure that you remove the separator sheet (or sheets) between the plies.

(c) If you are using BMS 5-101 Grade 10 or 15 film adhesive, then put one ply on the work surface.

NOTE: Do not use Grade 15 film adhesive to bond parts that have a gage thickness of 0.020 inch or less.

(4) Put the repair part with the surface to be bonded against the adhesive. If there is a separator sheet on top of the adhesive, make sure that it is removed.

(5) Cut the film adhesive all around the repair part with a sharp knife. Let the film adhesive extend 0.01 to 0.1 inch (0.3 to 2.5 mm) from the edge of the repair part.

(6) If you are using BMS 5-101 Type II, Grade 5 or 10 film adhesive, and the repair has an open core, then cut a piece of adhesive to the same dimensions as the open core. (Do not do this step if you are using a Grade 15 film adhesive).

NOTE: If a piece of OST film adhesive is not a symmetrical shape, then make sure that you cut it so that the mat side will be up when you put it on the honeycomb core.

E. Put the BMS 5-121 positioning fabric (when specified) on to the area to be repaired. Make sure that the edges of the fabric go past the marks that were made in par. 18.A. a minimum of 0.5 inches (13 mm).

NOTE: If you can not see the marks through the fabric, then use the template again to make marks that will show the position of the largest external doubler.

F. Put each of the repair parts (one at a time and in the correct sequence) on to the surface to be repaired. Refer to Fig. 12 and the applicable repair procedure in Table 2.

(1) Remove the separator sheet from each repair part before it is installed.

(2) Apply equal and light finger pressure to each repair part as it is installed.

(3) Apply small pieces of high-temperature polyester tape (or equivalent) to the edges of the repair part(s) to hold the part(s) on to the part to be repaired.

BOEING PROPRIETARY - Copyright © - Unpublished Work - See title page for details.

G. Do the instructions that follow to assemble the vacuum bag. Refer to Fig. 14.

(1) Put a breather strip all around and against the edges of the largest external repair doubler.

NOTE: Put the breather strips on the BMS 5-121 positioning fabric (when the fabric is specified).

(2) Put thermocouples at the edges and top of the repair doubler(s) as given in Fig. 13.

NOTE: Use thermocouples and a measurement system that can measure temperature to a minimum accuracy of ±5°F (±3°C).

(3) Connect the thermocouples to the applicable temperature recorder devices.

(4) Get a heat blanket that is a minimum 2 inches (50 mm) larger all around than the largest repair doubler.

(5) Use the heat blanket dimensions to find the correct dimensions of the layup and bagging materials.

(a) Cut two layers of dry peel ply that are 2 inches (50 mm) larger all around than the dimensions of the heat blanket. Put one of the dry peel plies on the repair part(s). Make sure that the edges of the peel ply extend an equal distance from the edges of the largest repair doubler.

(b) Cut a layer of solid or perforated FEP parting film to the same dimensions as the heat blanket. Put the parting film on to the dry peel ply. Make sure that the edges of the parting film are an equal distance from the edges of the peel ply.

(c) Put the second dry peel ply on to the first peel ply and the parting film. Make sure that the edges of the second peel ply are against the edges of the first peel ply.

(6) Protect the component to be repaired from too much heat.

(a) If there are attached fittings on the part to be repaired, then put insulation material between the attached fittings and the heat blanket.

(b) If the heat blanket extends more than 3.0 inches (75 mm) from the edge of the damage cutout, you can do this recommended procedure:

NOTE: If a heat blanket gets too hot, it can cause damage to the repair and to the adhesive in the undamaged skin. To help prevent damage (if the heat blanket gets too hot), do not let the heat blanket touch more skin than is necessary. Insulation between the heat blanket and the skin is recommended.

1) Put one edge of each insulation material on the skin, 2.0 to 3.0 inches (50 to 75 mm) from the edge of the damage cutout.

2) Put the opposite edge of each insulation material where the edges of the heat blanket will be.

BOEING PROPRIETARY - Copyright © - Unpublished Work - See title page for details.

(7) Put the heat blanket on to the top peel ply. Make sure that edges of the heat blanket are an equal distance from the edges of the peel ply (and the insulation, if applicable).

(8) Put four to six layers of glass fabric (or two layers of 0.04 inch (1.0 mm) breather fabric, or one layer of 0.1 inch (2.5 mm) breather fabric) above the heat blanket as a breather. Make sure that the breather is 2 inches (50 mm) larger all around than the heat blanket.

(9) Put a vacuum base above the fiberglass breather cloth for each vacuum port and vacuum gage port.

(10) Put on the vacuum bag sealant.

(a) You can put the vacuum bag sealant all around the area to be repaired, or

(b) If you use an envelope bag procedure, then seal the open part of the bag with the sealant.

(11) Make a hole in the outer vacuum bag at the vacuum base location for each vacuum port and vacuum gage port.

(12) Put the vacuum bag film on the repair area.

(13) Connect the vacuum port and vacuum gage ports to their vacuum bases.

NOTE: A procedure to remove the vacuum source will be necessary, that will not decrease the vacuum in the bag. If necessary, put a valve on the vacuum line between the vacuum bag and the vacuum source.

(14) If necessary, put insulation material on the outer surface of the vacuum bag.

19. Application of BMS 5-92 or BMS 5-141 Paste Adhesive

NOTE: Only small repair sizes can use these adhesives. Refer to Fig. 1 for permitted repair sizes.

A. Make a clear plastic template that shows the size and shape of the largest external doubler and the damage cutout. Use the template to make ink marks on the primed surface where the largest external doubler must be put.

NOTE: Use a water-resistant, alcohol based ink pen that will not contaminate or damage the primer or the adhesive. You can use a Sharpie2 SAN30000, SAN35000, or SAN37000 Series fine point pen (or an equivalent pen). Sharpie2 pens are a trademark of the Sanford Corporation.

BOEING PROPRIETARY - Copyright © - Unpublished Work - See title page for details.

WARNING: DO NOT GET SOLVENTS IN YOUR MOUTH, YOUR EYES, OR ON YOUR SKIN. DO NOT BREATHE THE FUMES FROM SOLVENTS. SOLVENTS ARE DANGEROUS MATERIALS. SOLVENTS CAN BE FLAMMABLE OR CAUSE DAMAGE TO THE ENVIRONMENT. REFER TO THE MATERIAL SAFETY DATA SHEETS (MSDS) AND THE LOCAL SAFETY PRECAUTIONS.

CAUTION: MAKE SURE THAT YOU DO THIS PROCEDURE IN A CLEAN AREA. DO NOT LET CONTAMINATION OF THE REPAIR PARTS OCCUR. IF YOU DO NOT OBEY, YOU CAN CAUSE AN UNSATISFACTORY REPAIR.

B. Clean the work area, templates, and tools with solvent before you start to apply the adhesive. Refer to SOPM 20-30-03 for the applicable solvents and procedures.

CAUTION: DO NOT MIX MORE THAN 450 GRAMS OF BMS 5-141 AT ONE TIME. IF YOU DO, AN EXOTHERMIC REACTION (A BUILD-UP OF HEAT) CAN OCCUR. THE RESULT CAN BE DAMAGE TO THE ADHESIVE.

C. Use one of the adhesives that follow:

(1) BMS 5-92

(a) Type V, Class 1 or Class 2 (preferred).

(b) Type I, Class 4 (alternative).

(2) BMS 5-141

D. Refer to the manufacturer's instructions to mix paste adhesives. Tap the container or use a satisfactory procedure to remove air bubbles from the mixture.

NOTE: As an aid to make sure that you get the necessary thickness on the bond surface, you can add up to 1 percent by weight of 0.005 inch (0.13 mm) diameter glass beads. Mix the glass beads with the Part B hardener before you add the Part A base.

E. Apply a thin, smooth layer of paste adhesive to all of the mating surfaces.

NOTE: Do not touch the adhesive with your bare skin. Wear gloves to protect the adhesive from contamination.

(1) Make sure that the mating surfaces have adhesive primer on them before you apply the paste adhesive.

(2) After you mix the adhesive, apply the mixture to the repair parts as soon you can, but not after the pot-life has expired. Make sure that the mating surfaces have sufficient adhesive so that it will squeeze out from the edges of the repair part(s) when you mate them.

(3) After you apply the adhesive, you have a maximum of 5 minutes to mate the repair parts(s). (After 5 minutes, the adhesive will get a thin, cured skin layer on it, that will make it difficult to get a good bond).

F. Install the repair parts.

BOEING PROPRIETARY - Copyright © - Unpublished Work - See title page for details.

(1) Put the repair parts into their correct positions.

NOTE: Use a satisfactory procedure to remove air bubbles from that can be below each repair part. For example, you can put one edge of the repair part on the component. Then slowly put the repair part on the adhesive.

(2) Apply a equal and continuous pressure of 1 psi (7 kPa) minimum, to the surface of the repair parts. Let the adhesive squeeze out all around the edges.

WARNING: DO NOT GET SOLVENTS IN YOUR MOUTH, YOUR EYES, OR ON YOUR SKIN. DO NOT BREATHE THE FUMES FROM SOLVENTS. SOLVENTS ARE DANGEROUS MATERIALS. SOLVENTS CAN BE FLAMMABLE OR CAUSE DAMAGE TO THE ENVIRONMENT. REFER TO THE MATERIAL SAFETY DATA SHEETS (MSDS) AND THE LOCAL SAFETY PRECAUTIONS.

G. Clean all of the unwanted adhesive from the repair parts with solvent before you continue with the cure. Refer to SOPM 20-30-03 for the applicable solvents and procedures. Remove all of the contamination.

NOTE: Do not permit the solvent to get in the bond line.

20. Cure the bond

A. Vacuum bag procedure for film adhesives. (See par. 20.C. for autoclave cure).

(1) Remove some of the air out of the honeycomb core before you start the cure.

(a) Use an initial vacuum of 3 to 5 inches (7.6 to 12.7 cm) of mercury (Hg) for 15 minutes.

(b) Apply a vacuum to a minimum of 22 inches (56 cm) of mercury (Hg) for 1 minute.

(2) Do an inspection of the vacuum bag. Look for leaks in the vacuum bag.

NOTE: A vacuum bag that has a leak can cause porosity in the adhesive and a weak bond.

(a) Remove the vacuum source.

NOTE: Do not disconnect the vacuum line(s). This can cause a loss of vacuum in the bag.

(b) Monitor the vacuum gage. After 5 minutes, the total difference in the vacuum must be less than 5 inches of (12.7 cm) of mercury (Hg).

WARNING: USE ONLY EXPLOSION-PROOF EQUIPMENT WHEN YOU DO THESE TYPES OF REPAIRS. IF YOU DO NOT, PERSONAL INJURY AND DAMAGE TO ADJACENT EQUIPMENT CAN BE THE RESULT. WHEN YOU WORK WITH FLAMABLE MATERIALS, HEAT, FIRE OR SPARKS CAN CAUSE AN EXPLOSION.

(3) Cure the bond as given in Table 6.

BOEING PROPRIETARY - Copyright © - Unpublished Work - See title page for details.

(a) You can use hot air, heat lamps, or a radiant heater with the heat blankets, if necessary.

(b) Start to measure the cure time after the thermocouples show the bond to be at the specified cure temperature.

ADHESIVE SPECIFICATION	CURE TEMPERATURE	CURE TIME (MINIMUM)	RATE OF TEMPERATURE INCREASE PER MINUTE
BMS 5-92, Type I or V Adhesive Resin	Refer to Fig. 10	Refer to Fig. 10	Not Applicable
BMS 5-101 Adhesive Film	225°F to 260°F (107°C to 127°C)	90 minutes	3 ± 2° F (2 ± 1° C)
BMS 5-141 Adhesive Paste	Refer to Fig. 11	Refer to Fig. 11	Not Applicable

Adhesive Cure Data
Table 6:

(4) Apply and keep a vacuum at a minimum of 20 inches (50 cm) of mercury (Hg) during the cure cycle.

(5) If it is necessary to add more pressure, put shot-bags, clamps or other mechanical pressure on to the repair area.

NOTE: If the repair is on a honeycomb panel, this pressure can prevent a disbond, (during the cure cycle) between the undamaged skin and core.

(a) The pressure must be applied equally to all the areas. The total pressure on a honeycomb panel must not be more than 25 psi (170 kPa).

(b) Use cast ceramic, plaster, or plastic tools when you apply pressure to the outer skin on a contoured or rounded panel.

(6) When the cure time is completed, decrease the temperature at a rate of 5°F (3°C) a minute.

(7) Let the repaired part decrease in temperature to 150°F (66°C) or less before you release the pressure.

NOTE: If a temperature indication goes below the specified cure temperature, then extend the cure time before you decrease the temperature. Continue at the specified cure temperature for a minimum time equal to the time that the indication was below the specified cure temperature.

B. Paste adhesives.

(1) Continue to apply 1 psi (7 kPa) minimum pressure.

BOEING PROPRIETARY - Copyright © - Unpublished Work - See title page for details.

(2) You can decrease the cure times for paste adhesives if you increase the cure temperature of the repair. Refer to Fig. 10 and Fig. 11 for the time-temperature cure charts. You can use an oven, hot air, heat lamps, or a radiant heater to increase the cure temperature.

NOTE: To keep the strength in the aluminum material, do not use a cure temperature that is more than 260° F (127° C).

C. If you use an autoclave:

(1) Make sure that you use an applicable tool to hold all of the parts in their positions during the repair procedure.

NOTE: In most (but not all) conditions, the tool must be the same contour as the part to be cured.

(2) Increase the pressure and temperature in the autoclave as specified in Boeing Process Specification BAC 5514 "Common Bonding Requirements for Structural Adhesives" (or equivalent procedure).

(3) Cure the bond as given in Table 6.

(4) After the cure is completed, decrease the pressure and temperature as specified in Boeing Process Specification BAC 5514 "Common Bonding Requirements for Structural Adhesives" (or equivalent procedure).

21. Do an examination of the bonded repair

A. Use a synthetic fiber material (Scotchbrite2 pads, for example) to remove all fabric, plastic film, and thermocouple materials that are bonded to the outside of the repair. Make sure that you do not scratch the aluminum or remove clad material.

B. Do a visual inspection of the repair doubler(s).

(1) Look for a continuous bead of cured adhesive around the edges of each repair doubler. Look for disbonds, gaps, or a failure of the bond line. No disbonds, gaps or failures at the bond line (that you can see) are permitted. If some of the bead is missing or not fully cured, the repair is unsatisfactory.

NOTE: A bead that is not fully cured will be soft and tacky.

(2) Look to see if a repair doubler moved during the cure. Movement of 0.06 inches (1.5 mm) or less is permitted.

C. A post repair Non-Destructive Inspection (NDI) of the repair area is recommended.

(1) If a heat blanket was used, then do an NDI of the area that was below the heat blanket. If you use NDI procedures, refer to NDT Part 1, 51-01-01 and NDT Part 1, 51-04-00. Other NDI procedures, if they are satisfactory, are also permitted.

NOTE: You can use a tap test procedure as an alternative inspection procedure for a skin thickness that is a 0.040 inch (1.0 mm) or less. Use the tap test as given in NDT Part 1, 51-05-01.

BOEING PROPRIETARY - Copyright © - Unpublished Work - See title page for details.

(2) Continue to use NDI to examine the area 8 inches (20 cm) from where the edges of the heat blanket were.

(3) If you find an NDI indication that shows a possible disbond, you can do additional tests and analysis to verify that it is a disbond. If tests and analysis verify that the repair has a disbond, then the repair is unsatisfactory.

D. Remove all repair parts that have an unsatisfactory bond or cut out and repair the area that is disbonded. Do all of the necessary repair steps to make the repair satisfactory.

22. Clean, seal and finish

A. If the repair is satisfactory, then clean the surfaces that are to be sealed and finished. Refer to AMM 51-20-21.

B. Seal all of the gaps and edges of the doubler(s) as given in 51-20-4.

C. Apply a protective finish to the bare surfaces as given in AMM 51-21-0.

BOEING PROPRIETARY - Copyright © - Unpublished Work - See title page for details.

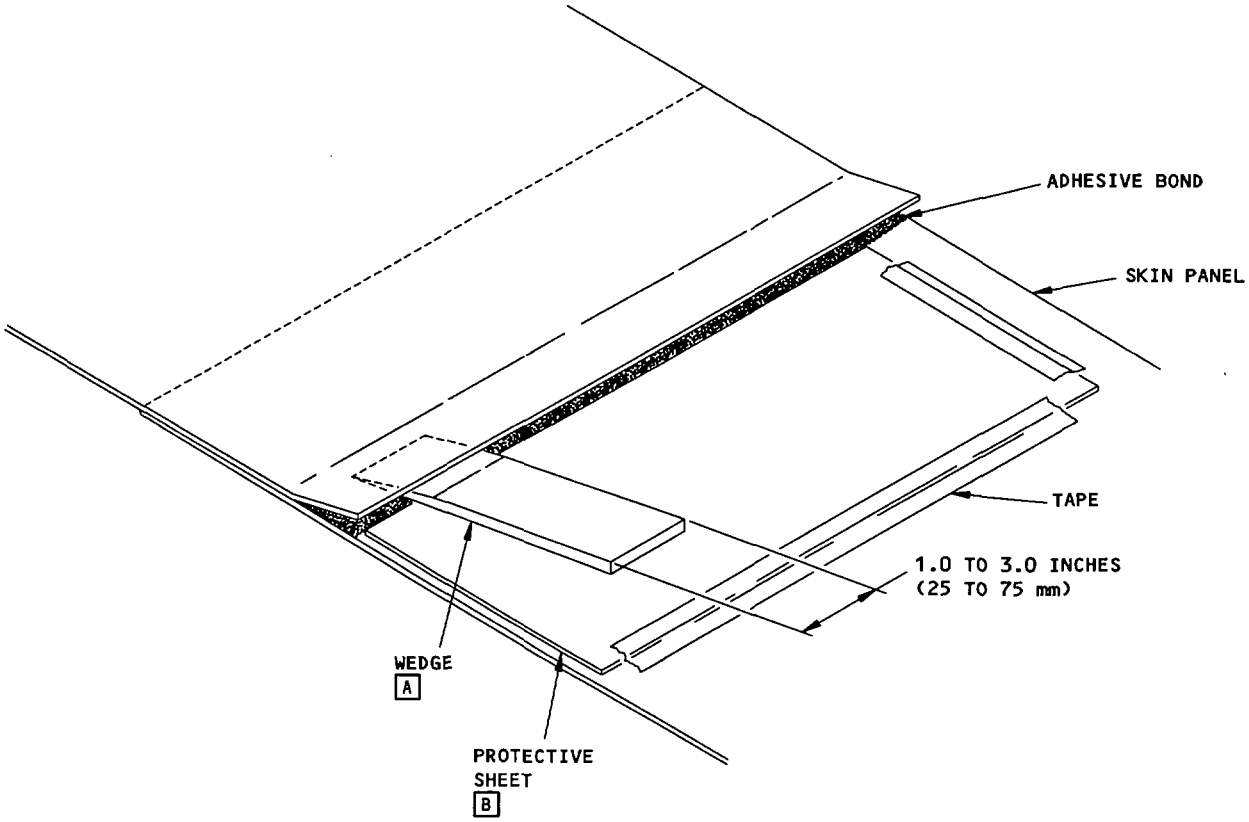

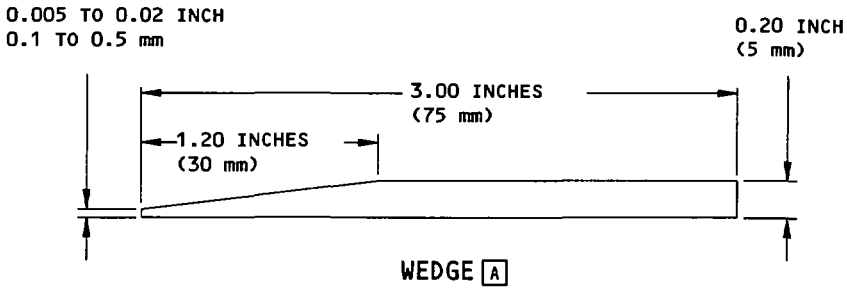

SEPARATION OF THE BONDED PARTS WITH WEDGES

DETAIL I

NOTES

A WOOD OR PLASTIC ARE EXAMPLE MATERIALS

B METAL OR PLASTIC ARE EXAMPLE MATERIALS

Damage Removal Procedures
Figure 3 (Sheet 1)

BOEING PROPRIETARY - Copyright © - Unpublished Work - See title page for details.

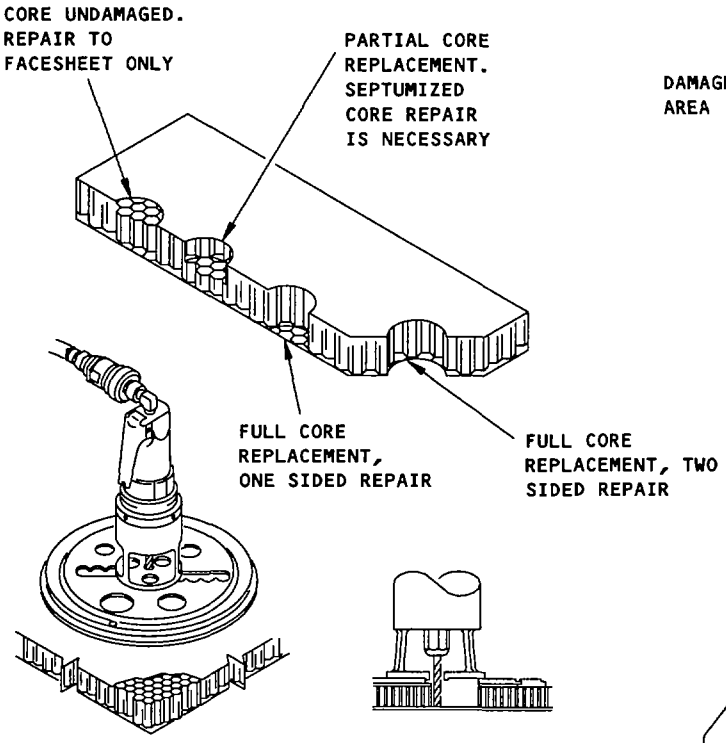

HONEYCOMB CORE REMOVAL

DETAIL II

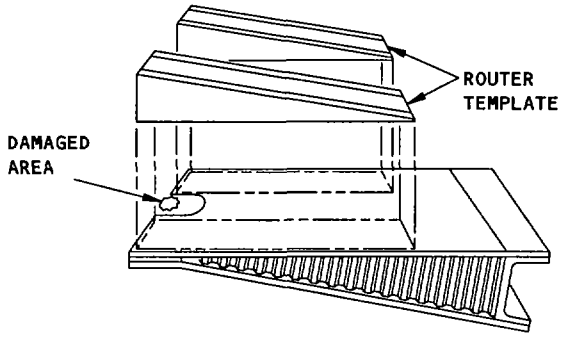

REMOVING HONEYCOMB CORE FROM A TAPERED CONTROL SURFACE

DETAIL III

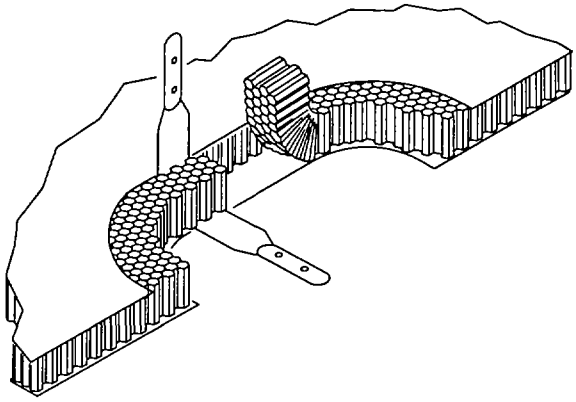

REMOVAL OF CORE WITH CORE KNIFE

DETAIL IV

INSTRUCTIONS

1. REMOVE THE FACE SHEET AND/OR CORE WITH A POWER ROUTER, USING A ROUTER TEMPLATE TO PROTECT THE UNDAMAGED PART OF THE FACE SHEET. REFER TO SRM 51-10-1 FOR INSTRUCTIONS ON THE USE OF A ROUTER AND TEMPLATE

   NOTE: THE ROUTER CAN BE ADJUSTED TO REMOVE: ONE OF THE FACE SHEETS ONLY, A FACE SHEET AND PART OF THE CORE, A FACE SHEET AND ALL OF THE CORE, OR BOTH THE FACE SHEETS AND CORE. SEE DETAIL II.

2. IF YOU ARE ROUTING A TAPERED PART, YOU CAN USE WEDGE SHAPED ROUTER TEMPLATES. THIS WILL PERMIT THE ROUTER TO CUT THE CORE MATERIAL PARALLEL WITH THE LOWER SURFACE. SEE DETAIL III.

3. IT IS PERMITTED TO REMOVE HONEYCOMB CORE WITH A CORE KNIFE. SEE DETAIL IV.

Damage Removal Procedures
Figure 3 (Sheet 2)

BOEING PROPRIETARY - Copyright © - Unpublished Work - See title page for details.

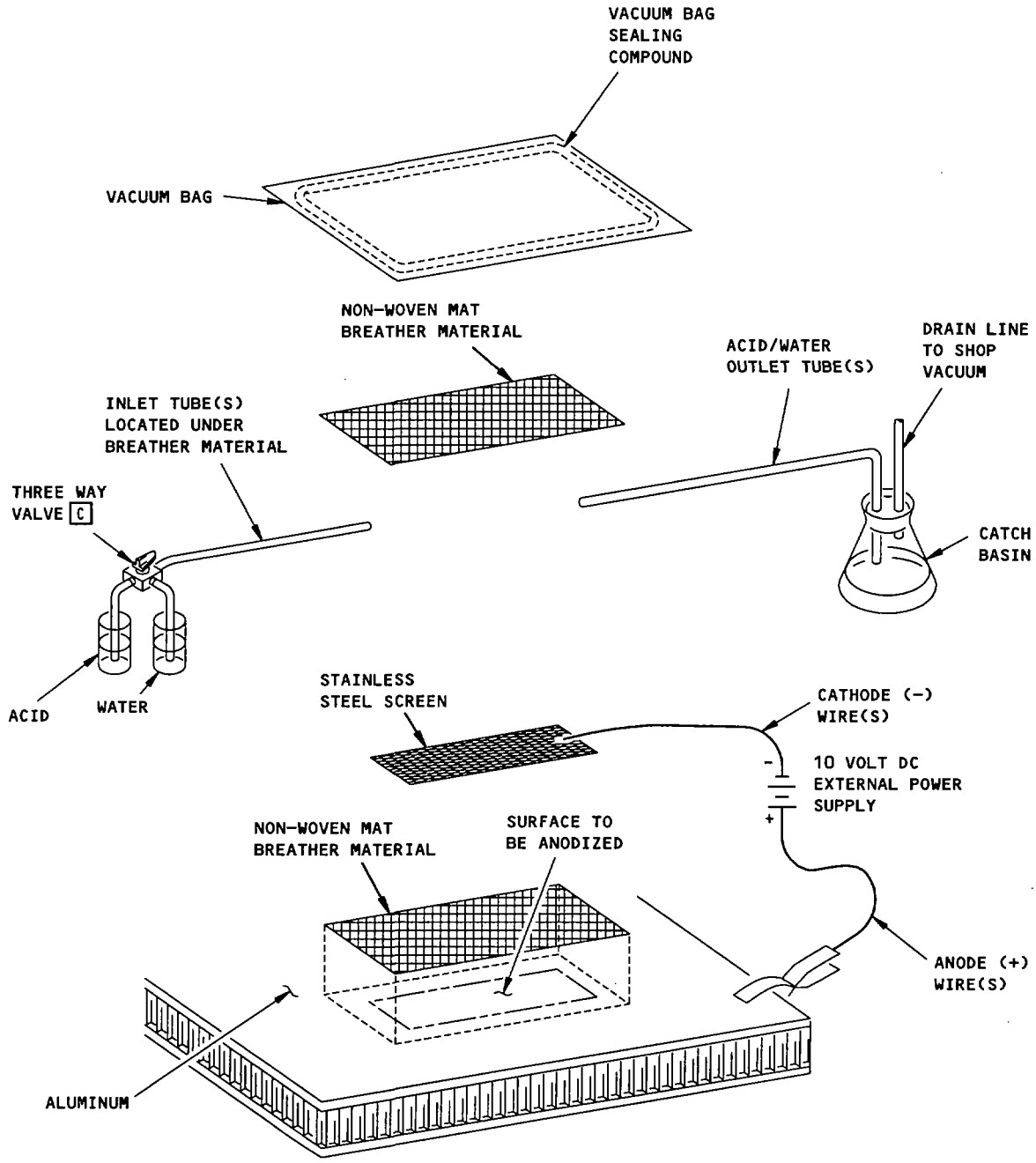

ONE VACUUM BAG SYSTEM A

DETAIL I

Phosphoric Acid Containment System (PACS)
Figure 4 (Sheet 1)

BOEING PROPRIETARY - Copyright © - Unpublished Work - See title page for details.

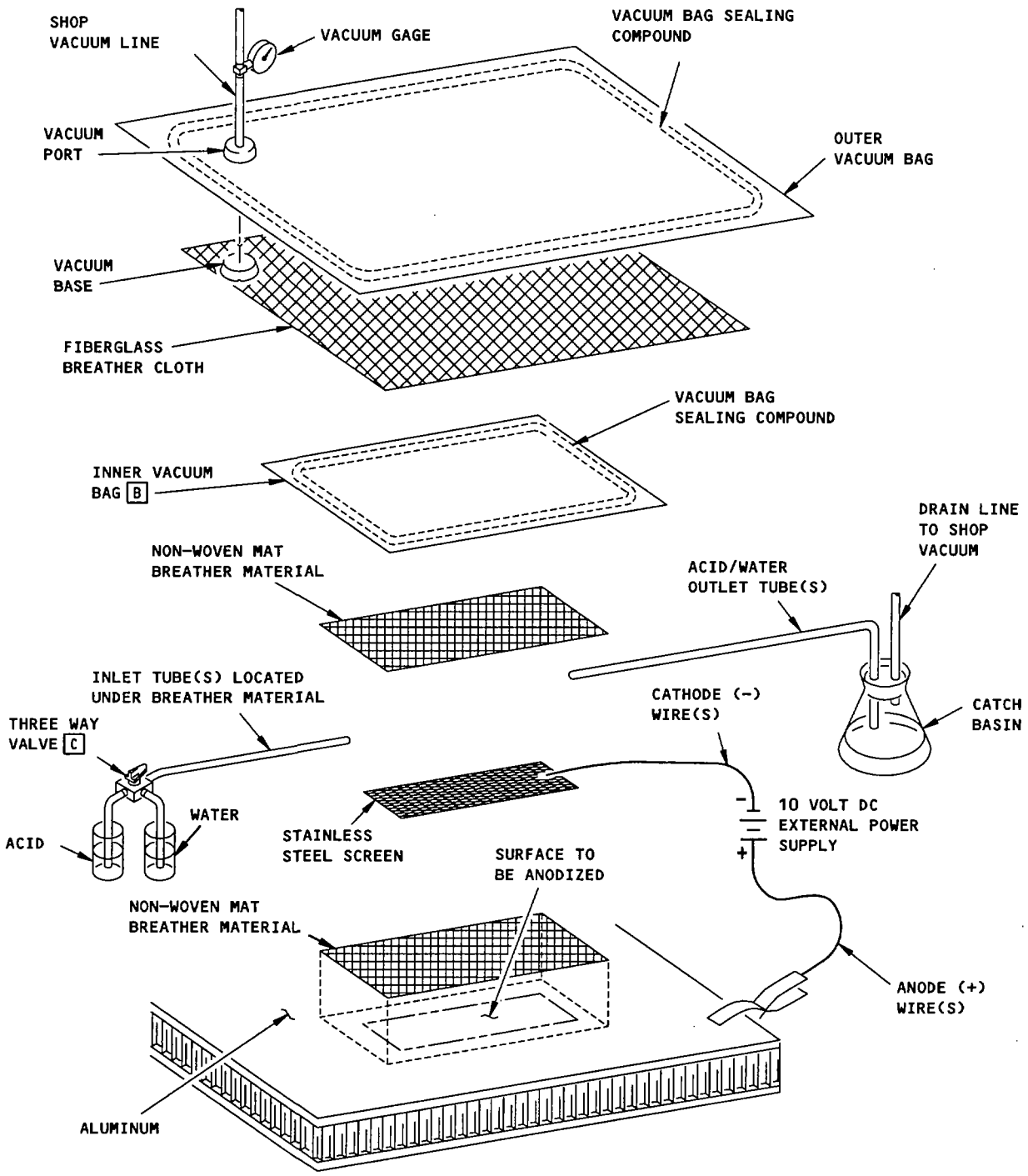

TWO VACUUM BAG SYSTEM A

DETAIL II

Phosphoric Acid Containment System (PACS)
Figure 4 (Sheet 2)

BOEING PROPRIETARY - Copyright © - Unpublished Work - See title page for details.

NOTES

A. WHEN THE SURFACE TO BE ANODIZED IS FACE UP (AS SHOWN IN THIS FIGURE), THE SECOND, OUTER VACUUM BAG IS OPTIONAL. IF THE SURFACE TO BE ANODIZED IS FACE DOWN OR IF THE SURFACE IS VERTICAL, THEN BOEING RECOMMENDS THAT YOU USE AN OUTER VACUUM BAG. THE OUTER VACUUM BAG WILL CONTAIN THE ACID IF THERE IS LEAKAGE FROM THE INNER VACUUM BAG. SEE DETAIL I FOR THE ONE VACUUM BAG SYSTEM, SEE DETAIL II FOR THE TWO VACUUM BAG SYSTEM.

B. AFTER YOU ARE FINISHED WITH THE PACS PROCEDURE, DO A CHECK FOR ACID LEAKAGE BEFORE YOU REMOVE THE INNER VACUUM BAG. IF THERE WAS ACID LEAKAGE, RINSE AND REMOVE ALL OF THE ACID AND OTHER CONTAMINATION FROM THE ALUMINUM FIRST.
THEN REMOVE THE INNER VACUUM BAG.

C. THE THREE-WAY VALVE OPERATION MUST PERMIT THE CONDITIONS THAT FOLLOW:

- NO FLOW (OFF)
- FLOW OF ACID ONLY
- FLOW OF RINSE WATER ONLY

Phosphoric Acid Containment System (PACS)
Figure 4 (Sheet 3)

BOEING PROPRIETARY - Copyright © - Unpublished Work - See title page for details.

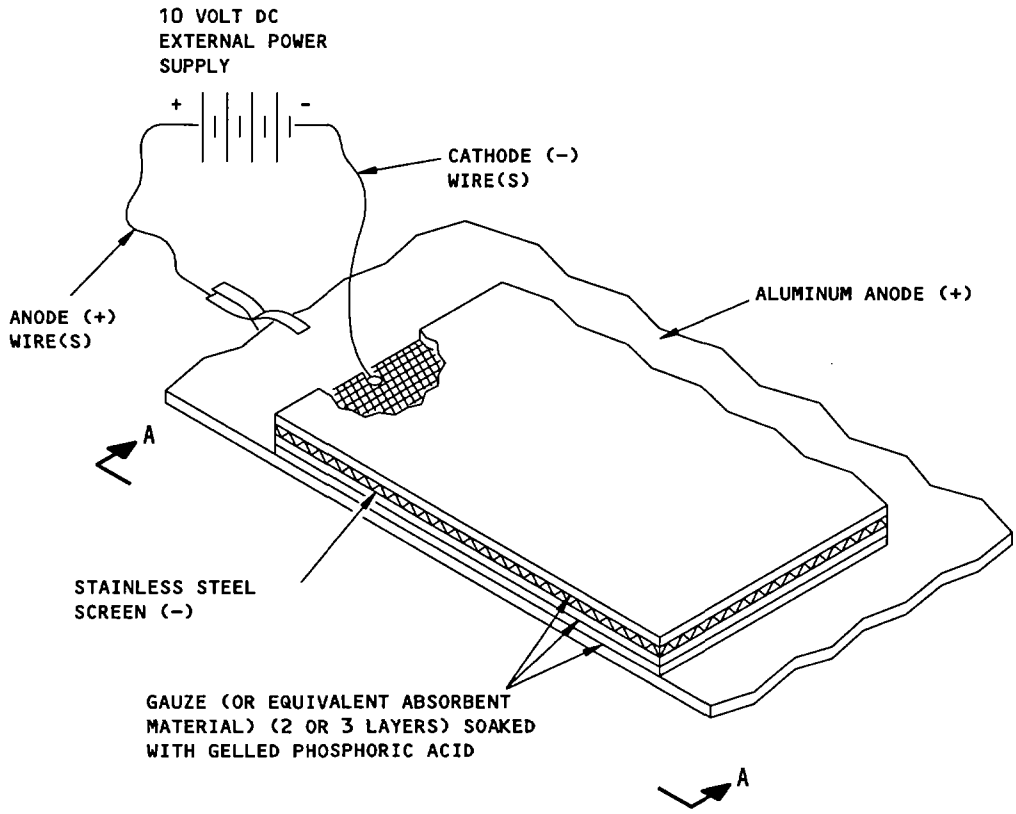

TYPICAL PANTA LAYUP (DAM NOT SHOWN)
DETAIL I

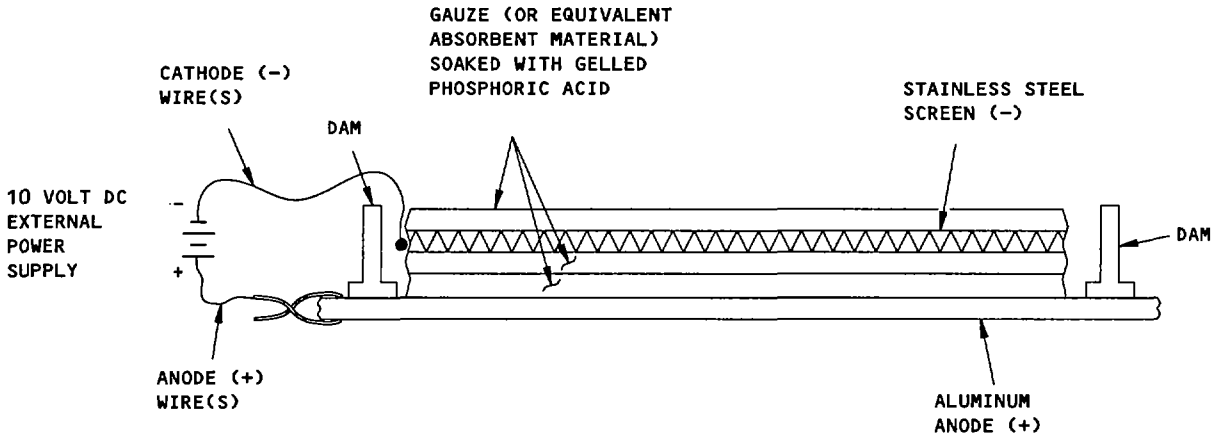

SECTION A-A

Phosphoric Acid Non-Tank Anodize (PANTA) Layup
Figure 5

BOEING PROPRIETARY - Copyright © - Unpublished Work - See title page for details.

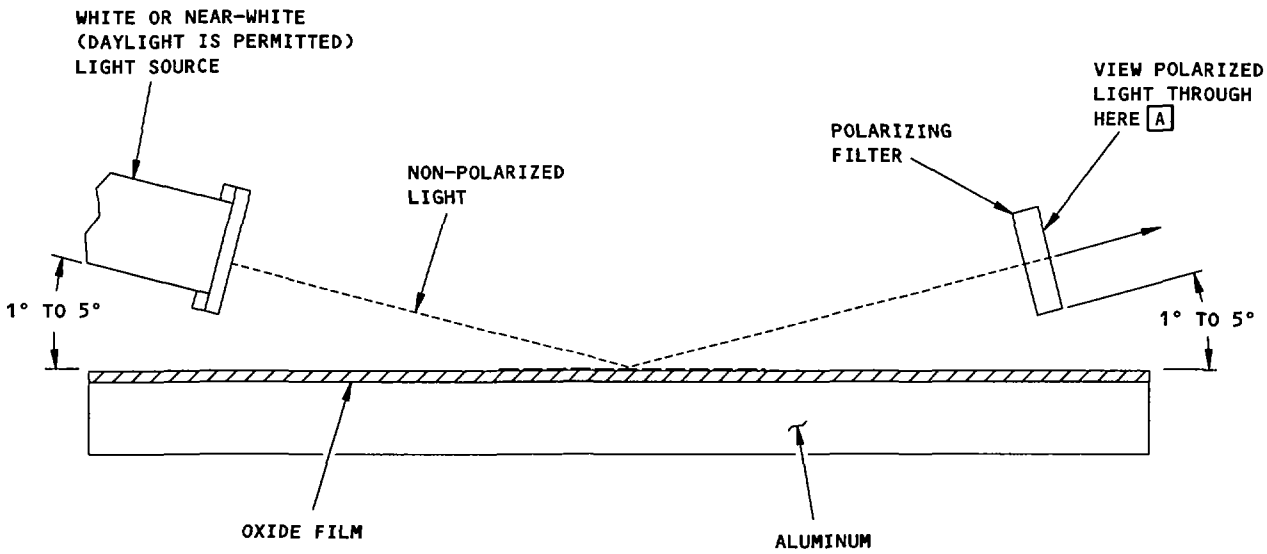

NOTES

A VIEW THE LIGHT AS YOU ROTATE (TURN) THE FILTER 90° TO INSPECT FOR A COLOR CHANGE

Polarized Light Test - Verification of Anodic Oxide Film
Figure 6

BOEING PROPRIETARY - Copyright © - Unpublished Work - See title page for details.

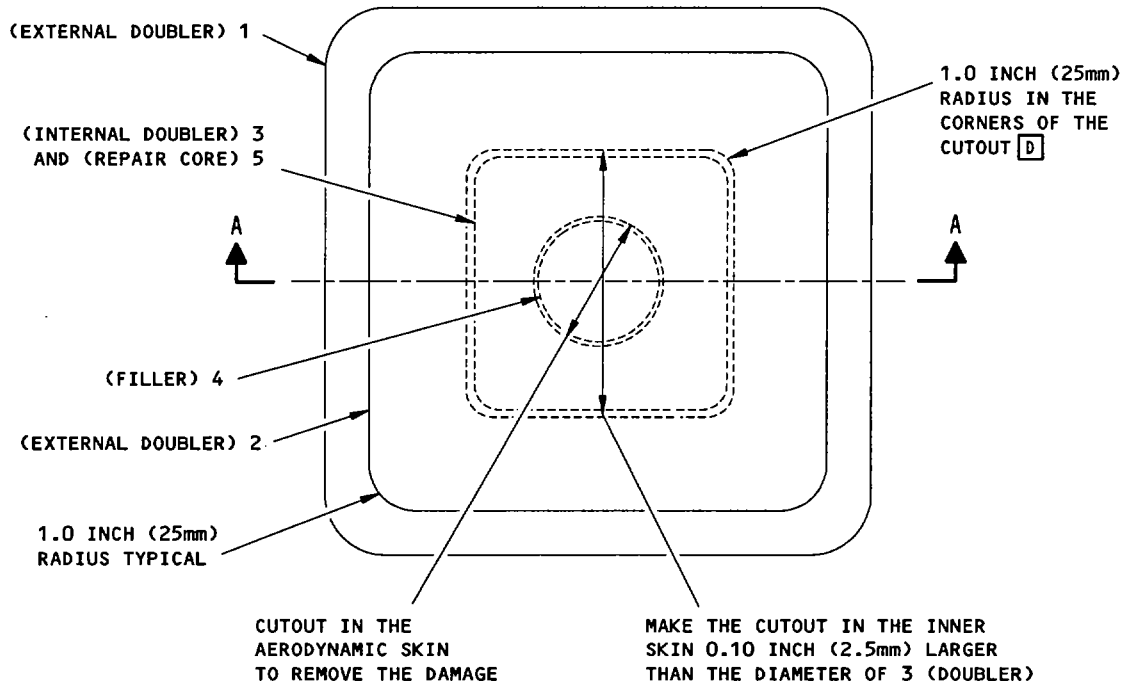

DETAIL I

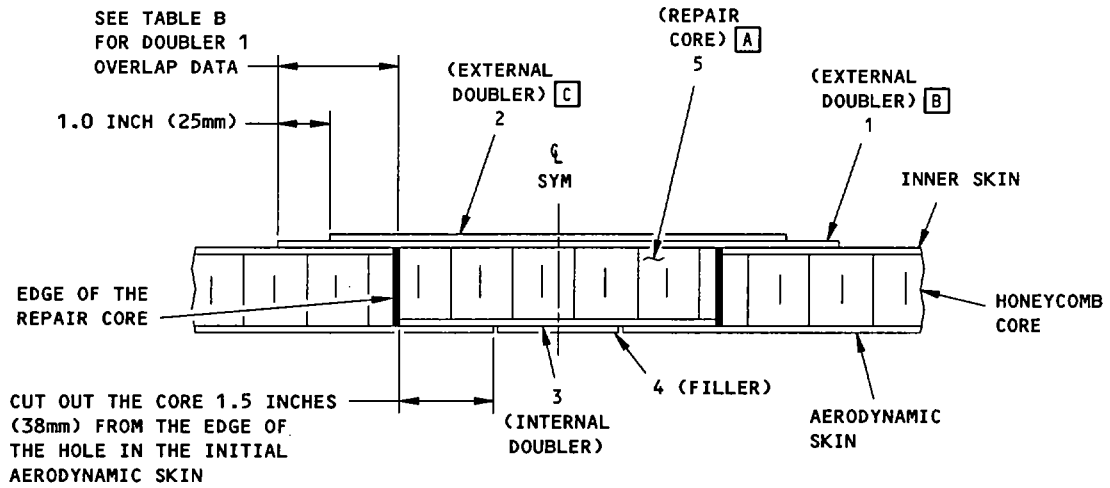

SECTION A-A

Repair Doubler Specifications for Flush Repairs
Figure 7 (Sheet 1)

BOEING PROPRIETARY - Copyright © - Unpublished Work - See title page for details.

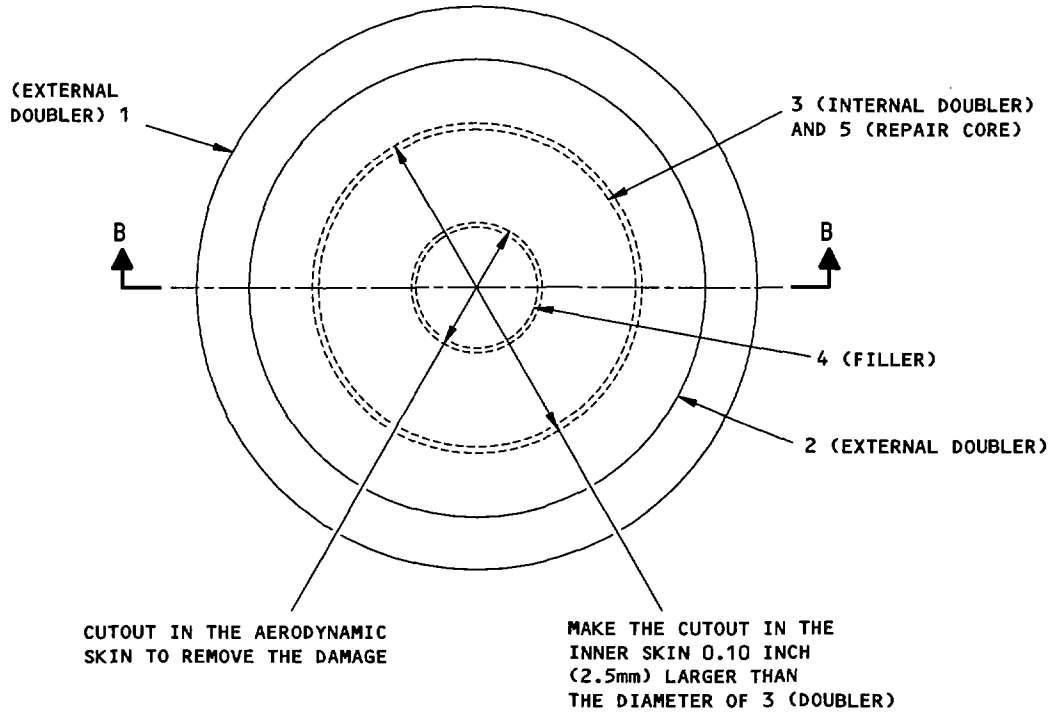

DETAIL II

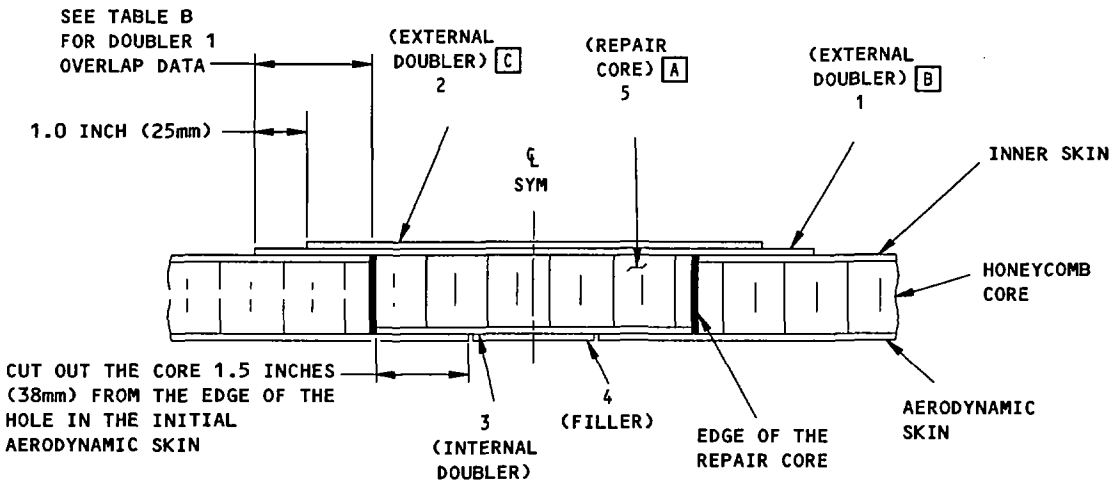

SECTION B-B

Repair Doubler Specifications for Flush Repairs
Figure 7 (Sheet 2)

BOEING PROPRIETARY - Copyright © - Unpublished Work - See title page for details.

REPAIR PART THICKNESS (INCHES) FOR BONDED REPAIRS				
INITIAL SKIN GAGE RANGE	PART 1 EXTERNAL DOUBLER	PART 2 EXTERNAL DOUBLER	PART 3 INTERNAL DOUBLER	PART 4 FILLER
0.012 TO 0.020	SAME AS THE INITIAL SKIN	NOT NECESSARY		
0.021 TO 0.025	0.025 [B]	[B]		
0.026 TO 0.032	0.032 [B] [E]	[B]		
0.033 TO 0.041	0.016	0.025	SAME AS THE AERODYNAMIC SKIN	SAME AS THE AERODYNAMIC SKIN
0.042 TO 0.045	0.020	0.025		
0.046 TO 0.050	0.025	0.025		
0.051 TO 0.057	0.025	0.032 [E]		
0.058 TO 0.064	0.032 [E]	0.032 [E]		
0.065 TO 0.072	0.032 [E]	0.040 [E]		
0.073 TO 0.080	0.040 [E]	0.040 [E]		

TABLE I

INITIAL SKIN THICKNESS	THE MINIMUM OVERLAP DIMENSION OF DOUBLER 1
0.00 TO 0.032	1.5 INCHES (38 mm)
> 0.032	2.5 INCHES (63 mm)

TABLE II

REPAIR PART THICKNESS (INCHES) FOR HIGH CURVATURE REPAIRS		
INITIAL SKIN	PART 1 EXTERNAL DOUBLER	PART 2 EXTERNAL DOUBLER
0.021 TO 0.028	0.012	0.016
0.029 TO 0.032	0.012	0.020

TABLE III

Repair Doubler Specifications for Flush Repairs
Figure 7 (Sheet 3)

BOEING PROPRIETARY - Copyright © - Unpublished Work - See title page for details.

NOTES

- USE THIS FIGURE TO DETERMINE THE DOUBLER DIMENSIONS ONLY.
- THE MATERIAL FOR THE REPAIR PARTS MUST BE EQUIVALENT TO THE SAME BOEING MATERIAL SPECIFICATION (BMS) AND HEAT TREAT AS THE SKIN TO BE REPAIRED.
- BONDING SURFACES OF 2000 SERIES ALUMINUM DOUBLERS CAN BE CLAD OR NON-CLAD (BARE). BONDING SURFACES OF 7000 SERIES ALUMINUM DOUBLERS MUST BE NON-CLAD (BARE).

[A] MAKE THE PART 5 REPAIR CORE LEVEL WITH THE OUTER SURFACE OF THE SKIN TO BE REPAIRED. (UNLESS SPECIFIED DIFERENTLY IN A SPECIFIC REPAIR).

[B] FOR THE INITIAL SKIN THICKNESSES THAT ARE 0.021 TO 0.032 GAGE, THE PART 2 (EXTERNAL DOUBLER) IS NOT NECESSARY IF THE SKIN IS FLAT, OR IF THE PART 1 DOUBLER CAN TOUCH ALL OF THE BOND SURFACE WITH ONLY LIGHT FINGER PRESSURE.

IF THE SKIN SURFACE HAS A HIGH CURVATURE, YOU CAN DO ONE OF THE STEPS THAT FOLLOW:

- MAKE THE PART 1 DOUBLER TO THE SAME CURVATURE AS THE SKIN SURFACE, SO THAT LIGHT FINGER PRESSURE MAKES THE DOUBLER TOUCH ALL OF THE SKIN SURFACE, OR
- MAKE THE PART 1 DOUBLER FROM 0.012 GAGE, AND MAKE THE PART 2 DOUBLER FROM THE THICKNESS SPECIFIED IN TABLE III.

[C] WHEN YOU USE THE PART 2 (EXTERNAL DOUBLER), MAKE THE PART 2 (EXTERNAL DOUBLER) 1.0 INCH (25 mm) SMALLER ALL AROUND THAN THE PART 1 (EXTERNAL DOUBLER).

[D] IF YOU ARE REPAIRING A CRACK, GOUGE, OR SMALL HOLE, YOU CAN USE A MINIMUM RADIUS THAT IS 0.25 INCH (6 mm).

[E] CHAMFER ALL EDGES OF THE DOUBLER AS SHOWN IN FIGURE 12 FOR DOUBLERS 0.032 GAGE AND THICKER.

Repair Doubler Specifications for Flush Repairs
Figure 7 (Sheet 4)

BOEING PROPRIETARY - Copyright © - Unpublished Work - See title page for details.

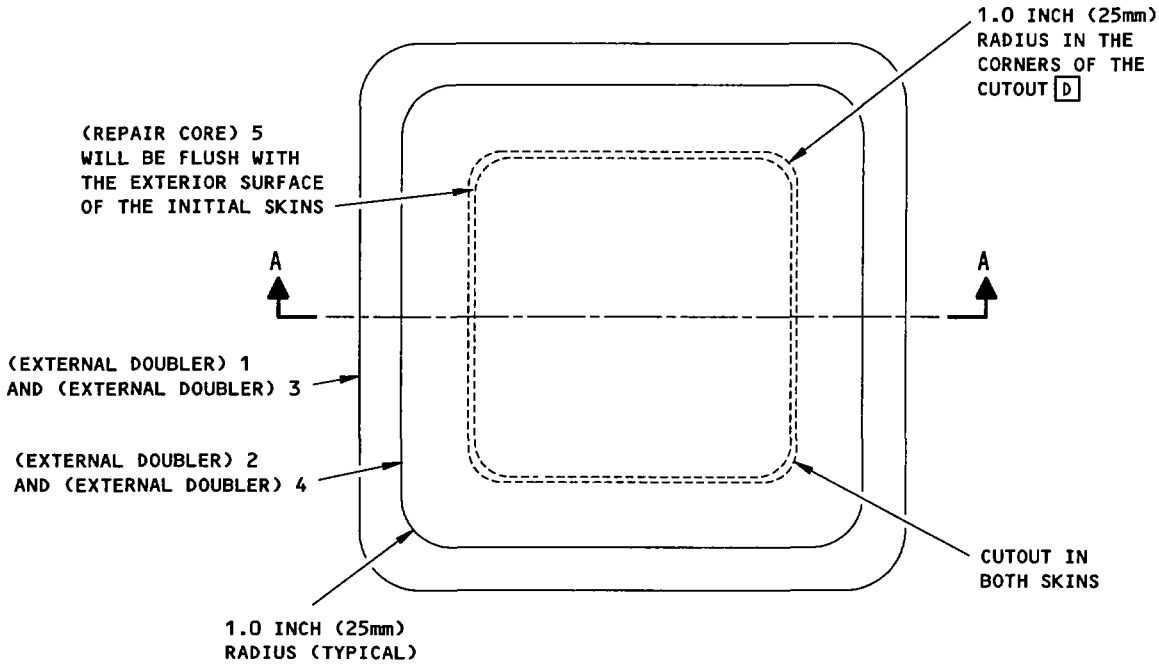

DETAIL I

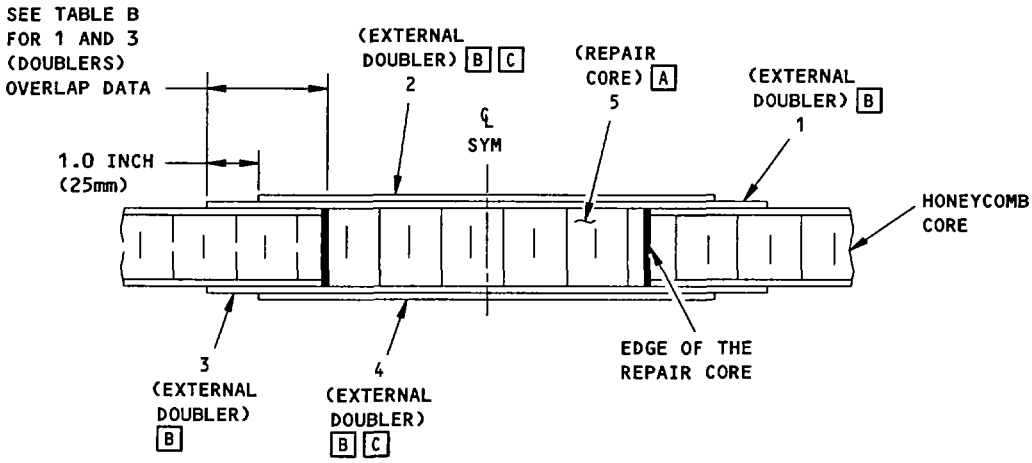

TWO-SIDED REPAIR SHOWN
SEE DETAIL II FOR ONE SIDED REPAIR
SECTION A-A

Repair Doubler Specifications for External Patch Repairs
Figure 8 (Sheet 1)

BOEING PROPRIETARY - Copyright © - Unpublished Work - See title page for details.

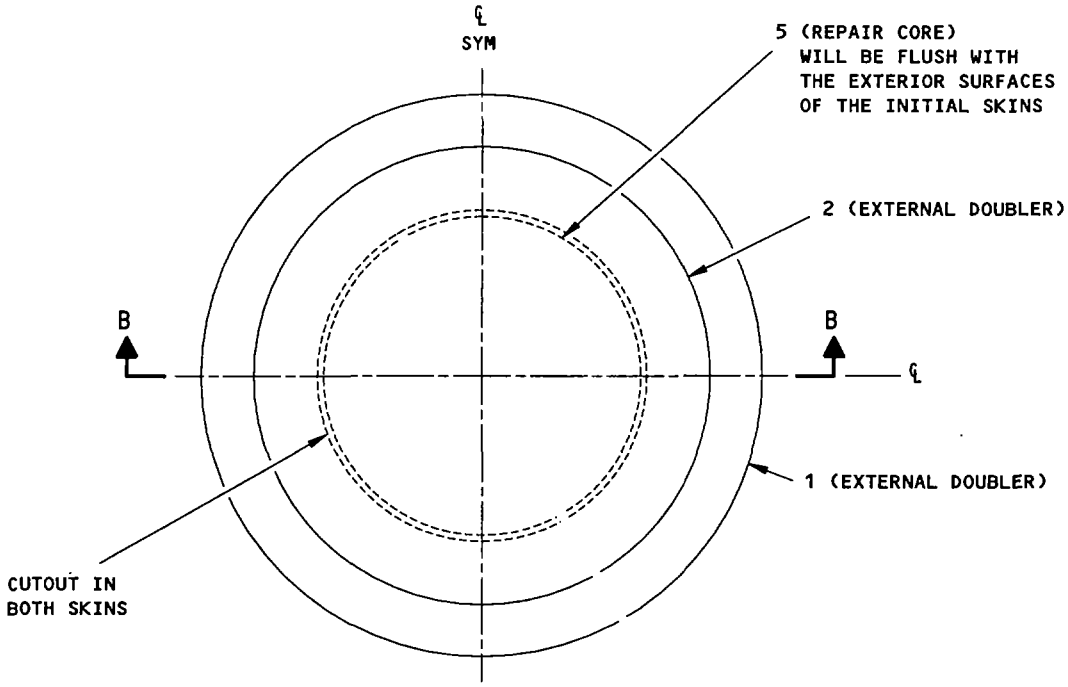

DETAIL II

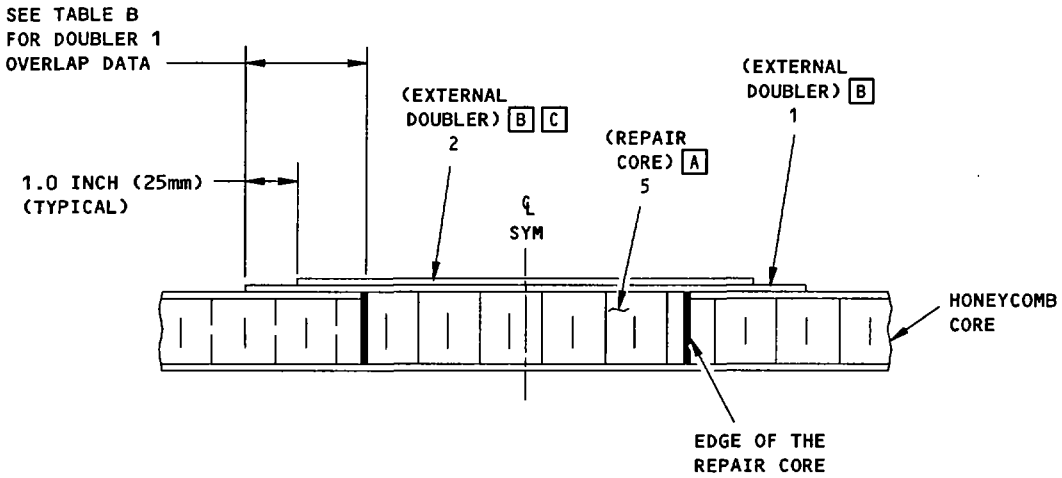

ONE-SIDED REPAIR SHOWN
SEE DETAIL I FOR TWO-SIDED REPAIR
SECTION B-B

Repair Doubler Specifications for External Patch Repairs
Figure 8 (Sheet 2)

BOEING PROPRIETARY - Copyright © - Unpublished Work - See title page for details.

REPAIR PART THICKNESS (INCHES) FOR BONDED REPAIRS		
INITIAL SKIN GAGE RANGE	PART 1 AND 3 DOUBLER	PART 2 AND 4 DOUBLER
0.012 TO 0.020	SAME AS THE INITIAL SKIN	NOT NECESSARY
0.021 TO 0.025	0.025 [B]	[B]
0.026 TO 0.032	0.032 [B] [E]	[B]
0.033 TO 0.041	0.016	0.025
0.042 TO 0.045	0.020	0.025
0.046 TO 0.050	0.025	0.025
0.051 TO 0.057	0.025	0.032 [E]
0.058 TO 0.064	0.032 [E]	0.032 [E]
0.065 TO 0.072	0.032 [E]	0.040 [E]
0.073 TO 0.080	0.040 [E]	0.040 [E]

TABLE I

INITIAL SKIN THICKNESS	THE MINIMUM OVERLAP DIMENSION OF DOUBLERS 1 AND 3
0.00 TO 0.032	1.5 INCHES (38mm)
> 0.032	2.5 INCHES (63mm)

TABLE II

REPAIR PART THICKNESS (INCHES) FOR HIGH CURVATURE REPAIRS		
INITIAL SKIN	PART 1 AND 3 DOUBLER	PART 2 AND 4 DOUBLER
0.021 TO 0.028	0.012	0.016
0.029 TO 0.032	0.012	0.020

TABLE III

Repair Doubler Specifications for External Patch Repairs
Figure 8 (Sheet 3)

BOEING PROPRIETARY - Copyright © - Unpublished Work - See title page for details.

NOTES

- USE THIS FIGURE TO DETERMINE THE DOUBLER DIMENSIONS ONLY.
- THE MATERIAL FOR THE REPAIR PARTS MUST BE EQUIVALENT TO THE SAME BOEING MATERIAL SPECIFICATION (BMS) AND HEAT TREAT AS THE SKIN TO BE REPAIRED.
- BONDING SURFACES OF 2000 SERIES ALUMINUM DOUBLERS CAN BE CLAD OR NON-CLAD (BARE). BONDING SURFACES OF 7000 SERIES ALUMINUM DOUBLERS MUST BE NON-CLAD (BARE).

[A] MAKE THE PART 5 REPAIR CORE TO BE LEVEL WITH THE OUTER SURFACE OF THE SKIN TO BE REPAIRED (UNLESS SPECIFIED DIFFERENTLY IN A SPECIFIC REPAIR).

[B] FOR THE INITIAL SKIN THICKNESSES THAT ARE BETWEEN 0.021 AND 0.032 GAGE, THE PARTS 2 AND 4 DOUBLERS ARE NOT NECESSARY IF THE INITIAL SKIN IS FLAT OR IF THE PARTS 1 AND 3 DOUBLERS CAN TOUCH ALL OF THE BOND SURFACE WITH ONLY LIGHT FINGER PRESSURE.

IF THE SKIN SURFACE HAS A HIGH CURVATURE, YOU CAN DO ONE OF THE STEPS THAT FOLLOW:

- MAKE THE PARTS 1 AND 3 DOUBLERS TO THE SAME CURVATURE AS THE SKIN SURFACE, SO THAT LIGHT FINGER PRESSURE MAKES THE DOUBLERS TOUCH ALL OF THE SKIN SURFACE, OR
- MAKE THE PARTS 1 AND 3 DOUBLERS FROM 0.012 GAGE, AND MAKE THE PARTS 2 AND 4 DOUBLERS FROM THE THICKNESS SPECIFIED IN TABLE III.

[C] WHEN YOU USE THE PART 2 AND 4 DOUBLERS, MAKE THE PARTS 2 AND 4 DOUBLERS 1.0 INCH (25 mm) SMALLER ALL AROUND THAN THE PARTS 1 AND 3 DOUBLERS.

[D] IF YOU ARE REPAIRING A CRACK, GOUGE, OR SMALL HOLE, YOU CAN USE A MINIMUM RADIUS THAT IS 0.25 INCH (6 mm).

[E] CHAMFER ALL EDGES OF THE DOUBLER AS SHOWN IN FIGURE 12 FOR DOUBLERS 0.032 GAGE AND THICKER

Repair Doubler Specifications for External Patch Repairs
Figure 8 (Sheet 4

BOEING PROPRIETARY - Copyright © - Unpublished Work - See title page for details.

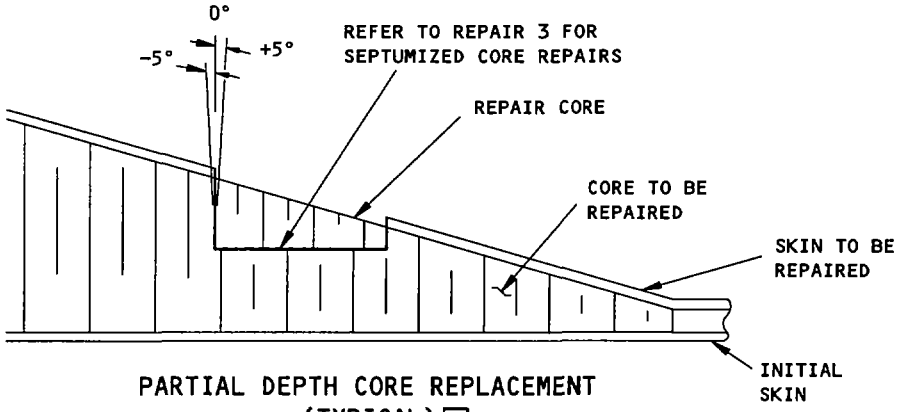

PARTIAL DEPTH CORE REPLACEMENT
(TYPICAL) [A]

DETAIL I

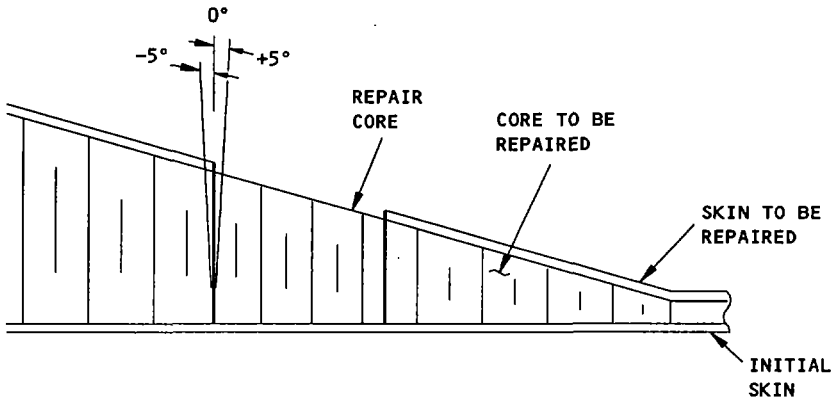

FULL DEPTH CORE REPLACEMENT
(TYPICAL) [A]

DETAIL II

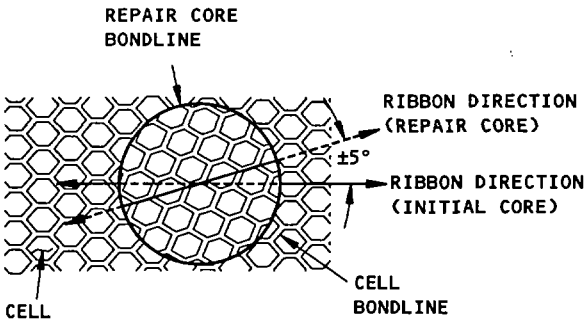

CORE ALIGNMENT

DETAIL III

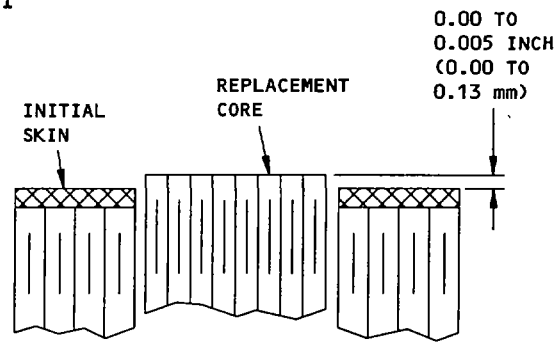

INITIAL CORE HEIGHT
(BEFORE CURE)

DETAIL IV

Installation of the Repair Core
Figure 9 (Sheet 1)

BOEING PROPRIETARY - Copyright © - Unpublished Work - See title page for details.

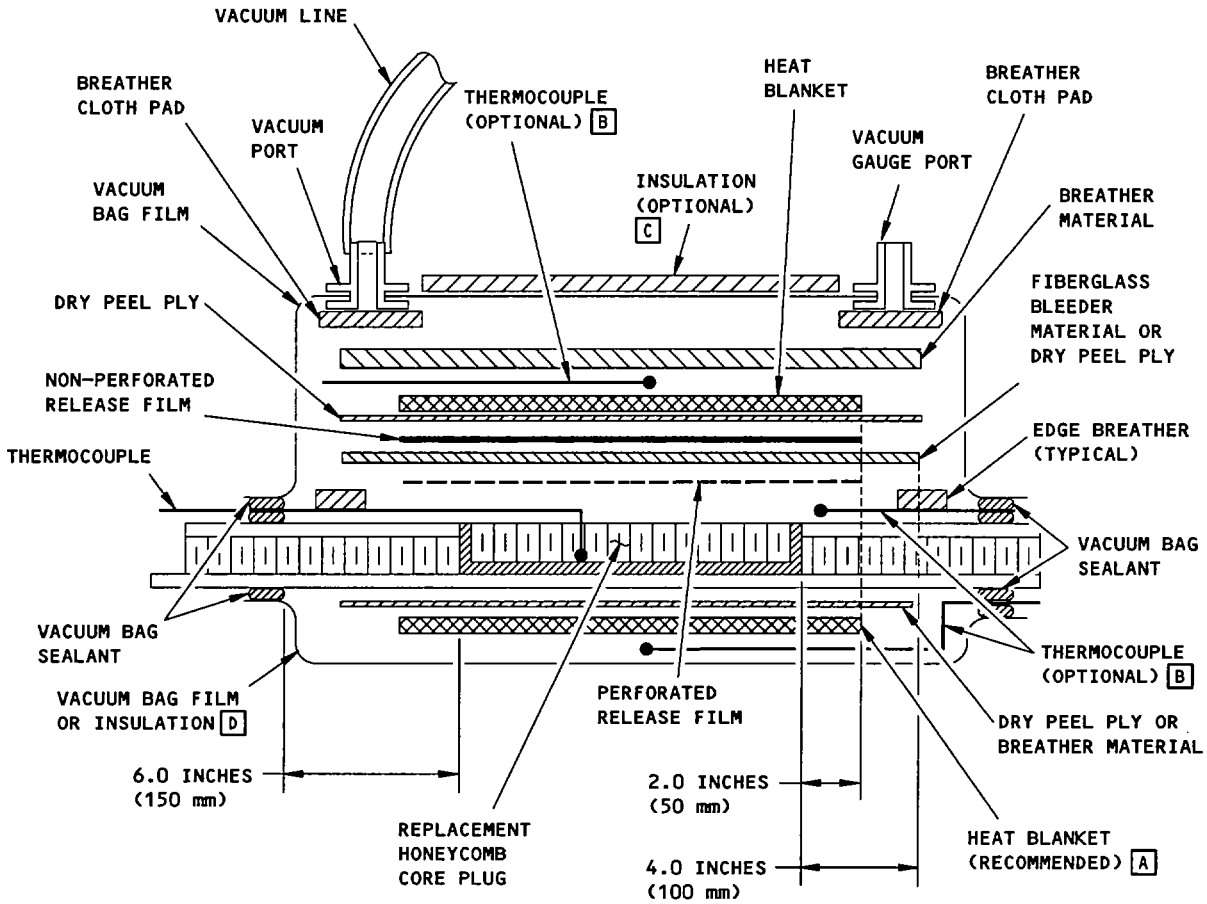

VACUUM BAG PROCEDURE FOR REPLACEMENT CORE
WHEN THE TWO STAGE CURE PROCEDURE IS USED

DETAIL V

NOTES

A MAXIMUM ERROR OF THE CELL WALLS AFTER INSTALLATION OF THE REPAIR CORE.

B YOU CAN USE THESE THERMOCOUPLES TO MAKE SURE THAT IF THE HEAT BLANKET GETS TOO HOT, YOU CAN TURN OFF THE POWER SUPPLY BEFORE YOU DAMAGE THE SKIN PANEL.

C 4-8 PLIES OF BREATHER MATERIAL IS AN EXAMPLE. YOU CAN USE OTHER INSULATION MATERIALS ALSO. THIS WILL KEEP THE HEAT IN THE REPAIR AREA.

D IF YOU USE A HEAT BLANKET ON THE UNDAMAGED SIDE, MAKE SURE THAT THE HEAT BLANKET CAN BE HELD AGAINST THE PART. A VACUUM BAG CAN BE USED TO HOLD THE HEAT BLANKET, OR YOU CAN PUT THE PART ON A TOOL SURFACE (WITH INSULATION
BETWEEN THE HEAT BLANKET AND THE TOOL SURFACE.

Installation of the Repair Core
Figure 9 (Sheet 2)

BOEING PROPRIETARY - Copyright © - Unpublished Work - See title page for details.

CLASS	POT LIFE AT LESS THAN 80°F (27°C)	PARTS BY WEIGHT PART A (BASE)		PARTS BY WEIGHT PART B (HARDENER)
		TYPE I	TYPE V	TYPE I AND V
1	20 MINUTES MAXIMUM	140	49	100
2	60 MINUTES MAXIMUM	140	49	100
3	90 MINUTES MAXIMUM	140	---	100
4	120 MINUTES MAXIMUM	140	---	100

BMS 5-92 TWO-PART PASTE ADHESIVE MIXTURE DATA
TABLE I

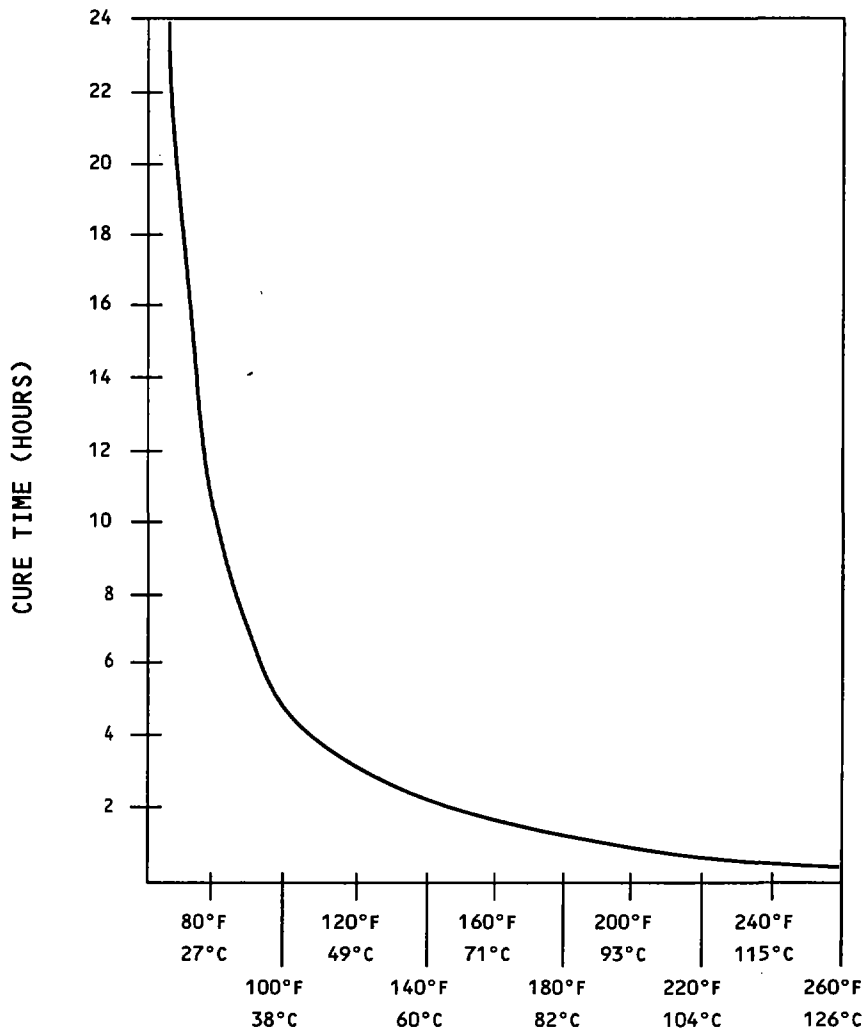

BMS 5-92, TYPE I CURE TEMPERATURE
CHART I

Cure Time for BMS 5-92, Two-part Paste Adhesive
Figure 10 (Sheet 1)

BOEING PROPRIETARY - Copyright © - Unpublished Work - See title page for details.

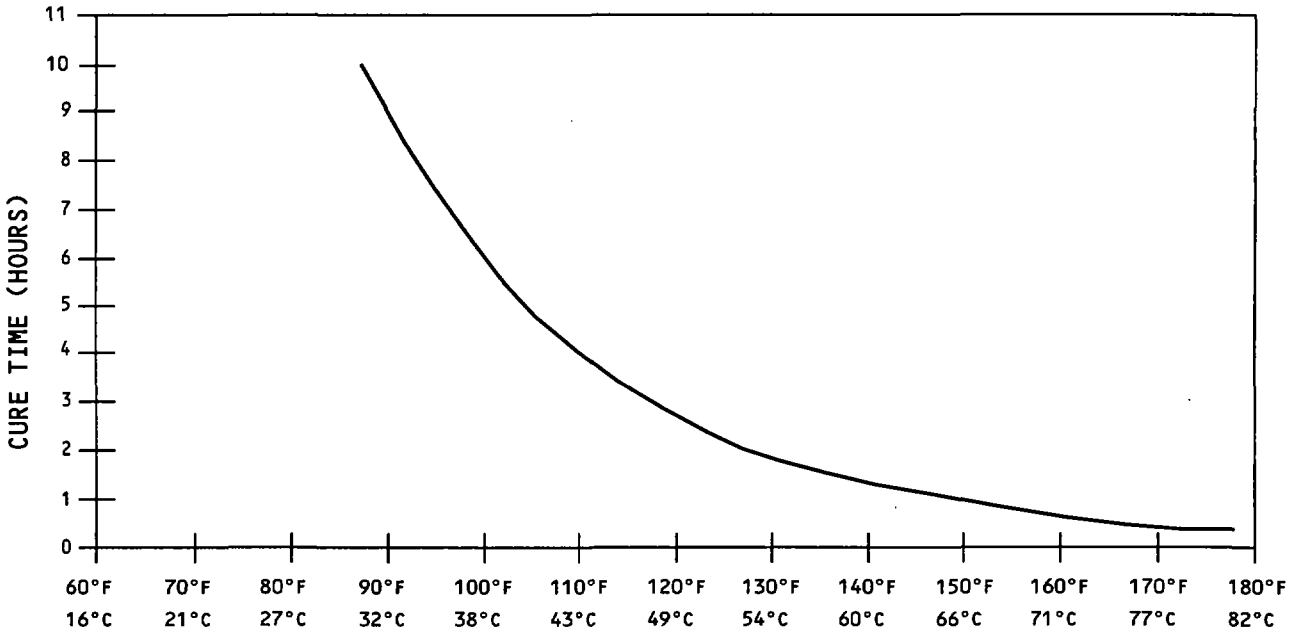

BMS 5-92, TYPE V, CLASS 2 CURE TEMPERATURE
CHART II

NOTES

- IF A TYPE IS NOT SPECIFIED IT IS PREFERRED THAT YOU USE TYPE V.
- CURE UNDER PRESSURE AS FOLLOWS:

  (1) BMS5-92, TYPE V, CLASS 1 ADHESIVE:
  3 HOURS MINIMUM AT 70 TO 100°F (21 TO 38°C), OR
  2 HOURS MINIMUM AT 120 TO 130°F (49 TO 54°C).

  (2) BMS5-92, TYPE V, CLASS 2 ADHESIVE:
  7 HOURS MINIMUM AT 70 TO 100°F (21 TO 38°C) OR SEE CHART II.

Cure Time for BMS 5-92, Two-part Paste Adhesive
Figure 10 (Sheet 2)

BOEING PROPRIETARY - Copyright © - Unpublished Work - See title page for details.

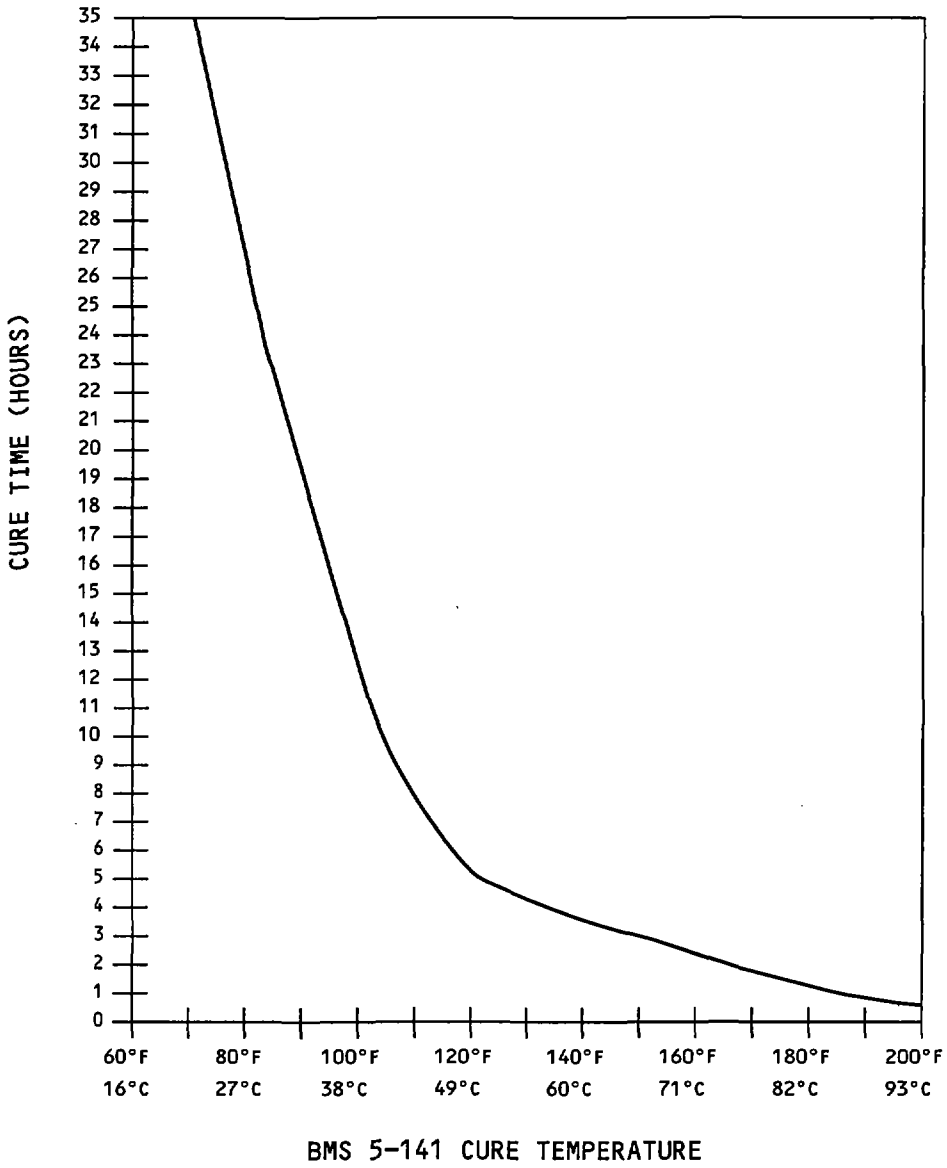

Cure Time for BMS 5-141 Paste Adhesive
Figure 11

BOEING PROPRIETARY - Copyright © - Unpublished Work - See title page for details.

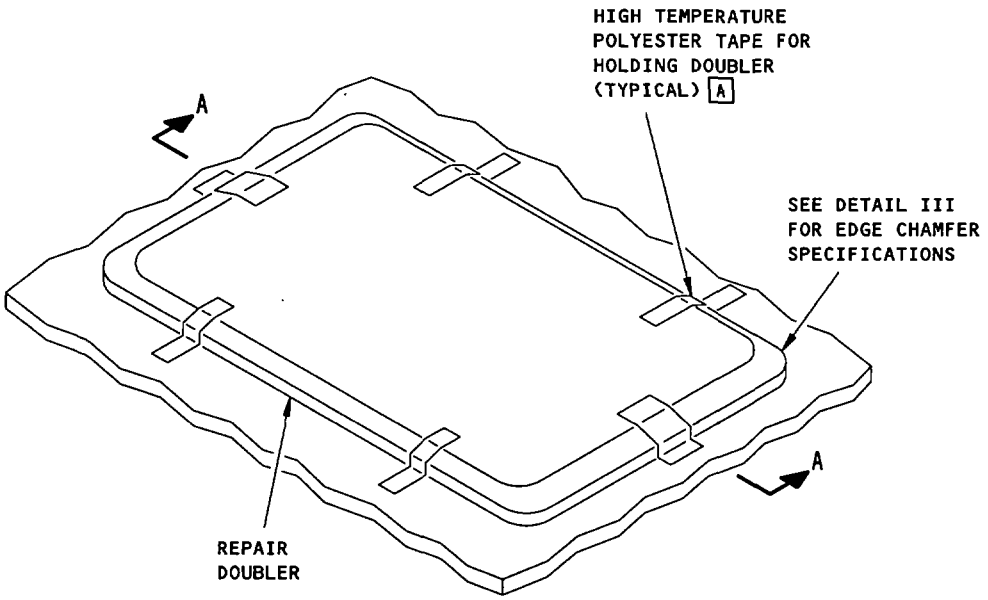

METAL TO METAL
(NO HONEYCOMB)

DETAIL I

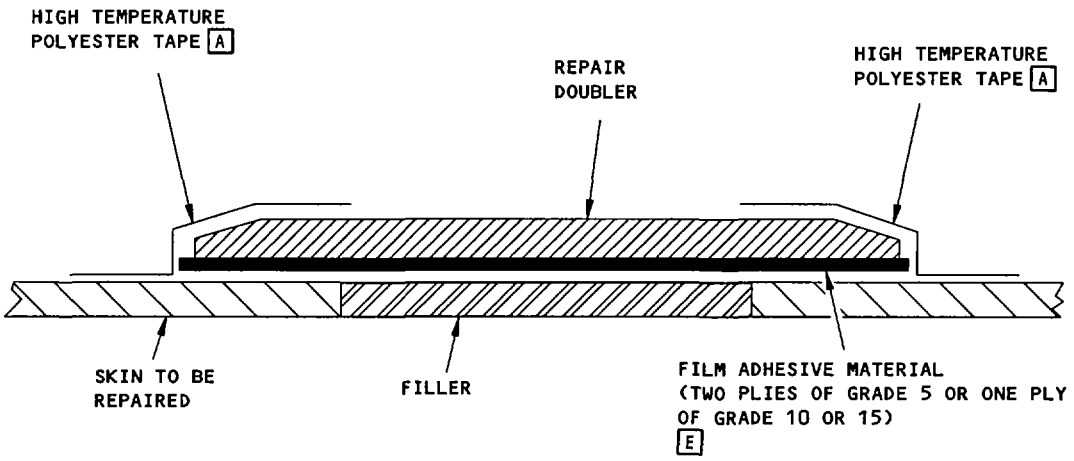

SECTION A-A

Installation of the Repair Doubler
Figure 12 (Sheet 1)

BOEING PROPRIETARY - Copyright © - Unpublished Work - See title page for details.

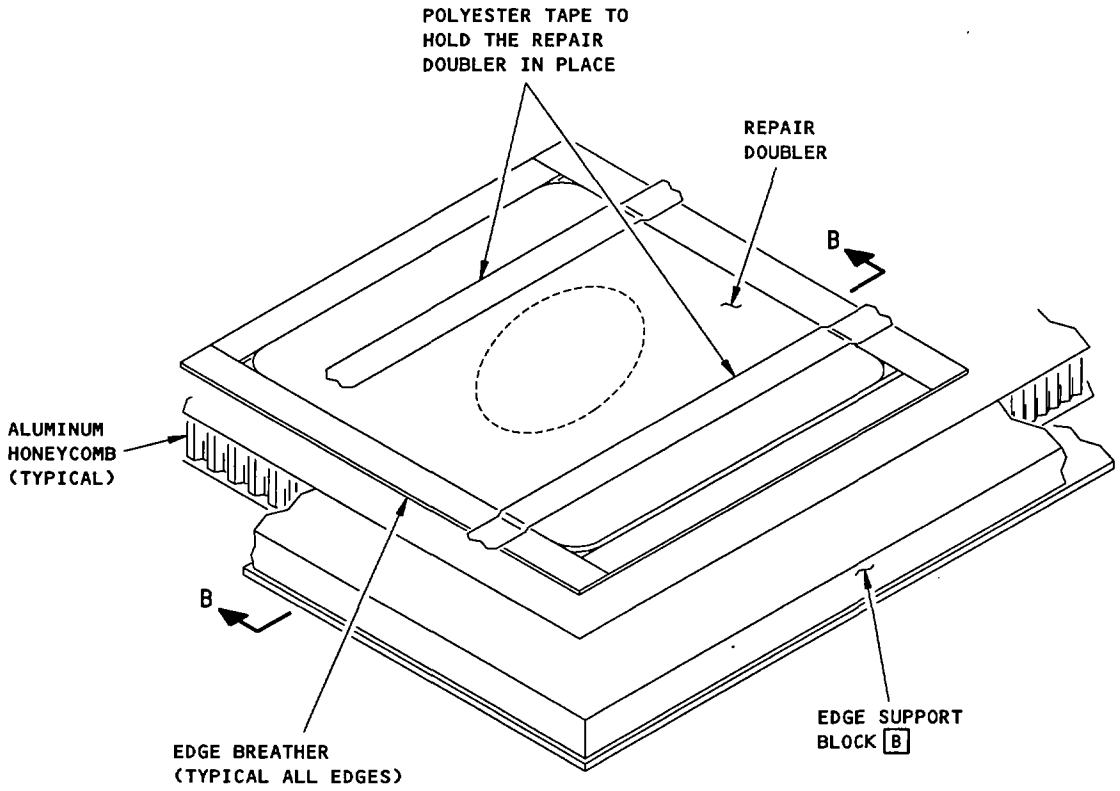

DETAIL II

Installation of the Repair Doubler
Figure 12 (Sheet 2)

BOEING PROPRIETARY - Copyright © - Unpublished Work - See title page for details.

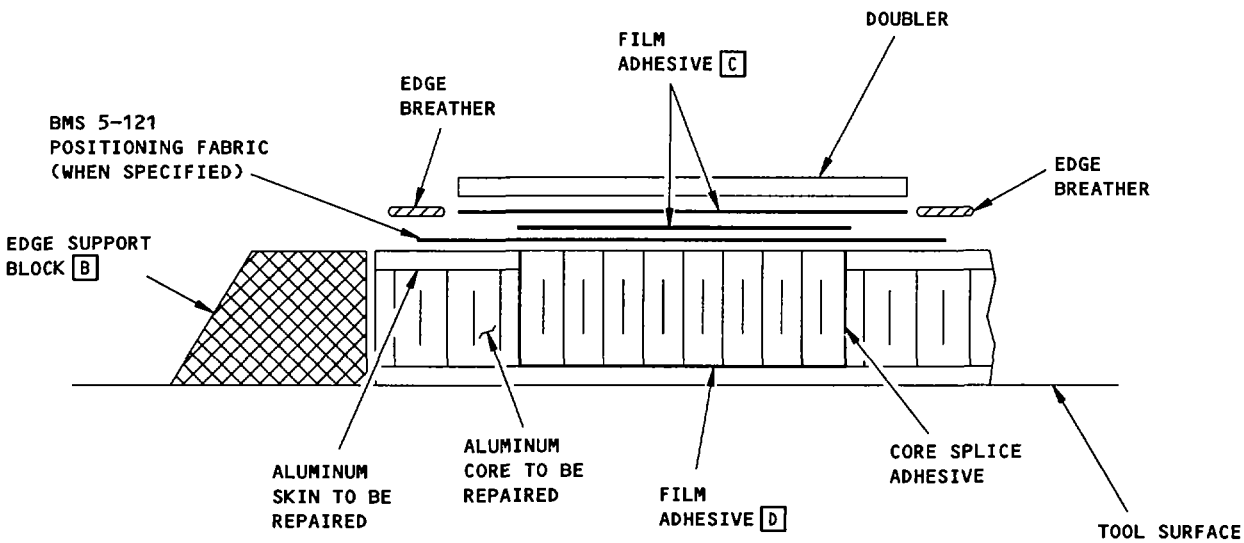

SECTION B-B

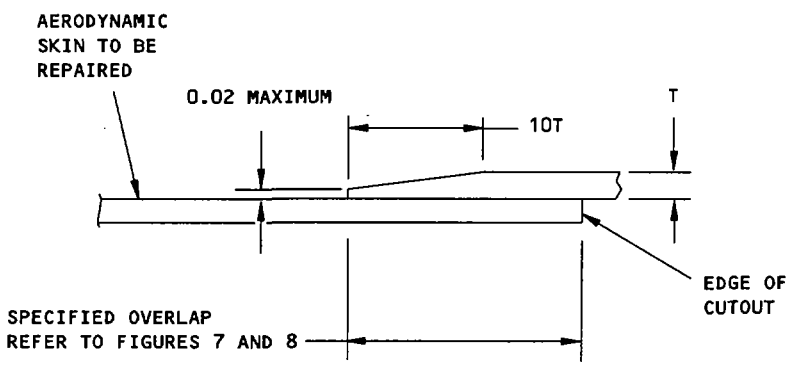

TYPICAL CHAMFERED EXTERNAL PATCH
(GAGE THICKNESS 0.032 AND MORE)
DETAIL III

Installation of the Repair Doubler
Figure 12 (Sheet 3)

BOEING PROPRIETARY - Copyright © - Unpublished Work - See title page for details.

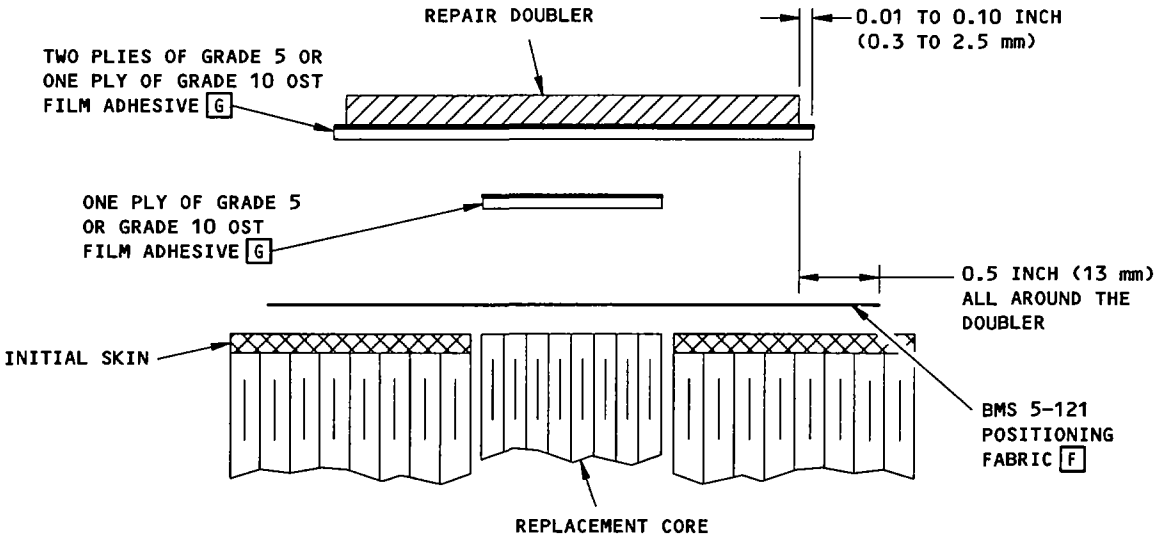

INSTALLATION OF EXTERNAL DOUBLER AND GRADE 5
OR GRADE 10 OST FILM ADHESIVE

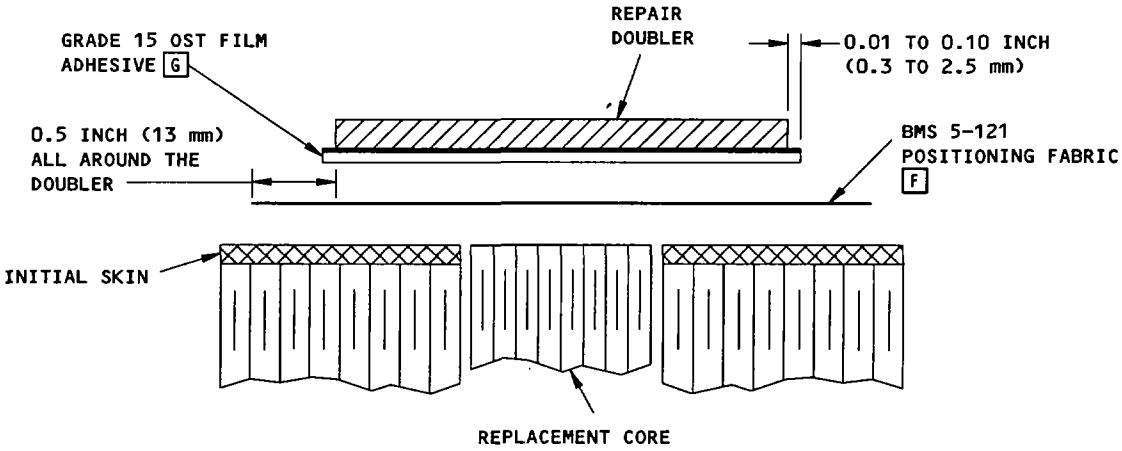

INSTALLATION OF EXTERNAL DOUBLER AND
GRADE 15 OST FILM ADHESIVE E

INSTRUCTIONS TO APPLY ONE-SIDE-TACKY (OST)
FILM ADHESIVE G

DETAIL IV

Installation of the Repair Doubler
Figure 12 (Sheet 4)

BOEING PROPRIETARY - Copyright © - Unpublished Work - See title page for details.

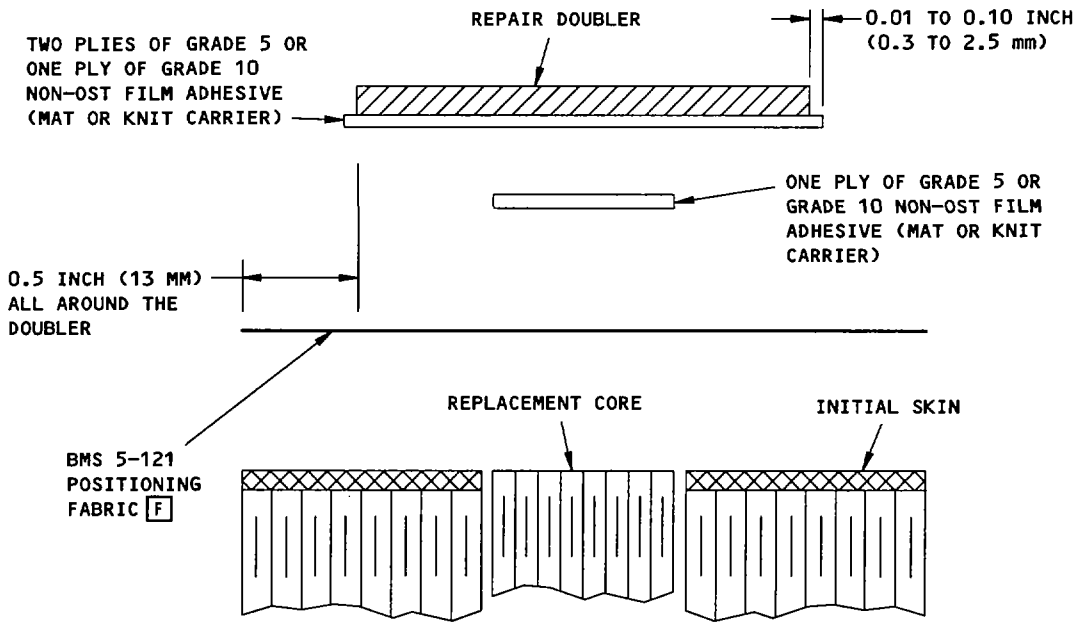

INSTALLATION OF EXTERNAL DOUBLER AND GRADE 5
OR GRADE 10 NON-OST FILM ADHESIVE

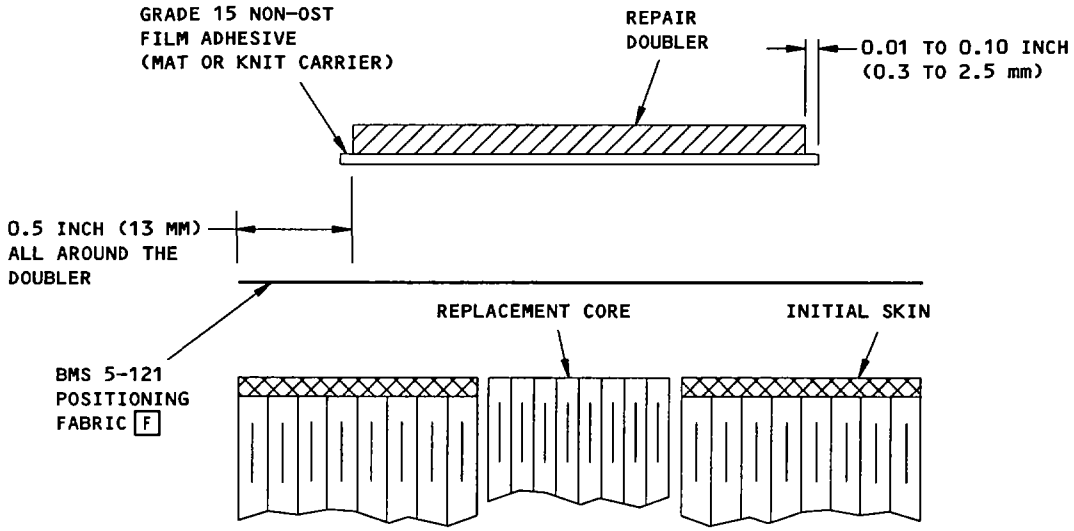

INSTALLATION OF EXTERNAL DOUBLER GRADE 15
NON-OST FILM ADHESIVE E

INSTRUCTIONS TO APPLY NON-OST FILM ADHESIVE
DETAIL V

Installation of the Repair Doubler
Figure 12 (Sheet 5)

BOEING PROPRIETARY - Copyright © - Unpublished Work - See title page for details.

NOTES

- THIS IS APPLICABLE FOR THE FILM ADHESIVE BOND PROCEDURE.
- MAKE SURE THAT ALL SEPARATOR SHEETS ARE REMOVED BEFORE YOU ASSEMBLE THE REPAIR PARTS.

[A] APPLY TAPE TO HOLD THE REPAIR DOUBLER IN POSITION DURING THE CURE. DO NOT SEAL THE EDGES OF THE PANEL. IF YOU SEAL THE EDGES OF THE PANEL WITH TAPE, IT CAN PREVENT THE FLOW OF THE ADHESIVE MATERIAL AND THE REMOVAL OF AIR DURING THE FINAL STAGE OF THE CURE. APPLY LESS THAN 25 PERCENT OF THE EDGE LENGTH OF THE REPAIR DOUBLER WITH TAPE.

[B] ONLY NECESSARY FOR SQUARE EDGED HONEYCOMB PANELS.

[C] USE THREE PLIES OF GRADE 5, TWO PLIES OF GRADE 10 OR ONE PLY OF GRADE 15 BETWEEN THE REPAIR DOUBLER AND THE CORE. IF GRADE 5 OR GRADE 10 IS USED, MAKE THE BOTTOM PLY THE SAME DIMENSIONS AS THE CORE. MAKE THE TOP PLY (PLIES) THE SAME SIZE AS THE THE DOUBLER. SEE DETAIL IV AND DETAIL V.

[D] USE THREE PLIES OF GRADE 5, TWO PLIES OF GRADE 10 OR ONE PLY OF GRADE 15 CUT TO THE SAME DIMENSIONS AS THE HOLE.

[E] DO NOT USE GRADE 15 FILM ADHESIVE IF THE DOUBLER TO BE BONDED IS ≤ 0.020 GAGE

[F] WHEN YOU DO A REPAIR THAT IS NOT CURED IN A PRESSURIZED AUTOCLAVE, USE BMS 5-121 POSITIONING FABRIC ON A SIDE THAT HAS AN EXTERNAL DOUBLER.

[G] IF OST IS INSTALLED WITH BMS 5-121 POSITIONING FABRIC, THEN PUT THE TACKY SIDE DOWN AGAINST THE POSITIONING FABRIC. IF OST IS INSTALLED WITHOUT POSITIONING FABRIC (WHEN THERE IS 64 SQUARE INCHES (400 SQUARE cm) OR LESS OF OPEN CORE) THEN PUT THE MAT SIDE DOWN AGAINST THE OPEN CORE.

Installation of the Repair Doubler
Figure 12 (Sheet 6)

BOEING PROPRIETARY - Copyright © - Unpublished Work - See title page for details.

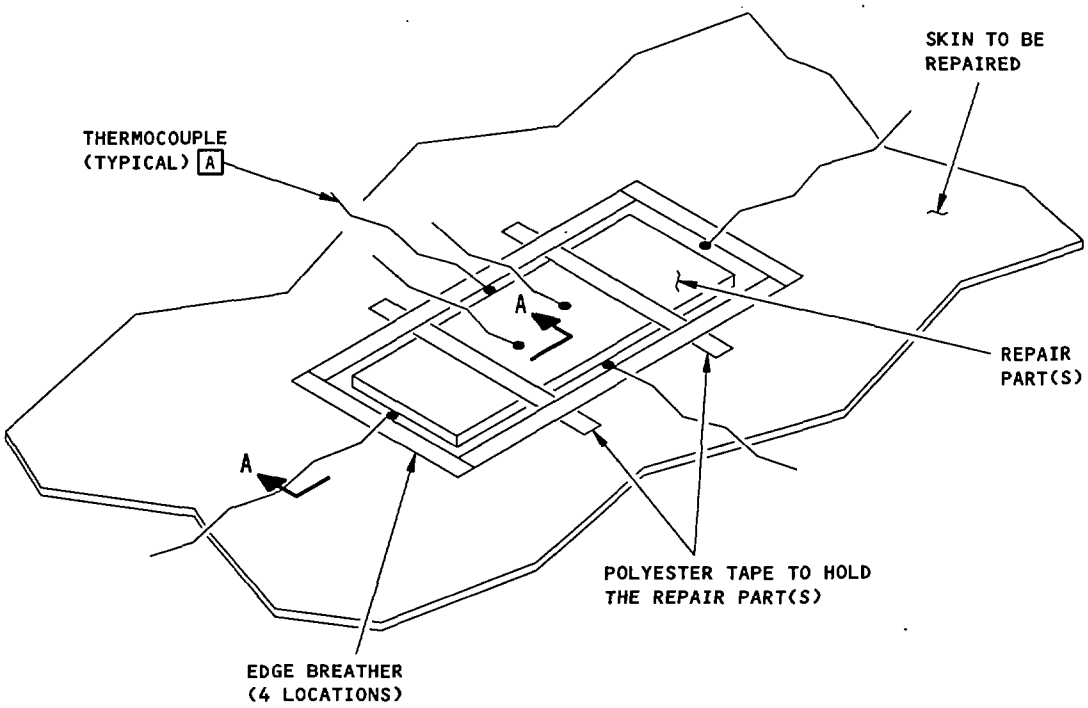

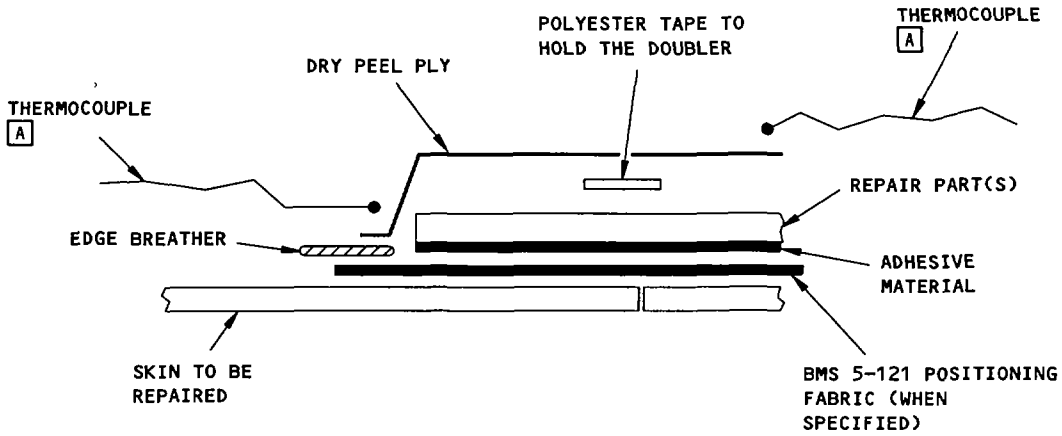

SECTION A-A

A REPAIRS MUST HAVE A MINIMUM OF ONE THERMOCOUPLE ABOVE THE REPAIR PART(S) AND TWO THERMOCOUPLES AT THE EDGES OF THE LARGEST REPAIR PART. ONE THERMOCOUPLE ABOVE THE REPAIR PART(S) FOR EVERY 36 SQUARE INCHES (0.025 SQUARE METERS) IS RECOMMENDED. SPACE THE THERMOCOUPLES EQUAL DISTANCES ABOVE AND AROUND THE REPAIR PART(S).

Thermocouple Locations
Figure 13

BOEING PROPRIETARY - Copyright © - Unpublished Work - See title page for details.

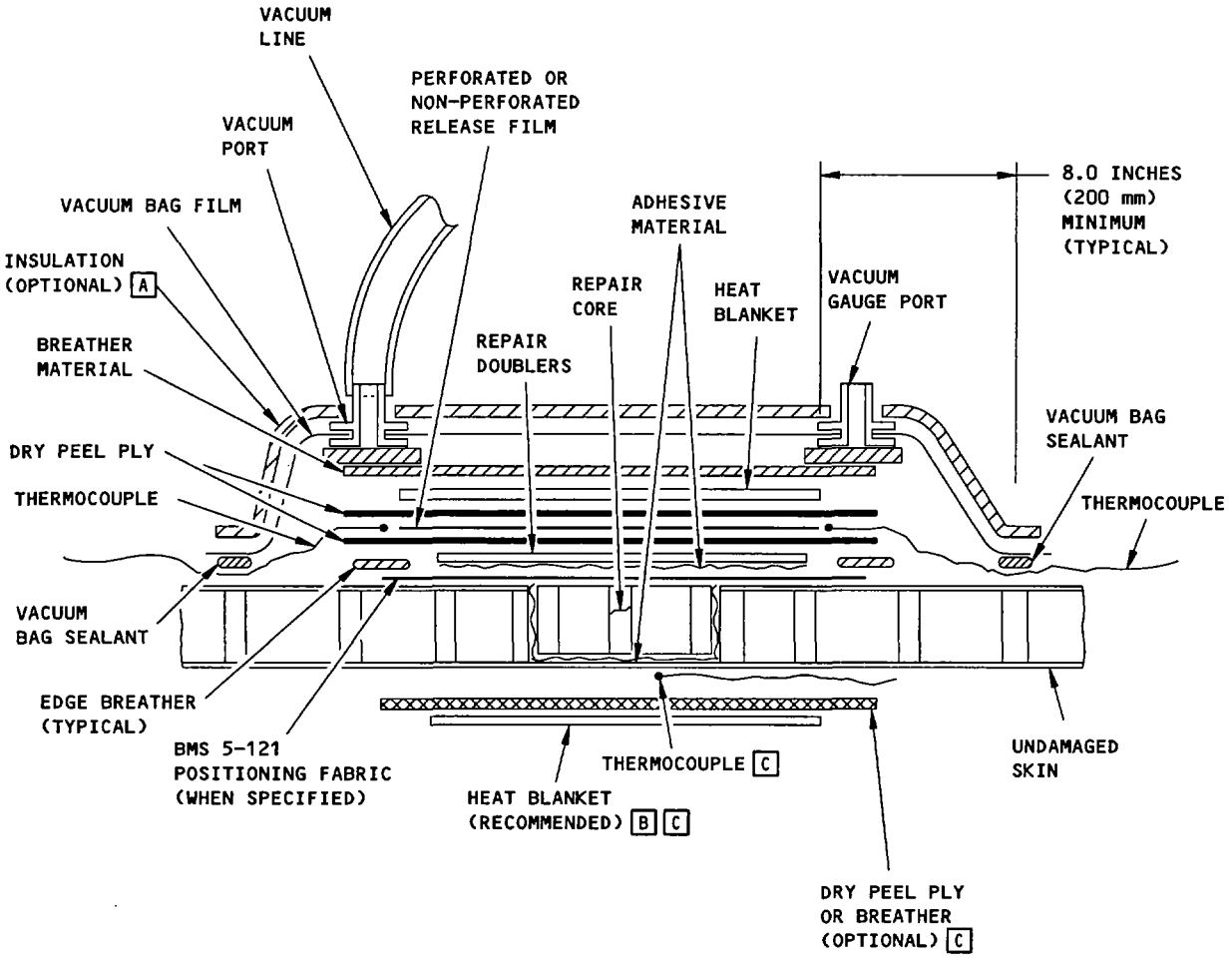

REPAIR OF DAMAGE TO ONE SIDE
DETAIL I

Layup of Vacuum Bagging Materials
Figure 14 (Sheet 1)

BOEING PROPRIETARY - Copyright © - Unpublished Work - See title page for details.

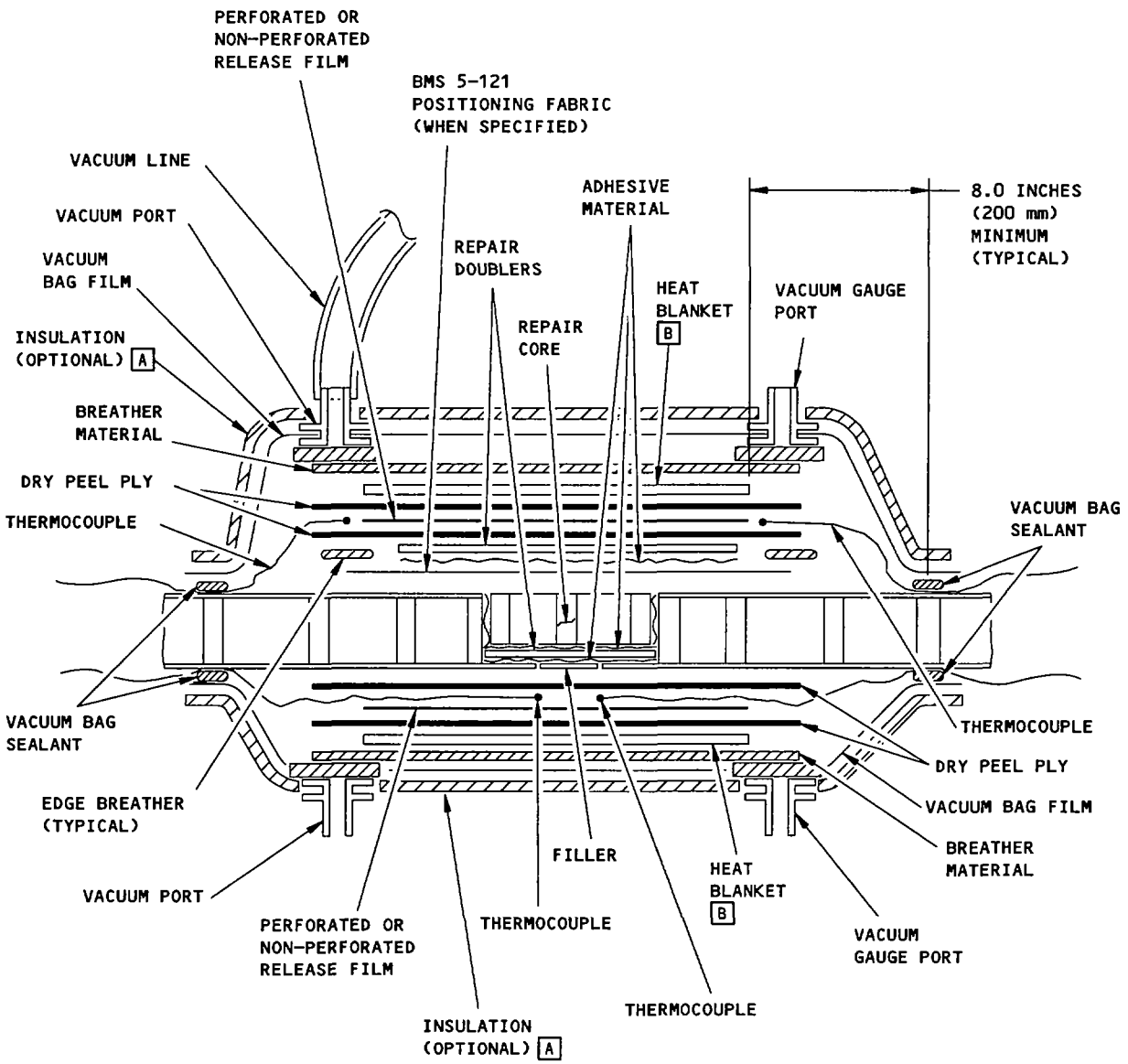

REPAIR OF DAMAGE TO BOTH SIDES
(SEPARATE VACUUM BAGS)
DETAIL II

Layup of Vacuum Bagging Materials
Figure 14 (Sheet 2)

BOEING PROPRIETARY - Copyright © - Unpublished Work - See title page for details.

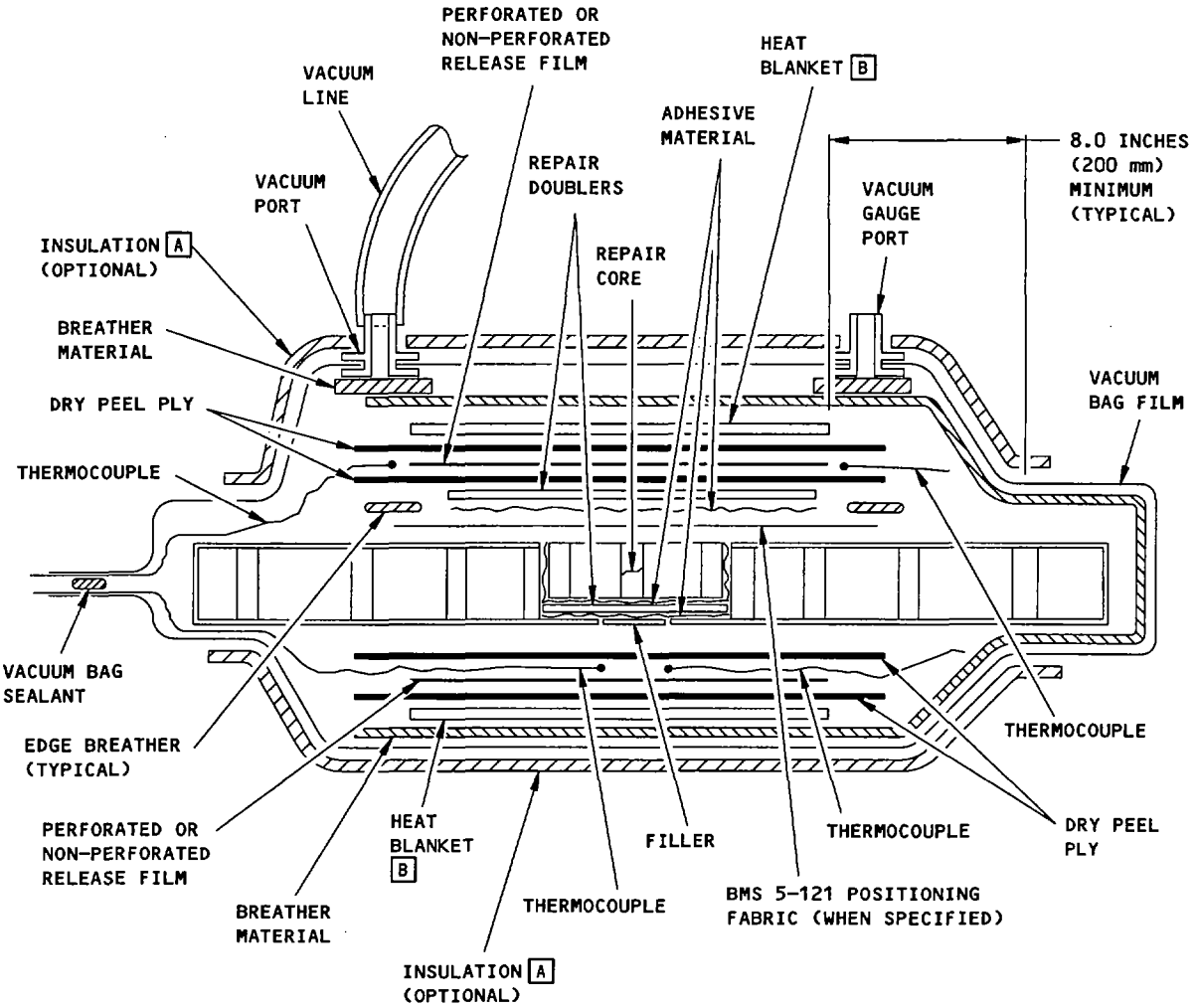

REPAIR OF DAMAGE TO BOTH SIDES
(ENVELOPE BAG)
DETAIL III

Layup of Vacuum Bagging Materials
Figure 14 (Sheet 3)

BOEING PROPRIETARY - Copyright © - Unpublished Work - See title page for details.

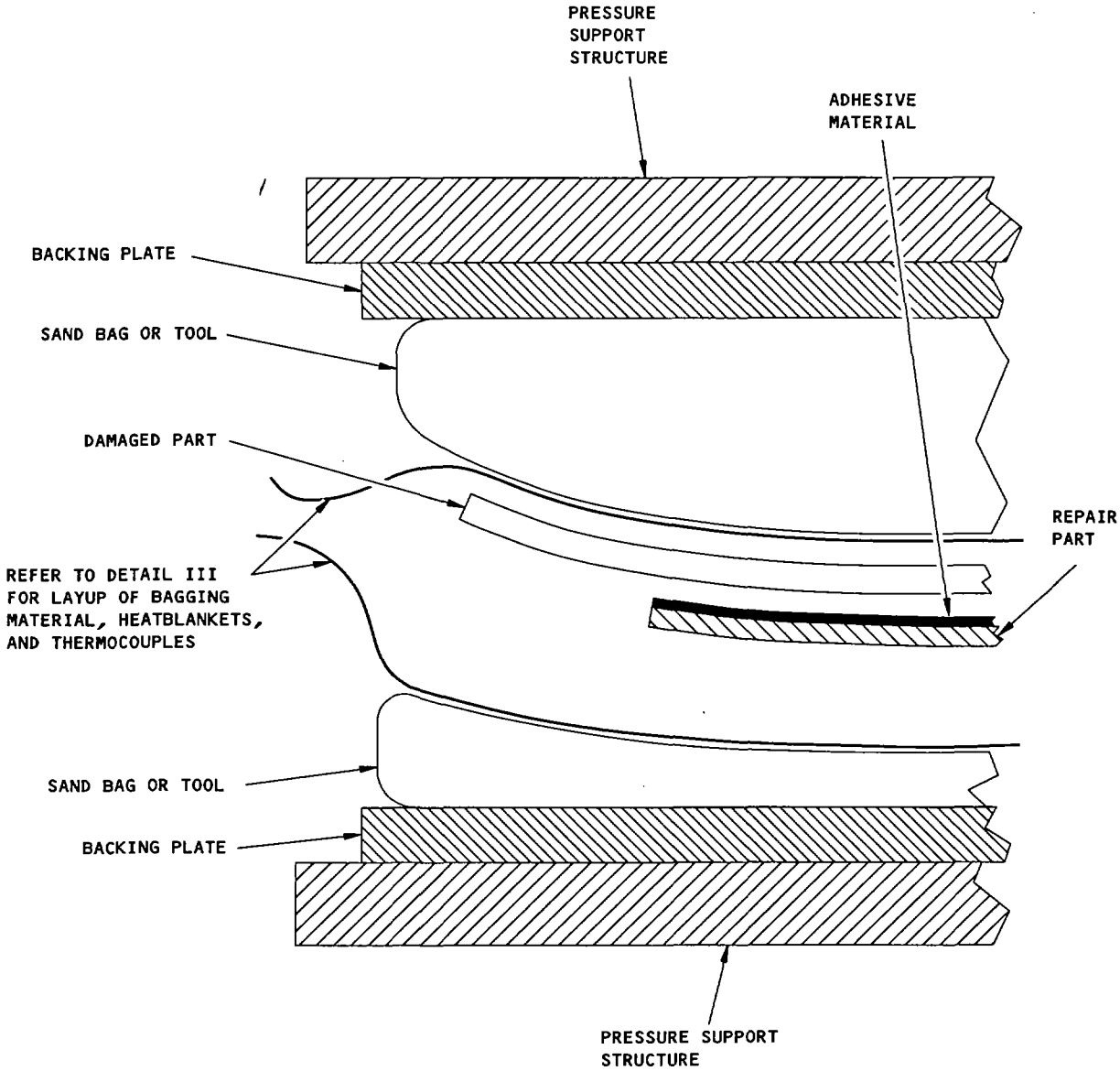

APPLICATION OF PRESSURE FOR ROUNDED OR CONTOURED PANELS

DETAIL IV

Layup of Vacuum Bagging Materials
Figure 14 (Sheet 4)

BOEING PROPRIETARY - Copyright © - Unpublished Work - See title page for details.

NOTES

- THIS FIGURE SHOWS THE LAYUP FOR A ONE STAGE CURE PROCEDURE. THE LAYUP FOR THE SECOND STAGE OF A TWO STAGE CURE PROCEDURE IS ALMOST THE SAME. REFER TO FIGURE 9 FOR THE INSTRUCTIONS TO DO THE FIRST STAGE OF A TWO STAGE CURE PROCEDURE.

[A] 4-8 PLIES OF BREATHER MATERIAL IS AN EXAMPLE. YOU CAN USE OTHER INSULATING MATERIALS ALSO. THIS WILL KEEP THE HEAT IN THE REPAIR AREA.

[B] YOU CAN USE THESE THERMOCOUPLES TO MAKE SURE THAT IF THE HEAT BLANKET GETS TOO HOT, YOU CAN TURN OFF THE POWER SUPPLY BEFORE YOU DAMAGE THE SKIN PANEL.

[C] IF YOU DO A TWO STAGE CURE PROCEDURE TO REPAIR THE CORE, REFER TO FIGURE 8 FOR THE FIRST STAGE OF THE PROCEDURE. IF YOU DO THE ONE STAGE CURE PROCEDURE, THEN YOU MUST HAVE ACCESS TO EACH SIDE OF THE HONEYCOMB PANEL.

- PUT A THERMOCOUPLE ON THE UNDAMAGED FACESHEET AT THE LOCATION OF THE REPAIR CORE. IT IS RECOMMENDED THAT YOU PUT A DRY PEEL PLY OR BREATHER AND HEAT BLANKET ABOVE THE THERMOCOUPLE ON THE UNDAMAGED SKIN.

TWO STAGE CURE PROCEDURE IS NECESSARY TO REPAIR THE CORE IF:

- THE DAMAGE IS LARGER THAN 64 SQUARE INCHES (0.041 SQUARE METERS) OR,
- IF YOU CAN NOT PUT A THERMOCOUPLE AT THE REPAIR CORE LOCATION ON EACH SIDE OF THE HONEYCOMB PANEL.

Layup of Vacuum Bagging Materials
Figure 14 (Sheet 5)

BOEING PROPRIETARY - Copyright © - Unpublished Work - See title page for details.

REPAIR OF A DISBOND AT AN EDGE OF ALUMINUM HONEYCOMB STRUCTURE

1. Applicability

   A. This procedure is a typical repair that is applicable to damage on the edge of an aluminum honeycomb panel.

2. General

   A. The illustrations and instructions in this repair show different examples of repairs and types of damage. You can do repairs that put together one or more of these examples. Use the correct repair procedure for each type of example.

   B. Refer to Fig. 1 for this procedure.

      (1) A disbond of a facesheet cannot be deeper than 0.50 inch (12.5mm) into the panel edgeband.

      (2) The cumulative (total) length of multiple disbonds cannot be longer than 30 percent of the length of the edge.

      (3) The initial adhesive primer (between the separated skins) must be satisfactory.

3. References

SRM 51-40-20	Repair General – Aluminum Honeycomb Repairs – 250°F (121°C) Cure
SRM 51-40-24	Repairs to Large Damage

4. Repair Procedures

   A. Find the limits of the damage. If you have cracks or corrosion to the edge, then refer to 51-40-24, for the repair instructions.

   B. Remove all of the water and other contamination, in and around the damaged area.

      NOTE: The area must be fully dry before you continue on with this repair procedure. If necessary, you can dry the area at a faster rate with an external heat source. Limit the temperature to a maximum of 150°F (66°C).

   C. Inspect the primer to make sure that it has not been damaged as given in 51-40-20, Par. 6.

   D. Prepare and apply a two part paste adhesive in the disbonded area as given in 51-40-20, Par. 19.

BOEING PROPRIETARY - Copyright © - Unpublished Work - See title page for details.

E. Use a clamp to hold the skins together. Use a light clamping pressure to hold the skins together.

NOTE: To apply the clamping pressure equally, use wood, metal, or phenolic wedges (or blocks, if more applicable) between the skin and clamps.

(1) Make sure that there is no air caught in-between the adhesive material and the skins.

(2) Remove unwanted adhesive material that can appear from the edge of the disbonded area.

F. Cure the repair as given in 51-40-20, Par. 20.

G. Examine the repair as given in 51-40-20, Par. 21.

H. Clean, seal and finish as given in 51-40-20, Par. 22.

BOEING PROPRIETARY - Copyright © - Unpublished Work - See title page for details.

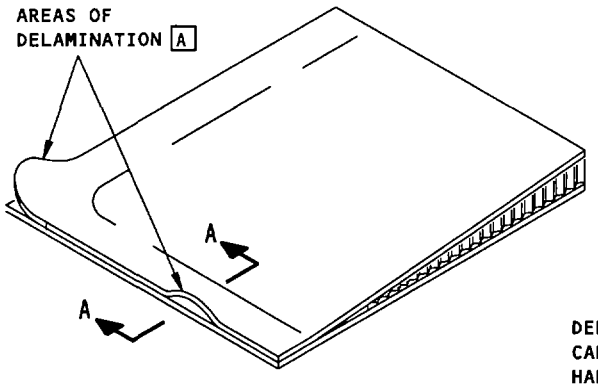

EXAMPLES OF
DELAMINATION

DETAIL I

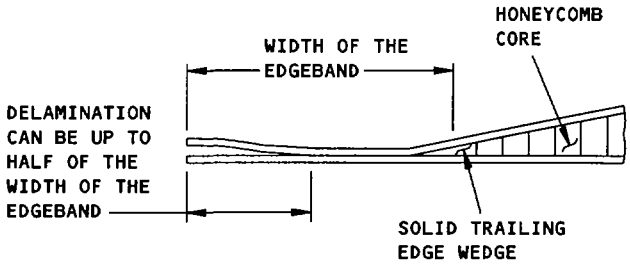

SECTION A-A

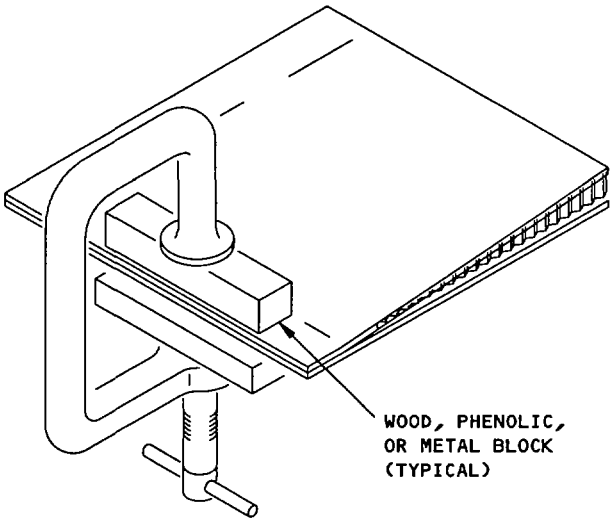

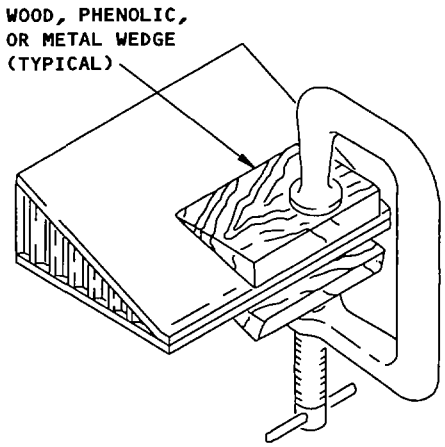

EXAMPLES OF ALUMINUM SKINS THAT
ARE HELD TOGETHER WITH CLAMPS

DETAIL II

NOTES

A THE DISBOND MUST NOT GO INTO THE HONEYCOMB CORE. DISBONDS AT FASTENER HOLES ARE NOT PERMITTED. THE CUMULATIVE (TOTAL) LENGTH OF MULTIPLE DISBONDS MUST BE LESS THAN 30% OF THE LENGTH OF THE EDGEBAND.

Repair of Disbonds at an Edge
Figure 1

BOEING PROPRIETARY - Copyright © - Unpublished Work - See title page for details.

REPAIRS TO SMALL DAMAGE

1. Applicability

A. This procedure has typical repairs that are applicable to dents, nicks, creases, gouges, cracks and small holes on one side of an aluminum honeycomb sandwich structure. Refer to 51-10-1 for the damage definitions.

NOTE: These repairs are limited to damage that is 2.0 inches (50 mm) or less in length and diameter. These repairs are interim when paste adhesive is used. Inspect past adhesive repairs each 24 months or less, or each 3500 flight cycles or less (no later than the interval that occurs first). Refer to Fig. 1 for other repair options.

B. Refer to 51-40-24 for all damage that is larger than 2.0 inches (50 mm) in length and diameter.

2. General

A. The illustrations and instructions in this repair show different examples of repairs and types of damage. You can do repairs that put together one or more of these examples. Use the correct repair procedure for each type of example.

B. Proximity of repairs.

(1) Repair doublers must be a minimum of 2.0 inches (50 mm) apart, edge to edge.

(2) If a repair doubler will be closer than 2.0 inches (50 mm) to an adjacent repair doubler, then use one doubler for the multiple damage areas.

NOTE: If the repair doubler will be too close to a doubler from an old repair, then you can remove the old doubler. Then use one large doubler for the old damage and the new damage.

C. Refer to 51-40-20, Fig. 1 for repair sizes and options.

(1) Refer to Fig. 1 for the layout of a dent repair.

(2) Refer to Fig. 2 for the layout of a repair to a nick, gouge or crack in the skin.

(3) Refer to Fig. 3 for the layout of a small hole repair.

D. Refer to 51-40-20, Table 3 for the cure information for the adhesive.

3. References

SRM 51-10-1	Inspection and Removal of Damage
SRM 51-40-20	Repair General - Aluminum Honeycomb Repairs - 250°F (121°C) Cure
SRM 51-40-24	Repairs to Large Damage
NDT Part 1, 51-04-00	Ultrasonic Bond Inspection of Metal-to-Metal Bonding and Honeycomb Structures
NDT Part 1, 51-05-01	Tap Test Inspection of Honeycomb Sandwich Structure

BOEING PROPRIETARY - Copyright © - Unpublished Work - See title page for details.

4. Repair Instructions

A. Do a non-destructive inspection (NDI) to find the limits of the visible damage. If there is delaminated skin then cut out the damaged area and do a hole repair. Refer to NDT Part 1, 51-05-01 or NDT Part 1, 51-04-00.

B. Remove the surface finish and all contamination as specified in 51-40-20.

C. Repair to a surface that has a crack.

(1) Stop drill the ends of cracks as specified in 51-10-1.

(2) If there is an adhesive primer on the surface then do an inspection as specified in 51-40-20, par. 6.B. If the primer is in a satisfactory condition, then permit the primer to remain. Clean the primer as specified in 51-40-20, par. 6.B.

(3) If there is no adhesive primer, or if the primer is not in a satisfactory condition, then do a surface preparation procedure as specified in 51-40-20, par. 11.

D. Repair to a surface that has a small hole.

(1) Remove the damaged skin and core.

(2) The maximum size of a hole that can be filled with potting compound is 1.0 inch (25 mm) in diameter. If the hole is larger than 1.0 inch (25 mm), then make and install a repair core as specified in 51-40-20, par. 8, and 51-40-20, par. 9.

(3) If there is an adhesive primer on the surface then do an inspection as specified in 51-40-20, par. 6.B. If the primer is in a satisfactory condition, then permit the primer to remain. Clean the primer as specified in 51-40-20, par. 6.B.

(4) If there is no adhesive primer, or if the primer is not in a satisfactory condition, then do a surface preparation procedure as specified in 51-40-20, par. 11.

E. Repair of dents.

(1) If the depth of a dent is equal or deeper than two times the skin thickness, then the dent repair is time-limited. Remove the doubler at 24 months (or less) or each 3500 flight cycles or less (no later than the interval that occurs first) and do a hole repair.

(2) Apply strong finger pressure to the damaged area to see if the core compresses. If the core compresses, then the dent repair is time-limited. Remove the doubler at 24 months (or less) or each 3500 flight cycles or less (no later than the interval that occurs first) and do a hole repair.

(3) If there is an adhesive primer on the surface then do an inspection as specified in 51-40-20, par. 6.B. If the primer is in a satisfactory condition, then permit the primer to remain. Clean the primer as specified in 51-40-20, par. 6.B.

BOEING PROPRIETARY - Copyright © - Unpublished Work - See title page for details.

(4) Fill the dent. Do one of the procedures that follow:

(a) Potting compound procedure.

1) Abrade the area of the dent with 180 grit sandpaper. Fill with BMS 5-28, Type 6 or 7 potting compound.

2) Cure as specified in 51-40-20, Table 3.

3) Abrade the potting compound until it is flush with the undamaged skin. If there is adhesive primer on the surface to be bonded, do not damage the primer during the sanding procedure.

4) If there is no adhesive primer on the surface to be bonded, or if the primer is not in a satisfactory condition, then do a surface preparation procedure as specified in 51-40-20, par. 11.

(b) Paste adhesive procedure.

1) If there is no adhesive primer on the surface to be bonded, or if the primer is not in a satisfactory condition, then do a surface preparation procedure as specified in 51-40-20, par. 11.

2) Fill the dent with the same paste adhesive that will be used to bond the doubler.

(c) Film adhesive procedure.

1) If there is no adhesive primer on the surface to be bonded, or if the primer is not in a satisfactory condition, then do a surface preparation procedure as specified in 51-40-20, par. 11.

2) Fill the dent with the same film adhesive that will be used to bond the doubler. You can add BMS 5-121 positioning fabric to the adhesive inside the dent, (if necessary).

F. Refer to 51-40-20 for the bonding procedure and other repair steps.

BOEING PROPRIETARY - Copyright © - Unpublished Work - See title page for details.

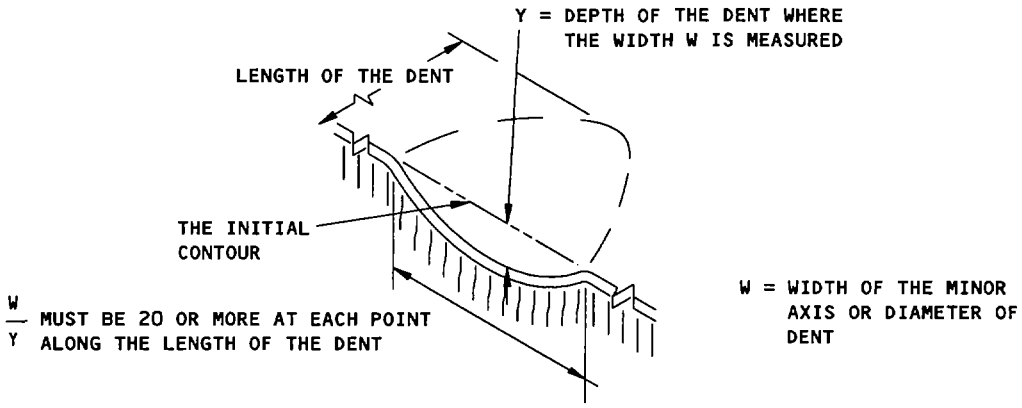

DENT THAT IS PERMITTED IN METAL HONEYCOMB STRUCTURE

DETAIL I

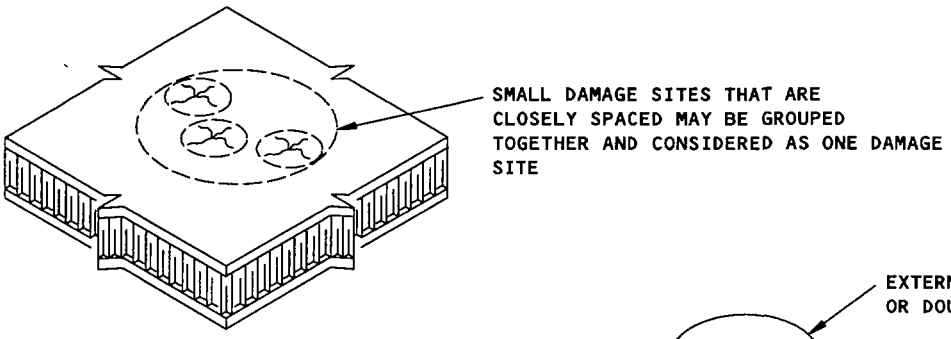

DETAIL II

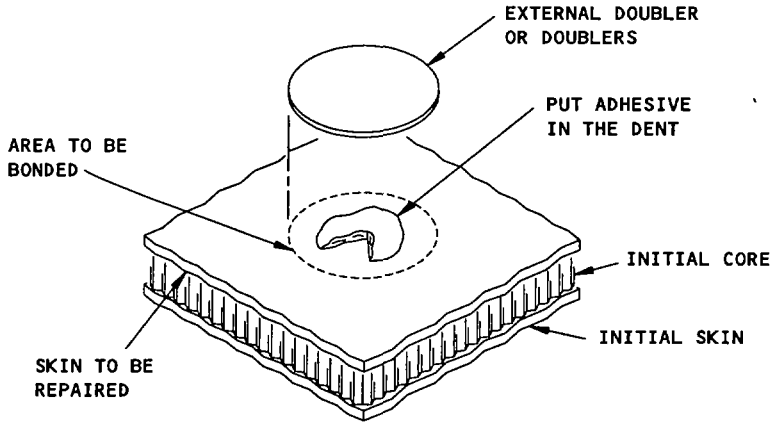

LAYOUT OF THE REPAIR PARTS

DETAIL III

External Doubler Repair of a Dent
Figure 1

BOEING PROPRIETARY - Copyright © - Unpublished Work - See title page for details.

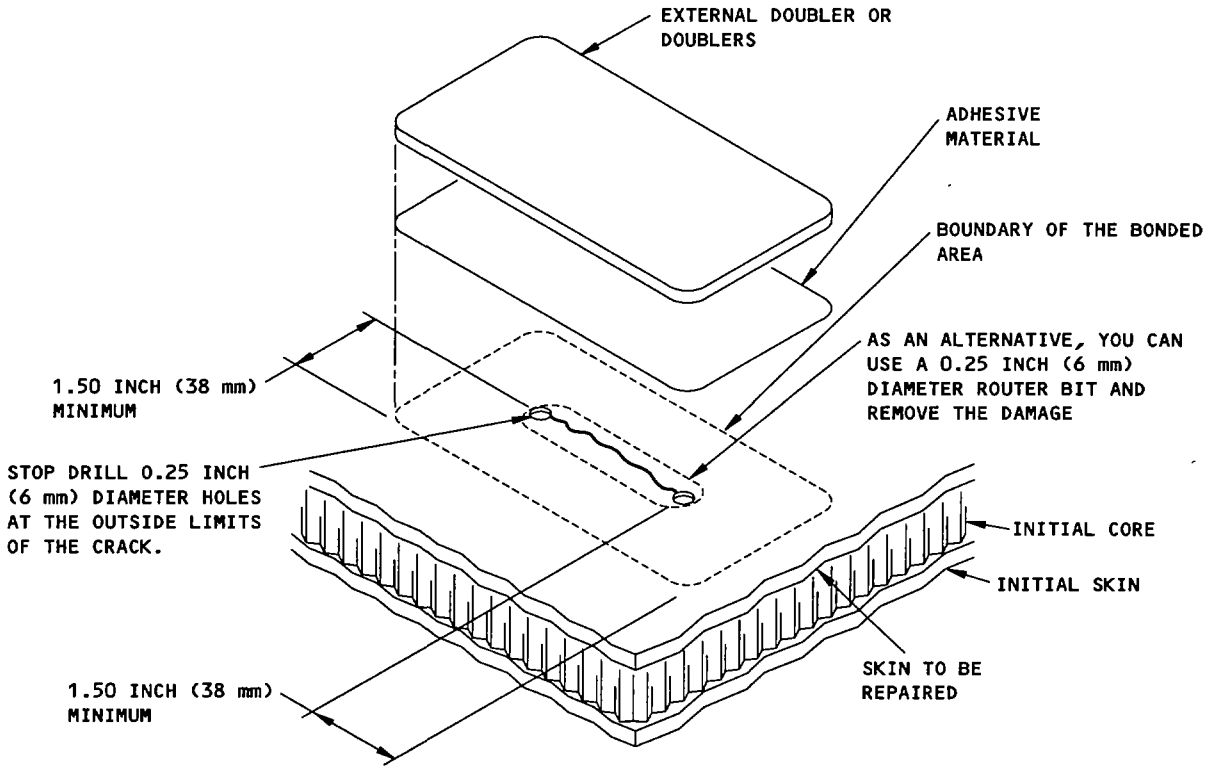

LAYOUT OF THE REPAIR PARTS

DETAIL I

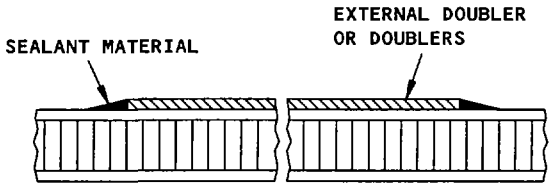

SECTION THROUGH THE REPAIR
(TYPICAL)

External Doubler Repair of a Nick, Gouge, or Crack in the Skin
Figure 2

BOEING PROPRIETARY - Copyright © - Unpublished Work - See title page for details.

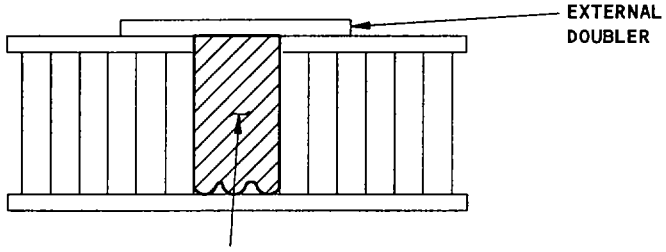

FILL THE CORE CELLS WITH BMS 5-28 TYPE 6 OR 7 POTTING COMPOUND

MAKE THE CELL WALLS STRAIGHT, OR CUT OUT THE CORE IF NECESSARY, TO MAKE IT EASY TO APPLY THE POTTING COMPOUND

PERMITTED DEPTH OF POTTING COMPOUND

DETAIL I

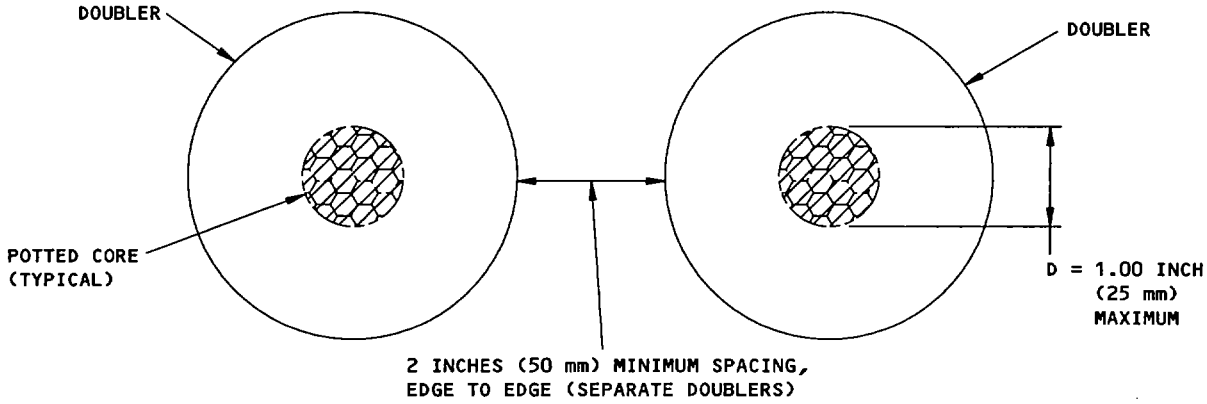

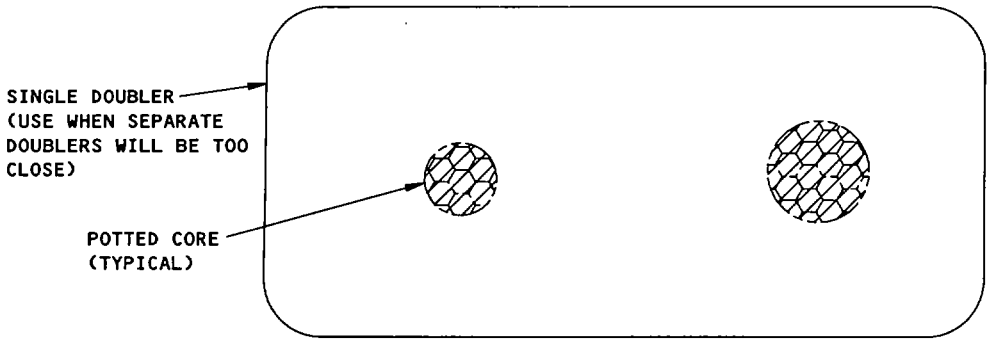

PERMITTED SPACING OF POTTED AREAS

DETAIL II

Potted Core Repair for Small Damage
Figure 3

BOEING PROPRIETARY - Copyright © - Unpublished Work - See title page for details.

SEPTUMIZED CORE REPAIRS

1. Applicability

   A. This procedure is an alternative to the full depth honeycomb core repair.

   B. This repair uses a septum:

      (1) To bond a partial depth core to an initial core, or

      (2) To bond two separate cores together to make a full depth core.

2. General

   A. The illustrations and instructions in this repair show different examples of repairs and types of damage. You can do repairs that put together one or more of these examples. Use the correct repair procedures for each type of example.

   B. Refer to 51-40-20 and 51-40-24, to repair the removed skin.

   C. Refer to Fig.1 for the configuration of the repair parts in a partial depth core replacement.

   D. Refer to Fig. 3 for the configuration of the repair parts in a full depth core replacement.

3. References

51-40-9	Glass Fabric Reinforced Epoxy and Phenolic Laminates Repair
51-40-19	Glass Fabric Strengthened Epoxy Laminates and Nonmetallic Honeycomb Sandwich Repairs – 250°F (121°C) Cure
51-40-20	Repair General – Aluminum Honeycomb Repairs – 250°F (121°C) Cure
51-40-24	Repairs to Large Damage

4. Remove the Damage

   A. Find the size limits for the damage as given in 51-40-20, par. 6.

   B. Remove the damage as given in 51-40-20, par. 7.

      (1) If the core material removed is less than 1/3 the full depth of the core, then remove a sufficient quantity of the core so that the repair septum will be located at a depth of 1/3 to 2/3 the full depth of the core. Then do the steps in par. 5.

      (2) If the core material removed is more than 2/3 the full depth of the core, then do one of the steps that follow:

         (a) Do the full depth septumized core steps in par. 6. or,

         (b) Do a full depth core repair steps as specified in 51-40-20, par. 9.

BOEING PROPRIETARY - Copyright © - Unpublished Work - See title page for details.

5. Partial Depth Septumized Core Repair

NOTE: This repair is cured in two stages.

A. Make the repair septum from pre-cured BMS 9-3 glass fabric impregnated with BMS 8-301 Class I epoxy resin, or pre-cured BMS 8-79 glass fabric reinforced plastic (GFRP) laminate or an aluminum alloy sheet. Make the septum the same size as the hole in the component to be repaired.

(1) Refer to 51-40-9 or 51-40-19 to make pre-cured GFRP.

(a) Lightly abrade the surface resin with 180-grit or finer abrasive paper to remove the glossy surface from the pre-cured GFRP.

(b) Do not sand into the glass fibers.

(2) If you use an aluminum sheet septum, then refer to 51-40-20 and do the steps that follow:

NOTE: Do not use clad 7000 series alloy aluminum as a septum.

(a) Do a surface preparation on each side of the septum, then

(b) Put an adhesive primer on each side of the septum.

B. Make the honeycomb repair core. Refer to 51-40-20, par. 8.

C. Apply the adhesive materials. Refer to Fig. 1 for the applicable adhesive and the steps that follow:

(1) Put film adhesive into the hole. Refer to 51-40-20, par. 9.

(2) Put the septum in the hole.

(3) Put a layer of film adhesive on the septum as specified in Fig. 1.

(4) Install the honeycomb repair core. Refer to 51-40-20, par. 9.

D. Do the first stage of the two stage cure. Refer to 51-40-20, par. 9.

E. Do a visual inspection of the repair area after the cure is completed and the thermocouples have been removed.

(1) Look for areas of disbond in the adhesive bond between the repair core and the initial core. There must be no gaps or disbonds in these areas.

NOTE: If you find disbonds in the adhesive surface, then fill them with BMS 5-28, Type 6 or Type 7 potting compound. Cure the BMS 5-28 potting compound during the final stage of the cure.

BOEING PROPRIETARY - Copyright © - Unpublished Work - See title page for details.

(2) Look for disbonds in the adhesive materials between the septum and the repair core.

(a) If the diameter of the repair septum is larger than 2.0 inches, (50 mm) and you find disbands that are larger than 3/8 inch (10 mm) in diameter, then the repair is not satisfactory.

(b) If the diameter of the repair septum is less than 2.0 inches (50 mm), then no visible disbonds are permitted.

6. Full Depth Septumized Core Repair

NOTE: This repair is cured in three stages.

A. Cut two pieces of honeycomb core that are a minimum of 1.0 inch (25 mm) diameter larger than the hole in the component to be repaired.

B. Each piece of honeycomb core must be a minimum of 1/3 the depth of the hole and a maximum of 2/3 the depth of the hole.

C. The core/septum assembly must be higher than the depth of the hole.

NOTE: This will permit you to abrade the top of the core to make it flush with the skin surface.

D. Make the repair septum from pre-cured BMS 9-3 glass fabric impregnated with BMS 8-301 Class I epoxy resin, or pre-cured BMS 8-79 glass fabric reinforced plastic (GFRP), or an aluminum alloy sheet.

NOTE: Make the septum approximately the same size as the repair core blankets.

(1) Refer to 51-40-9 or 51-40-19 to make pre-cured GFRP laminate.

(a) Lightly abrade the surface resin of the cured GFRP laminate with180-grit or finer abrasive paper to remove the glossy surface.

(b) Do not sand into the glass fibers.

(2) If you use an aluminum sheet septum, then refer to 51-40-20 and do the steps that follow:

NOTE: Do not use clad 7000 series alloy aluminum as a septum.

(a) Do a surface preparation on each side of the septum, then

(b) Put an adhesive primer on each side of the septum.

BOEING PROPRIETARY - Copyright © - Unpublished Work - See title page for details.

E. Apply the adhesive materials. Refer to Fig. 2 for the applicable adhesive and the steps that follow:

(1) Put film adhesive on the mating surface of the first honeycomb core blanket that you will bond the septum to.

(2) Put the septum on the first honeycomb core blanket.

(3) Put film adhesive on the septum.

(4) Put the second honeycomb core blanket on to the septum. Make sure that the ribbon direction is the same as the bottom core.

F. Cure the honeycomb core/septum assembly. Refer to Fig. 2.

(1) Put the assembly on a clean, hard, and flat surface.

(2) Put edge support blocks against the edges of the assembly.

(3) Do the vacuum bag layup.

(4) Cure the assembly as specified in 51-40-19, if the GFRP septum is used or 51-40-20, par. 20. if the aluminum septum is used.

G. Cut the core/septum assembly to the necessary shape. (A core cylinder, for example).

H. Look for disbonds in the adhesive materials between the septum and the two honeycomb repair cores.

(1) If the diameter of the repair septum is larger than 2.0 inches, (50 mm) and you find disbonds that are larger than 3/8 inch (10 mm) in diameter, then the repair is not satisfactory.

(2) If the diameter of the repair septum is less than 2.0 inches (50 mm), then no visible disbonds are permitted.

I. Install the honeycomb repair core/septum assembly and do the second stage of the three stage cure. Refer to 51-40-20, par. 9.

7. Complete the Repair

A. Complete the repair as specified in 51-40-20 and 51-40-24.

BOEING PROPRIETARY - Copyright © - Unpublished Work - See title page for details.

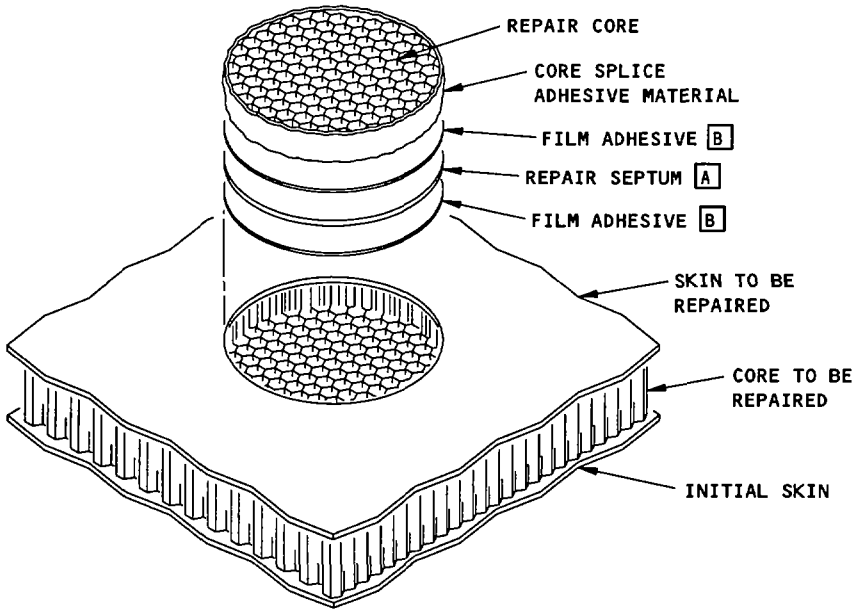

LAYOUT OF THE REPAIR PARTS

DETAIL I

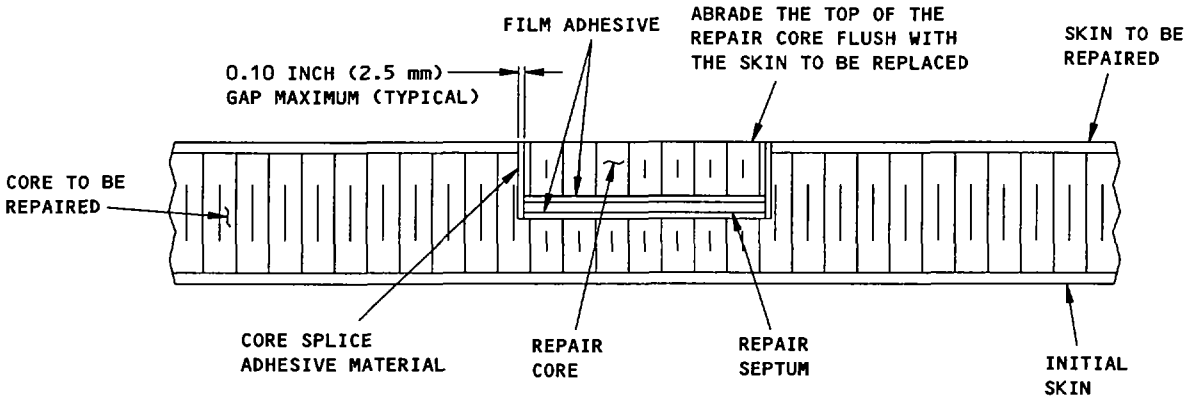

SECTION THROUGH THE CENTER OF THE REPAIR AREA

Bonded Doubler Repair That Uses an Internal Septum For a Less Than Full Depth Core Replacement
Figure 1 (Sheet 1)

BOEING PROPRIETARY - Copyright © - Unpublished Work - See title page for details.

NOTES

- REFER TO 51-40-20 FOR REPAIR CORE INSTALLATION PROCEDURES.

A MAKE THE SEPTUM OUT OF PRE-CURED GLASS FABRIC REINFORCED PLASTIC (GFRP) LAMINATE OR AN ALUMINUM ALLOY SHEET:

A. TO MAKE A RE-CURED GFRP LAMINATE FROM DRY FABRIC, REFER TO 51-40-9. MAKE ONE OF THE LAMINATES THAT FOLLOW:

- IMPREGNATE AND THEN CURE TWO PLIES OF BMS 9-3, TYPE H-2 GLASS FABRIC AND BMS 8-301, CLASS I EPOXY RESIN, OR
- IMPREGNATE AND THEN CURE THREE PLIES OF BMS 9-3, TYPE D GLASS FABRIC AND BMS 8-301. CLASS I EPOXY RESIN.

B. TO MAKE A PRE-CURED GFRP PREPREG LAMINATE, REFER TO 51-40-19. MAKE ONE OF THE LAMINATES THAT FOLLOW:

- TWO PLIES OF BMS 8-79, CLASS III, STYLE 1581 OR 7781, OR
- THREE PLIES OF BMS 8-79, CLASS III, STYLE 120 OR 220.

C. TO MAKE AN ALUMINUM ALLOY SHEET SEPTUM, USE 0.012 - 0.020 INCH THICK ALUMINUM.

- USE THE SAME BOEING MATERIAL SPECIFICATION (BMS) ALUMINUM MATERIAL, (OR AN EQUIVALENT ALUMINUM MATERIAL). USE THE SAME (OR SIMILAR) HEAT-TREAT AS THE INITIAL ALUMINUM SKIN THAT IS TO BE REPAIRED.
- DO NOT USE 7000 SERIES ALUMINUM THAT HAS A CLAD SURFACE. IF THE SKIN TO BE REPAIRED IS A CLAD 7000 SERIES ALUMINUM, THEN USE AN UNCLAD 7000 SERIES ALUMINUM.

B APPLY THE ADHESIVE MATERIALS TO THE TWO MATING SURFACES OF THE REPAIR SEPTUM AS FOLLOWS:

A. FOR THE PRE-CURED GFRP SEPTUM:

- APPLY TWO LAYERS OF BMS 5-129, TYPE IV, GRADE 10 ADHESIVE FILM.

B. FOR THE ALUMINUM SEPTUM:

- APPLY TWO LAYERS OF BMS 5-101, GRADE 10 OR ONE LAYER OF BMS 5-101, GRADE 15 ADHESIVE FILM.

Bonded Doubler Repair That Uses an Internal Septum For a Less Than Full Depth Core Replacement
Figure 1 (Sheet 2)

BOEING PROPRIETARY - Copyright © - Unpublished Work - See title page for details.

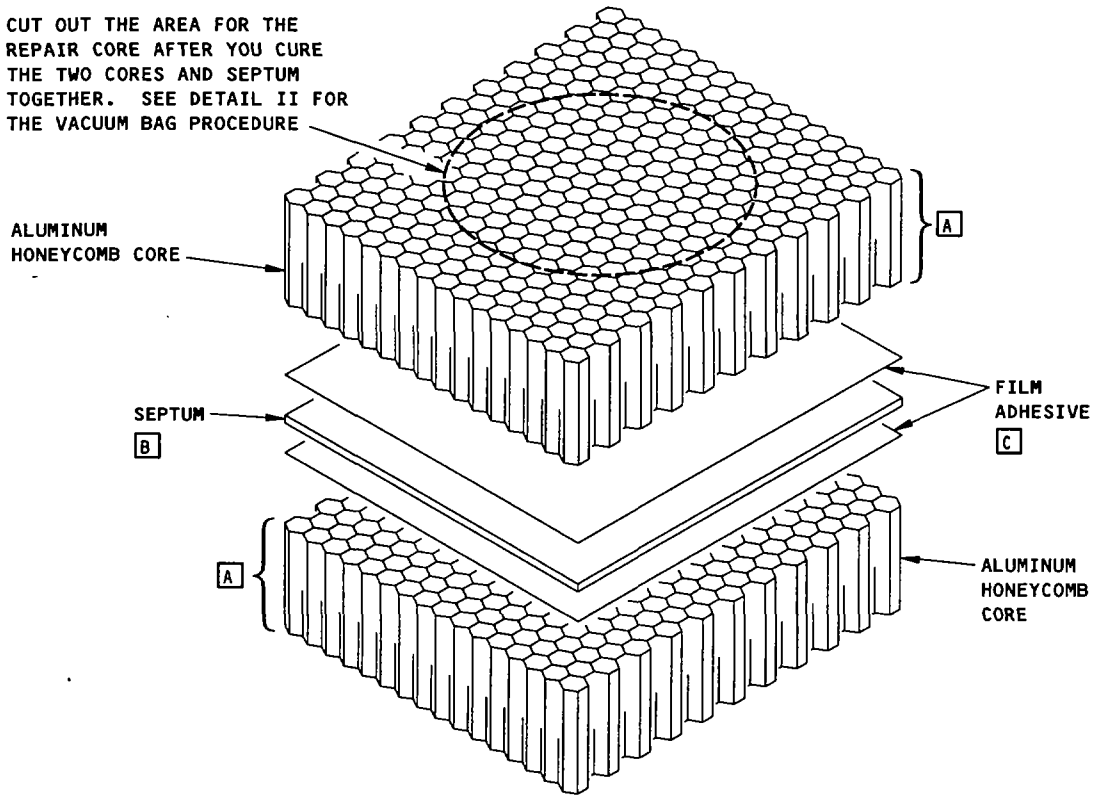

LAYOUT OF THE ALUMINUM CORE SEPTUM ASSEMBLY

DETAIL I

Bonded Doubler Repair That Uses Two Cores and an Internal Septum for Full Core Replacement
Figure 2 (Sheet 1)

BOEING PROPRIETARY - Copyright © - Unpublished Work - See title page for details.

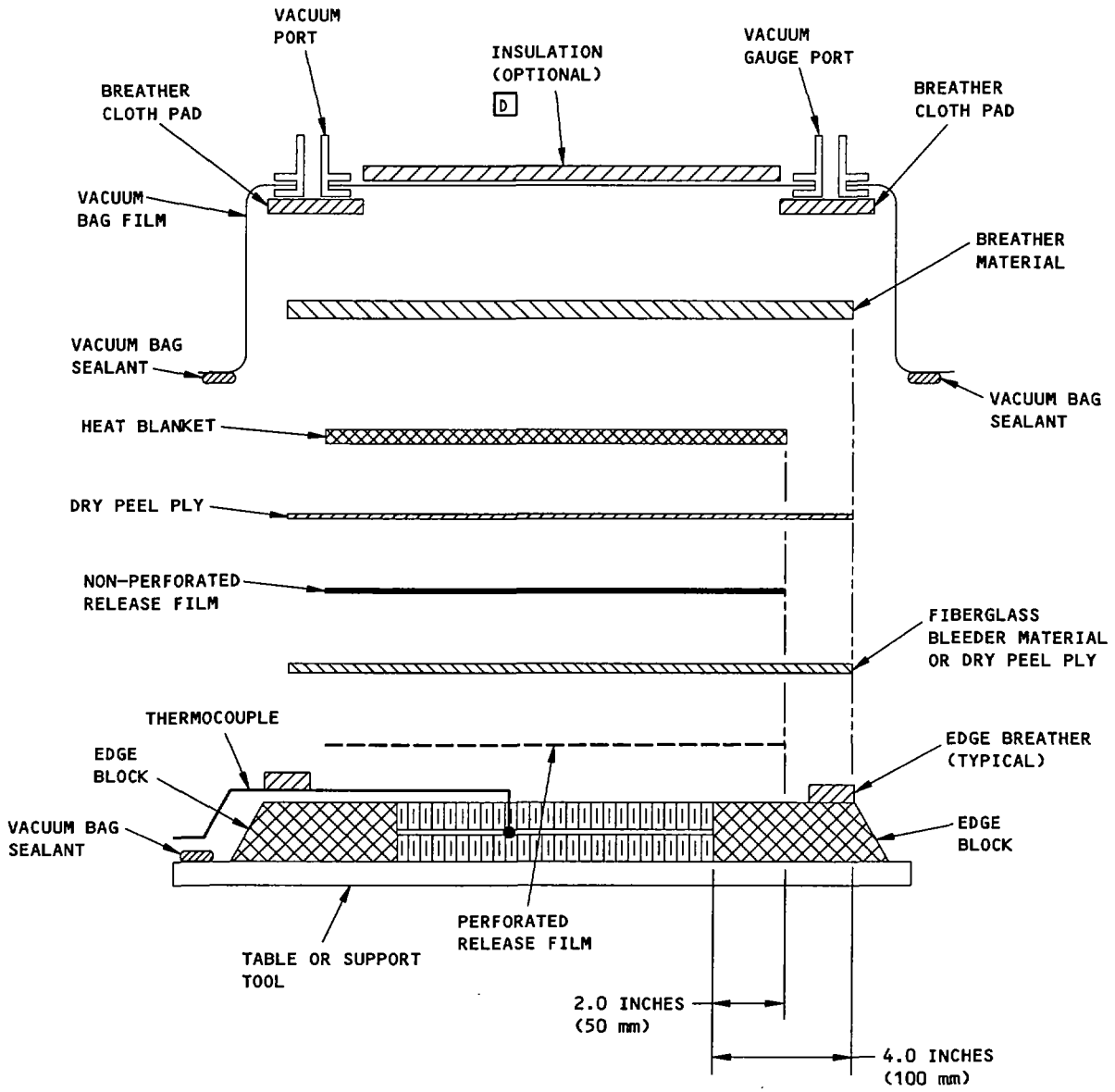

VACUUM BAG PROCEDURE

DETAIL II

Bonded Doubler Repair That Uses Two Cores and an Internal Septum for Full Core Replacement
Figure 2 (Sheet 2)

BOEING PROPRIETARY - Copyright © - Unpublished Work - See title page for details.

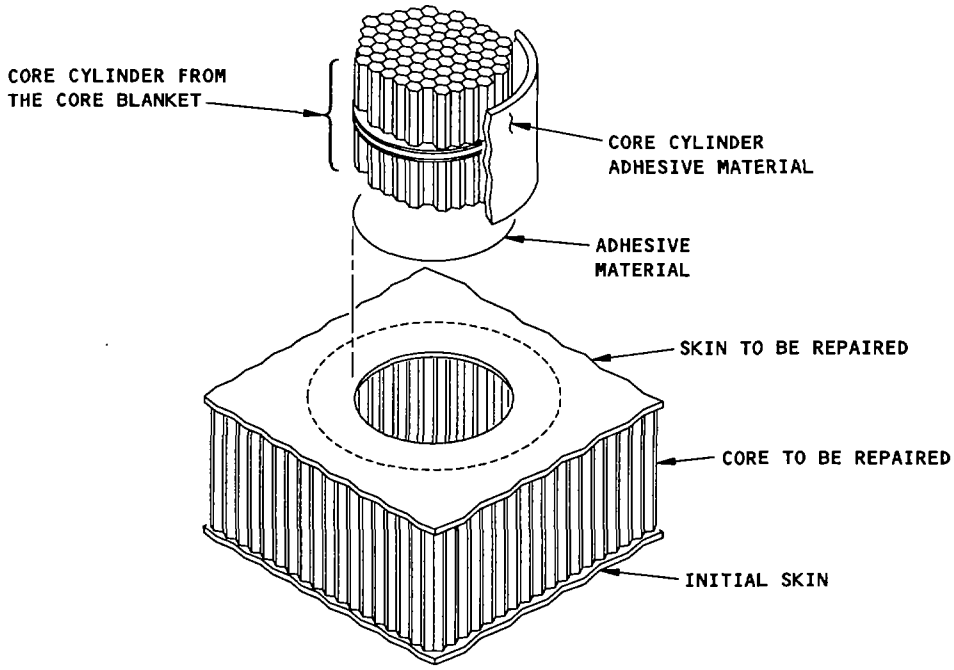

LAYOUT OF THE REPAIR PARTS FOR DAMAGE
TO FULL DEPTH CORE AND ONE SKIN

DETAIL III

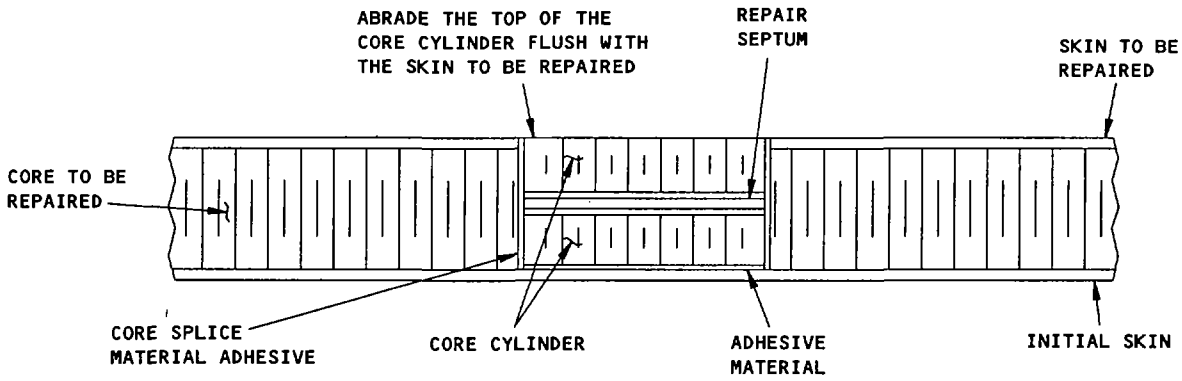

SECTION THROUGH THE CENTER OF THE REPAIR AREA

Bonded Doubler Repair That Uses Two Cores and an
Internal Septum for Full Core Replacement
Figure 2 (Sheet 3)

BOEING PROPRIETARY - Copyright © - Unpublished Work - See title page for details.

NOTES

- REFER TO 51-40-20 FOR REPAIR CORE INSTALLATION PROCEDURES.

[A] THE HEIGHT OF EACH CORE MUST BE A MINIMUM OF 1/3 THE DEPTH OF THE HOLE AND A MAXIMUM OF 2/3 THE DEPTH OF THE HOLE.

[B] MAKE THE SEPTUM OUT OF PRE-CURED GLASS FABRIC REINFORCED PLASTIC (GFRP) LAMINATE OR AN ALUMINUM ALLOY SHEET:

A. TO MAKE A PRE-CURED GFRP LAMINATE FROM DRY FABRIC, REFER TO SRM 51-40-9. MAKE ONE OF THE LAMINATES THAT FOLLOW:

- IMPREGNATE AND THEN CURE TWO PLIES OF BMS 9-3, TYPE H-2 GLASS FABRIC AND BMS 8-301, CLASS I EPOXY RESIN, OR
- IMPREGNATE AND THEN CURE THREE PLIES OF BMS 9-3, TYPE D GLASS FABRIC AND BMS 8-301, CLASS I EPOXY RESIN.

B. TO MAKE A PRE-CURED GFRP PREPREG LAMINATE, REFER TO SRM 51-40-19. MAKE ONE OF THE LAMINATES THAT FOLLOW:

- TWO PLIES OF BMS 8-79, CLASS III, STYLE 1581 OR 7781, OR
- THREE PLIES OF BMS 8-79, CLASS III, STYLE 120 OR 220.

C. TO MAKE AN ALUMINUM ALLOY SHEET SEPTUM, USE 0.012 - 0.020 INCH THICK ALUMINUM.

- USE THE SAME BOEING MATERIAL SPECIFICATION (BMS) ALUMINUM MATERIAL, (OR AN EQUIVALENT ALUMINUM MATERIAL). USE THE SAME (OR SIMILAR) HEAT-TREAT AS THE INITIAL ALUMINUM SKIN THAT IS TO BE REPAIRED.
- DO NOT USE 7000 SERIES ALUMINUM THAT HAS A CLAD SURFACE. IF THE SKIN TO BE REPAIRED IS A CLAD 7000 SERIES ALUMINUM, THEN USE AN UNCLAD 7000 SERIES ALUMINUM.

[C] APPLY THE ADHESIVE MATERIALS TO THE TWO MATING SURFACES OF THE REPAIR SEPTUM AS FOLLOWS:

A. FOR THE PRE-CURED GFRP SEPTUM:

- APPLY TWO LAYERS OF BMS 5-129, TYPE IV, GRADE 10 ADHESIVE FILM.

B. FOR THE ALUMINUM SEPTUM:

- APPLY TWO LAYERS OF BMS 5-101, GRADE 10 OR ONE LAYER OF BMS 5-101, GRADE 15 ADHESIVE FILM.

[D] 4-8 PLIES OF BREATHER MATERIAL FOR EXAMPLE. YOU CAN USE OTHER INSULATION MATERIALS ALSO. THIS WILL KEEP THE HEAT IN THE REPAIR AREA.

Bonded Doubler Repair That Uses Two Cores and an Internal Septum for Full Core Replacement
Figure 2 (Sheet 4)

BOEING PROPRIETARY - Copyright © - Unpublished Work - See title page for details.

REPAIRS TO LARGE DAMAGE

1. Applicability

   A. Repair 4 has typical repairs for aluminum honeycomb sandwich structure with large damage.

   B. In these repairs, it will be necessary to remove and replace the damaged area of the skin and/or core.

2. General

   A. The illustrations and instructions in this repair show different examples of repairs and types of damage. You can do repairs that put together one or more of these examples. Use the correct repair procedures for each type of example.

   B. If you have damage to the skin and core away from the edge, then refer to Fig. 1 for the layout of the repair parts.

   C. If you have damage at the edge, then refer to Fig. 2 for the layout of the repair parts.

   D. If you have damage from an edge to an edge, then refer to Fig. 3 for the layout of the repair parts.

3. References

   SRM 51-40-20 Repair General – Aluminum Honeycomb Repairs – 250°F (121°C) Cure

4. Repair Instructions

   A. Find and remove the damage as specified in 51-40-20, par. 6 and par. 7.

   B. Refer to the component engineering drawings or use NDI procedures to find the locations of internal doublers and other repairs. Refer to the repair figures for the doubler thicknesses and overlaps to use when cutouts are near a panel edgeband.

   C. Refer to 51-40-20 for the repair steps.

BOEING PROPRIETARY - Copyright © - Unpublished Work - See title page for details.

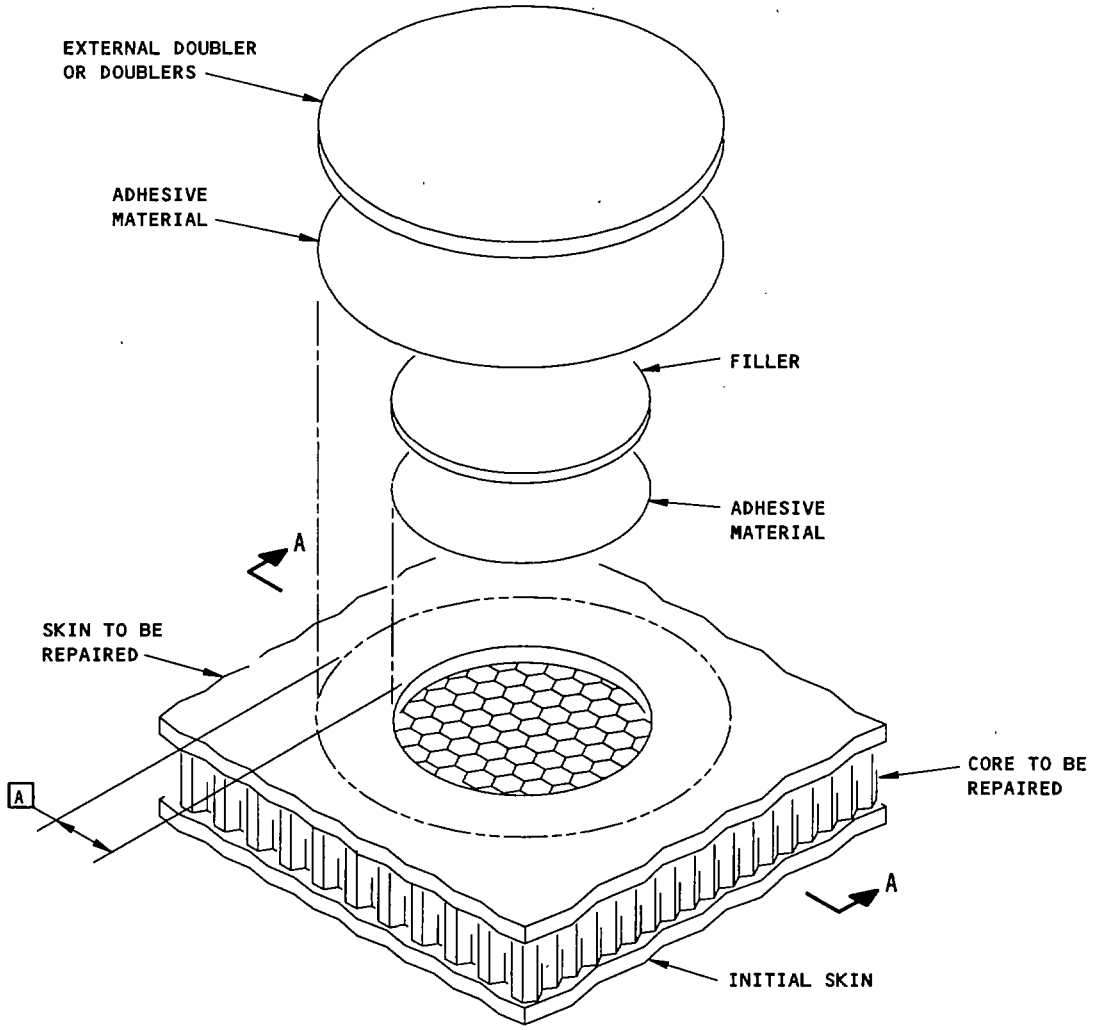

EXTERNAL DOUBLER AND FILLER REPAIR TO ONE SKIN

DETAIL I

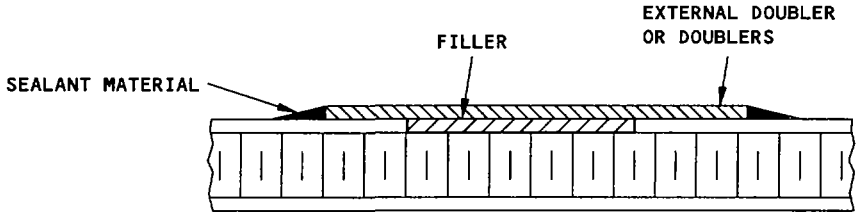

SECTION A-A

Repair of Damage Away From the Panel Edges
Figure 1 (Sheet 1)

BOEING PROPRIETARY - Copyright © - Unpublished Work - See title page for details.

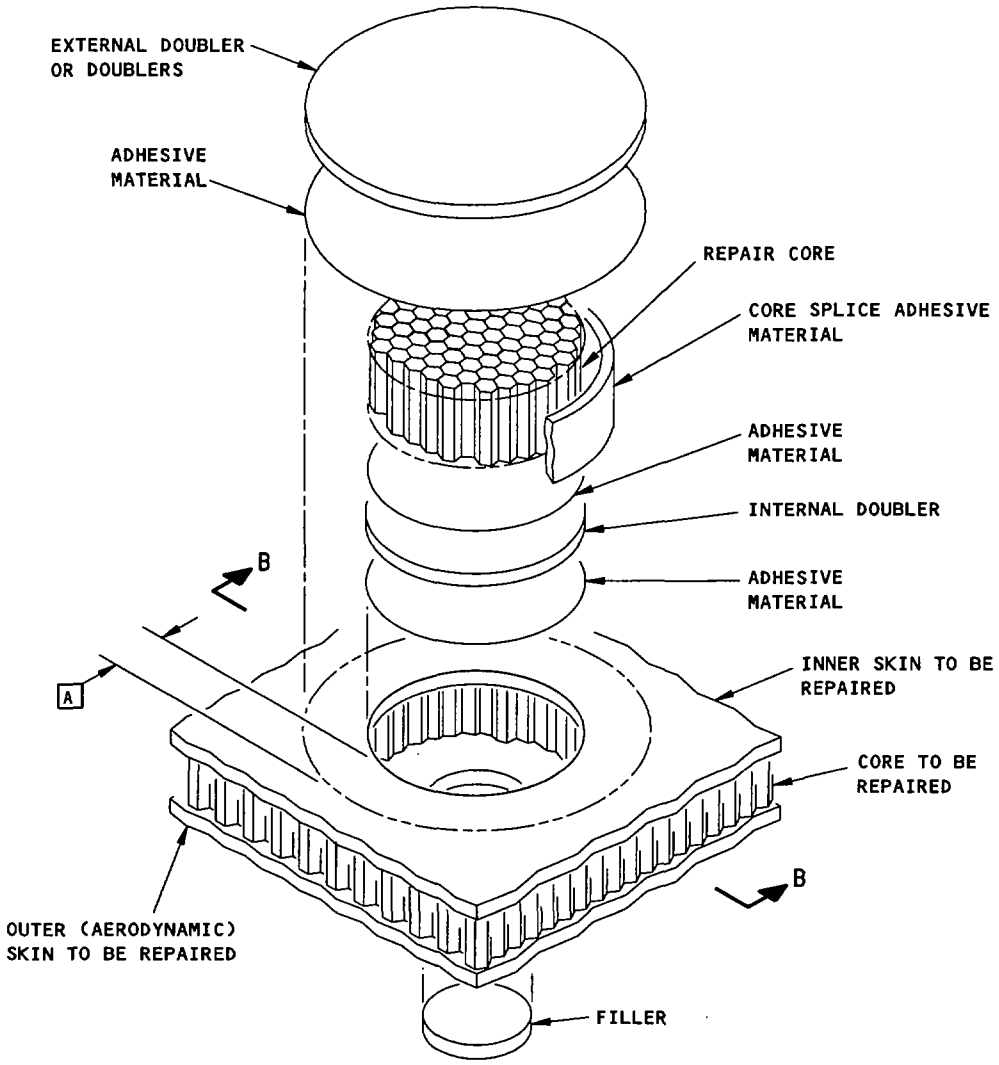

REPAIR TO CORE AND TWO SKINS
DETAIL II

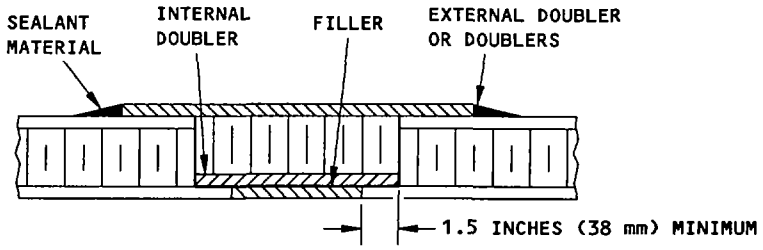

SECTION B-B

Repair of Damage Away From the Panel Edges
Figure 1 (Sheet 2)

BOEING PROPRIETARY - Copyright © - Unpublished Work - See title page for details.

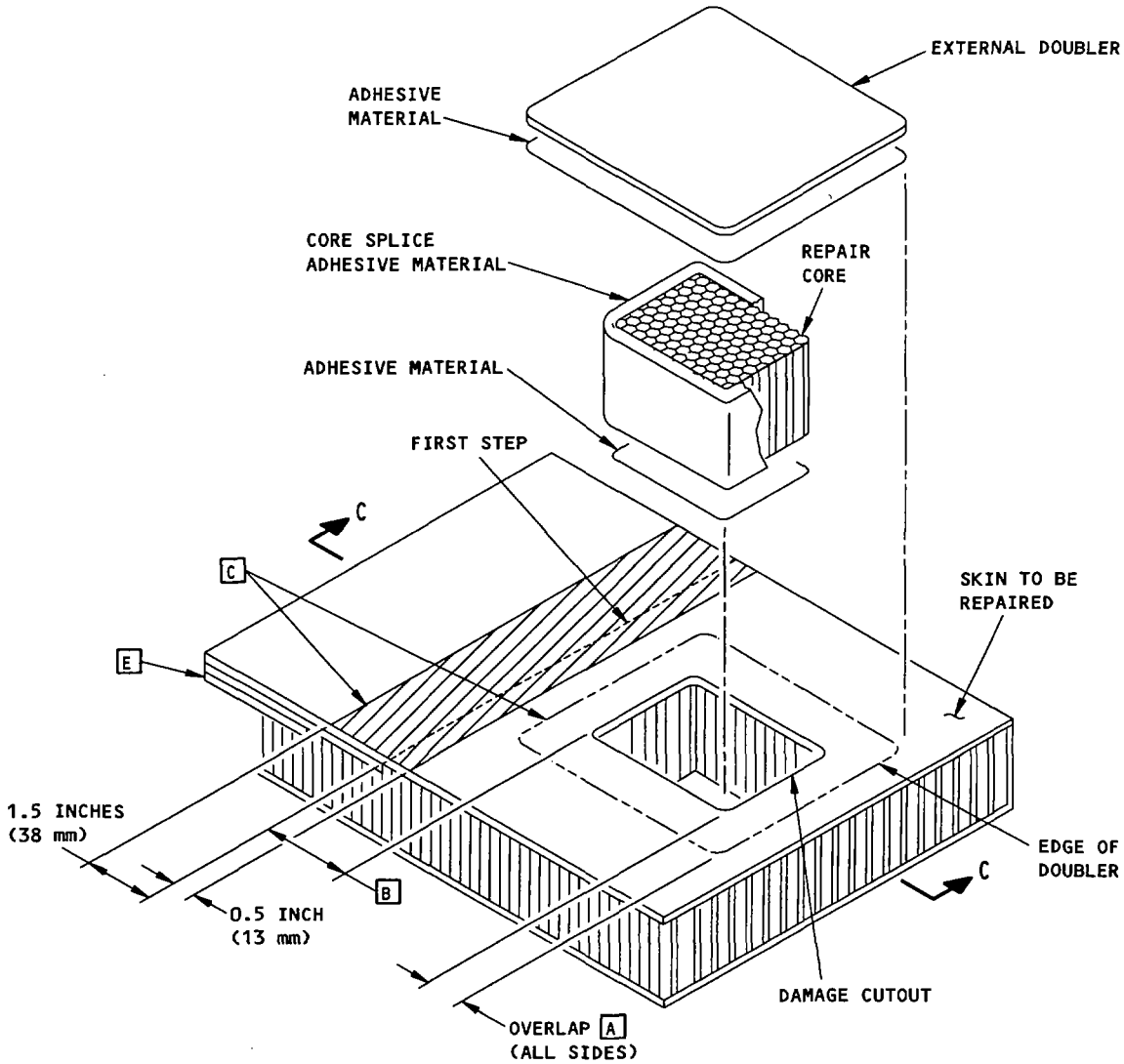

REPAIR NEAR AN INTERNAL DOUBLER
DETAIL III

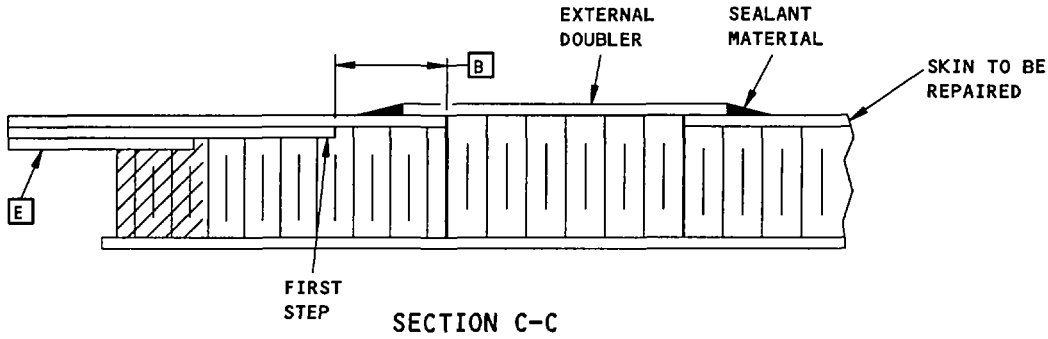

SECTION C-C

Repair of Damage Away From the Panel Edges
Figure 1 (Sheet 3)

BOEING PROPRIETARY - Copyright © - Unpublished Work - See title page for details.

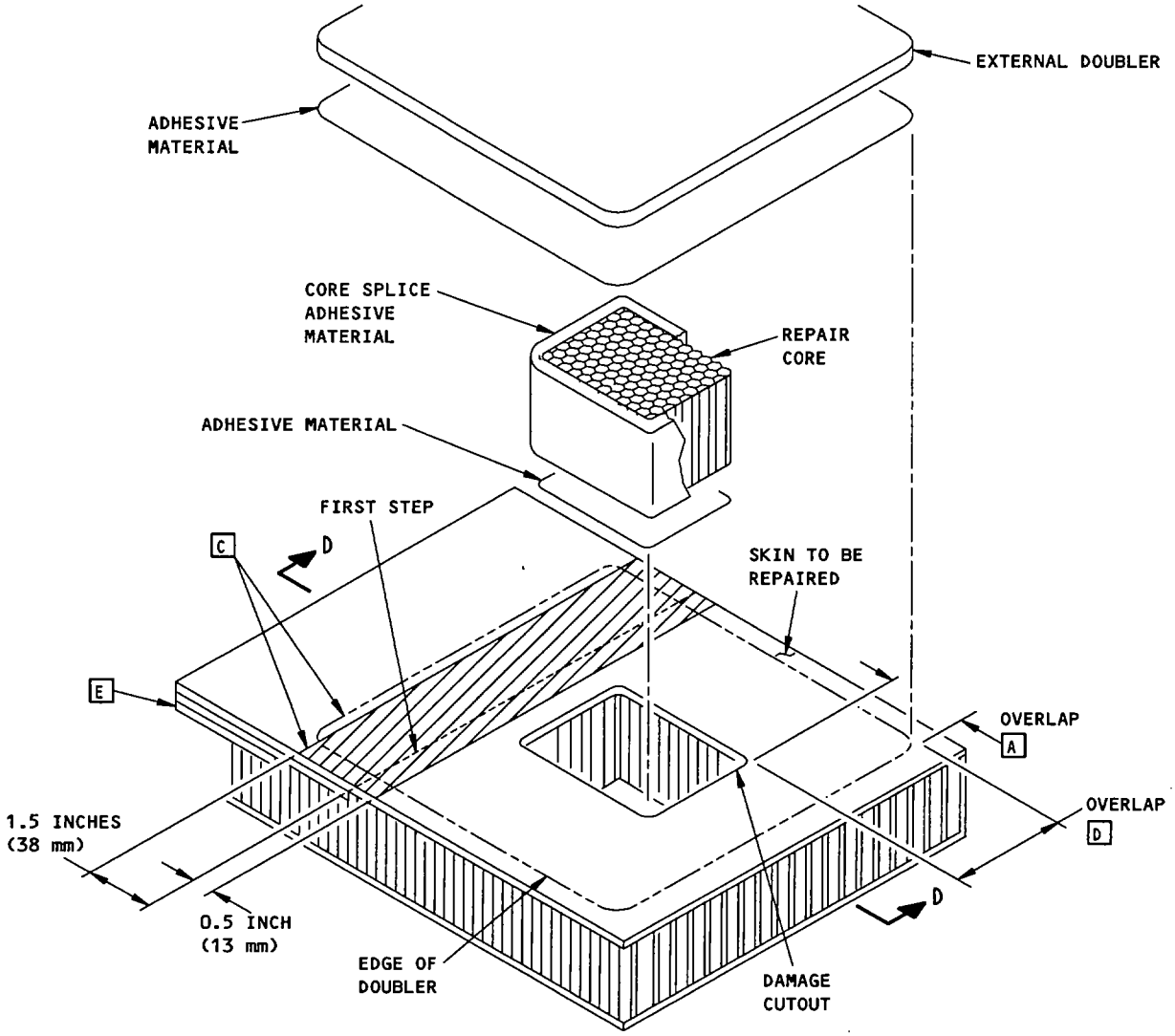

REPAIR TO PART OF AN INTERNAL DOUBLER
DETAIL IV

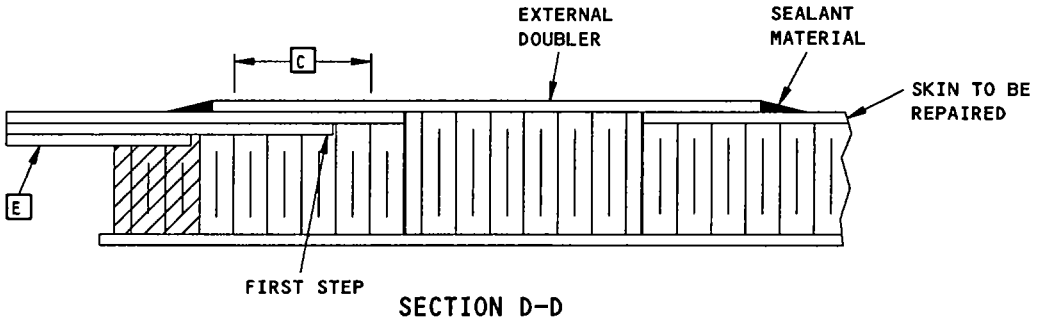

SECTION D-D

Repair of Damage Away From the Panel Edges
Figure 1 (Sheet 4)

BOEING PROPRIETARY - Copyright © - Unpublished Work - See title page for details.

NOTES

- REFER TO 51-40-20 FOR THE REPAIR STEPS.
- IT IS PERMITTED TO USE NDI PROCEDURES OR ENGINEERING DRAWINGS TO FIND THE LOCATIONS OF INTERNAL DOUBLERS AND MACHINED STEPS.

[A] REFER TO 51-40-20, FIG. 7 OR 8 (AS APPLICABLE) FOR THE MINIMUM OVERLAP DIMENSION.

[B] IF THE EDGE OF THE CUTOUT IS CLOSER THAN 0.5 INCHES (13 mm) TO THE EDGE OF AN INTERNAL DOUBLER (OR THE EDGE OF A CHEM-MILLED OR MACHINED STEP) THEN DO ONE OF THE STEPS THAT FOLLOW:

- REFER TO THE SPECIFIC COMPONENT REPAIR SECTION TO SEE IF THERE IS AN APPLICABLE REPAIR.
- CUT OUT THE DAMAGE TO THE EDGE OF THE PANEL AND THEN DO ONE OF THE REPAIRS IN 51-40-24, FIG. 2.
- ASK BOEING

[C] IF THE EDGE OF AN EXTERNAL DOUBLER WILL BE CLOSER THAN 0.5 INCH (13 mm) TO THE FIRST STEP, OR WILL NOT BE FARTHER THAN 1.5 INCHES (38 mm) PAST THE FIRST STEP, THEN SEE DETAIL IV AND DO THE STEPS THAT FOLLOW:

- EXTEND THE EXTERNAL DOUBLER SO THAT THE EDGE OF THE DOUBLER WHICH IS CLOSEST TO THE FIRST STEP IS FARTHER THAN 1.5 INCHES (38 mm) PAST THE EDGE OF THE FIRST STEP.

[D] INCREASE THE OVERLAP ON BOTH SIDES OF THE CUTOUT BY 0.5 INCH (13 mm).

[E] A PANEL WITH AN EDGEBAND THAT WAS MANUFACTURED WITH MULTIPLE DOUBLERS IS SHOWN. USE THE SAME PROCEDURE TO REPAIR A PANEL WITH A MACHINED OR CHEM-MILLED SKIN. IF AN INTERNAL DOUBLER IS DAMAGED, SEE [B].

Repair of Damage Away From the Panel Edges
Figure 1 (Sheet 5)

BOEING PROPRIETARY - Copyright © - Unpublished Work - See title page for details.

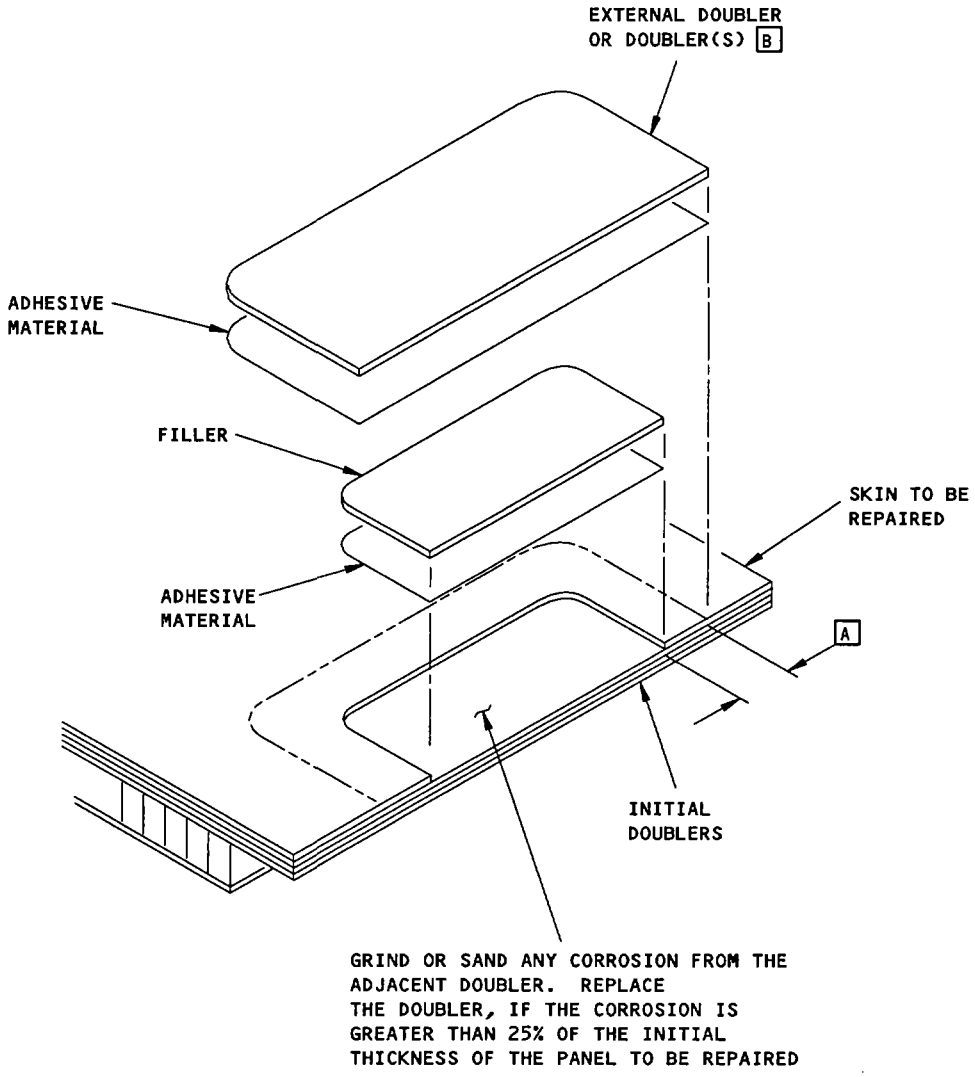

DETAIL I

Repair of Damage at the Edge of a Panel
Figure 2 (Sheet 1)

BOEING PROPRIETARY - Copyright © - Unpublished Work - See title page for details.

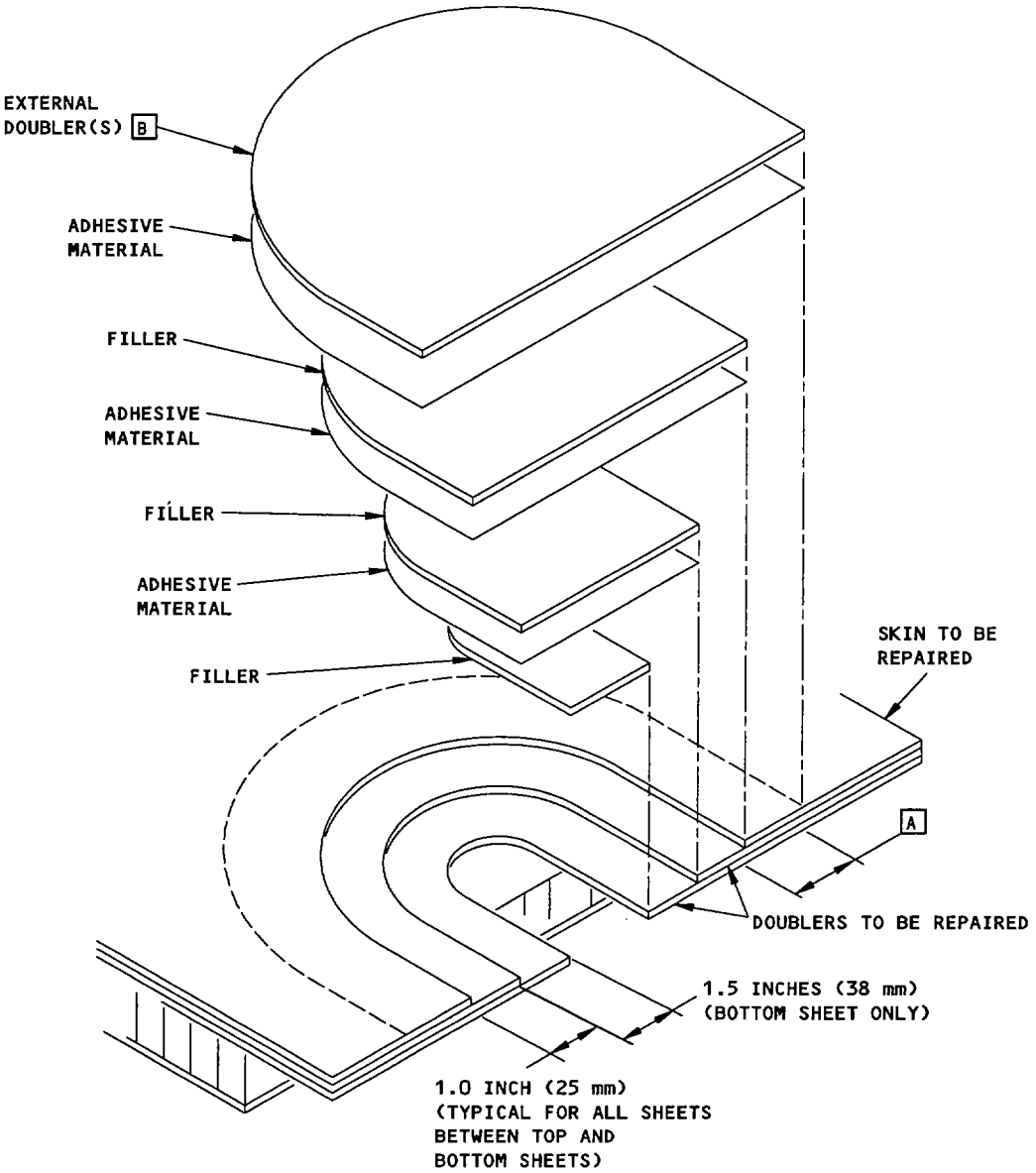

DETAIL II

Repair of Damage at the Edge of a Panel
Figure 2 (Sheet 2)

BOEING PROPRIETARY - Copyright © - Unpublished Work - See title page for details.

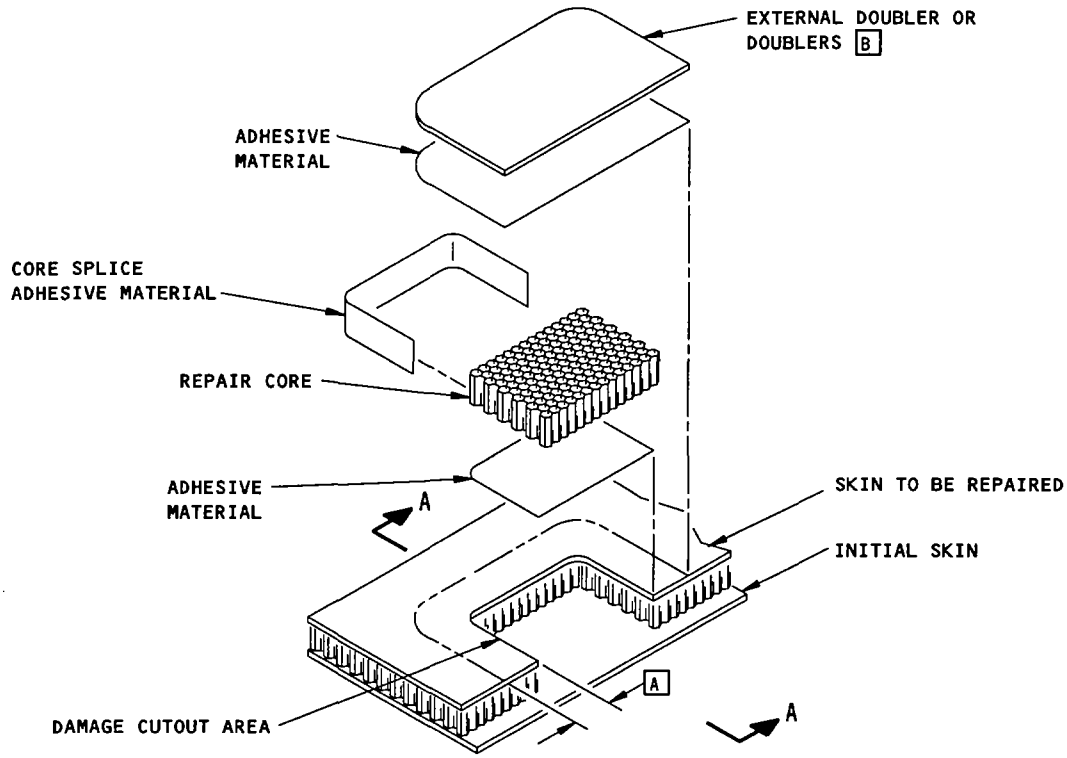

REPAIR TO ONE SKIN ONLY
(SQUARE EDGE CONFIGURATION)

DETAIL III

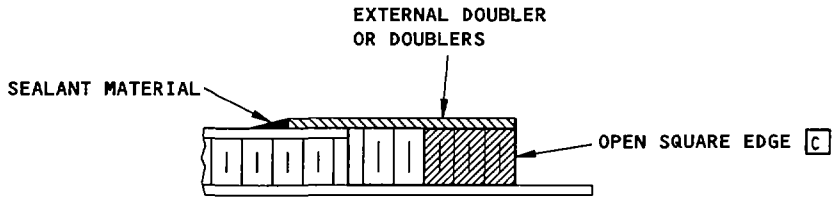

SECTION A-A

Repair of Damage at the Edge of a Panel
Figure 2 (Sheet 3)

BOEING PROPRIETARY - Copyright © - Unpublished Work - See title page for details.

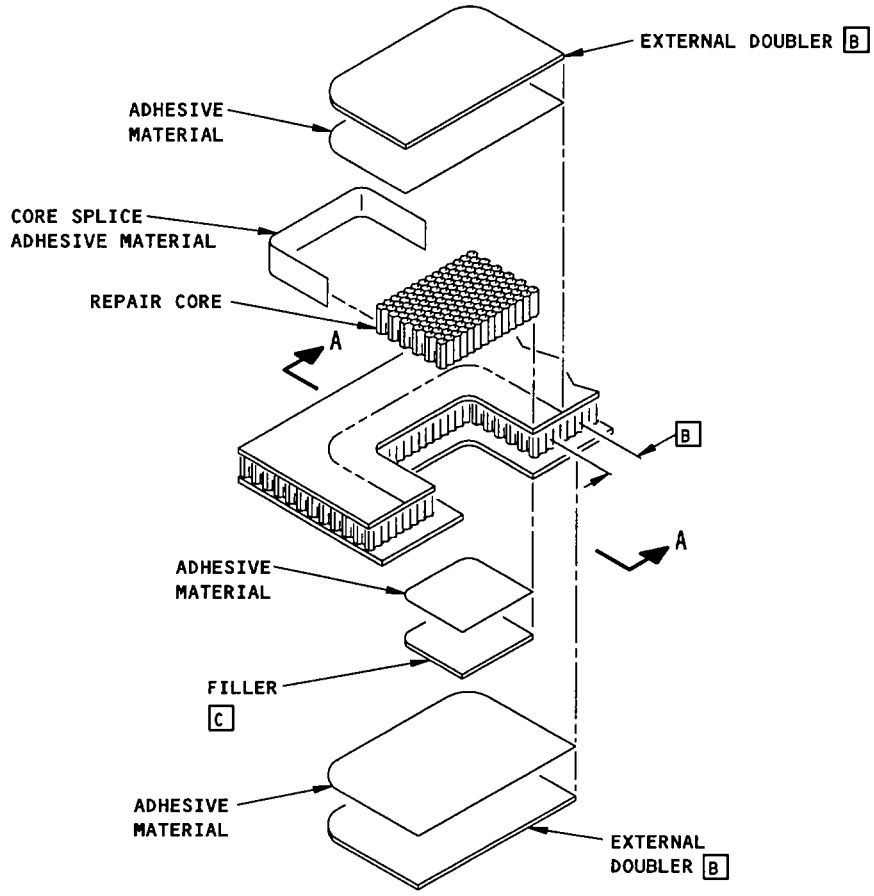

REPAIR TO BOTH SKINS
(SQUARE EDGE CONFIGURATION)

DETAIL IV

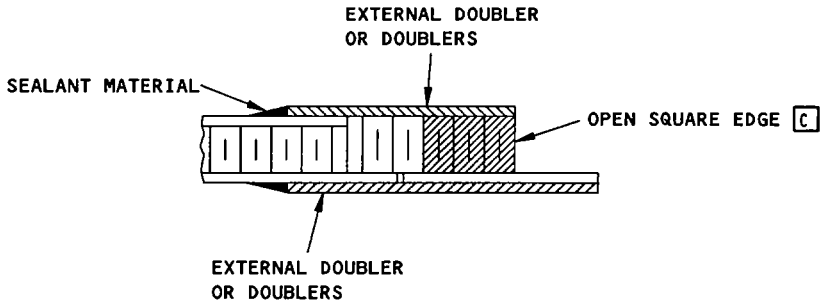

SECTION B-B

Repair of Damage at the Edge of a Panel
Figure 2 (Sheet 4)

BOEING PROPRIETARY - Copyright © - Unpublished Work - See title page for details.

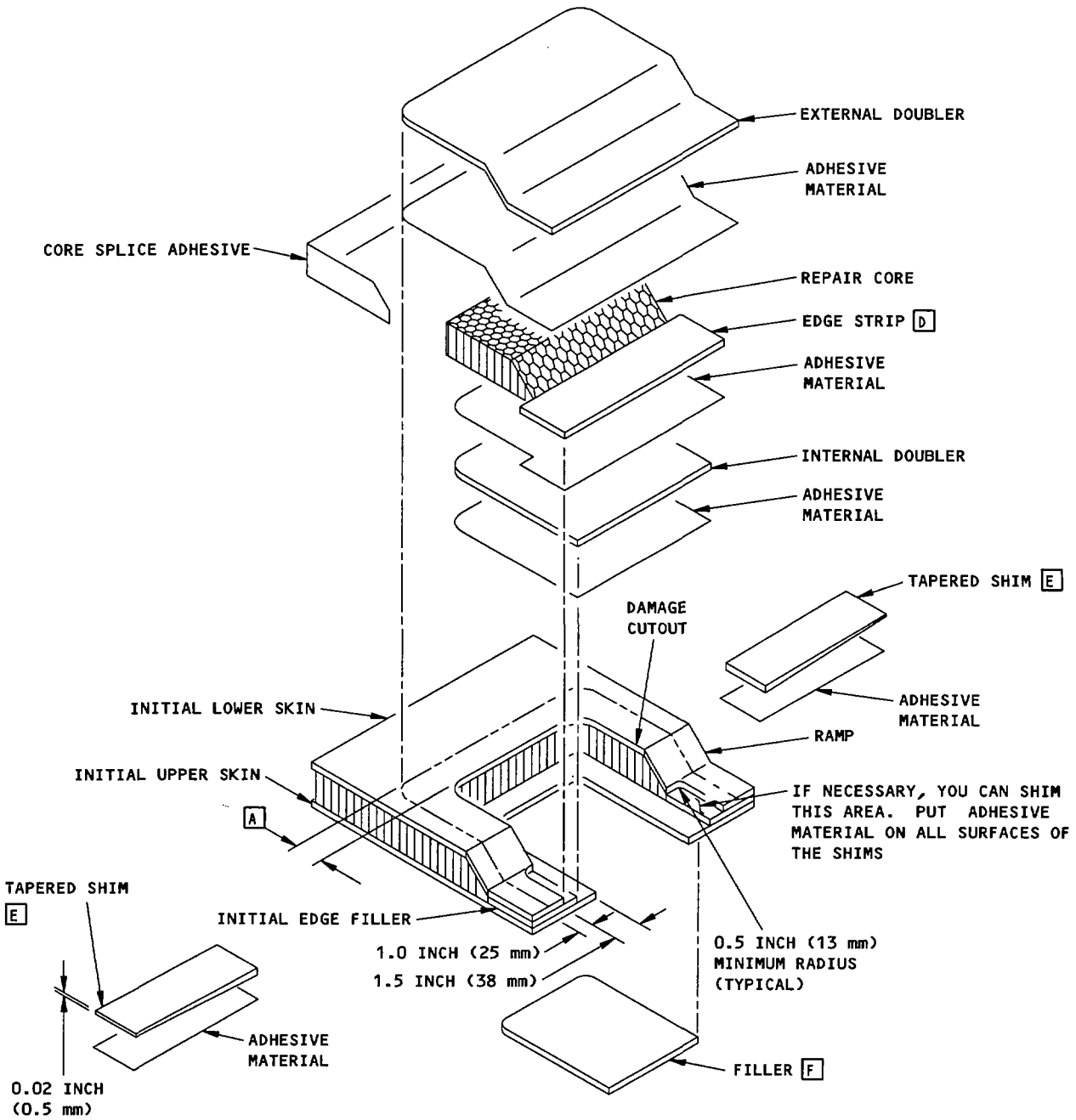

FLUSH REPAIR (RAMP CONFIGURATION)

DETAIL V

Repair of Damage at the Edge of a Panel
Figure 2 (Sheet 5)

BOEING PROPRIETARY - Copyright © - Unpublished Work - See title page for details.

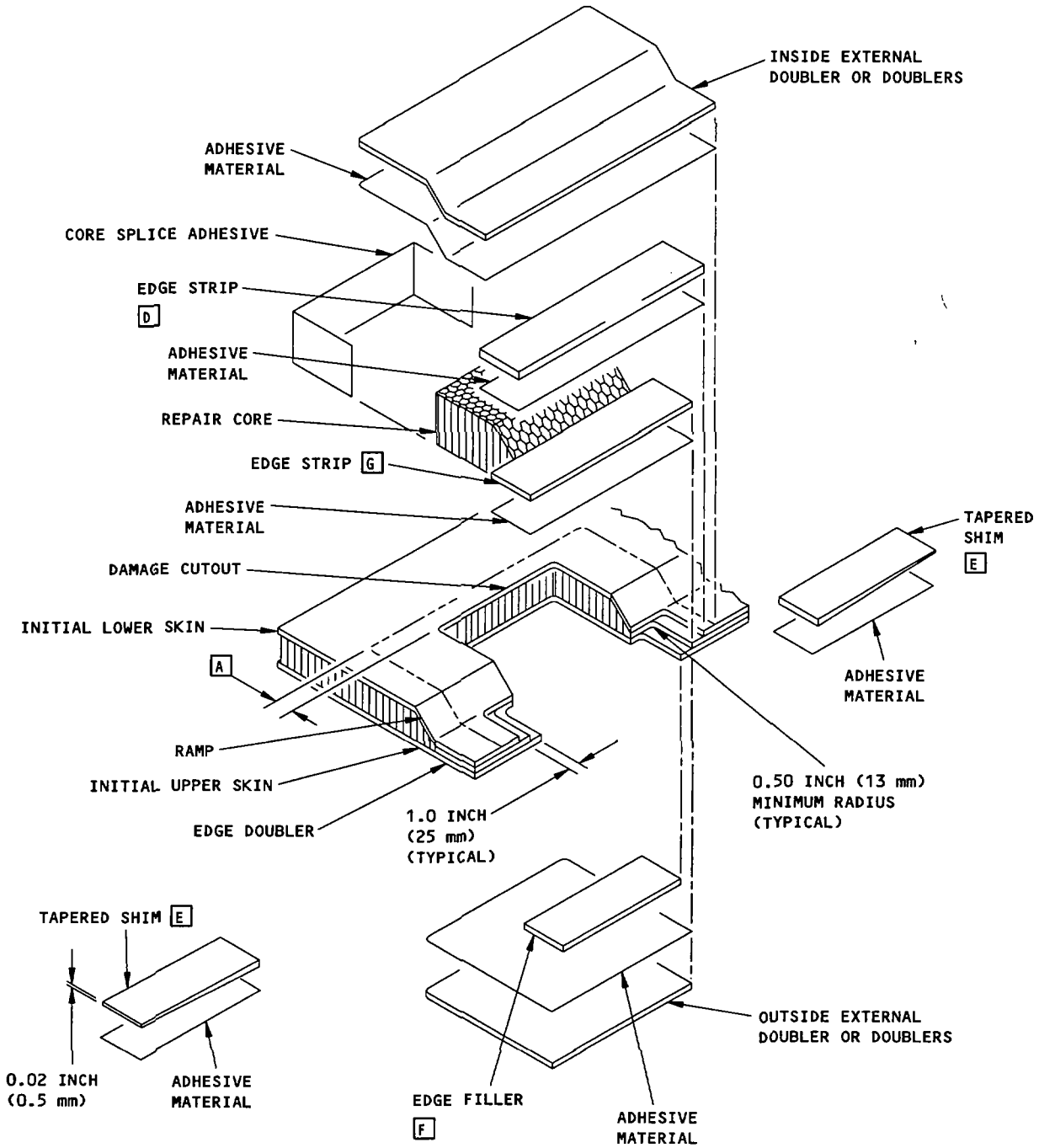

NON-FLUSH REPAIR (RAMP CONFIGURATION)
DETAIL VI

Repair of Damage at the Edge of a Panel
Figure 2 (Sheet 6)

BOEING PROPRIETARY - Copyright © - Unpublished Work - See title page for details.

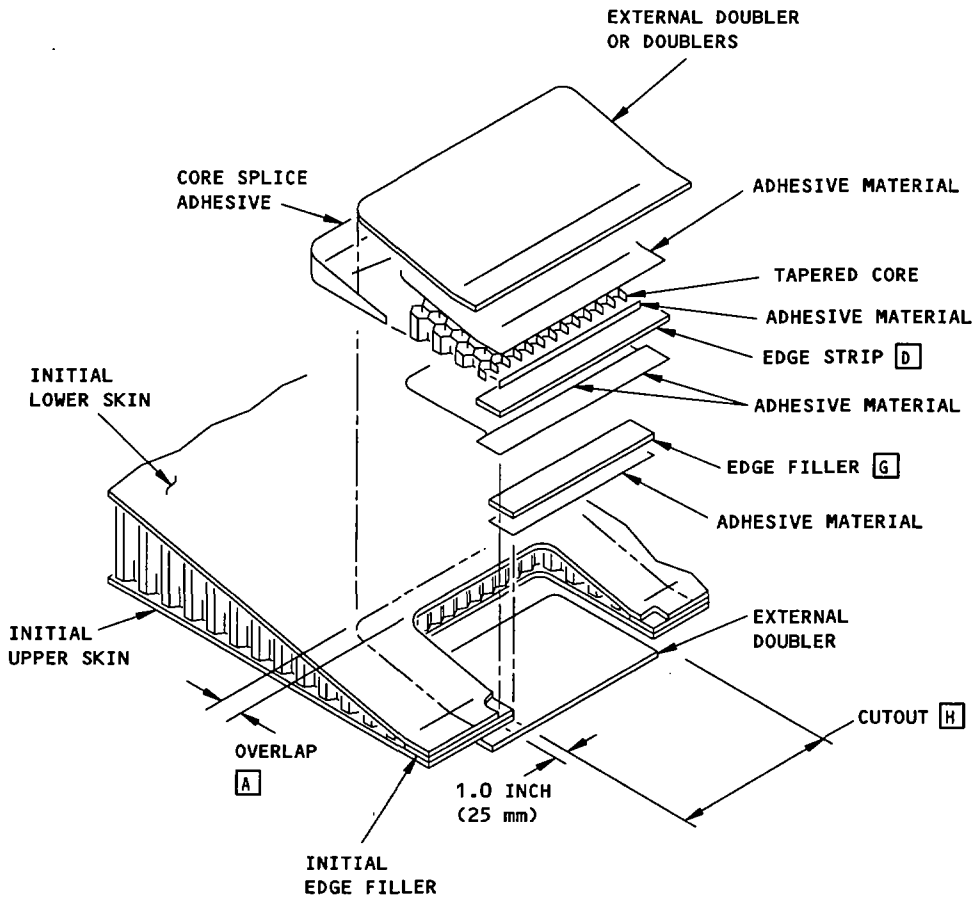

TRAILING EDGE REPAIR WITH TWO EXTERNAL DOUBLERS

DETAIL VII

Repair of Damage at the Edge of a Panel
Figure 2 (Sheet 7)

BOEING PROPRIETARY - Copyright © - Unpublished Work - See title page for details.

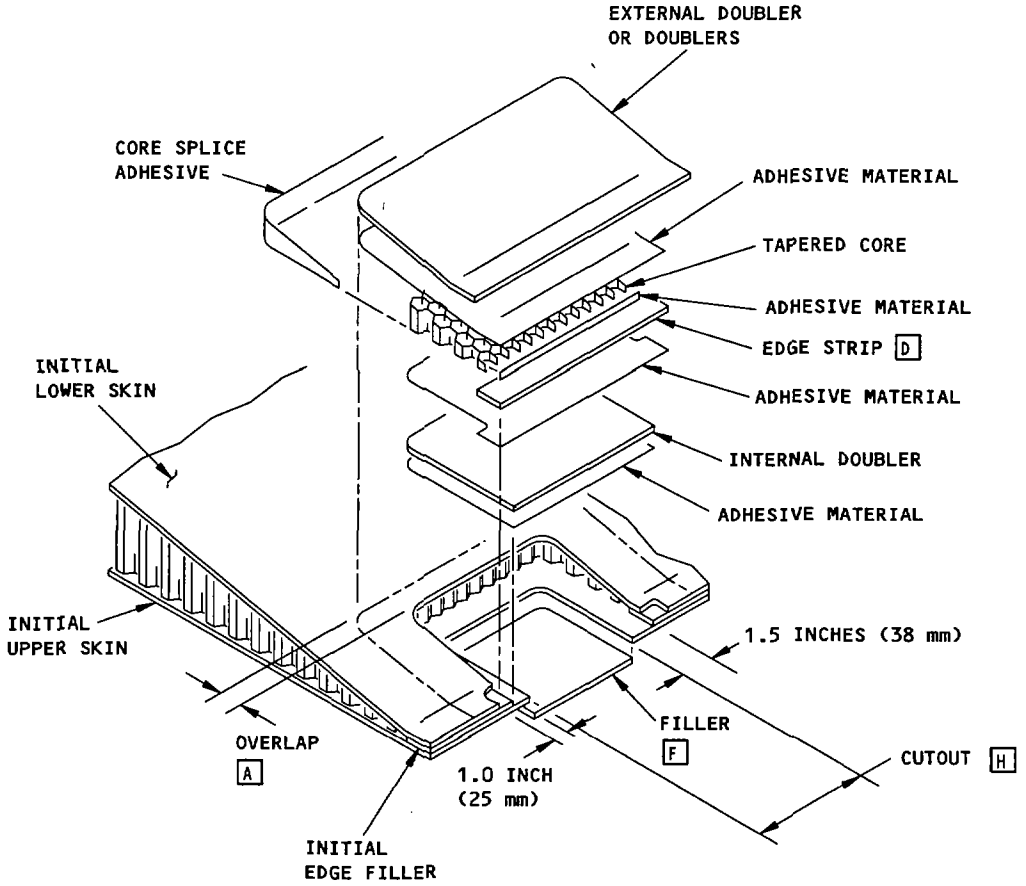

TRAILING EDGE REPAIR WITH AN EXTERNAL AND INTERNAL DOUBLER

DETAIL VIII

Repair of Damage at the Edge of a Panel
Figure 2 (Sheet 8)

BOEING PROPRIETARY - Copyright © - Unpublished Work - See title page for details.

NOTES

- REFER TO 51-40-20 FOR THE REPAIR STEPS

[A] REFER TO 51-40-20, FIG. 7 OR FIG. 8 (AS APPLICABLE) FOR THE MINIMUM OVERLAP DIMENSION.

[B] IF THE LENGTH OR WIDTH OF THE MATERIAL THAT IS REMOVED FROM THE OUTER SKIN IS 1.0 INCH (25 mm) OR LESS, THEN USE AN EXTERNAL DOUBLER(S) THICKNESS AS SPECIFIED IN 51-40-20, FIG. 8.

IF THE LENGTH OR WIDTH OF THE MATERIAL THAT IS REMOVED FROM THE OUTER SKIN IS MORE THAN 1.0 INCH (25 mm), THEN USE AN EXTERNAL DOUBLER(S) THICKNESS AS SPECIFIED IN 51-40-20, FIG. 8 FOR AN INITIAL SKIN THICKNESS THAT IS ONE GAGE RANGE THICKER.

[C] SEAL THE OPEN EDGE OF THE REPAIR CORE AS GIVEN IN 51-40-20, PAR. 9.F.

[D] MAKE THE EDGE FILLER FROM THE SAME BOEING MATERIALS SPECIFICATION (BMS) MATERIAL OR AN EQUIVALENT MATERIAL THAT IS THE SAME THICKNESS AS THE INITIAL UPPER OR LOWER SKIN AS APPLICABLE.

[E] PUT THE TAPERED SHIMS NEXT TO THE INSIDE EXTERNAL DOUBLER ON THE EDGE BAND.

[F] MAKE THE FILLER FROM THE SAME BOEING MATERIALS SPECIFICATION (BMS) MATERIAL OR AN EQUIVALENT MATERIAL THAT IS THE SAME THICKNESS AS THE INITIAL UPPER OR LOWER SKIN AS APPLICABLE.

[G] MAKE THE EDGE FILLER FROM THE SAME THICKNESS AS THE INITIAL EDGE FILLER.

[H] THE MAXIMUM PERMITTED WIDTH OF CUTOUT IN THE TRAILING EDGE IS 50% OF THE TOTAL INITIAL WIDTH. IF MORE THAN 50% OF THE WIDTH IS DAMAGED, THEN DO THE STEPS THAT FOLLOW:

- GET AN ENGINEERING REVIEW
- USE APPROVED ENGINEERING DRAWINGS FOR THE COMPONENT
- USE APPROVED MATERIALS AND MANUFACTURING PROCESSES SPECIFIED IN THE COMPONENT ENGINEERING DRAWINGS.

Repair of Damage at the Edge of a Panel
Figure 2 (Sheet 9)

BOEING PROPRIETARY - Copyright © - Unpublished Work - See title page for details.

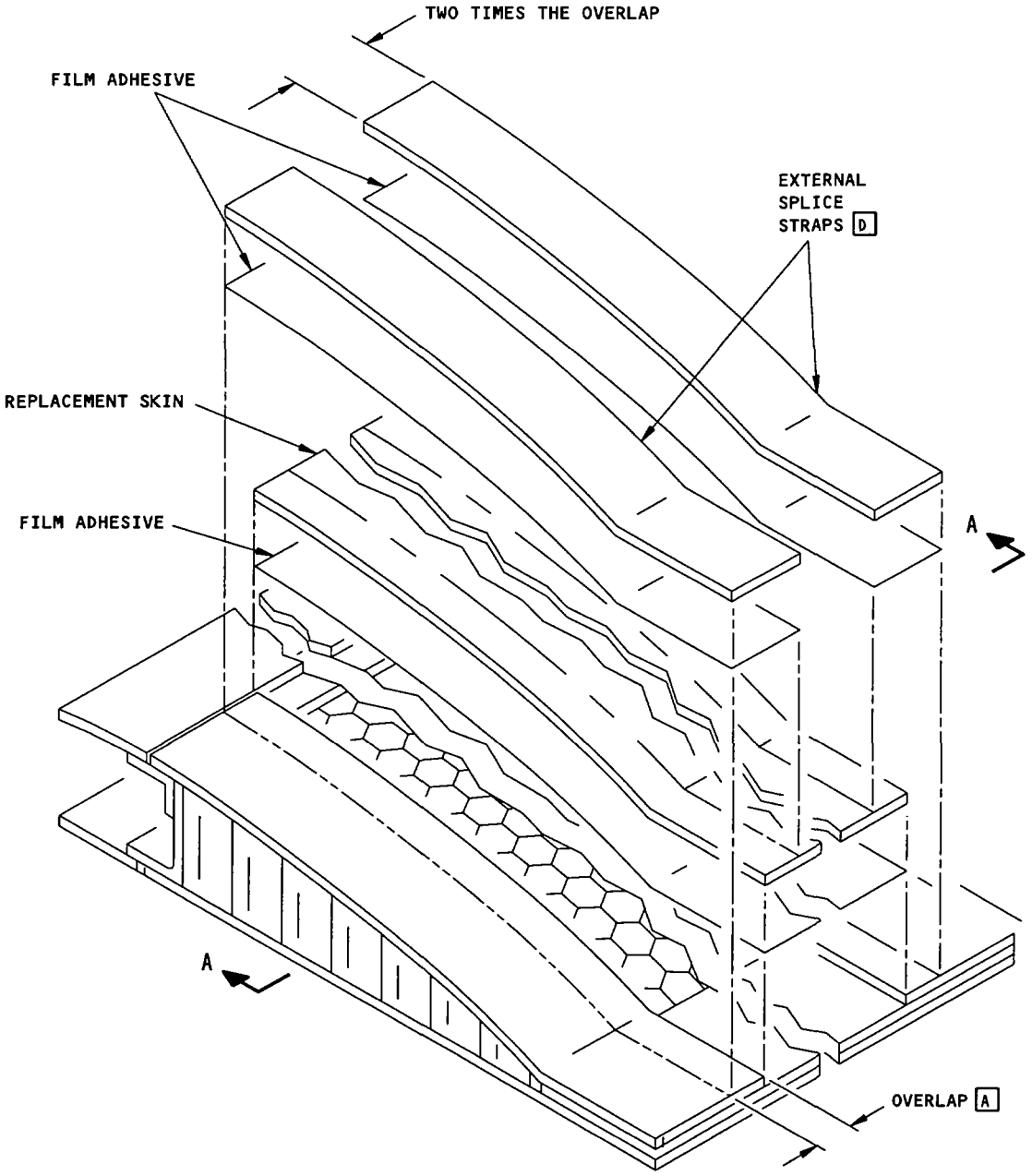

REPAIR TO ONE SKIN ONLY
DETAIL I

Repair of Damage That is from Edge to Edge
Figure 3 (Sheet 1)

BOEING PROPRIETARY - Copyright © - Unpublished Work - See title page for details.

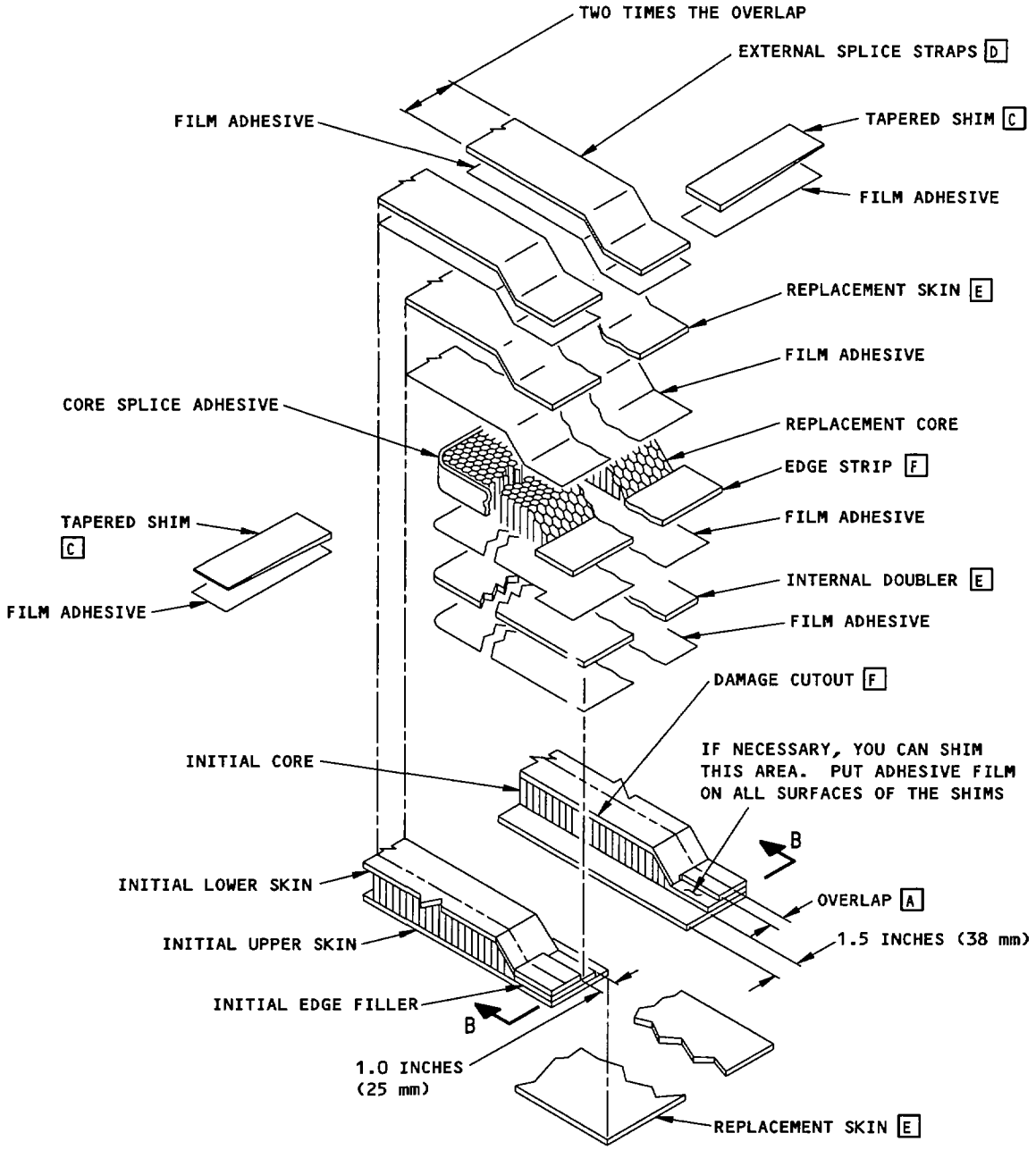

REPAIR TO TWO SKINS AND CORE
(REPLACEMENT CORE FLUSH WITH INITIAL CORE)

DETAIL II

Repair of Damage That is from Edge to Edge
Figure 3 (Sheet 2)

BOEING PROPRIETARY - Copyright © - Unpublished Work - See title page for details.

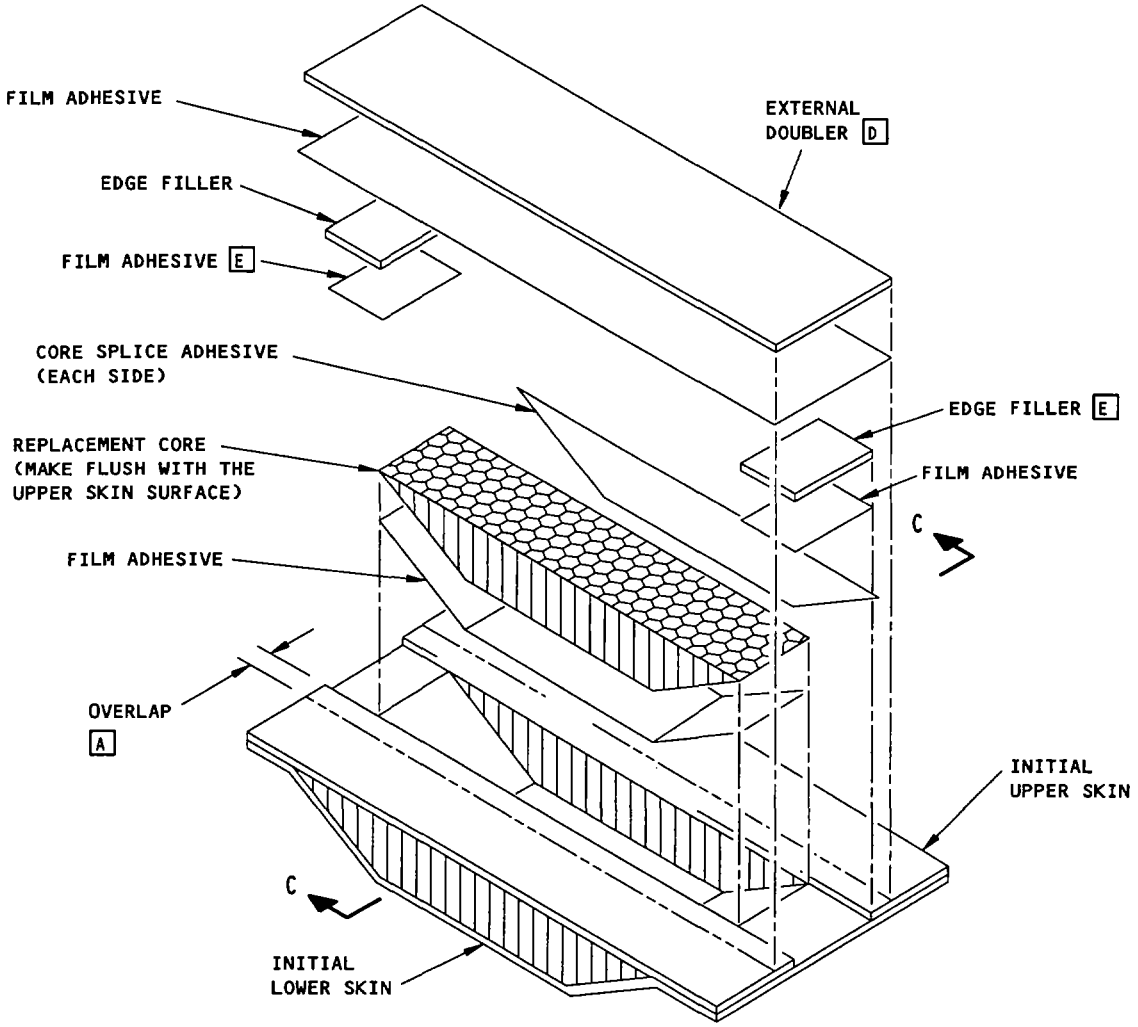

REPAIR TO ONE SKIN AND CORE
(REPLACEMENT CORE FLUSH WITH AN INITIAL SKIN)

DETAIL III

Repair of Damage That is from Edge to Edge
Figure 3 (Sheet 3)

BOEING PROPRIETARY - Copyright © - Unpublished Work - See title page for details.

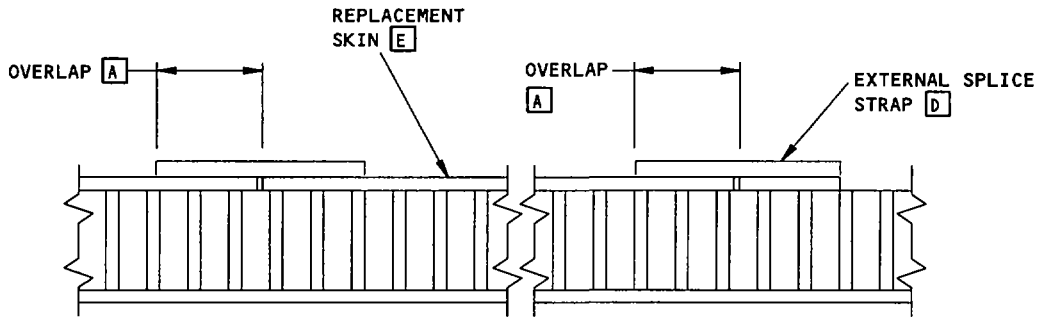

SECTION A-A

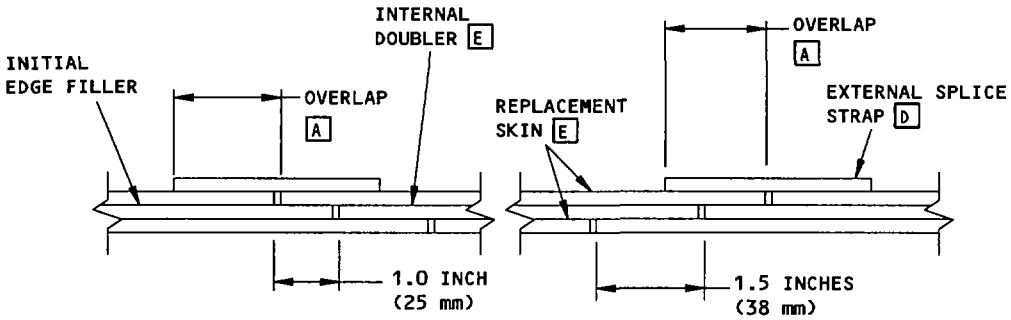

SECTION B-B

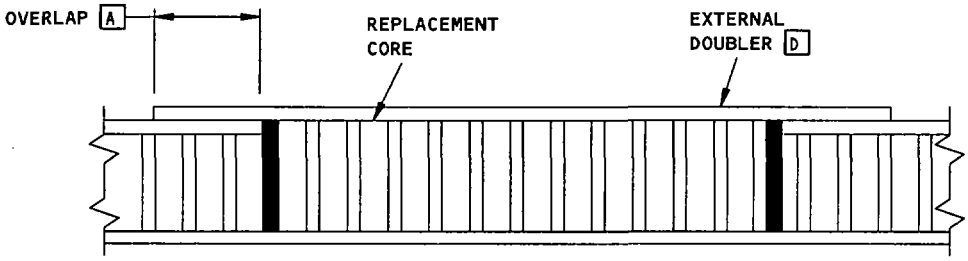

SECTION C-C

Repair of Damage That is from Edge to Edge
Figure 3 (Sheet 4)

BOEING PROPRIETARY - Copyright © - Unpublished Work - See title page for details.

NOTES

- REFER TO 51-40-20 FOR THE REPAIR STEPS.

A REFER TO 51-40-20, FIG. 7 OR FIG. 8 (AS APPLICABLE) FOR THE MINIMUM OVERLAP DIMENSION.

B USE SHIMS IF NECESSARY.

C PUT A TAPERED SHIM NEXT TO EACH OF THE INSIDE EXTERNAL DOUBLERS ON THE EDGEBAND.

D REFER TO 51-40-20, FIG. 7 OR 8 FOR DOUBLER THICKNESS.

E MAKE FROM THE SAME BOEING MATERIALS SPECIFICATION (BMS) MATERIAL OR AN EQUIVALENT MATERIAL THAT IS THE SAME THICKNESS AS THE INITIAL UPPER OR LOWER SKIN AS APPLICABLE.

F MAKE FROM THE SAME THICKNESS AS THE INITIAL EDGE FILLER.

G AS AN ALTERNATIVE, YOU CAN CUT THE INITIAL SKIN AWAY FROM THE EDGE OF THE CORE. THERE IS NO MINIMUM OR MAXIMUM DISTANCE FROM THE EDGE OF THE THE SKIN TO THE EDGE OF THE CORE.

Repair of Damage That is from Edge to Edge
Figure 3 (Sheet 5)

BOEING PROPRIETARY - Copyright © - Unpublished Work - See title page for details.

REPAIR GENERAL - TITANIUM SURFACE PREPARATION PROCEDURES

1. Applicability

   A. This subject gives instructions to prepare a titanium surface for bonding.

   B. Only use this procedure if an SRM repair section or an approved repair plan refers to this subject.

   C. Do not use this procedure for a rebuild or remanufacture of Boeing airplane structure.

2. General

   A. Refer to the SRM component repair section for:
   - The identification of the materials and the references to the engineering drawings
   - The allowable damage data
   - The references to this subject
   - The types of repairs that are permitted and/or the repair size limits (When applicable)
   - Other data that is not given in this subject

   B. In this subject are the instructions for:
   - Damage removal
   - Surface preparation procedures for titanium
   - Application of adhesive primers

3. References

Reference	Title
51-00-6	Structural Repair Definitions
51-10-1	Inspection and Removal of Damage
51-20-1	Sheet Metal Materials
51-40-19	Glass Fabric Strengthened epoxy Laminates and nonmetallic honeycomb sandwich Repairs - 250°F (121°C) Cure
51-40-14	Graphite Aramid and Graphite/Aramid/Glass Fabric Hybrid Reinforced epoxy Laminates and nonmetallic honeycomb sandwich Repairs - 350°F (177°C) Cure
51-40-20	Metal Bond - Aluminum Honeycomb structure
SOPM 20-30-03	General Cleaning Procedures
737 NDT Part 1, 51-04-00	Ultrasonic
737 NDT Part 1, 51-05-01	Tap Test Inspection of Honeycomb Sandwich Structure

4. Definitions

   A. Boegel (AC130)

      (1) A type of complex inorganic polymer from the sol-gel family of chemical compounds.

   B. Damage

      (1) Change to the surface of a part that is caused by disbonds, erosion, dents, gouges, cracks, scratches, punctures and holes.

BOEING PROPRIETARY - Copyright © - Unpublished Work - See title page for details.

C. Disbond

(1) The failure of a bond adhesive that causes separation between a skin and doubler.

D. Rebuild/Remanufacture

(1) The damage is too large to use repair procedures and materials (manufacturing procedures are necessary). Permission from Boeing and your local regulatory agency can be necessary because of intellectual property, certification, quality control, and safety rules.

NOTE: With permission, you can use the Boeing engineer drawings, material specifications, and process specifications.

E. More sources of definitions

(1) 51-00-6

(2) 51-10-1

5. Repair Summary

A. To make a satisfactory surface preparation, you must do what follows:

(1) Remove all the contamination from the part.

(2) Use the correct materials.

(3) Do the bond procedures in a clean, dry location.

(4) Make the bond surfaces clean.

(5) Do a satisfactory surface preparation.

(6) Make sure that all of the parts have the correct shape and dimensions.

(7) Make sure that the repair parts have the correct flatness or curvature. The parts must install correctly when you apply light finger pressure.

B. Identify the material containers with a label that contains the data that follows:

(1) BMS Specification

(2) Type

(3) Supplier Name

(4) Batch Number

(5) Date of preparation

BOEING PROPRIETARY - Copyright © - Unpublished Work - See title page for details.

C. Make sure that you do the bond procedures in a clean, dry location (a location that does not have contamination from exhaust fumes, rain, or other unwanted materials). Make sure that shop compressed air does not have water, oil, or other contamination. Use Boeing Specification Support Standard BSS 7217 "Air Cleanliness, Shop Compressed Air" (or the equivalent specification) to see if the shop compressed air is satisfactory.

NOTE: You can make a tent to seal the area from contamination.

WARNING: USE MECHANICAL AIRFLOW AND BREATHING PROTECTION WHEN YOU WORK IN A CLOSED SPACE OR AREA. MAKE SURE THAT THE FRESH AIR SUPPLY IS NOT BLOCKED. IF YOU GET FLUIDS IN YOUR EYES, FLUSH WITH WATER IMMEDIATELY AND GET MEDICAL AID.

D. Read the manufacturer's safety data sheet (MSDS) for each of the materials you use in this procedure. Wear protective clothing and equipment if it is specified in the MSDS.

E. Read each CAUTION in this procedure. They will help to prevent damage to the repair and prevent more damage to the airplane part.

F. Read each WARNING in this procedure. They will help to prevent injury to you and others.

6. Find the Limits of the Damage

A. Examine the damage in the repair area.

WARNING: DO NOT GET SOLVENTS IN YOUR MOUTH, YOUR EYES, OR ON YOUR SKIN. DO NOT BREATHE THE FUMES FROM SOLVENTS. SOLVENTS ARE DANGEROUS MATERIALS. SOLVENTS CAN BE FLAMMABLE OR CAUSE DAMAGE TO THE ENVIRONMENT. REFER TO THE MATERIAL SAFETY DATA SHEETS (MSDS) AND THE LOCAL SAFETY PRECAUTIONS.

(1) Clean the damaged area with a soft cloth moist with cleaning solvent. Refer to SOPM 20-30-03 for the applicable cleaning solvent and general cleaning procedures.

CAUTION: USE NON-DESTRUCTIVE PROCEDURES TO MAKE SURE THAT THERE IS NO WATER TRAPPED IN THE PART BEFORE YOU APPLY HEAT TO CURE THE ADHESIVES. DAMAGE TO THE PART WILL OCCUR IF THE WATER IS NOT REMOVED.

(2) Do a visual and NDI examination of the damaged area to find disbonds and other types of damage to the structure.

NOTE: Refer to 737 NDT Part 1, 51-04-00 for instrumented NDI procedures, or 737 NDT Part 1, 51-05-01 for tap test procedures.

B. Examine the initial adhesive primer (if applicable).

(1) It is not necessary to remove the initial adhesive primer from the bond surface if the primer has the conditions that follow:

(a) There is no contamination from paints, oils, chemicals, or other unwanted materials.

BOEING PROPRIETARY - Copyright © - Unpublished Work - See title page for details.

(b) There are no scratches or missing primer that:

1) Show more than 0.1 square inch (65 square mm) of bare metal.

2) Are more than 0.5 inch (13 mm) in length.

3) Are less than 0.5 inch (13 mm) from an edge.

4) Are less than 3.0 inches (75 mm) (edge-to-edge) apart.

(2) In these small areas where there is bare metal or missing primer, do the steps that follow:

(a) Clean the bare metal. Refer to SOPM 20-30-03 for the applicable solvents.

(b) Apply BMS 5-89, Type II adhesive primer to the bare metal. Refer to SRM 51-40-20.

(3) If more adhesive primer is damaged or removed than is permitted, then remove the primer and do the Boegel surface preparation and primer spray application again.

7. Remove the Damage

NOTE: Use a table or special tool to keep the part in the correct shape if you remove large areas of damage.

A. Remove the damaged metal from the repair area.

NOTE: As an alternative, you can do a surface preparation and apply the adhesive primer on the surface before you remove the damage. Make sure that you prepare an area that is larger than the necessary minimum bond area. This will give you a sufficient bond area if the removed damage is larger than the NDI indication.

WARNING: DO NOT USE EQUIPMENT THAT CAN CAUSE AN ARC OR A SPARK IN AN AREA WHERE THE IGNITION OF FUMES IS POSSIBLE. IF YOU DO, AN EXPLOSION CAN BE THE RESULT.

(1) If the metal is damaged or has disbonded areas, do the procedure that follows:

(a) Cut and remove the damaged skin in the disbonded areas.

(b) Separate the bonded structures (if applicable and necessary). Refer to Figure 1 for the steps that follow:

1) Make the wedge(s).

2) Use polyester tape to attach an approximately 0.02-0.06 inch (0.5-1.5 mm) thick metal or plastic sheet adjacent to the bonded area.

BOEING PROPRIETARY - Copyright © - Unpublished Work - See title page for details.

WARNING: USE DRY ICE OR COMPRESSED CARBON DIOXIDE GAS ONLY IN AN AREA WHERE THERE IS A SATISFACTORY FLOW OF AIR. HIGH LEVELS OF CARBON DIOXIDE CAN CAUSE INJURY. WEAR PROTECTIVE GLOVES. IF DRY ICE TOUCHES YOUR SKIN OR EYES, GET MEDICAL AID IMMEDIATELY.

3) Push the wedge(s) between the bonded structures. Lightly tap the wedge(s) if necessary.

a) If problems occur, you can apply heat, dry ice (solid carbon dioxide), compressed carbon dioxide gas, or liquid nitrogen to the bond area. This will make the adhesive resin brittle and easier to separate.

(c) Do a check to see if the bond is weak along the perimeter of the area to be repaired.

NOTE: Instrumented Non-destructive Inspection (NDI) procedures will not always find a bond that is weak but not broken.

1) Pull carefully on the edge of the bonded structure to see if the bond will break.

2) If the bond is easily broken, then continue to remove the bonded structure until the bonds are not easily broken.

(2) Remove all the nicks, scratches, gouges, burrs, sharp edges and other unwanted material to a smooth surface.

NOTE: A facesheet (skin) can have more than one sheet bonded together. Be careful not to cause damage to the sheet(s) below the damaged sheet(s).

(3) Examine the damaged area for signs of oil, fuel, dirt or other contamination. Remove all fluids, dirt and other contamination.

B. Make all the corners of large cutouts a minimum of 1.0 inch (25 mm) radius.

C. Refer to the component engineering drawings or use NDI procedures to find the locations of internal doublers and other repairs.

8. Make the repair parts

WARNING: USE ONLY EXPLOSION-PROOF EQUIPMENT WHEN YOU DO THESE TYPES OF REPAIRS. IF YOU DO NOT, PERSONAL INJURY AND DAMAGE TO ADJACENT EQUIPMENT CAN BE THE RESULT. WHEN YOU WORK WITH FLAMABLE MATERIALS, HEAT, FIRE OR SPARKS CAN CAUSE AN EXPLOSION.

A. Make the repair doublers and fillers from material that is the same or an equivalent alloy material and heat treatment as the initial skin. Refer to 51-20-1 for the approved procedures for machining and bending of Titanium.

(1) Remove all the nicks, scratches, gouges, burrs, sharp edges, and other unwanted material from the repair doublers and fillers.

BOEING PROPRIETARY - Copyright © - Unpublished Work - See title page for details.

WARNING: DO NOT GET SOLVENTS IN YOUR MOUTH, YOUR EYES, OR ON YOUR SKIN. DO NOT BREATHE THE FUMES FROM SOLVENTS. SOLVENTS ARE DANGEROUS MATERIALS. SOLVENTS CAN BE FLAMMABLE. OBEY THE MATERIAL SAFETY DATA SHEETS (MSDS) FOR SOLVENTS. OBEY LOCAL REGULATIONS FOR THE CORRECT PROCEDURES TO USE OR DISCARD SOLVENTS. SOLVENTS CAN CAUSE INJURIES TO PERSONNEL AND DAMAGE TO EQUIPMENT.

B. Clean the repair doublers and fillers that do not have primer applied to the surface.

9. The Boegel (AC-130) Prebond Treatment Procedure

NOTE: The Boegel (AC-130) Prebond Treatment materials must be purchased from an approved Boeing licensed supplier.

A. Do a Boegel surface preparation procedure only on titanium surfaces that are not primed. Remove all unwanted primer and other material before you continue with the procedure.

B. The materials that you need are:

(1) AC-130 Sol-Gel Kit (Source: Advanced Chemistry and Technology, 7341 Anaconda Avenue, Garden Grove, CA 92841, 800-732-4470)

(2) Cheesecloth, gauze or clean cotton rags, or BMS 15-5, Class A wipers

(3) Acetone or Methyl Propyl Ketone (MPK) Solvent

(4) Scotch Brite, Type A, very fine pads or a high grade alumina sand paper (180-grit or finer).

(5) Aluminum oxide abrasive grit, 50 to 76 micron (No. 280 to No. 180 grit).

(6) BMS 5-89 Type II (BR 6747-1) Adhesive Primer

C. Prepare the repair area for the Boegel (AC-130) Prebond Treatment procedure.

WARNING: DO NOT GET SOLVENTS IN YOUR MOUTH, YOUR EYES, OR ON YOUR SKIN. DO NOT BREATHE THE FUMES FROM SOLVENTS. SOLVENTS ARE DANGEROUS MATERIALS. SOLVENTS CAN BE FLAMMABLE OR CAUSE DAMAGE TO THE ENVIRONMENT. REFER TO THE MATERIAL SAFETY DATA SHEETS (MSDS) AND THE LOCAL SAFETY PRECAUTIONS.

(1) Do a solvent wipe with MPK or acetone as given in SOPM 20-30-03.

(2) Abrade the surfaces with Scotch Brite, Type A, very fine pads or a high grade alumina sand paper (180-grit or finer). The metal surface will look clean when you finish this step of the process.

(3) Remove the unwanted abrasive particles from the surface. Use clean dry air or nitrogen.

(4) Do a solvent wipe with MPK or acetone as given in SOPM 20-30-03.

BOEING PROPRIETARY - Copyright © - Unpublished Work - See title page for details.

WARNING: DO NOT DO GRIT BLAST PROCEDURES WITH ALUMINUM OXIDE ON TITANIUM IN AREAS WHERE THE IGNITION OF FUMES IS POSSIBLE. SPARKS FROM THE GRIT BLAST PROCEDURE CAN CAUSE AN EXPLOSION.

D. Fully abrade the repair area again.

NOTE: After the completion of this abrasion step, apply the Boegel (AC130) solution as soon as possible, but not later than 24 hours.

(1) Use fresh aluminum oxide abrasive grit, 50 to 76 micron (No. 280 to No. 180 grit) to grit-blast a surface area that is larger than the area to be bonded.

(a) Use 30 to 60 psi oil–free compressed air with the alumina grit.

(b) A blaster angle of 45 +/-15 degrees to the surface at a distance of 4.0 to 6.0 inches gives the best results.

(c) Slightly overlap the blast area with each pass across the surface to be bonded, until you see a matte appearance that looks the same everywhere.

NOTE: This procedure is necessary to make the surface reactive for the Boegel (AC-130).

(d) Make sure that all of the repair area is fully abraded, including the edges.

(2) Remove all loose grit residue with a clean, dry, natural bristle brush or with clean, oil–free compressed air. Keep the surface clean until you apply the Boegel (AC-130) Solution.

NOTE: Do not use water or solvents to remove the grit.

E. Mix the components of kit as given in the manufacturer's instructions. Use a kit size that is the best for the area to be treated. Example: approximately 50 ml of the Boegel (AC-130) solution is satisfactory to treat 200 square inches (1300 square cm) of bond zone. Scale it up if necessary.

(1) 30 minutes after you mix the components, you can apply Boegel (AC130) to the surface to be treated.

NOTE: 30 minutes is the minimum time necessary for the components to react.

(2) Use the mixture as soon as possible after the 30 minutes of reaction time, but not more than 10 hours after the components are mixed.

WARNING: DO NOT PERMIT THE BOEGEL (AC-130) SOLUTION TO TOUCH YOUR FACE OR EYES. USE APPROVED PROTECTION PROCEDURES. IF THE SOLUTION TOUCHES THESE AREAS, IRRITATION TO THE EYES AND SKIN CAN OCCUR.

F. Apply the Boegel (AC-130) solution.

(1) Isolate the mechanical fasteners and all the other areas that are not damaged. Use aluminum foil tape or a combination of aluminum foil tape and polyethylene film (or the equivalent). This will prevent contamination.

BOEING PROPRIETARY - Copyright © - Unpublished Work - See title page for details.

(2) Make sure that the temperature of the Boegel and titanium part stays between 50° and 100°F (10° and 38°C) during the procedure.

(3) Apply the solution to the bond surface to be treated with a clean, natural (non-metallic) bristle brush or with a sprayer.

(4) Apply a sufficient quantity of solution to cause the solution to drain from the bond surface. Keep the bond surface fully and continuously wet with the solution for 2 minutes, minimum.

NOTE: The wetted surface must look like a water-break-free surface. If the solution film does not stay continuous, there is surface contamination and you must do the cleaning, abrasion and application steps again.

(5) After the Boegel solution has remained on the bond surface for 2 minutes (minimum), let the solution drain off the part and let the part dry. If the solution remains in areas that cannot drain, carefully remove the solution with a clean absorbent cloth (BMS 15-5 wipers or cheesecloth for example) that is moist with Boegel (AC-130). Do not rub or wipe the surface. Do not touch the surface with your bare skin or with gloves that have contamination.

NOTE: Absorbent Cloth materials must not contain dyes, solvents water, oil, grease, dust, metallic particles, alumina grit or other types of contamination.

G. Let the treated surfaces dry at room temperature for 60 minutes, minimum (but not more than 24 hours). You can use an oven, heat lamp, or forced air that is oil-free and is no hotter than 160°F (71°C) to dry the parts.

H. Examine all of the treated surface. The surface must look dry and not have dust, fingerprints or other contamination. Use filtered forced air to remove dust. Do not use water or solvents to clean the surface. Water and solvents will cause contamination to the treated surface. If there is contamination that cannot be removed with forced air, then clean, abrade, and do the Boegel steps again.

NOTE: It is possible that you will see stains on the prepared surface after the surface is dry. These stains are permitted.

I. Keep the bond surface(s) clean and dry if you cannot apply the adhesive primer immediately.

(1) Do not touch the surface(s) with your bare skin, waxed paper, or material that has a release agent or other contamination.

(2) If protection of the surface(s) is necessary, then put vacuum bag film or unwaxed paper (without ink or other contamination on it) on the bond surface(s).

J. Apply BMS 5-89, Type II (BR 6747-1) adhesive primer not later than 24 hours after you apply the Boegel (AC-130) solution. Refer to SRM 51-40-20. Clean the bond surface and do the Boegel (AC-130) procedure again if the bond surface has contamination.

BOEING PROPRIETARY - Copyright © - Unpublished Work - See title page for details.

10. Application of Adhesive

A. If you are bonding metal to metal, then refer to SRM 51-40-20 for the application of adhesive, vacuum bag and cure cycle data.

B. If you do a preimpregnated (prepreg) repair (or replacement) to class fiber reinforced plastic (GFRP) on the titanium, refer to SRM 51-40-19.

NOTE: Use BMS 5-101, Type II, Grade 10 instead of BMS 5-129 film adhesive when you apply the prepreg GFRP on titanium.

BOEING PROPRIETARY - Copyright © - Unpublished Work - See title page for details.

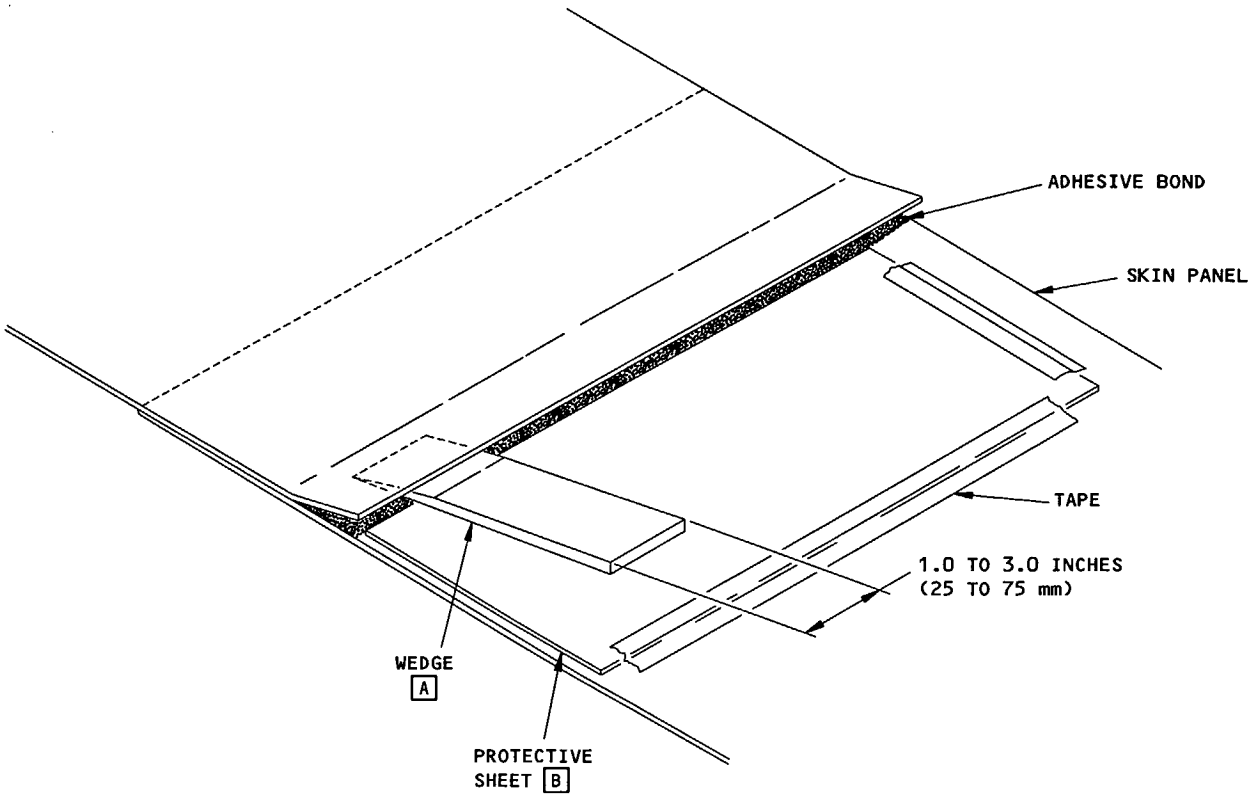

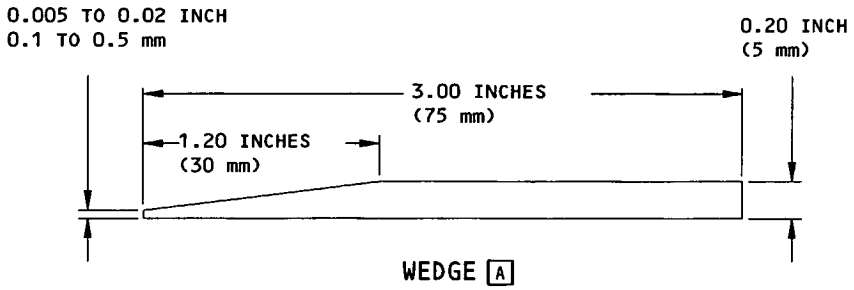

SEPARATION OF THE BONDED PARTS WITH WEDGES

DETAIL I

NOTES

A WOOD OR PLASTIC ARE EXAMPLE MATERIALS

B METAL OR PLASTIC ARE EXAMPLE MATERIALS

Damage Removal Procedures
Figure 1

BOEING PROPRIETARY - Copyright © - Unpublished Work - See title page for details.

SUPPORT OF STRUCTURE FOR REPAIRS

1. General

A. Support the airplane in jig position per 51-50-1 for making major repairs to fuselage, wing and empennage.

SUPPORT OF AIRPLANE IN JIG POSITION

1. Raise Airplane per 51-50-2.

2. Procedure Equipment per Fig. 1.

3. Level Airplane per 51-50-3.

4. Support Airplane per Fig. 2.

   A. After airplane is supported, check that the airplane attitude is per 51-50-3, Fig. 1.

   B. Periodically check that the airplane attitude is per 51-50-3, Fig. 1.

5. Alternative Support of the Fuselage in the Jig Position With a Window Support Assembly

   NOTE: The steps that follow can be used when removing the horizontal stabilizer or when the steps as given in SRM 51-50-3 can not be completed because of interference with fuselage cradles. When using this method, it is necessary to satisfy the fuselage leveling requirements in SRM 51-50-3. This method of support is not for use when repairing the fuselage skin panel between stringers 10 and 14.

   A. Remove the interior panel to gain access to the window panels. Refer to 52-50-00 of the Maintenance Manual.

   B. Remove the window as necessary. Refer to 56-00-00 of the Maintenance Manual.

   C. Place the window blocks and beams in the window frames as shown in Fig. 7, Details I, II, III, IV, and V.

   D. Install the fuselage support jigs as shown in Fig. 7, Details I, II, III, IV, and V until contact is made with the window beams.

6. Remove Engine Weight as Required to Accomplish Repairs.

   NOTE: The following procedure is used for engine weight removal if removal of the engine is not required.

   A. Remove engine side cowl panels per 71-11-11 of the Maintenance Manual.

   B. Install engine handling attach beams on engine.

   C. Assemble and attach horizontal and vertical support beams per Fig. 6.

   D. Position load cell, jack, and jack support per Fig. 6.

E. Jack to 5000 lbs (2.5 tons).

NOTE: Check the attitude periodically per 51-50-3, Fig. 1, to ensure that no distortion buildup has occurred in the airplane structure while being repaired in a supported position.

F. Accomplish necessary repairs.

G. Clear work area of unnecessary workstands, tools and equipment.

H. Lower jack and remove load cell, jack, and jack support.

I. Remove support beams.

J. Remove engine handling attach beams from engine.

K. Reinstall side cowl panels per 71-11-11 of the Maintenance Manual.

7. After Required Repairs are Completed Lower Airplane per 51-50-4.

ITEM	NO. REQ'D	IDENTIFICATION	SOURCE
HYDRAULIC JACK WING POINTS I AND II	2	MODEL B 4A CAPACITY - 25 TONS (USA) MIN HEIGHT - 60.78 OR 96 INCHES RAM STROKE - 44 INCHES MAX. SCREW EXTENSION - 16 INCHES	REGENT MFG. CO. DOWNEY, CALIF. OR EQUIVALENT
JACK PAD WING POINTS I AND II	2	PART NO. F71156	THE BOEING CO.
FUSELAGE SUPPORT JIGS AND CRADLES		SEE FIGURES 3 AND 4	FABRICATE
WING AND HORIZONTAL STABILIZER JIGS AND CRADLES	6 JIGS OR 3 CRADLES	SEE FIGURE 5	
HYDRAULIC JACK FUSELAGE POINT III	1	MODEL B4A CAPACITY 30 TONS (USA) MIN HEIGHT - 55, 73, 91, 109, 127, OR 145 INCHES RAM STROKE - 40 INCHES MAX. SCREW EXTENSION - 15 INCHES	REGENT MFG. CO. DOWNEY, CALIF. OR EQUIVALENT
HYDRAULIC JACK FUSELAGE POINT IV	1	MODEL B4A CAPACITY - 25 TONS (USA) MIN HEIGHT - 55, 73, 91, 109, 127, OR 145 INCHES RAM STROKE - 40 INCHES MAX. SCREW EXTENSION - 15 INCHES	REGENT MFG. CO. DOWNEY, CALIF. OR EQUIVALENT
JACK PAD FUSELAGE POINT III	1	PART NO. F80001	THE BOEING CO.
JACK PAD FUSELAGE POINT IV	1	PART NO. F80000	THE BOEING CO.
SCREW JACK OR HYDRAULIC JACK	2 PER FUSELAGE SUPPORT JIG 2 PER WING OR HORIZONTAL STABILIZER JIG	10 TON AUTOMOTIVE SEE FIGURES 3 AND 5	ANY SOURCE
JACK EQUIPMENT - ENGINE SUPPORT	1	PART NO. C51001-2	THE BOEING CO.
ATTACH BEAMS - ENGINE HANDLING	2	PART NO. F72988 OR F72714	THE BOEING CO.
SCREW JACK OR HYDRAULIC JACK - ENGINE SUPPORT	1	MODEL - 2 1/2 x 18 CAPACITY - 12 TONS (USA) MIN HEIGHT - 23 INCHES RAM STROKE - 14.25 INCHES MAX SCREW EXTENSION - 8.75 INCHES	SIMPLEX JACK DIVISION BROADVIEW, IL. OR EQUIVALENT

JACKING EQUIPMENT
TABLE I

Support Equipment for Jig Position
Figure 1 (Sheet 1 or 2)

ITEM	NO. REQ'D	IDENTIFICATION	SOURCE
MEASURING ASSEMBLY	1	SEE 51-60 FIGURE 10	FABRICATE
TRAMMELS	1	SEE 51-60 FIGURE 9	FABRICATE
PLUMB BOB	1	NO. 87	THE L.S. STARRETT CO. ATHOL MASS. *
PLUMB BOB LINE	1	24 LBS TEST TROLLING LINE	WESTERN MFG. CO. GLENDALE CALIF. *
FLEXIBLE MEASURING TAPE	1		ANY SOURCE
LEVEL	1	ENGINEER'S LEVEL	HENRY WILD SURVEYING INSTRUMENT SUPPLY COMPANY OF AMERICA BROOKLYN N.Y. OR KEUFFEL AND ESSER COMPANY NEW YORK N.Y.

* OR EQUIVALENT

AUXILIARY TOOLS
TABLE II

NOTE

[A] ALL HYDRAULIC JACKS MUST BE EQUIPPED WITH GAGES READING IN TONS (USA) OR POUNDS. IF GAGES READ IN P.S.I. A CONVERSION CHART MUST BE AVAILABLE TO CONVERT P.S.I. READINGS INTO TONS (USA) OR POUNDS.

Support Equipment for Jig Position
Figure 1 (Sheet 2)

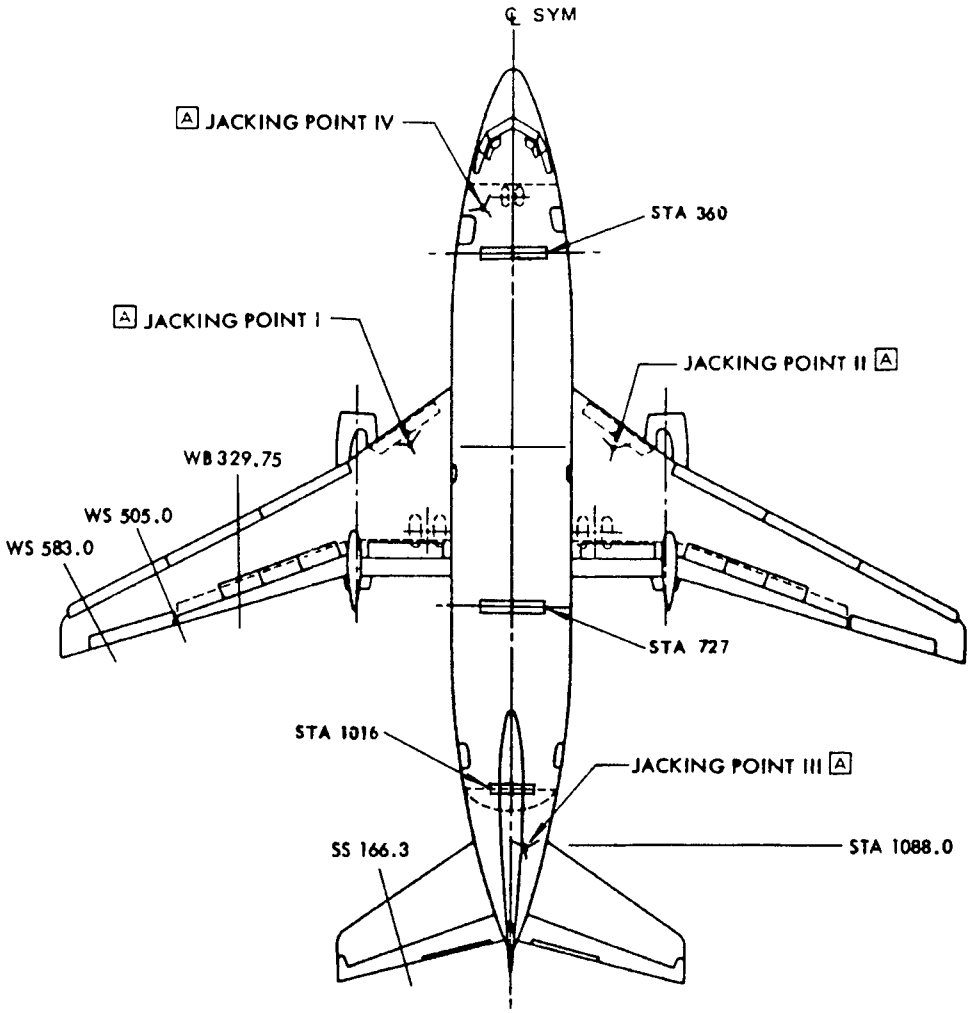

NOTES

- SEE FIGURES 3, 4 AND 7 FOR FUSELAGE SUPPORT JIGS AND CRADLES.
- SEE FIGURE 5 FOR WING AND HORIZONTAL STABILIZER SUPPORT JIGS AND CRADLES.

A SEE 51-60 FIGURE 2 FOR DETAILS OF JACKING, JACK LOADS AND MAXIMUM JACKING WEIGHT OF AIRPLANE

Jacking Points and Support of Airplane in Jig Position
Figure 2

LOC BODY STA	SUPPORT JIG DIMENSIONS		MAXIMUM SUPPORT JIG LOAD POUNDS
	HI	A	
360	60.00	90.00	15,000
727 [C]	60.00	100.00	15,000
1016	100.00	50.00	15,000

NOTE

- PROCURE CLEAR LUMBER FREE FROM KNOTS, SHAKES OR CHECKS WITH PHYSICAL PROPERTIES EQUIVALENT TO STRUCTURAL GRADE DOUGLAS-FIR, WEST COAST REGION.

[A] MINIMUM SIZE 8 x 10.

[B] ALL CRIBBING BELOW CROSS BEAMS CAN BE AVAILABLE TIMBER NOT LESS THAN 6 x 6.

[C] HEIGHT OF FRAMING AT STA. 727 TO BE DETERMINED BY THE NEED TO CLEAR WING-BODY FAIRINGS.

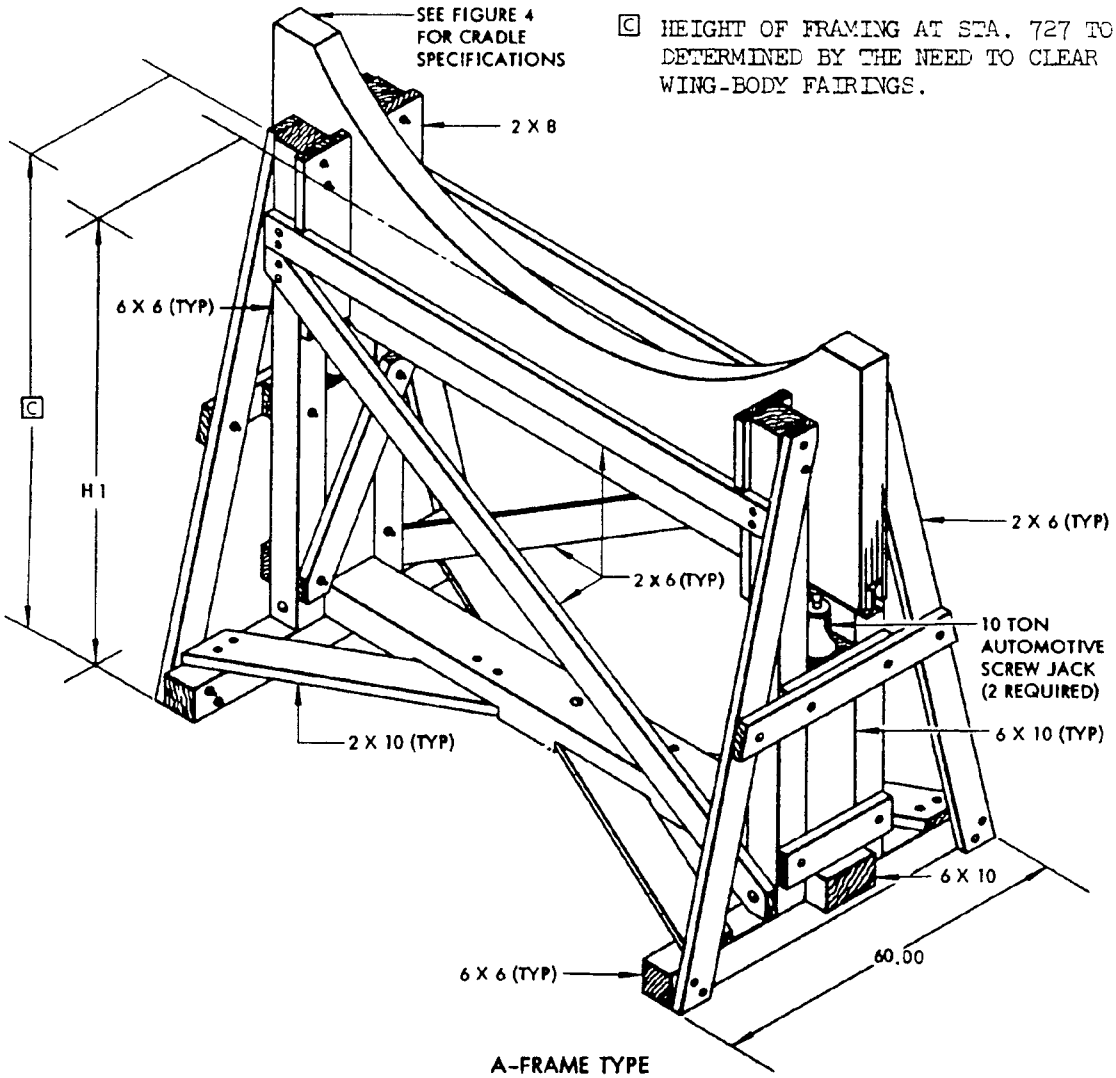

A-FRAME TYPE SUPPORT JIG

Support Jigs - Fuselage
Figure 3 (Sheet 1)

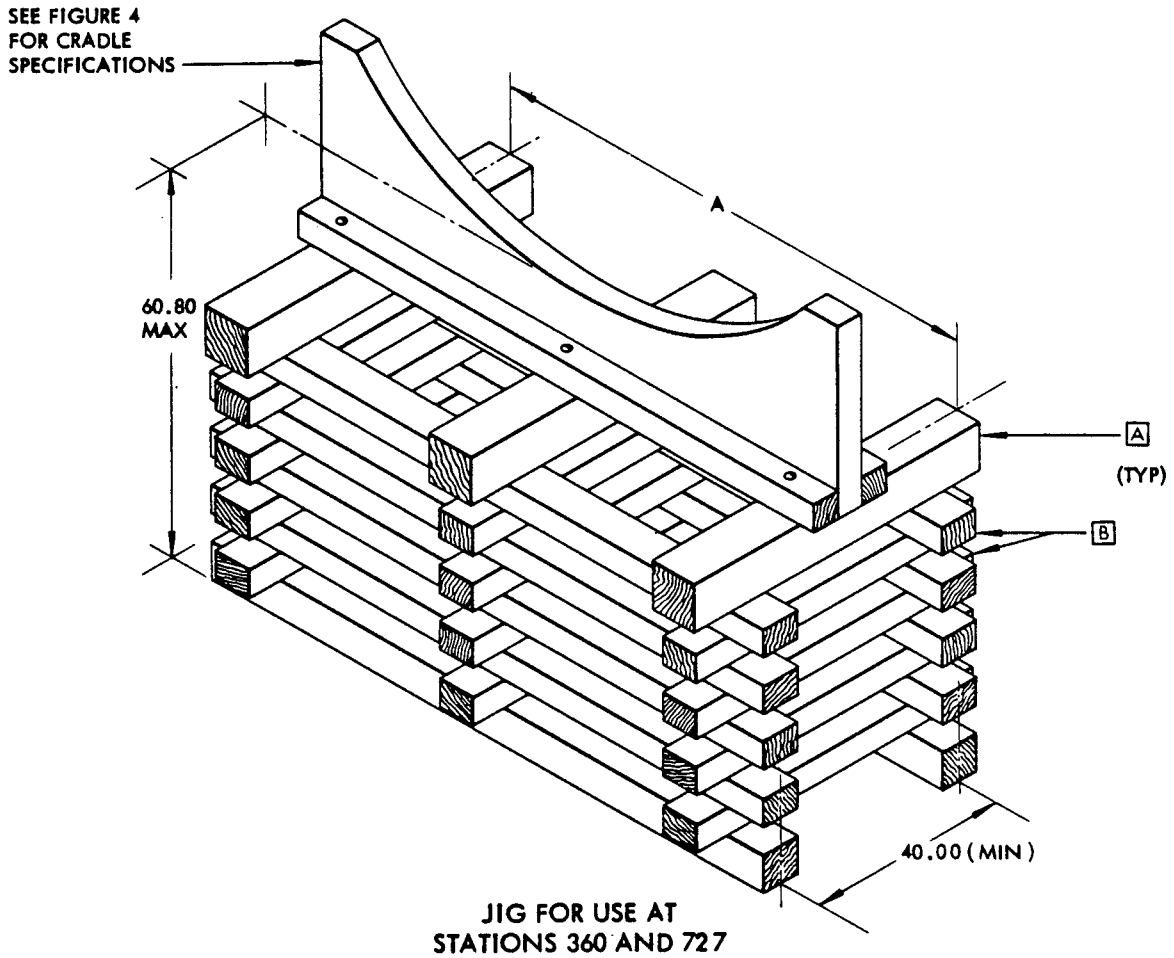

JIG FOR USE AT
STATIONS 360 AND 727

CRIBBING TYPE
SUPPORT JIG
(ALTERNATE)

X	Y		
	STA 360	STA 727	STA 1016
0	0	SEE CRADLE DETAIL	0
5	0.12		0.20
10	0.62		0.90
15	1.56		2.00
20	2.75		3.50
25	4.28		5.70
30	6.37		
35	9.00		
40	12.12		
45	15.80		
50	18.50		

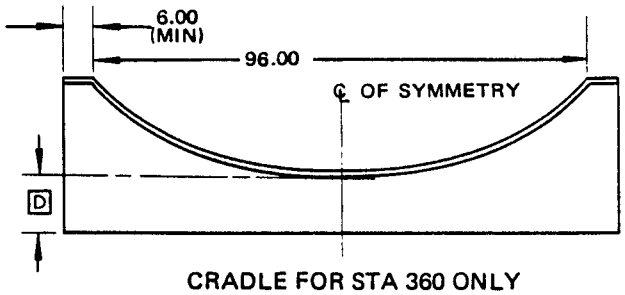

CRADLE FOR STA 360 ONLY

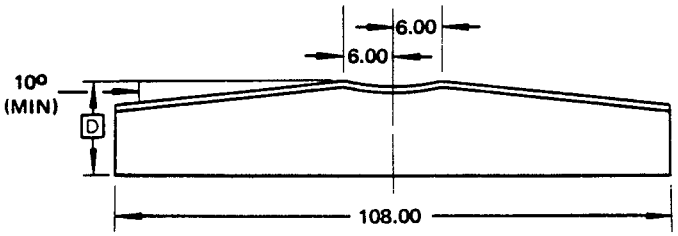

CRADLE FOR STA 727 ONLY

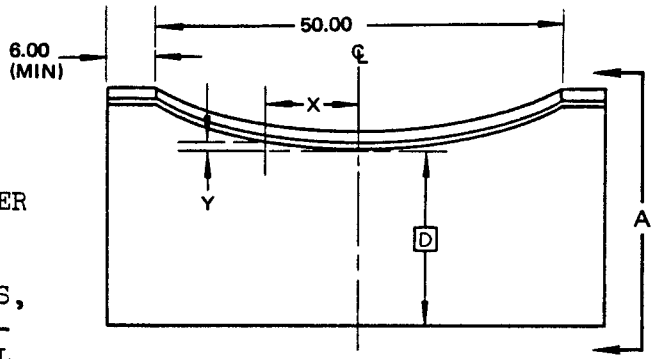

CRADLE FOR STA 1016 ONLY

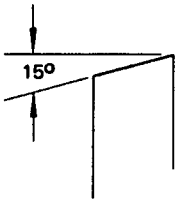

VIEW A

NOTE

A 5 PIECES OF 1.00 A.B. GRADE OR BETTER EXTERIOR FIR PLYWOOD.

B PROCURE CLEAR LUMBER FREE FROM KNOTS, SHAKES OR CHECKS WITH PHYSICAL CHARACTERISTICS EQUIVALENT TO STRUCTURAL GRADE DOUGLAS FIR, WEST COAST REGION.

C PAD WITH FELT OR RUBBER.

D SEE DETAIL I OR II FOR DIMENSIONS.

Support Cradles
Figure 4 (Sheet 1)

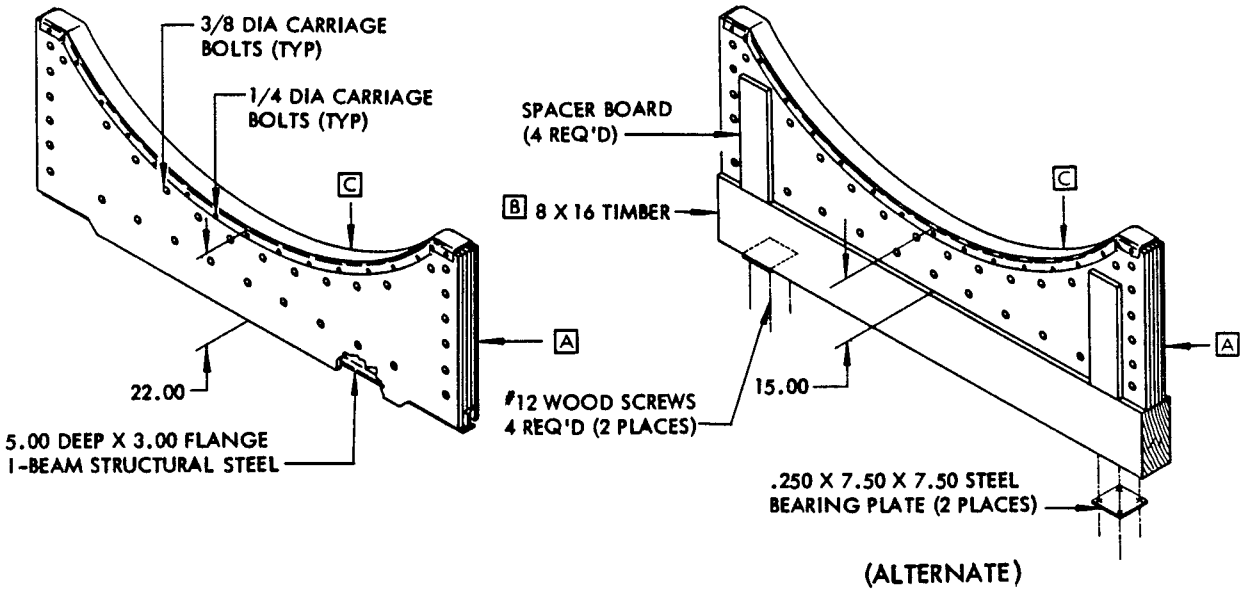

CRADLES FOR USE WITH
A-FRAME TYPE STRUCTURE

DETAIL I

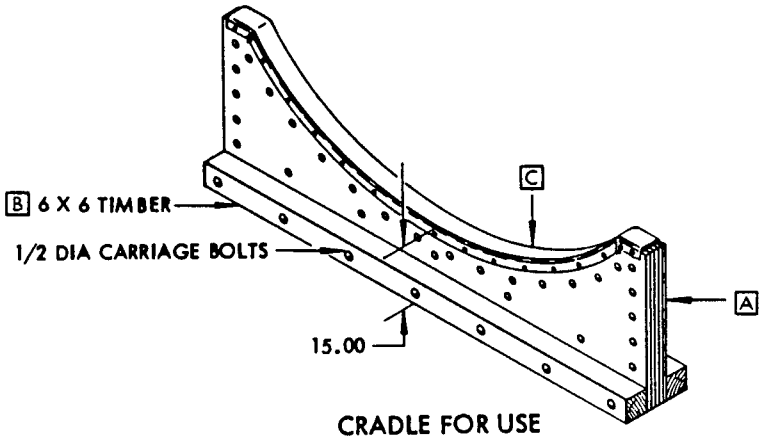

CRADLE FOR USE
WITH CRIBBING

DETAIL II

Support Cradles
Figure 4 (Sheet 2 of 2)

WBL	E	F
329.75	6°	3°
WING STA		
505	6°	3°
583	6°	3°
HORIZONTAL STAB. STA		
166.30	9°	1°

NOTE

- PROCURE CLEAR LUMBER FREE FROM KNOTS, SHAKES OR CRACKS WITH PHYSICAL PROPERTIES EQUIVALENT TO STRUCTURAL GRADE DOUGLAS-FIR, WEST COAST REGION,(USA).

A MINIMUM SIZE 8 x 12 OR 10 x 10 TIMBER.

B ALL CRIBBING BELOW CROSS BEAMS CAN BE ANY AVAILABLE TIMBER NOT LESS THAN 6 x 6.

C MAKE TO FIT SNUG AROUND 6 x 6 COLUMN.

D PAD WITH FELT OR RUBBER.

Support Jigs and Cradles - Wing and Horizontal Stabilizer
Figure 5 (Sheet 1 of 3)

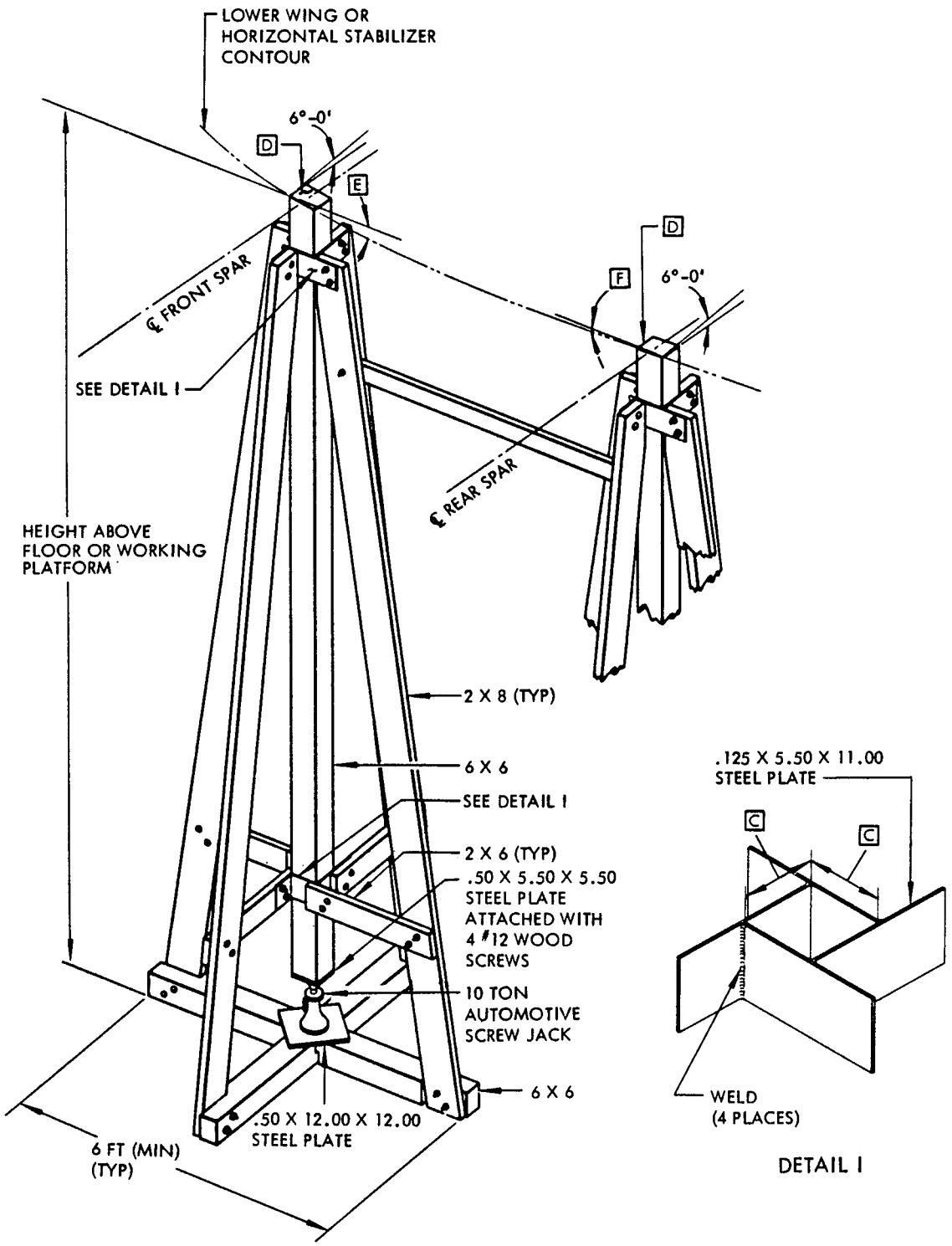

Support Jigs and Cradles - Wing and Horizontal Stabilizer
Figure 5 (Sheet 2 of 3)

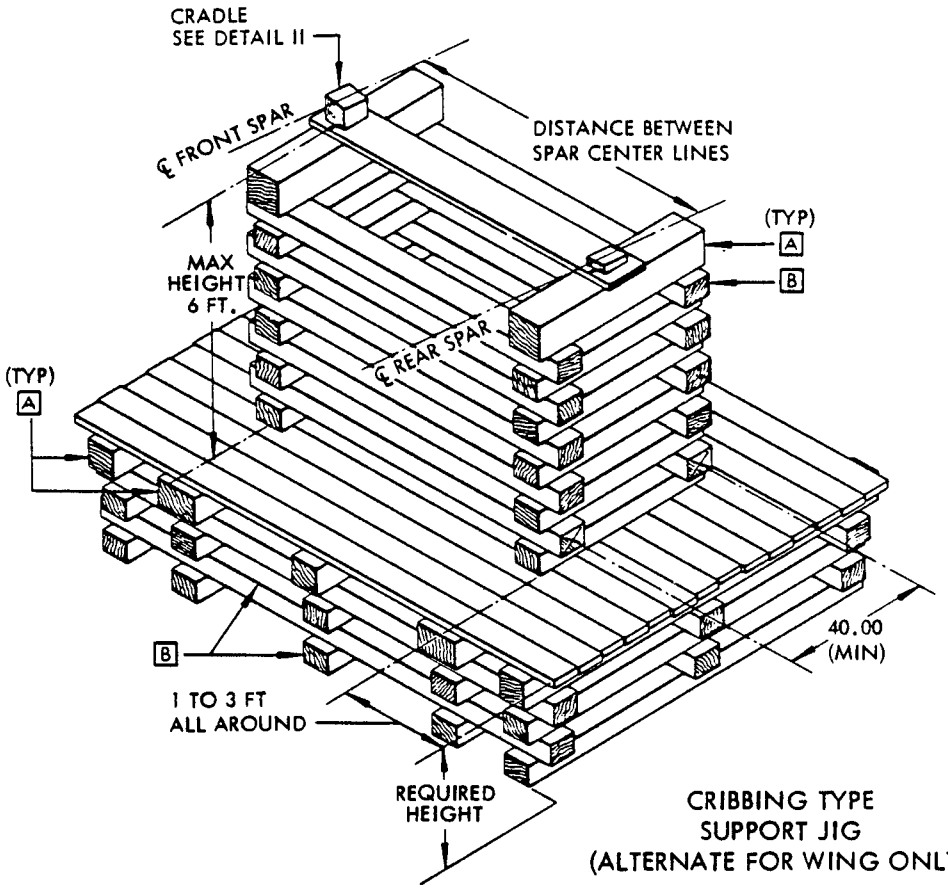

CRIBBING TYPE
SUPPORT JIG
(ALTERNATE FOR WING ONLY)

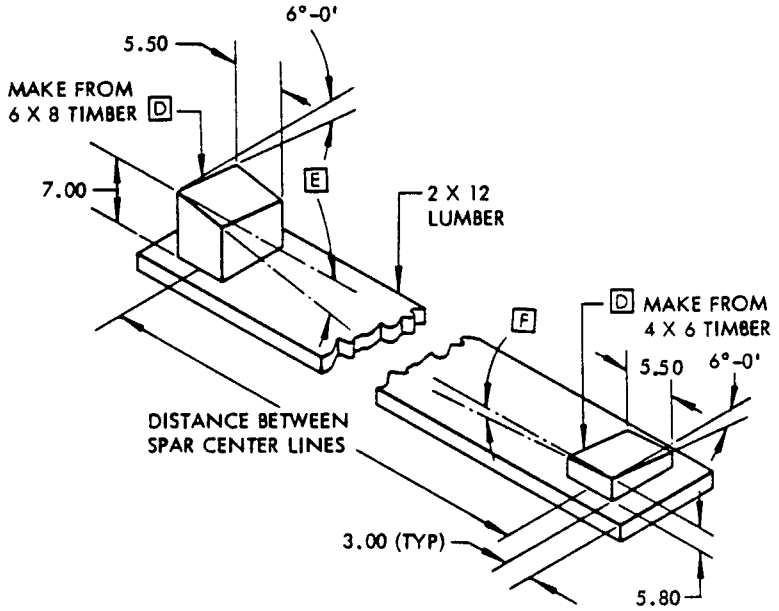

CRADLE
DETAIL II

Support Jigs and Cradles - Wing and Horizontal Stabilizer
Figure 5 (Sheet 3)

REF DRAWING
C51001

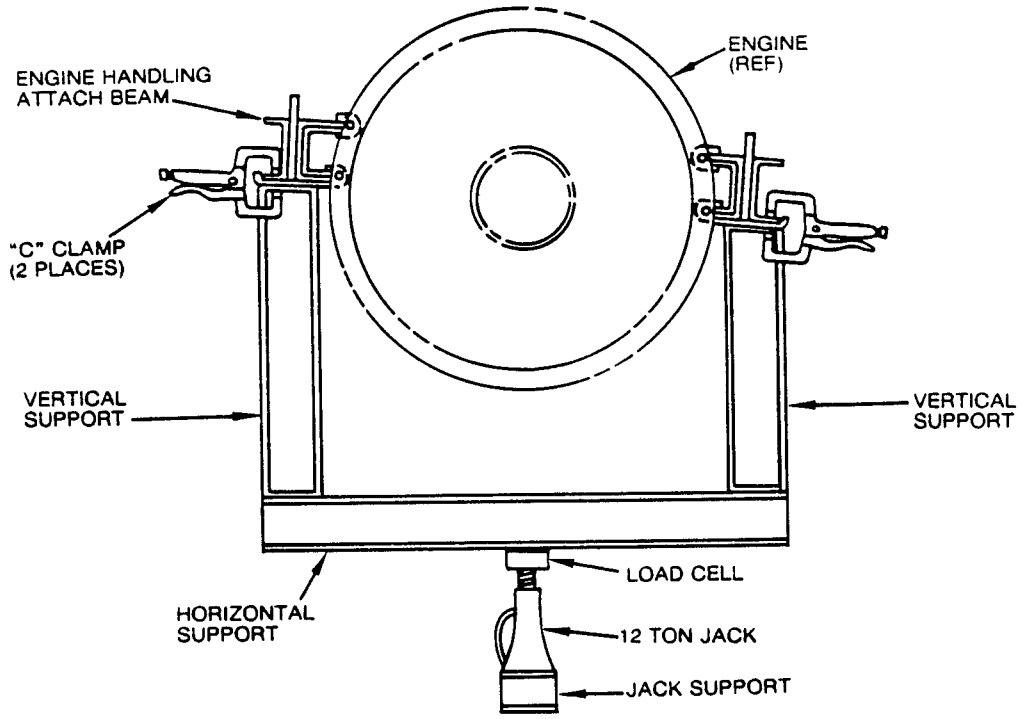

LOAD CELL POSITIONING
REAR VIEW, NO. 1 ENGINE
DETAIL I

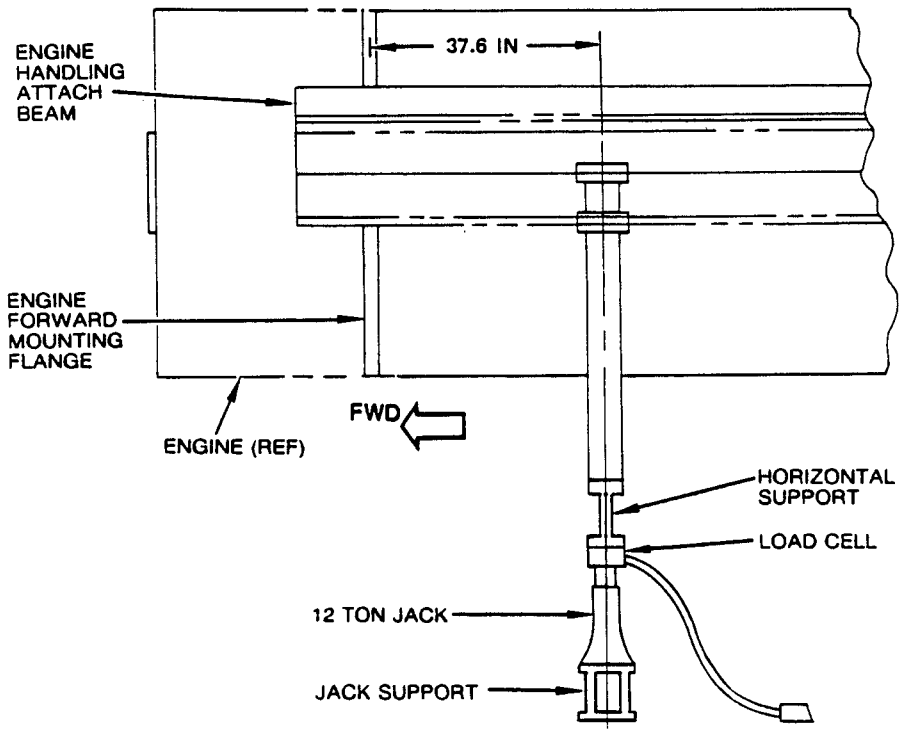

LOAD CELL POSITIONING
SIDE VIEW
DETAIL II

Jack Equipment - Engine Support
Figure 6

NOTES:

PROCURE CLEAR LUMBER FREE FROM KNOTS, SHAKES OR CHECKS WITH PHYSICAL PROPERTIES EQUIVALENT TO STRUCTURAL GRADE DOUGLAS FIR, WEST COAST REGION, USA

[A] A MAXIMUM WEIGHT OF 1500 POUNDS TO EACH WINDOW FRAME IS PERMITTED IN SECTIONS 43 AND 46.

[B] LOCATE SUPPORT BEAMS AS NECESSARY TO SATISFY FUSELAGE LEVELING REQUIREMENTS OF 51-50-3.

[C] MAKE FROM DIMENSIONS AS SHOWN ON DRAWING 69-72060

[D] MAKE FROM DIMENSIONS AND MATERIAL SHOWN ON DRAWING ME65-73700-1. REFER TO SHEET 3, DETAIL NUMBERS 312, 320, AND 322.

[E] MAKE SURE THE HARDWOOD FITS AGAINST THE FRAME TO PROVIDE EVENLY DISTRIBUTED LOADING. MAKE SURE THERE ARE NO GAPS GREATER THAN 0.01 INCH AT THE MATING SURFACE.

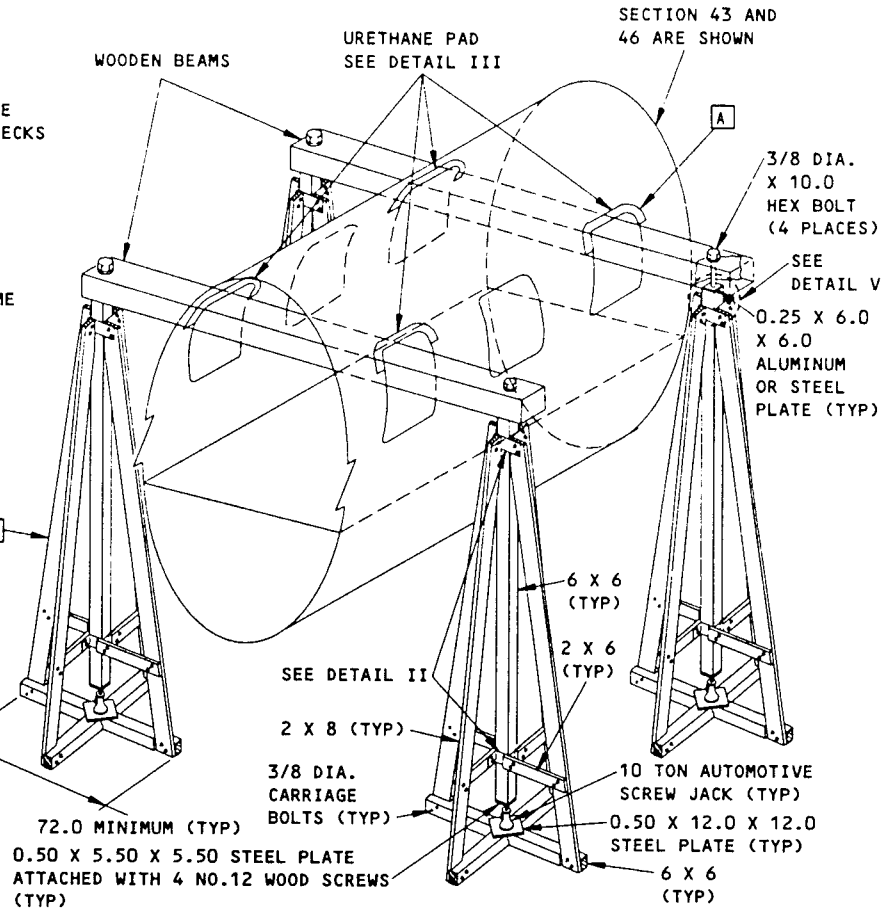

SUPPLEMENTARY FUSELAGE SUPPORTS
DETAIL I

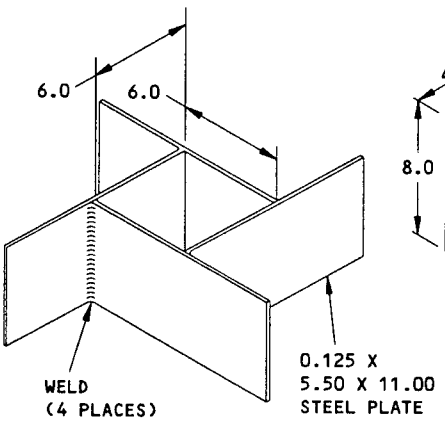

DETAIL II

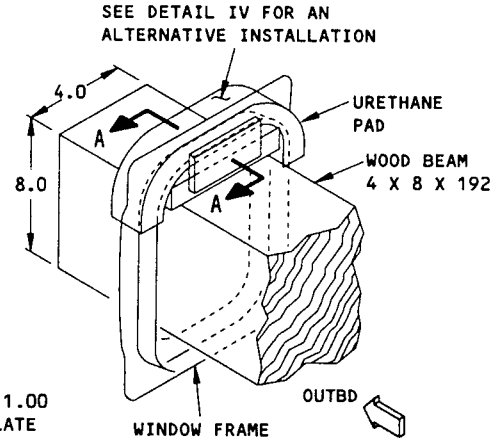

DETAIL III

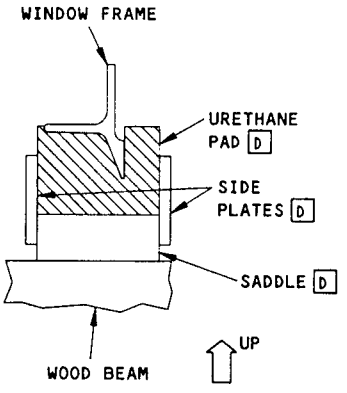

SECTION A-A

Alternative Fuselage Support Equipment
Figure 7 (Sheet 1)

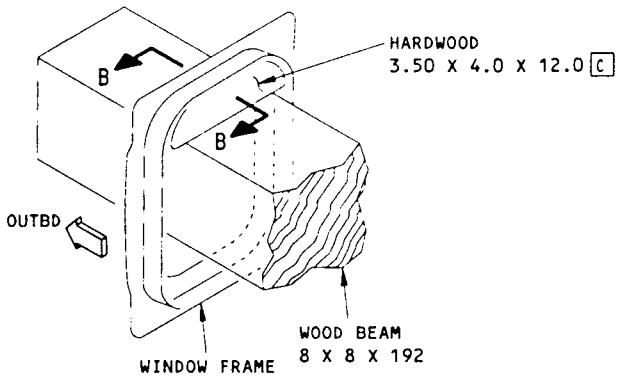

DETAIL IV

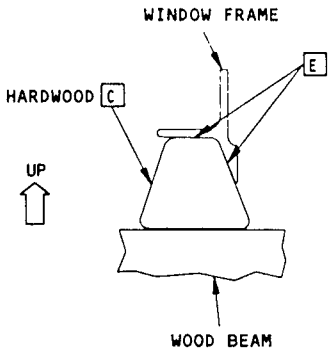

DETAIL IV
SECTION B-B

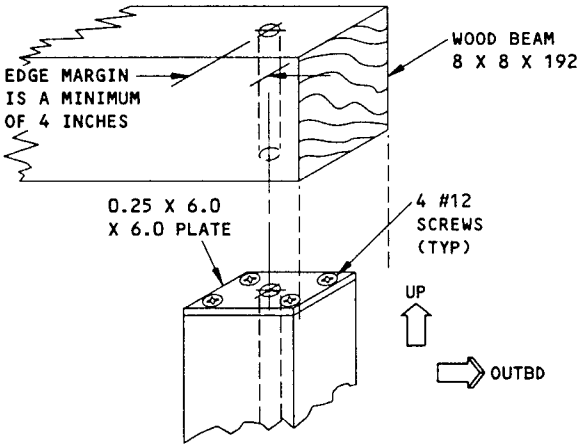

DETAIL V

Alternative Fuselage Support Equipment
Figure 7 (Sheet 2)

AIRPLANE RAISING

1. Procure Equipment.

   A. Procure equipment per 51-50-1, Fig. 1.

2. Prepare Airplane for Raising.

   WARNING: ENSURE THAT THE GENERAL REQUIREMENTS FOR ALIGNMENT CHECK, PRESCRIBED IN 51-60, PAR. 1, AND THE MAXIMUM JACKING WEIGHT SHOWN IN 51-60, FIG. 2 ARE COMPLIED WITH.

   A. Check the weight of the airplane and ensure that the conditions are suitable for jacking.

   B. Check that the landing gears are locked down and safety pins are in position.

      NOTE: Landing gear control handle in flight compartment nust be in OFF position. Refer to Maintenance Manual, Chapter 32.

   C. Install jack pads. Refer to 51-50-1, Fig. 1, for jack pad locations and part numbers.

      (1) Install jack pads at wing points I and II as well as fuselage points III and IV.

   D. Locate jacks. Refer to 51-50-1, Fig. 1, for jack specifications and locations.

      (1) Place jacks under wing points I and II as well as at fuselage points III and IV.

      (2) Extend rams and extension screws snug against jack pads.

      (3) Lower ram lock nuts within approximately 1.00 inch from the jack head.

   E. Remove landing gear wheel chocks.

   F. Release parking brakes.

   G. Hang plumb bob from bracket (directly above leveling scale) installed on pressure deck of main wheel well at station 685 and R.B.L. 7.33. Refer to 51-60. Fig. 3.

H. Position one man at each jack to:

(1) Operate the jack.

(2) Watch the pressure gage.

NOTE: Chalk or crayon mark jack gage dial glass at the maximum allowable load for each jack. Refer to 51-50-1, Fig. 1, for maximum allowable load at wing and fuselage jacking points.

(3) Ascertain that ram lock nut is approximately 1.00 inch from jack head throughout the raising operation.

J. Position one man at leveling scale in main landing gear right hand wheel well to ascertain that airplane is raised in its level attitude so that plumb bob point is logitudinally and transversely within 0.20 of the zero mark on the levelling scale. Refer to 51-60, Fig. 3.

3. Raise Airplane.

WARNING: DO NOT RAISE AIRPLANE IN AN EXPOSED AREA SUBJECT TO WIND VELOCITIES ABOVE 35 MPH.

A. Raise airplane until the landing gear wheels with max oleo extension clear the floor by 2.00 inches by simultaneously lifting at wing points I and II an fuselage point III.

CAUTION: DO NOT EXCEED ALLOWABLE JACK LOADS AS MARKED ON THE PRESSURE GAGE DIAL GLASS. REFER TO 51-50-1, FIG. 1, TO ASCERTAIN THAT GAGES ARE PROPERLY MARKED.

DO NOT APPLY ANY LOAD ON JACK AT FUSELAGE POINT IV. FOLLOW MOVEMENT OF THIS POINT BY KEEPING RAM SNUG AGAINST PAD. JACK AT THIS POINT IS USED ONLY TO LONGITUDINALLY STABILIZE THE AIRPLANE.

DO NOT RAISE FUSELAGE POINT III AHEAD OF WING POINTS I AND II. THIS OPERATION WILL OVERLOAD JACKS AT FUSELAGE POINTS III AND IV.

NOTE: The use of the hand pump is preferred to the pneumatically operated pump to achieve precise leveling.

(1) Ascertain that airplane is being raised in its level attitude by observing that plumb bob point against leveling scale is within 0.20 of zero mark in both longitudinal as well as transverse direction. Refer to 51-60, Fig. 3.

(2) Ascertain that during raising operations ram lock nuts are approximately 1.00 inch from jack head.

(3) Allow nose landing gear oleo to extend to its fully extended position.

B. Lock all jacks if airplane is to remian supported on jacking points.

(1) Lower and hand-tighten ram lock nuts against jack head on all jacks.

(2) Wrench-tighten ram lock nut set screws on all jacks.

AIRPLANE LEVELING

1. Plumb Bob Level the Airplane

   A. Procure equipment as necessary from list in 51-50-1.

   B. Close release valve on all jacks.

   C. Loosen ram lock set screws on all jacks.

   D. Apply just enough hydraulic pressure to relieve load on ram lock nut.

   E. Raise ram lock nuts approximately 1.00 inch from jack head on all jacks.

   F. Level airplane by using plumb bob and leveling scale mounted in main landing gear right-hand wheel well (Ref 51-60, Fig. 3).

      NOTE: The use of the hand pump is preferred to the pneumatically operated pump to achieve precise leveling.

   G. Level airplane transversely by operating wing jacks at points I and II.

      NOTE: Follow upward motion of body point IV by keeping ram snug against pad if leveling operation causes airplane to undergo a left-hand roll.

      Follow downward motion of body point IV by keeping ram snug against pad if leveling operation causes airplane to undergo a right-hand roll.

   H. Level airplane longitudinally by operating body jacks at points III and IV.

      NOTE: Follow upward motion of body point IV by keeping ram snug against pad if leveling operation causes airplane nose to go up. Follow downward motion of body point IV by keeping ram snug against pad if leveling operation causes airplane nose to go down.

   I. Consider airplane leveled in a nonjig position if plumb bob point against the leveling scale is within 0.10 of the zero mark (Ref 51-60, Fig. 3).

      NOTE: Ascertain that landing gear wheels do not touch floor during leveling operation.

      Ascertain that during leveling operations ram lock nuts are approximately 1.00 inch from jack head.

2. Level Airplane for Jig Position

A. Procure equipment as necessary from list in 51-50-1.

B. Preliminary leveling step.

(1) Level airplane by using plumb bob and leveling scale in right main landing gear wheel well as per par. 1.

C. Final leveling step.

(1) Level airplane by using engineers level or equivalent.

(2) Set up level at airplane leveling and elevation reading position as shown in 51-60, Fig. 4.

NOTE: Landing gear control handle in control cabin must be in DOWN position (Ref Section 32-3-0, 737 Maintenance Manual).

(3) Transversely level airplane as follows (Ref 51-60, Fig. 4, for point locations.):

NOTE: Use ladder or aerostand as required.

(a) Place measuring tape against left wing point KK.

(b) Sight and record reading.

(c) Place measuring tape against right wing point KK.

(d) Sight and record reading.

(e) Level airplane transversely per par. 1.G. until right and left readings are within 0.020. Calculate the average of these two readings and record.

(4) Longitudinally level airplane as follows:

NOTE: Use ladder or aerostand as required.

(a) Place measuring assembly as shown on 51-60, Fig. 4, Detail II, on point BB, left side of fuselage.

(b) Sight and record readings. Add 53.12 to the average reading at point KK determined in step (3)(e).

(c) Level airplane longitudinally per par. 1.H. until reading at point BB is within 0.020 of reading for point KK determined in step (4)(b).

NOTE: Ascertain that landing gear wheels do not touch floor during leveling operations.

Ascertain that during leveling operations ram lock nuts are approximately 1.00 inch from jack head.

Do not disturb the engineering level set up.

3. Lock All Jacks

A. Lower and hand-tighten ram locknuts against jack head on all jacks.

B. Wrench-tighten ram locknut set screws on all jacks.

4. Bleed All Jacks

WARNING: ON SOME HYDRAULIC JACK MODELS IN POOR CONDITION THE RAM LOCK NUT MAY TURN ALLOWING THE RAM TO MOVE DOWNWARD AFTER RELEASE VALVE IS OPENED EVEN THOUGH LOCK NUT SET SCREW IS WRENCH TIGHTENED. OBSERVE CAREFULLY FOR SUCH MALFUNCTIONING AND IF DISCOVERED, IMMEDIATELY CLOSE RELEASE VALVE. CONTINUE LEVELING AIRPLANE. IF DUE TO LEAKY RELEASE VALVE, RAM CONTINUES TO MOVE DOWNWARD, LOWER AIRPLANE PER 51-50-4 AND REPLACE FAULTY JACK.

A. Gradually open release valve not more than 1-1/2 turns.

B. Check that the pressure gage reads zero.

5. Check Attitude of Airplane

A. Take final readings at the left and right wing points KK. Calculate the average of these two readings.

B. Take final readings at point BB. Add 53.12 to the average reading at point KK and compare with reading taken at BB.

C. The airplane is leveled if final readings taken at steps A and B are within 0.020 inches.

6. Relevel Airplane as Follows if After Bleeding Jacks the Airplane Attitude is not Within 0.020 Inches.

A. Proceed as follows if left (or right) wing point KK is low.

(1) Operate jack at body point IV.

(a) Loosen ram locknut set screw.

(b) Slowly raise ram just enough to relieve load on locknut so that it is free to turn.

(c) Turn ram locknut to raise it about 0.50.

(2) Operate jack nearest left (or right) low point KK.

(a) Loosen ram locknut set screw.

(b) Slowly raise ram the exact distance that the point KK is low.

NOTE: Use feeler gages between locknut and jack head.

Ascertain that locknut is not turned when loosening set screw.

(c) Remove feeler gages.

(d) Hand-tighten ram locknut against jack head.

(e) Wrench-tighten ram locknut set screw.

NOTE: Ascertain that locknut is not turned when tightening set screw.

(f) Bleed jack.

NOTE: Before raising low point KK ascertain in which direction airplane will tend to roll. Follow upward motion of body point IV by keeping ram snug against pad if leveling operation causes airplane to undergo a left roll. Follow downward motion of fuselage point IV by keeping ram snug against pad if pressure gage indicates that airplane is tending to undergo a right roll.

(g) Check that the pressure gage reads zero.

(3) Take readings at left and right points KK and record. Calculate the average of left and right point KK readings.

(4) Repeat steps (2) and (3) until the low point KK is within 0.02 inches of opposite point KK.

(5) Take a reading at point BB. Add 53.12 to the average reading taken at point KK and compare with reading taken at BB.

(6) The airplane is leveled if readings determined at steps (3) and (5) are within 0.02 inches.

(7) Operate jack at fuselage point IV.

(a) Lower and hand-tighten ram locknut against jack head.

(b) Wrench-tighten locknut set screw.

(c) Bleed jack.

(d) Check that the pressure gage reads zero.

B. Proceed as follows if left (or right) point KK is high.

(1) Operate jack at fuselage point IV.

(a) Loosen ram locknut set screw.

(b) Slowly raise ram just enough to relieve load on locknut so that it is free to turn.

(c) Turn ram locknut to raise it about 0.50 inches from jack head.

(2) Operate jack next to high left (or right) point KK.

(a) Loosen ram locknut set screw.

(b) Slowly raise ram just enough to relieve load on locknut so that it is free to turn.

NOTE: Do not turn locknut at this step.

(c) Hand-turn ram locknut to raise it by the exact amount that point KK is high.

NOTE: Use feeler gages between locknut and jack head.

(d) Remove feeler gages.

(e) Wrench-tighten ram locknut set screw.

NOTE: Ascertain that locknut is not turned when tightening set screw.

(f) Bleed jack.

NOTE: Before bleeding jack ascertain in which direction airplane will tend to roll. Follow upward motion of fuselate point IV by keeping ram snug against pad if leveling operation causes airplane to undergo a left roll. Follow downward motion of fuselage point IV by keeping ram snug against pad if pressure gage at this jack indicates that airplane is tending to undergo a right roll.

(g) Check that the pressure gages read zero.

(3) Take readings at left and right points KK. Calculate the average of left and right point KK readings.

(4) Repeat steps (2) and (3) until high point KK is within 0.02 of opposite point KK.

(5) Take a reading at point BB. Add 53.12 to the average reading taken at point KK and compare with reading taken at BB.

(6) The airplane is leveled if readings determined at steps (3) and (5) are within 0.02 inches.

(7) Operate jack at fuselage point IV.

(a) Lower and hand-tighten ram locknut against jack head.

(b) Wrench-tighten locknut set screw.

(c) Bleed jack.

(d) Check that the pressure gage reads zero.

C. Proceed as follows if leveling point BB is low.

(1) Record distance in inches that the leveling point BB is low.

(a) Multiply this distance by 0.64.

(2) Operate jack at body point IV.

(a) Loosen ram locknut set screw.

(b) Slowly raise ram just enough to relieve load on locknut so that it is free to turn.

NOTE: Do not turn ram locknut at this step.

(c) Turn ram locknut to raise about 0.50 inch.

NOTE: Use feeler gages between locknut and jack head.

(3) Operate jack at fuselage point III.

(a) Loosen ram locknut set screw.

(b) Slowly raise ram just enough to relieve load on locknut so that it is free to turn.

NOTE: Do not turn ram locknut at this step.

(c) Turn ram locknut to raise it by the distance determined at step (1)(a).

NOTE: Use feeler gages between locknut and jack head.

(d) Wrench-tighten ram locknut set screw.

NOTE: Ascertain that locknut is not turned when tightening set screw.

(e) Bleed jack.

(f) Check that the pressure gage reads zero.

(4) Take readings at points BB and KK (left and right side). Add 53.12 to the average reading taken at KK and compare with the reading taken at BB.

(5) Repeat steps (1), (3), and (4) until point BB is within 0.02 of average reading of wing points KK plus 53.12 inches.

(6) Recheck left and right wing point KK readings and record.

(7) Airplane is leveled if conditions step (5) are met.

(8) Operate jack at fuselage point IV.

(a) Slowly raise ram snug against jack pad.

(b) Lower and hand-tighten ram locknut against jack head.

(c) Bleed jack.

(d) Check that the pressure gage reads zero.

D. Proceed as follows if point BB is high.

(1) Record distance in inches that point BB is high.

(a) Multiply this distance by 0.64.

(2) Operate jack at fuselage point IV.

(a) Loosen ram locknut set screw.

(b) Slowly raise ram just enough to relieve load on locknut so that it is free to turn.

(c) Turn locknut to raise it about 0.50 inch.

(d) Lower ram by about 0.25 inch or twice the distance that point BB is high, whichever is greater.

(3) Operate jack at fuselage point III.

(a) Loosen ram locknut set screw.

(b) Slowly raise ram just enough to relieve load on locknut so that it is free to turn.

NOTE: Do not turn locknut at this step.

(c) Slowly raise ram through distance determined at step (1)(a).

NOTE: Use feeler gages between locknut and jack head.

(d) Remove feeler gages.

(e) Lower and hand-tighten ram locknut against jack head.

(f) Wrench-tighten ram locknut set screw.

NOTE: Ascertain that locknut is not turned while tightening set screw.

(g) Bleed jack.

(h) Check that the pressure gage reads zero.

(4) Take readings at points BB and KK (left and right side).

(5) Repeat steps (1), (3), and (4) until point BB is within 0.02 inch of average reading of wing points KK plus 53.12 inches.

(6) Recheck left and right wing point KK readings and record.

(7) The airplane is level if conditions at step (5) are met.

(8) Operate jack at fuselage point IV.

(a) Slowly raise ram snug against jack pad.

(b) Lower and hand-tighten ram locknut against jack head.

(c) Wrench-tighten locknut set screw.

(d) Bleed jack.

(e) Check that the pressure gage reads zero.

7. Calculate Eye-Piece Elevation of the Engineers Level

   A. Use calculated average of the final readings at wing points KK.

   B. Subtract this average reading from 179.38 to obtain the eye-piece elevation reading. The resulting figure is the water line value of the eye-piece or height of the instrument.

8. Trim Stabilizer

   A. Refer to 51-60, Fig. 12.

   B. Set trammels so that distance between its points is 41.57 ± 0.03 (Ref 51-60, Fig. 9).

   C. Trim stabilizer to obtain 0 degrees AIRPLANE TRIM AT ZERO position by using power controls in control cabin (Ref 737 Maintenance Manual, 27-40-0).

   D. Check stabilizer trim by means of trammels. Dimension between center lines of upper and lower gimbals must be 41.57 ± 0.03 (Ref 51-60, Fig. 12).

   E. If trammel check indicates improper trim setting proceed as follows:

      (1) De-energize stabilizer trim control system by throwing trim cutout switch in direction indicated. The switch is located next to the right stabilizer trim control wheel in the control cabin (Ref 737 Maintenance Manual).

      (2) Manually adjust stabilizer trim by rotating trim wheel until the distance between upper and lower gimbal center lines is within 41.57 ± 0.10.

         NOTE: Entire stabilizer trimming operation may be accomplished manually per step E.(2) when no power is available.

9. Support the Airplane (Ref 51-50-1, Fig. 1)

   A. Place fuselage support jigs under fuselage at stations 360.2, 727, and 1016 (Ref 51-50-1, Fig. 4). If it is not possible to use a fuselage support jig, an alternative method using window support assemblies is available. Refer to 51-50-1.

      (1) Raise 10-ton automotive jacks evenly to make support jig contact fuselage at stations indicated. Do not take loads off hydraulic jacks.

   B. Place wing support jigs (three on each side) under wing buttock 329.75 and wing stations 505 and 583 at front and rear spars respectively.

   C. Place support jigs under horizontal stabilizer at stabilizer station 166.3 at front and rear spar.

10. Level the Wings

A. Determine elevation scale readings with the engineer's level located at airplane leveling and elevation reading position as shown on 51-60, Fig. 4.

B. Add the eye-piece elevation as calculated in par. 7 to all elevation scale readings. The results are the elevations of the various points in terms of waterline values.

C. Gradually raise jacks on wing support jigs until the following conditions are met when elevation readings are taken at wing points K, L, LL, M, MM, N and NN. See Fig. 1 for alignment point elevations.

(1) Average reading at KK minus 1.92 equals required elevation at K ±0.06.

(2) Average reading at KK plus 17.81 equals required elevation at L ±0.06.

(3) Average reading at KK plus 13.33 equals required elevation at LL ±0.06.

(4) Average reading at KK plus 30.61 equals required elevation at M ±0.06.

(5) Average reading at KK plus 27.76 equals required elevation at MM ±0.06.

(6) Average reading at KK plus 39.82 equals required elevation at N ±0.06.

(7) Average reading at KK plus 38.30 equals required elevation at NN ±0.06.

NOTE: Refer to 51-60, Fig. 13, for location of leveling points.

11. Level the Horizontal Stabilizer

A. Determine elevation scale readings with the engineers level located at airplane leveling and elevation reading position as shown on 51-60, Fig. 4 and 12. Refer to 51-60, Fig. 10, for illustration of measuring assembly.

B. Add eye-piece elevation as calculated in par. 7 to all elevation scale readings. The results are the elevations of the various points in terms of waterline values.

C. Gradually raise jacks on support jigs until the following conditions are met when elevation readings are taken at stabilizer points Q, QQ, and R. See Fig. 1 for alignment point elevations.

(1) Average reading at KK plus 95.58 equals required elevation at Q ±0.06.

(2) Average reading at KK plus 93.31 equals required elevation at QQ ±0.06.

(3) Average reading at KK plus 116.21 equals required elevation at R ±0.06.

NOTE: Refer to 51-60, Fig. 13, for location of leveling points.

POINT [A]	ELEVATION (WATER LINE)
BB	232.50
B	158.36
D	148.52
H	231.00
HH	231.00
K	177.46
KK	179.38
L	197.19
LL	192.71
M	209.99
MM	207.14
N	219.20
NN	217.68
Q	274.96
QQ [B]	272.69
R	295.59

NOTE

[A] SEE 51-60 FIGURE 13 FOR LOCATION OF ALIGNMENT POINTS.

[B] TRIM HORIZONTAL STABILIZER PER 51-50-3 PARAGRAPH 8.

Alignment Points for Airplane in Jig Position
Figure 1

AIRPLANE LOWERING

1. Lower Airplane

   A. Remove aerostands, ladders and any other equipment which may interfere with airplane structure during lowering operation.

   B. Check that all landing gear downlocks are in place.

   C. Set parking brakes.

   D. Place wheel chocks under all landing gear wheels.

   E. Loosen ram lock nut set screws on all jacks.

   F. Shut off release valves on all jacks.

   G. Position one man at each jack.

   H. Position one man in main landing gear right-hand wheel well next to plumb bob leveling scale in order to ensure that airplane is lowered in its level attitude.

   J. Slowly raise rams on all jacks just enough to relieve load on ram lock nuts so that they are free to turn.

   K. Turn ram lock nuts on all jacks to raise them approximately 1.00.

   L. Remove all support cradles and jigs.

   M. Simultaneously lower all jacks by gradually opening release valves not more than 1-1/2 turns.

      CAUTION: DO NOT ALLOW WING POINTS I AND II AND FUSELAGE POINT IV TO GO DOWN AHEAD OF FUSELAGE POINT III. SUCH AN OPERATION WILL PERMIT NOSE LANDING GEAR WHEEL TO TOUCH THE FLOOR AND OVERLOAD JACK AT FUSELAGE POINT III.

      DO NOT ALLOW RAMS AT WING POINTS I AND II TO GO DOWN AHEAD OF FUSELAGE JACKS III AND IV. SUCH AN OPERATION WILL OVERLOAD JACKS AT FUSELAGE POINTS III AND IV.

      IF JACK "HANGS UP" REFUSING TO GO DOWN WHEN PRESSURE IS RELIEVED, SLIGHTLY RAISE AND LOWER THE JACK RAM UNTIL IT IS FREE TO MOVE DOWNWARD. SHORE THE AIRPLANE WITHIN THE AREA OF FAULTY JACK USING SUPPORTS PER 51-50-1. REMOVE AND REPLACE FAULTY JACK IF "HANG UP" CONDITION CANNOT BE CORRECTED. ASCERTAIN THAT DURING LOWERING OPERATIONS RAM LOCK NUTS ARE APPROXIMATELY 1.00 FROM JACK HEAD.

   N. Remove plumb bob located in main landing gear wheel well.

   O. Remove jacks and jack pads.

ALIGNMENT CHECK PROCEDURES

1. General

   A. An alignment check can be performed on an airplane to aid in determining if structural deformation has occurred. Items that may cause structural deformations are:

      (1) When the airplane has been subjected to severe structural stresses due to a hard landing.

      (2) When the airplane has experienced severe flight conditions due to unusual weather or atmospheric conditions.

      (3) When the airplane has been subjected to severe flight maneuvers.

      (4) When the airplane has been subjected to sudden depressurization.

      (5) When the pilot reports that the airplane has unusual flight characteristics.

      (6) After a major structural repair.

      (7) Other conditions as determined by operator's requirements.

   B. For a detailed evaluation of alignment checks refer to notes on Fig. 17.

2. General Requirements

   A. Place airplane in an enclosed area on a hard and fairly level surface in order to obtain reliable alignment data.

      (1) Shut off all air circulating equipment, if any.

      (2) Close all outside doors during windy weather.

   B. Conform with the following additional requirements if no enclosed area is available:

      (1) Head airplane into the wind.

      (2) Do not raise the airplane when wind velocities exceed 35 mph.

(3) Perform alignment check:

(a) When wind velocity is less than 10 mph.

(b) During the night, or

(c) In shade covering entire airplane during the day in order to avoid exposure to direct sun heat, or

(d) In any hard and level area during cloudy days.

C. Defuel airplane per Chapter 12, Maintenance Manual.

D. Do not perform alignment check for at least an hour after airplane has been exposed to direct sun heat or after any engines have been in operation.

E. When ready to conduct alignment check, procure equipment per Fig. 1.

3. Prepare Airplane for Raising

A. Ascertain that the general requirements for alignment check are complied with as prescribed in par. 2, and the maximum jacking weight shown in Fig. 2 is not exceeded.

B. Check to see if landing gear lockpins (F72735) are in place in nose and each main landing gear.

C. Install jack pads. See Fig. 2 for jack specifications and locations.

(1) Install jack pads at wing points I and II as well as fuselage points III and IV.

D. Locate jacks. See Fig. 1 and 2 for jack specifications and locations.

(1) Place jacks under wing points I and II as well as at fuselage points III and IV.

(2) Extend rams and extension screws snug against jack pads.

(3) Lower ram locknuts within approximately 1.00 of jack head.

E. Remove landing gear wheel chocks.

F. Release parking brakes.

G. Hang plumb bob from bracket (directly above leveling scale) installed at the upper right side of keel beam in main landing gear right whell well (Fig. 3).

H. Position one man at each jack to:

(1) Operate jack.

(2) Watch the pressure gage.

NOTE: Chalk or crayon mark jack gage dial glass at the maximum allowable load for each jack. See Fig. 2 for maximum allowable loads at wing and fuselage jacking points.

(3) Ascertain that ram locknut is approximately 1.00 from jack head throughout the raising operations.

I. Position one man at leveling scale in main landing gear right wheel well to ascertain that airplane is raised in its level attitude so that plumb bob point is logitudinally and transversely within 0.20 of the zero mark on the leveling scale (Fig. 3).

WARNING: DO NOT RAISE AIRPLANE IN AN EXPOSED AREA SUBJECT TO WIND VELOCITIES ABOVE 35 MPH.

4. Raise Airplane

CAUTION: DO NOT EXCEED ALLOWABLE JACK LOADS AS MARKED ON THE PRESSURE GAGE DIAL GLASS. SEE FIG. 2 TO ASCERTAIN THAT GAGES ARE PROPERLY MARKED.

NOTE: The use of the hand pump is preferred to the pneumatically operated pump to achieve precise leveling.

A. Raise airplane until the landing gear wheels clear the floor by approximately 3.00 by simultaneously lifting at wing points I and II and fuselage point III.

NOTE: Do not apply any load on jack at fuselage point IV. Follow up movement of this point by keeping ram snug against pad. Jack at this point is used only to longitudinally stabilize the airplane.

Do not raise fuselage point III ahead of wing points I and II. This operation will overlad jacks at fuselage points III and IV.

(1) Ascertain that airplane is being raised in its level attitude by observing that plumb bob point against leveling scale is within 0.20 of zero mark in both longitudinal as well as transverse direction (Fig. 3).

(2) Ascertain that during raising operations ram locknuts are approximately 1.00 from jack head.

(3) Allow landing gear oleos to extend to their fully extended positions.

5. Level the Airplane

A. Preliminary level airplane by using plumb bob and leveling scale mounted in main landing gear right wheel we.. (Fig. 3).

NOTE: The use of the hand pump is preferred to the pneumatically operated pump to achieve precise leveling.

(1) Level the airplane tramsversely by operating wing jacks at points I and II.

NOTE: Follow up upward motion of fuselage point IV by keeping ram snug against pad if leveling operation causes airplane to undergo a left roll.

Follow up downward motion of fuselage point IV by keeping ram snug against pad if leveling operation casues airplane to undergo a right roll.

(2) Level the airplane longitudinally by operating fuselage jacks at points III and IV.

NOTE: Follow up upward motion of fuselage point IV by keeping ram snug against pad if leveling operation causes airplane nose to go up.

(3) Consider the iarplane to be in a preliminary level position when the plumb bob point against the leveling scale is within 0.10 inch of the zero mark in both spanwise and longitudinal directions (Fig. 3).

NOTE: Ascertain that landing gear wheels do not touch floor during leveling operations.

Ascertain that during leveling operations ram locknuts are approximately 1.00 from jack head.

B. Final level the airplane by using engineer's level or equivalent.

(1) Set up level at airplane leveling and elevation reading position as shown in Fig. 4.

(2) Transversely level airplane as follows:

(a) Place measuring tape against left wing point KK.

NOTE: Use ladder or aerostand as required.

(b) Sight and record reading.

(c) Place measuring tape against right wing point KK.

NOTE: Use ladder or aerostand as required.

(d) Sight and record reading.

(e) Level airplane transversely per par. A.(1) until left and right readings are within 0.020. Calculate the average of these two readings and record.

(3) Longitudinally level airplane as follows:

(a) Place measuring tape properly assembled as shown on Fig. 4, Detail II, on point BB, left side of the fuselage.

NOTE: Use ladder or aerostand as required.

(b) Sight and record readings. Add 53.12 to the reading at point KK.

(c) Level airplane longitudinally per par. A.(2) until reading per step (3)(b) is within 0.020 of reading determined at step (2)(e).

NOTE: Ascertain that landing gear wheels do not touch floor during leveling operations.

Ascertain that during leveling operations ram locknuts are approximately 1.00 from jack head.

Do not disturb the instrument level setup.

6. Lock All Jacks

   A. Lower and hand-tighten ram locknuts against jack head on all jacks.

   B. Wrench-tighten ram locknut set screws on all jacks.

7. Bleed All Jacks

   A. Gradually open release valve not more than 1-1/2 turn.

   B. Check if pressure gage reads zero.

      NOTE: On some hydraulic jack models in poor condition the ram locknut turns, allowing ram to move downward after release valve is opened even though locknut set screw is wrench-tightened. Observe carefully for such malfunctioning, and if discovered, immediately close release valve. Continue with alignment check operations. If, due to leaky release valve, ram continues to move downward, lower airplane per par. 24 and 25 and replace faulty jack.

8. Check Attitude of Airplane

   A. Take final readings at the left and right wing points KK. Calculate the average of these two readings.

   B. Take final reading at point BB. Add 53.12 to the reading at point KK.

   C. Consider airplane leveled within required tolerance if final readings taken at steps A and B are within 0.020.

9. Relevel Airplane as Follows if after Bleeding Jacks the Airplane Attitude is Not within Required Tolerance

   A. Proceed as follows if left (or right) wing point KK is low:

      (1) Operate jack at body point IV.

         (a) Loosen ram locknut set screw.

         (b) Slowly raise ram just enough to relieve load on locknut so that it is free to turn.

         (c) Turn ram locknut to raise it about 0.50.

(2) Operate jack next to left (or right) point KK.

(a) Loosen ram locknut set screw.

(b) Slowly raise ram the exact distance that the point KK is low.

NOTE: Ascertain that locknut is not turned when tightening set screw.

(c) Remove feeler gages.

(d) Hand-tighten ram locknut against jack head.

(e) Wrench-tighten ram locknut set screw.

NOTE: Ascertain that locknut is not turned when tightening set screw.

(f) Bleed jack.

NOTE: Before raising low point KK ascertain in which direction airplane will tend to roll. Follow up upward motion of body point IV by keeping ram snug against pad if leveling operation causes airplane to undergo a left roll. Follow up downward motion of fuselage point IV by keeping ram snug against pad if pressure gage at this jack indicates that airplane is tending to undergo a right roll.

(g) Check if pressure gage reads zero.

(3) Take readings at left and right points KK and record. Calculate the average of left and right point KK readings.

(4) Repeat steps (2) and (3) until the low point is brought within 0.020 of opposite point KK.

(5) Take a reading at point BB. Add 53.12 to the reading taken at point KK.

(6) Consider airplane leveled within required tolerance if readings determined at steps (3) and (5) are within 0.020.

(7) Operate jack at fuselage point IV.

(a) Lower and hand-tighten ram locknut against jack head.

(b) Wrench-tighten locknut set screw.

(c) Bleed jack.

(d) Check if pressure gage reads zero.

B. Proceed as follows if left (or right) point KK is high:

(1) Operate jack at fuselage point IV.

(a) Loosen ram locknut set screw.

(b) Slowly raise ram just enough to relieve load on locknut so that it is free to turn.

(c) Turn ram locknut to raise it about 0.50.

(2) Operate jack next to high left (or right) point KK.

(a) Loosen ram locknut set screw.

(b) Slowly raise ram just enough to relieve load on locknut so that it is free to turn.

NOTE: Do not turn locknut at this step.

(c) Hand-turn ram locknut to raise it by the exact amount that point KK is high.

NOTE: Use feeler gages between locknut and jack head.

(d) Remove feeler gages.

(e) Wrench-tighten ram locknut set screw.

(f) Bleed jack.

NOTE: Before bleeding jack ascertain in which direction airplane will tend to roll. Follow up upward motion of fuselage point IV by keeping ram snug against pad if leveling operation causes airplane to undergo a left roll. Follow up downward motion of fuselage point IV by keeping ram snug against pad if pressure gage at this jack indicates that airplane is tending to undergo a right roll.

(g) Check if pressure gage reads zero.

(3) Take readings at left and right points KK. Calculate the average of left and right point KK readings.

(4) Repeat steps (2) and (3) until high point KK is brought within 0.020 of opposite point KK.

(5) Take a reading at point BB. Add 53.12 to the reading taken at point KK.

(6) Consider airplane leveled within required tolerance if readings determined at steps (3) and (5) are within 0.020.

(7) Operate jack at fuselage point IV.

(a) Lower and hand-tighten ram locknut against jack head.

(b) Wrench-tighten locknut set screw.

(c) Bleed jack.

(d) Check if pressure gage reads zero.

C. Proceed as follows if leveling at point BB is low:

(1) Record distance in inches that the leveling point BB is low.

(a) Multiply this distance by 0.64.

(2) Operate jack at body point IV.

(a) Loosen ram locknut set screw.

(b) Slowly raise ram just enough to relieve load on locknut so that it is free to turn.

(c) Turn ram locknut to raise it about 0.50.

(3) Operate jack at fuselage point III.

(a) Loosen ram locknut set screw.

(b) Slowly raise ram just enough to relieve load on locknut so that it is free to turn.

NOTE: Do not turn ram locknut at this step.

(c) Turn ram locknut to raise it by the distance determined at step (1).

NOTE: Use feeler gages between locknut and jack head.

(d) Wrench-tighten ram locknut set screw.

NOTE: Ascertain that locknut is not turned when tightening set screw.

(e) Bleed jack.

(f) Check if pressure gage reads zero.

(4) Take a reading at point BB. Add 53.12 to this reading.

(5) Repeat steps (1), (3), and (4) until point BB is brought within 0.020 of previous average reading of wing points KK.

(6) Recheck left and right wing point KK readings and record.

(7) Consider airplane leveled within required tolerance if readings determined at steps (4) and (6) are within 0.020.

(8) Operate jack at fuselage point IV.

(a) Snug up ram against jack pad.

(b) Lower and hand-tighten ram locknut against jack head.

(c) Bleed jack.

(d) Check if pressure gage reads zero.

D. Proceed as follows if point BB is high:

(1) Record distance in inches that point BB is high.

(a) Multiply this distance by 0.64.

(2) Operate jack at fuselage point IV.

(a) Loosen ram locknut set screw.

(b) Slowly raise ram just enough to relieve load on locknut so that it is free to turn.

(c) Turn locknut to raise it about 0.50.

(d) Lower ram by approximately 0.25 inches or twice the distance that point BB is high, whichever is greater.

(3) Operate jack at fuselage point III.

(a) Loosen ram locknut set screw.

(b) Slowly raise ram just enough to relieve load on locknut so that it is free to turn.

NOTE: Do not turn locknut at this step.

(c) Slowly raise ram through distance determined at step (1).

NOTE: Use feeler gages between locknut and jack head.

(d) Remove feeler gages.

(e) Lower and hand-tighten ram locknut against jack head.

(f) Wrench-tighten ram locknut set screw.

NOTE: Ascertain that locknut is not turned while tightening set screw.

(g) Bleed jack.

(h) Check if pressure gage reads zero.

(4) Take a reading at point BB.

(5) Repeat steps (1), (3), and (4) until point BB is within 0.020 of previous average reading of wing points KK.

(6) Recheck left and right wing point KK readings and record.

(7) Consider airplane leveled within required tolerance if readings determined at steps (4) and (6) are within 0.020.

(8) Operate jack at fuselage point IV.

(a) Snug up ram against jack pad.

(b) Lower and hand-tighten ram locknut against jack head.

(c) Wrench-tighten locknut set screw.

(d) Bleed jack and check if pressure gage reads zero.

10. Calculate Eye-Piece Elevation of the Engineer's Level

A. Use calculated average of the final readings at wing points KK.

B. Subtract this average reading from 179.38 to obtain the eye-piece elevation reading. The resulting figure is the water line value of the instrument or height of the instrument.

11. Place Floor Mark Labels per Figure 7

A. Hang a plumb bob from point Z (Fuselage Station 1156.60). Place a floor mark label on the floor directly under the plumb bob point. Repeat this step for fuselage points B and D.

B. Hang a plumb bob from the centerline of the nose landing gear oleo by using a plumb bob line holder per Fig. 5. Place floor mark label directly under the plumb bob point.

C. Hang plumb bobs from main landing gear tow rings (Fig. 14) by using plumb bob line holders per Fig. 6. Place floor mark labels directly under the plumb bob points.

D. Open cowlings as required on engines and hang plumb bobs from points S and T on each engine (Fig. 16). Place floor mark labels directly under the plumb bob points.

NOTE: Make use of weighted down sheet metal or plywood pieces for providing a base for floor mark labels if the airplane is located on an unpaved surface.

12. Place Index Card Under Fuselage Points B, D, and at Nose Landing Gear Oleo Centerline per Figure 7

    A. Place index card so that its mark coincides with the cross mark on floor mark label. (See Figure 11.)

    B. Secure this index card to floor by weighing it down or by means of masking tape.

13. Place and Set Up Theodolite or Engineer's Transit

    A. Place the instrument directly over the floor mark established by 11.A. (See Figure 11.)

    B. Set up the instrument eye-piece approximately 36.00 below point Z on the fuselage.

    C. Place an index card line at floor mark under the fuselage point D and set the instrument base to zero azimuth. Take a sight on projected point D at the floor.

14. Trim Stabilizer

    A. See Figure 12.

    B. Set trammels so that distance between its points is 41.57 ± .03. (See Figure 9.)

    C. Trim stabilizer to obtain 0 degrees "AIRPLANE TRIM AT ZERO" position by using power controls in control cabin. See Maintenance Manual, Chapter 27.

    D. Check stabilizer trim by means of trammel set to 41.57 ± .03.

    E. If trammel check indicates improper trim setting, proceed as follows:

        (1) De-energize stabilizer trim control system by throwing trim cutout switch in direction indicated. The switch is located next to RH stabilizer trim control wheel in the control cabin. See Maintenance Manual, Chapter 27.

        (2) Manually adjust stabilizer trim by rotating trim control wheel until the distance between upper and lower gimbal centerlines is within 41.57 ± .10.

            NOTE: Entire stabilizer trimming operation may be accomplished manually per step E.(2) if no power is available.

15. Take Elevation Readings

A. Determine elevation scale readings with the engineer's level located at airplane leveling and elevation reading position as shown on Fig. 13.

NOTE: Use ladder or aerostand as required.

B. Add the eye-piece elevation as calculated in par. 10 to all elevation scale readings. The results are the elevations of the various alignment points in terms of waterline values.

C. Take elevation readings at fuselage points A, B and D, using a measuring tape.

D. Take readings at wing points KK, L and LL, using a measuring tape.

(1) Calculate (L-LL) distance for left and right wings and record.

E. Take elevation readings at wing points M, MM, N and NN.

(1) Calculate (M-MM) and (N-NN) distances for left and right wings and record.

F. Take elevation readings at stabilizer points Q, QQ and R, using a measuring tape (Fig. 4).

G. See Fig. 17 for alignment data tabulation.

16. Take Fuselage, Wing and Horizontal Stabilizer Azimuth Readings

A. Take a reading with the theodolite or engineer's transit located at point Z (Fuselage Station 1156.60 per par. 13) to index the instrument on an index card at point D (Fig. 13).

B. Take azimuth readings at left and right wing points K, KK, L, LL, M, MM, N and NN by sighting on plumb bob line. Use plumb bob line holder per Fig. 8.

C. Take azimuth readings at left and right stabilizer points Q, QQ and R, by sighting on plumb bob line (Fig. 13). Use plumb bob line holder per Fig. 8.

NOTE: Ascertain that stabilizer has been trimmed per par. 14.

D. See Fig. 17 for alignment data tabulation.

17. Landing Gear Symmetry Check

A. With the airplane supported on jacks and in the leveled condition, as detailed in 51-50-3, check the symmetry of the landing gear as follows: (See figure 14.)

(1) Project the airplane centerline (BL 0.00) onto the floor. Use a line chalked on the floor or a cord stretched taut between two supports.

(2) Measure the distance between the center of each main gear tow ring and BL 0.00. The measurement may be taken from the points established in paragraph 11, or from plumb bobs suspended from the two rings. The difference between these dimensions, dL and dR, must not exceed 1.000 inch.

NOTE: Attach a 50-pound spring scale to the measuring tape and apply a load of 25 pounds when taking these measurements.

(3) Project the lateral line between the two tow ring centers onto the floor, or use a cord as in subparagraph 17.A.(1). Measure rearwards from the intersection of this line and BL 0.00 the distance shown in detail III of figure 14. This should coincide with the plumb bob suspended from station 1156.60.

(4) Measure the distance from this point to the center of the tow rings of the left and right main landing gears. These dimensions, cL and cR, should not differ by more than 1.000 inch.

(5) Measure the distance between the centerline of the nose landing gear oleo and BL 0.00. The nose landing gear should be centered ± 0.20 inch.

(6) Measure the distance between the centerline of the nose landing gear oleo and points B and D. See figure 17 for dimensions.

18. Engines - Alignment Check

A. Using a 100-foot steel tape, measure the distance to BL 0.00 of both engines. The measurement may be taken from the points established in paragraph 11, or from plumb lines suspended from the engines. See figures 16 and 17.

NOTE: Attach a 50-pound spring scale to the measuring tape and apply a load of 25 pounds when taking these measurements.

B. See figure 17 for averaged dimensions and variations.

19. Set Up for Top of Rudder Fairing Azimuth Readings

    A. See figures 4 and 11.

    B. With engineer's transit at Fuselage Station 1156.60, set transit base on 180-degree mark with eye-piece pointing aft on the buttock line zero plane.

    C. Locate the first auxiliary point aft of the airplane.

20. Take Azimuth Reading of Top of Rudder Fairing

    A. See figures 4 and 11.

    B. Swing eye-piece to fin tip point. Sight and record azimuth. Indicate whether to the left or right.

    C. See figure 17 for alignment data.

21. Take Plumb Bob - Leveling Scale Reading

    A. See figure 3.

    B. Take plumb bob point reading against leveling scale and record.

22. Prepare Airplane for Lowering

    A. Remove aerostands, ladders, and any other equipment which may interfere with airplane structure during lowering operation.

    B. Check if all landing gear downlocks are in place.

    C. Set parking brakes.

    D. Place wheel chocks under all landing gear wheels.

    E. Loosen ram locknut set screws on all jacks.

    F. Shut off release valves on all jacks.

    G. Position one man at each jack.

    H. Position one man in main landing gear LH wheel well next to plumb bob leveling scale in order to ensure that airplane is lowered in its level attitude.

    J. Slowly raise rams on all jacks just enough to relieve load on ram locknuts so that they are free to turn.

    K. Turn ram locknuts on all jacks to raise them approximately 1.00.

23. Lower Airplane

A. Lower the airplane as detailed in 51-50-4.

24. Remove Plumb Bob

A. Remove plumb bob located in the main landing gear wheel well. (See figure 3.)

25. Remove Jacks and Jack Pads

ITEM	NO. REQ'D	IDENTIFICATION	SOURCE
HYDRAULIC JACK WING POINTS I & II [A]	2	MODEL B4A CAPACITY: 25 TONS (USA) MIN HEIGHT: 60, 78 OR 96 INCHES RAM STROKE: 44 INCHES MAX SCREW EXTENSION: 16 INCHES	REGENT JACK MFG. CO., 11905 REGENT VIEW AVE. DOWNEY, CALIF. 90241 OR EQUIVALENT
HYDRAULIC JACK FUSELAGE POINT III [A]	1	MODEL B4A CAPACITY: 25 TONS (USA) MIN HEIGHT: 55, 73, 91, 109, 127 OR 145 INCHES RAM STROKE: 40 INCHES MAX SCREW EXTENSION: 15 INCHES	REGENT JACK MFG. CO., 11905 REGENT VIEW AVE. DOWNEY, CALIF. 90241 OR EQUIVALENT
HYDRAULIC JACK FUSELAGE POINT IV [A]	1	MODEL B4A CAPACITY: 25 TONS (USA) MIN HEIGHT: 55, 73, 91, 109, 127 OR 145 INCHES RAM STROKE: 40 INCHES MAX SCREW EXTENSION: 15 INCHES	REGENT JACK MFG. CO., 11905 REGENT VIEW AVE. DOWNEY, CALIF. 90241 OR EQUIVALENT
JACK PAD WING POINTS I & II	2	PART NO. F71156	THE BOEING COMPANY
JACK PAD FUSELAGE POINT III	1	PART NO. F80001	THE BOEING COMPANY
JACK PAD FUSELAGE POINT IV	1	PART NO. F80000	THE BOEING COMPANY
ENGINEER'S TRANSIT [B]	1	THEODOLITE	KEUFFEL AND ESSER COMPANY, 2701 2ND AVE. SEATTLE, WASH. 98121
LEVEL [C]	1	DUMPY LEVEL	KEUFFEL AND ESSER COMPANY, 2701 2ND AVE. SEATTLE, WASH. 98121

Alignment Check Equipment
Figure 1 (Sheet 1)

ITEM	NO. REQ'D	IDENTIFICATION	SOURCE
MEASURING BLOCK	1	SEE FIG. 10	FABRICATE
FLEXIBILE MEASURING TAPE		12-FOOT LONG MINIMUM	ANY SOURCE
MEASURE TAPE 100-FOOT STEEL	1	NO. 9100 GRADUATED IN 0.10 OF AN INCH	THE LIETZ COMPANEY 1645 E. DEL AMO BLVD. CARSON, CALIF. 90746
PLUMB BOB LINE HOLDER NLG OLEO CENTERLINE	1	SEE FIG. 5	FABRICATE
PLUMB BOB LINE HOLDER NLG OLEO CENTERLINE	2	SEE FIG. 6	FABRICATE
PLUMB BOB LINE HOLDER MLG TOW RING	2	SEE FIG. 6	FABRICATE
PLUMB BOB LINE HOLDER CON-TOURED SURFACE	1	SEE FIG. 8	FABRICATE
PLUMB BOB	1	NO. 87	THE L.S. STARRET COMPANY 121 CRESCENT ST. ATHOL, MASS. 01331
PLUMB BOB LINE	15 FT	24-LB TEST TROLLING LINE	KEUFFEL AND ESSER COMPANY 2701 2ND AVE. SEATTLE, WASH. 98121
TRAMMELS	1	SEE FIG. 9	FABRICATE
FLOOR MARK LABEL (FIG. 7)	14	1-1/2" x 2" SIZE NO. 7590 KUM-KLEEN SELF-ADHESIVE LABELS OR NO. 201 PERFORATED LABELS	AVERY LABEL CO. 1616 S. CALIFORNIA AVE. MONROVIA, CALIF. 91016 DENNISON MFG. CO. 300 HOWARD ST. FRAMINGHAM, MASS. 01701

Alignment Check Equipment
Figure 1 (Sheet 2)

ITEM	NO. REQ'D	IDENTIFICATION	SOURCE
INDEX CARD SEE FIG. 7	5	3" x 5" SIZE OR LARGER	ANY SOURCE
MASKING TAPE	ROLL	1" WIDE	ANY SOURCE
EXTENSION LIGHT	2	100-FOOT EXTENSION CORD	ANY SOURCE
BASE FLOOR MARK LABEL [D]	14	0.032" x 6" x 8" SHEET METAL OR 1/8" x 6" x 8" PLYWOOD OR 1/2" x 6" x 8" LUMBER	ANY SOURCE
WEIGHT FLOOR MARK LABEL BASE [D]	14	5 TO 10 LBS, ANY MATERIAL	ANY SOURCE

NOTE

[A] ALL HYDRAULIC JACKS MUST BE EQUIPPED WITH GAGES READING DIRECTLY IN TONS (USA) OR POUNDS. IF GAGES READ IN PSI THEN A CONVERSION CHART MUST BE AVAILABLE TO CONVERT PSI READINGS INTO TONS (USA) OR POUNDS

[B] MANDATORY

[C] OPTIONAL WITH DUMPY LEVEL AVAILABLE, ONE CREW MAY BE TAKING ELEVATION READINGS WHILE THE OTHER IS TAKING AZIMUTH READINGS WITH THE ENGINEER'S TRANSIT

[D] PROCURE THESE ITEMS IF AIRPLANE IS LOCATED ON AN UNPAVED SURFACE

Alignment Check Equipment
Figure 1 (Sheet 3)

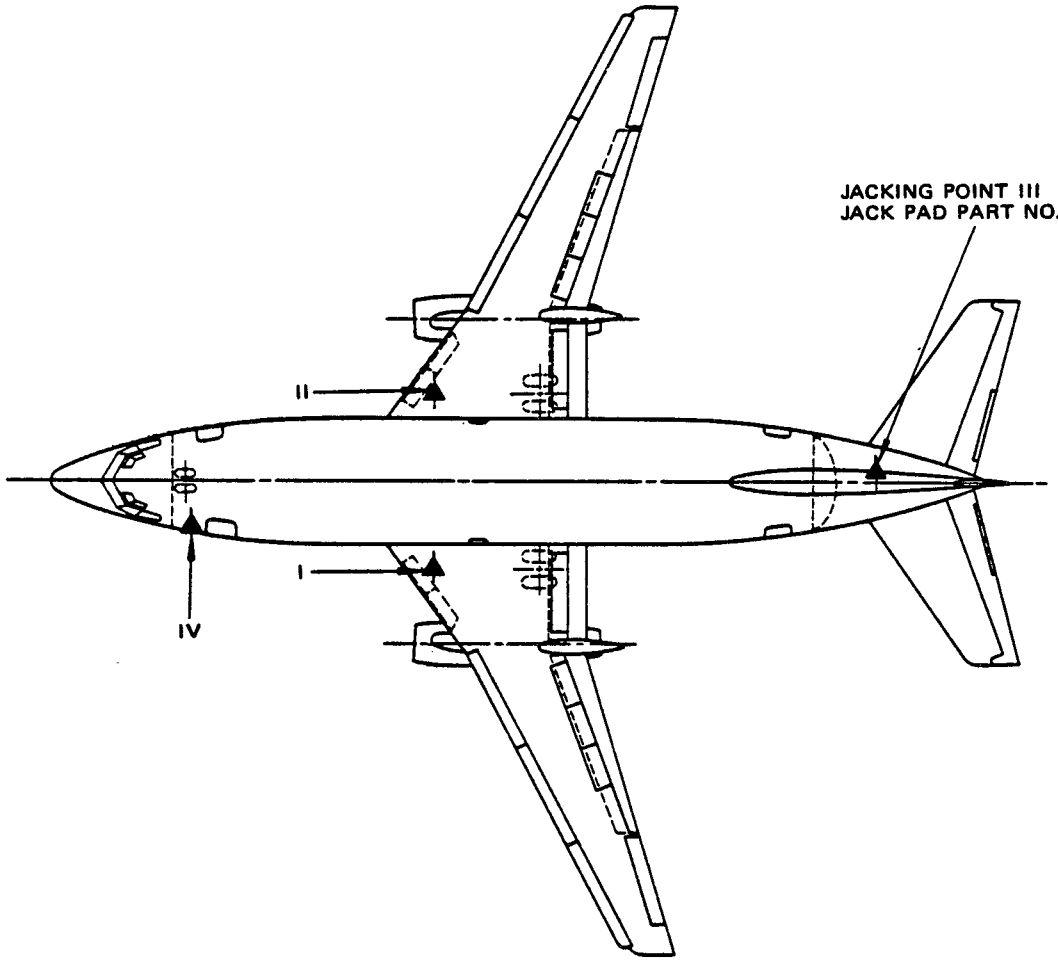

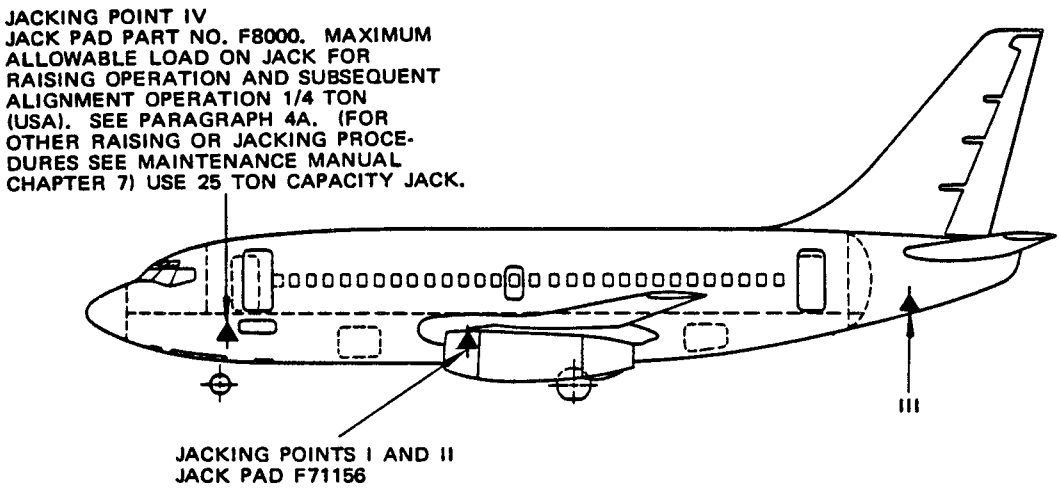

Jacking Diagram
Figure 2 (Sheet 1 of 2)

REF DWG
65C15639
65C15640

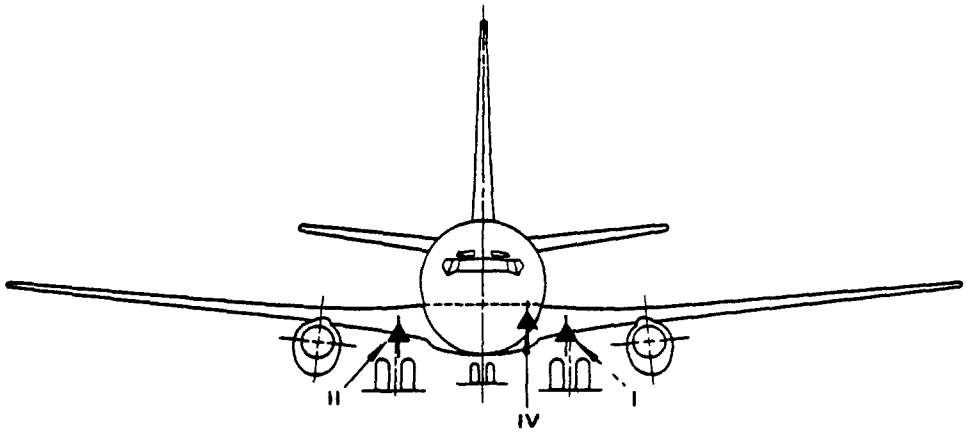

CERTIFIED MAX TAXI GROSS WT	MAX PERMITTED JACKING WT	MAX PERMITTED LOAD AT JACKING POINT			
		I	II	III	IV
97,800	75,000	34,800	34,800	13,600	10,350
100,800 TO 110,000	75,000	35,000	35,000	13,680	10,740
111,000	93,000	43,560	43,560	15,720	13,890

737-100 AIRPLANES

CERTIFIED MAX TAXI GROSS WT	MAX PERMITTED JACKING WT	MAX PERMITTED LOAD AT JACKING POINT			
		I	II	III	IV
100,800 TO 110,000	75,000	35,730	35,730	12,680	11,000
111,000 TO 125,000	93,000	43,560	43,560	15,720	13,890

737-200 AND 737-200 C AIRPLANES

MAXIMUM JACKING LOADS (LBS)

Jacking Diagram
Figure 2 (Sheet 2)

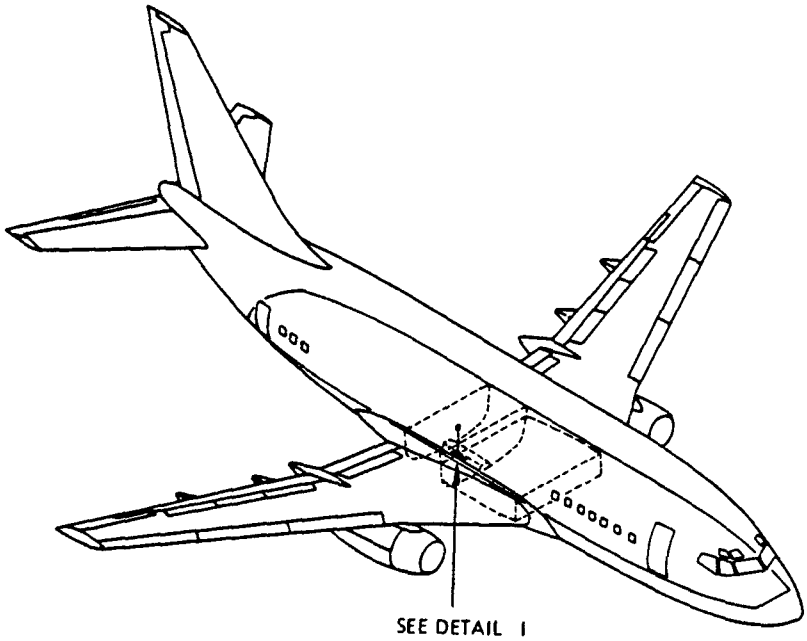

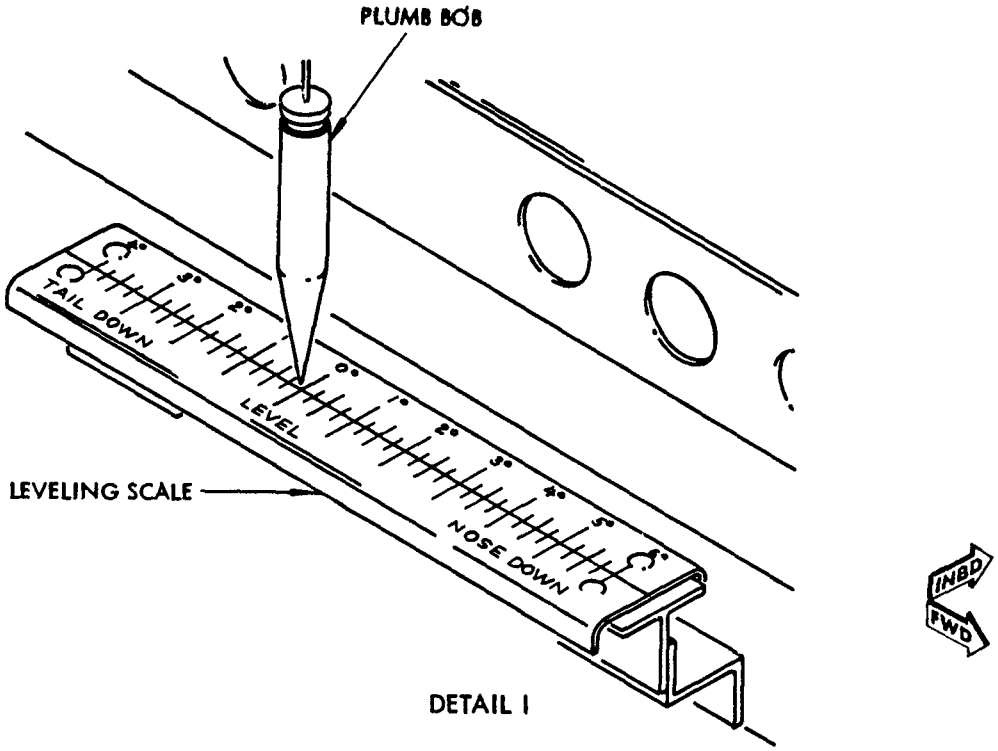

Airplane Leveling Using Plumb Bob
Figure 3

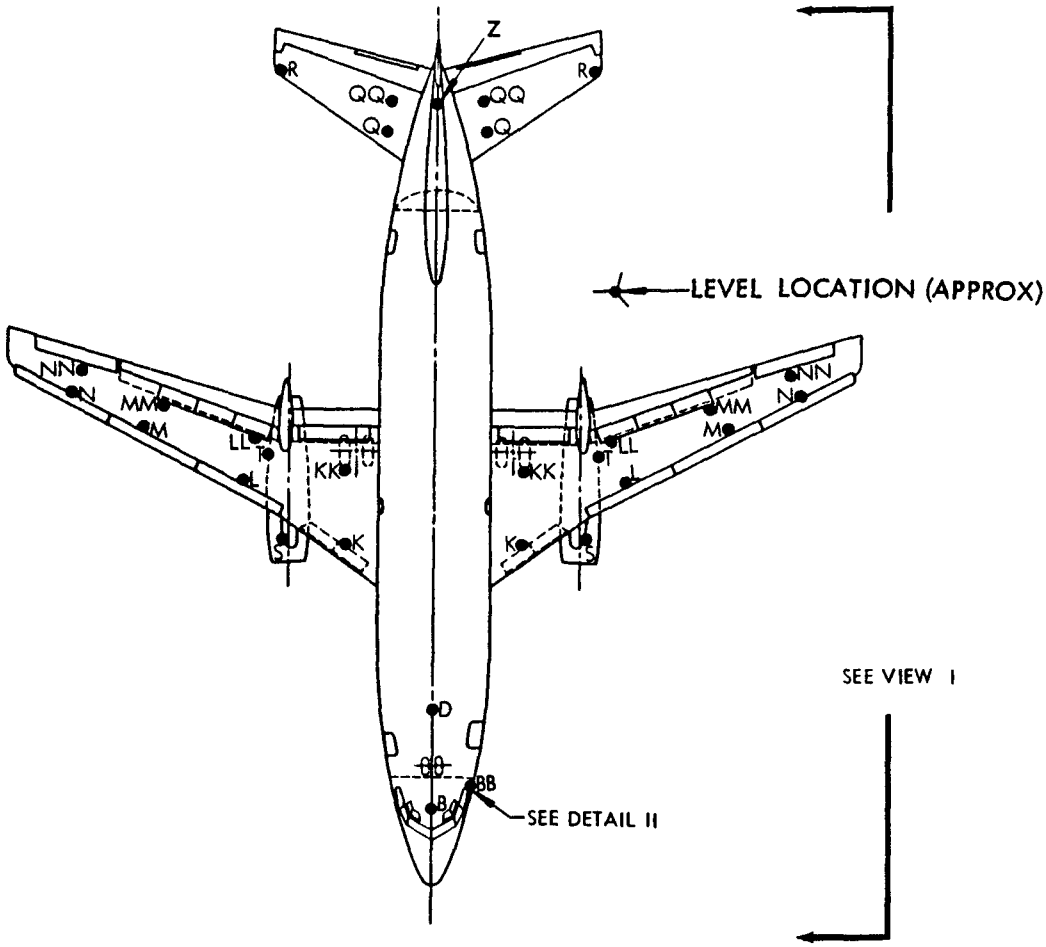

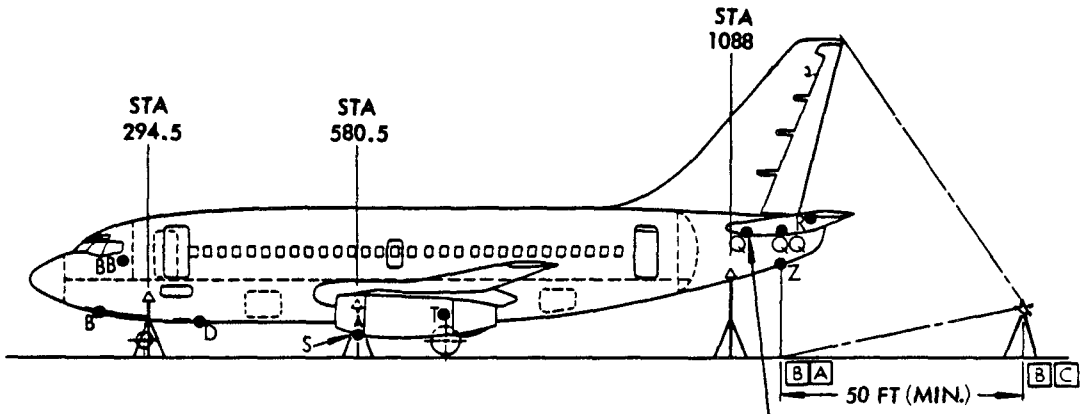

VIEW I

NOTE

[A] INITIAL TRANSIT (OR THEODOLITE) SET UP TO ESTABLISH B.L. "0" PLANE

[B] PLUMB BOB

[C] FIRST AUXILIARY POINT ON GROUND AFT OF PROJECTED POINT "Z"

Alignment Point Locations
Figure 4 (Sheet 1 of 2)

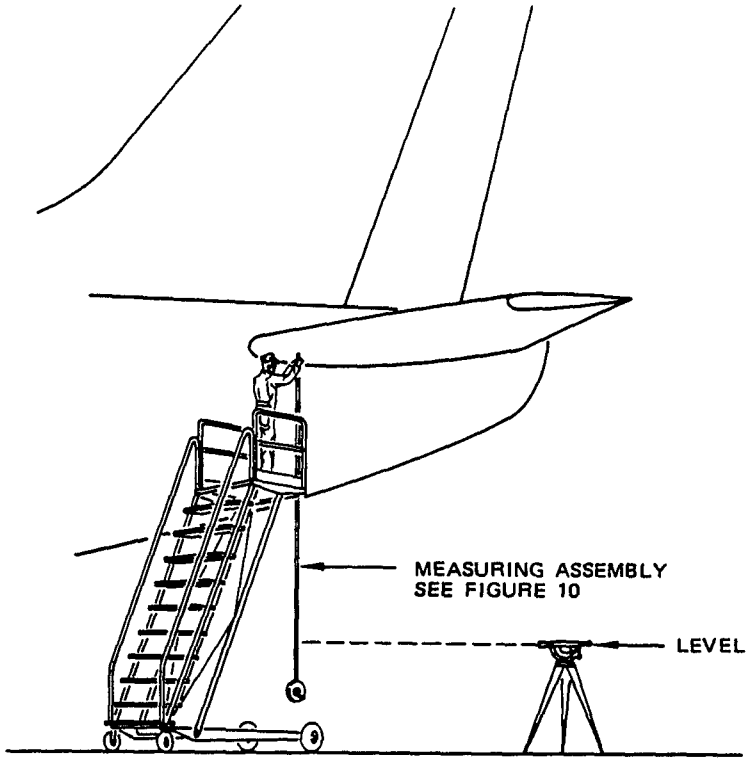

TYPICAL LEVEL SETUP FOR ALL POINTS ON LOWER SURFACES OF BODY, WING, STABILIZER AND NACELLE

DETAIL I

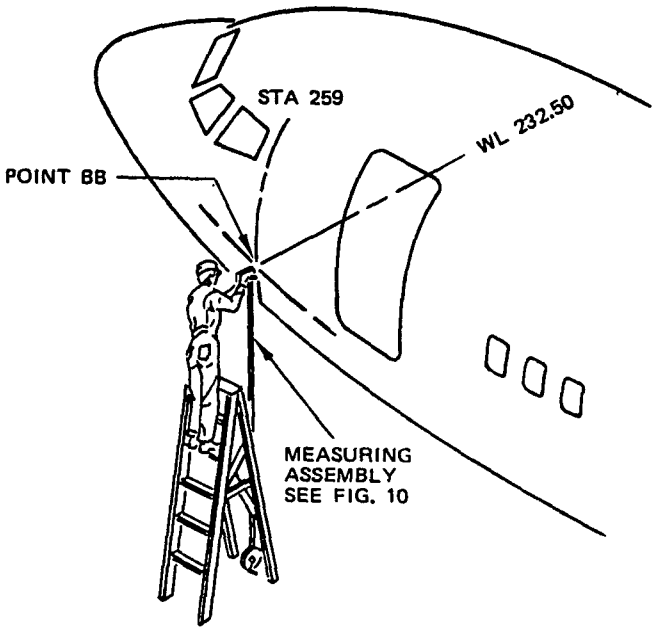

DETAIL II

Alignment Point Locations
Figure 4 (Sheet 2)

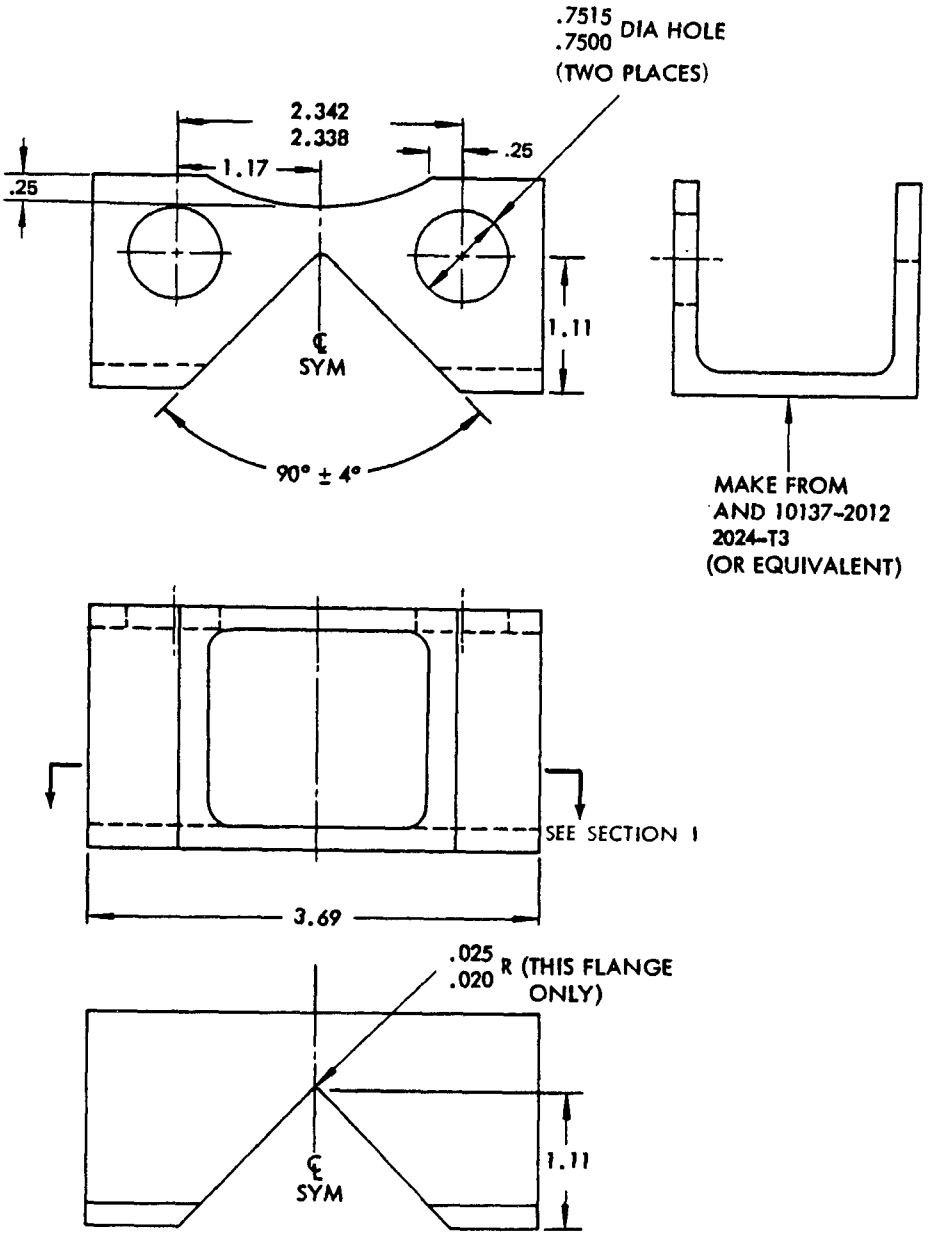

Plumb Bob Line Holder at Nose Landing Gear
Figure 5

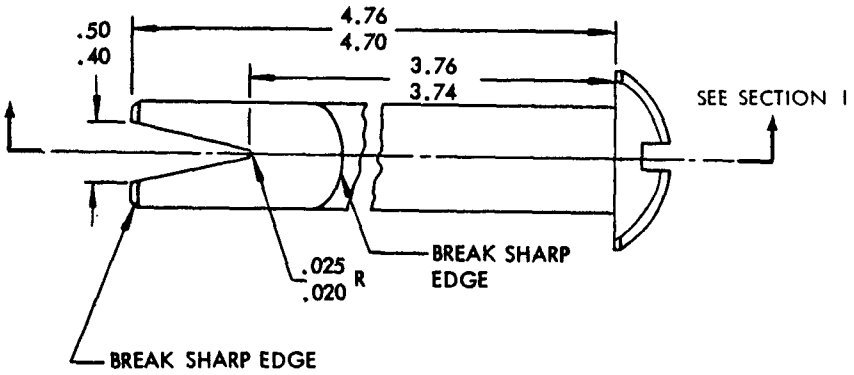

MAKE FROM AN34-84
(OR EQUIVALENT)

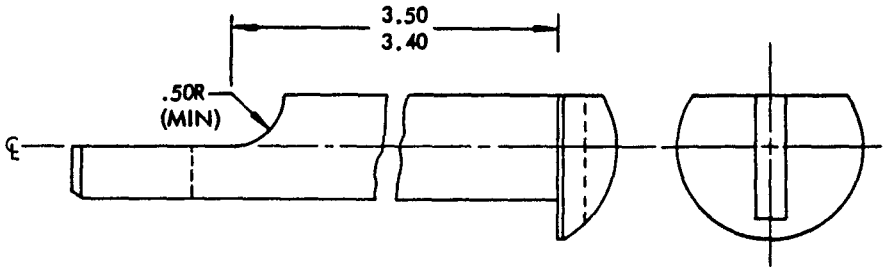

SECTION I

Plumb Bob Line Holder at Main Landing Gear
Figure 6

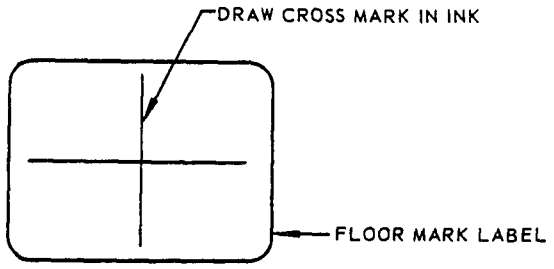

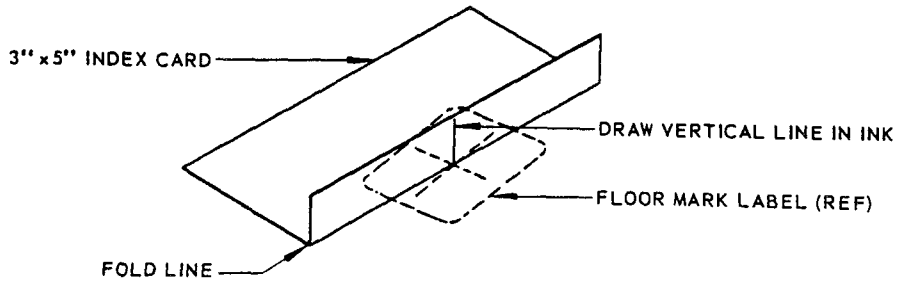

Preparation of Floor Mark Labels and Index Cards
Figure 7

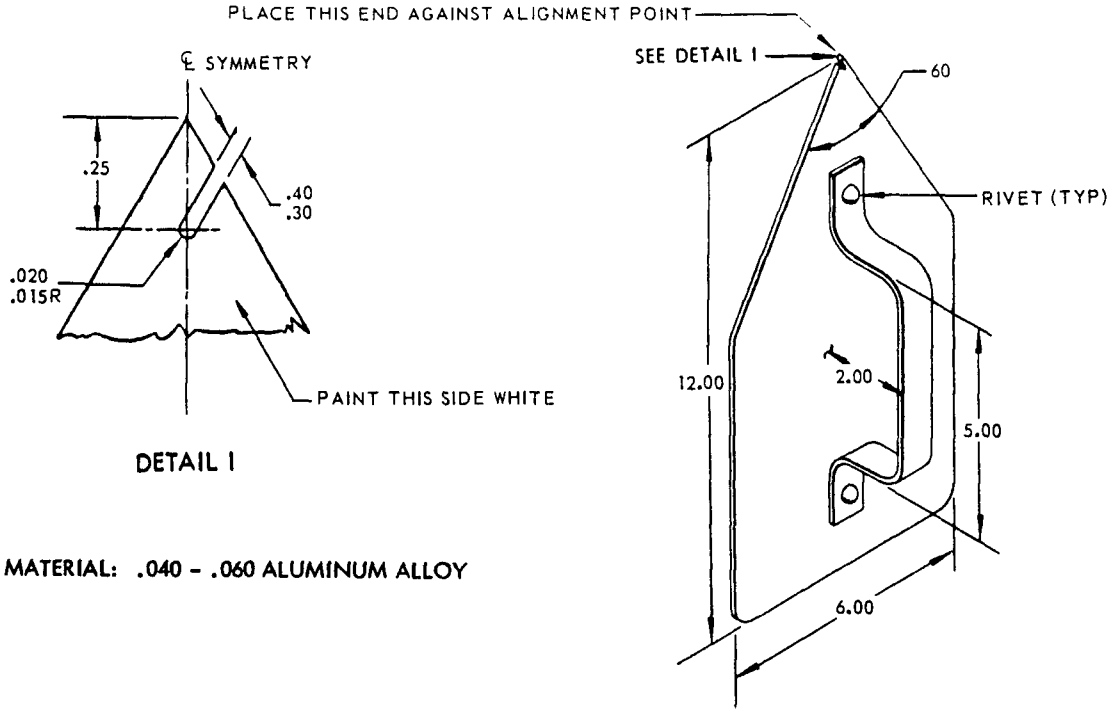

Plumb Bob Line Holder Assembly for Alignment Points on Contoured Surface
Figure 8

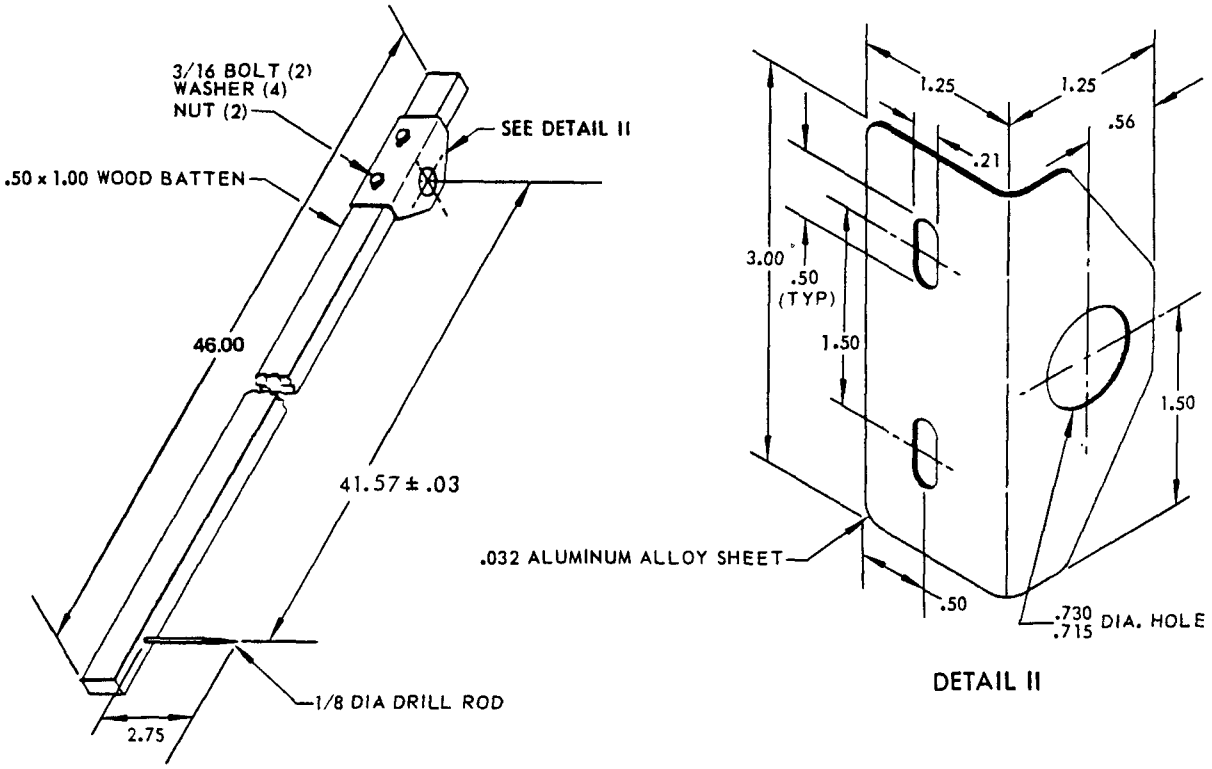

Trammel Assembly
Figure 9

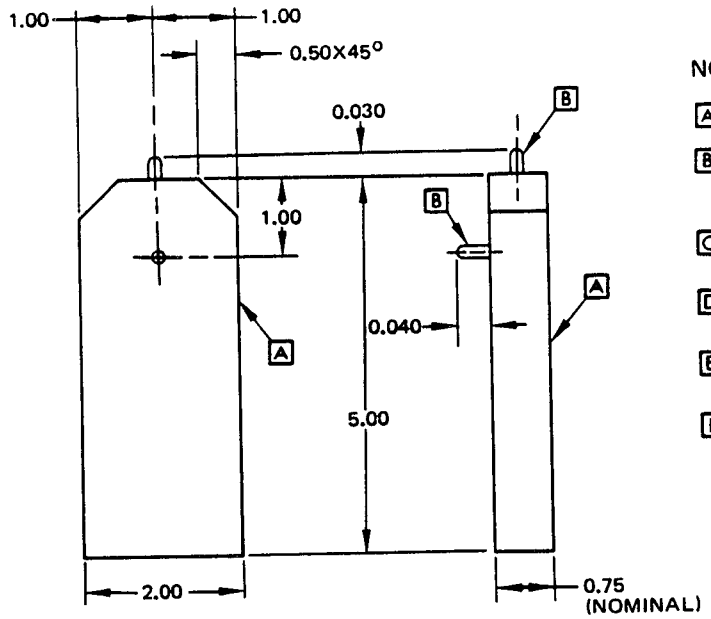

MEASURING BLOCK

NOTES

- A MAKE FROM CLEAR FINISHED WOOD
- B MAKE FROM NO. 6 WOOD SCREW. SCREW IN TO FULL DEPTH OF THREAD. CUT OFF HEAD AND ROUND OFF END.
- C DRILL HOLE IN MEASURING TAPE TO FIT PIN AT 1.00 INCH FROM END OF TAPE
- D MAKE FROM NAIL CUT OFF HEAD AND ROUND OFF END.
- E DRILL 1/8 DIAMETER HOLE IN TAB OF FLEXIBLE SCALE
- F ALLOW SCALE TO HANG VERTICALLY, DO NOT DEFLECT SCALE BY TILTING DOWEL TOO FAR OFF VERTICAL.

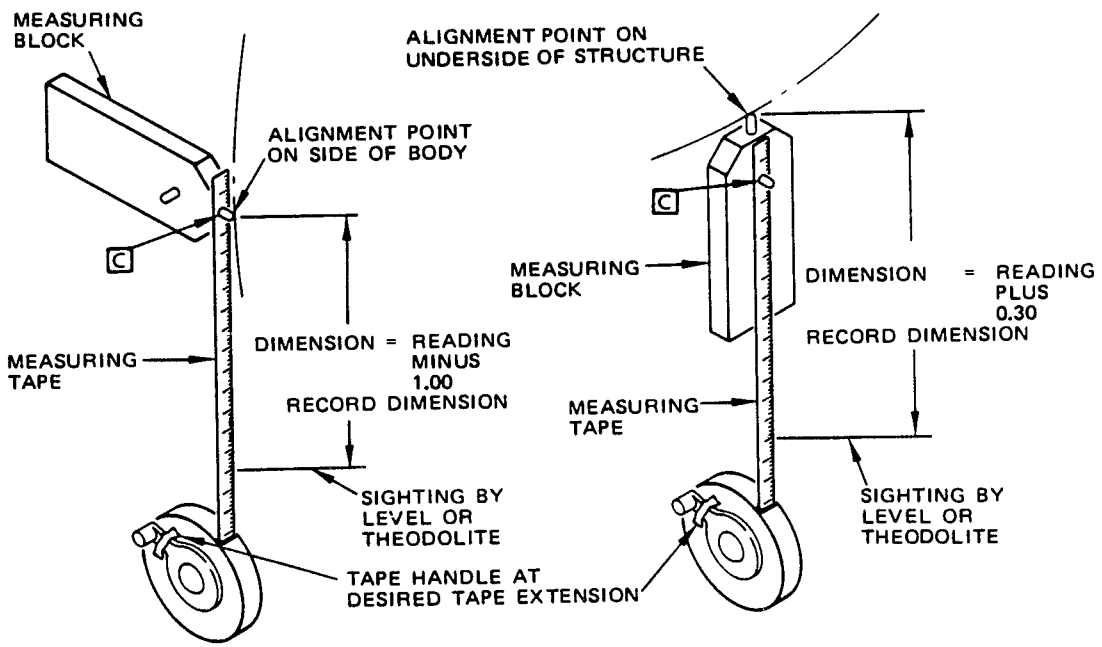

MEASURING METHODS WITH MEASURING BLOCK AND FLEXIBLE MEASURING TAPE ASSEMBLY

METHOD USING MEASURING BLOCK

Measuring Methods and Details
Figure 10 (Sheet 1)

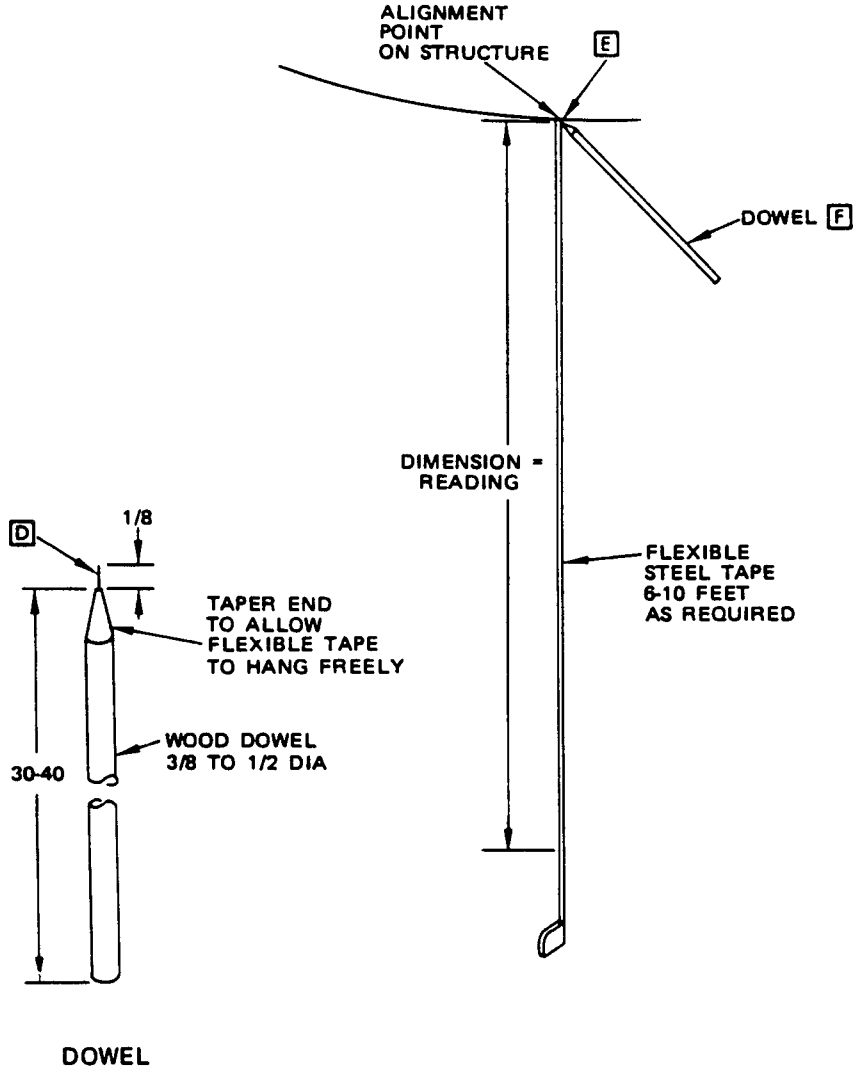

METHOD USING DOWEL

Measuring Methods and Details
Figure 10 (Sheet 2)

NOTE

[A] INITIAL TRANSIT (OR THEODOLITE) SET UP TO ESTABLISH B.L.O. PLANE

[B] PLUMB BOB

[C] 1ST AUXILIARY POINT ON GROUND AFT OF PROJECTED POINT "Z"
(SUPPORTING JACKS NOT SHOWN)
(FOR CHECK ON CL VERT FIN SET UP SEE FIGURE 4, DETAIL I.)

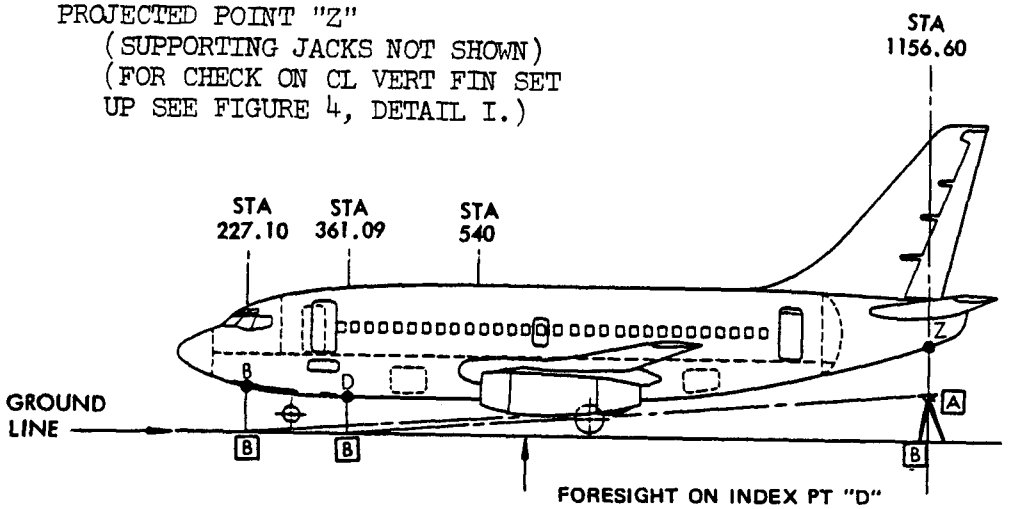

Transit or Theodolite Setup
Figure 11

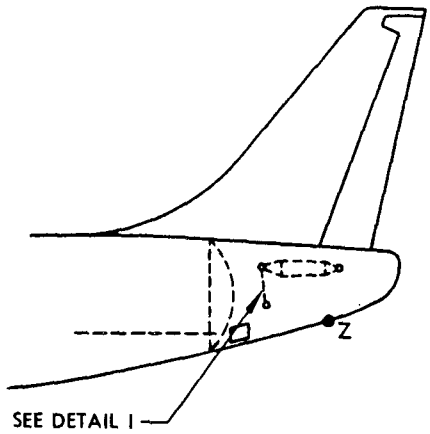

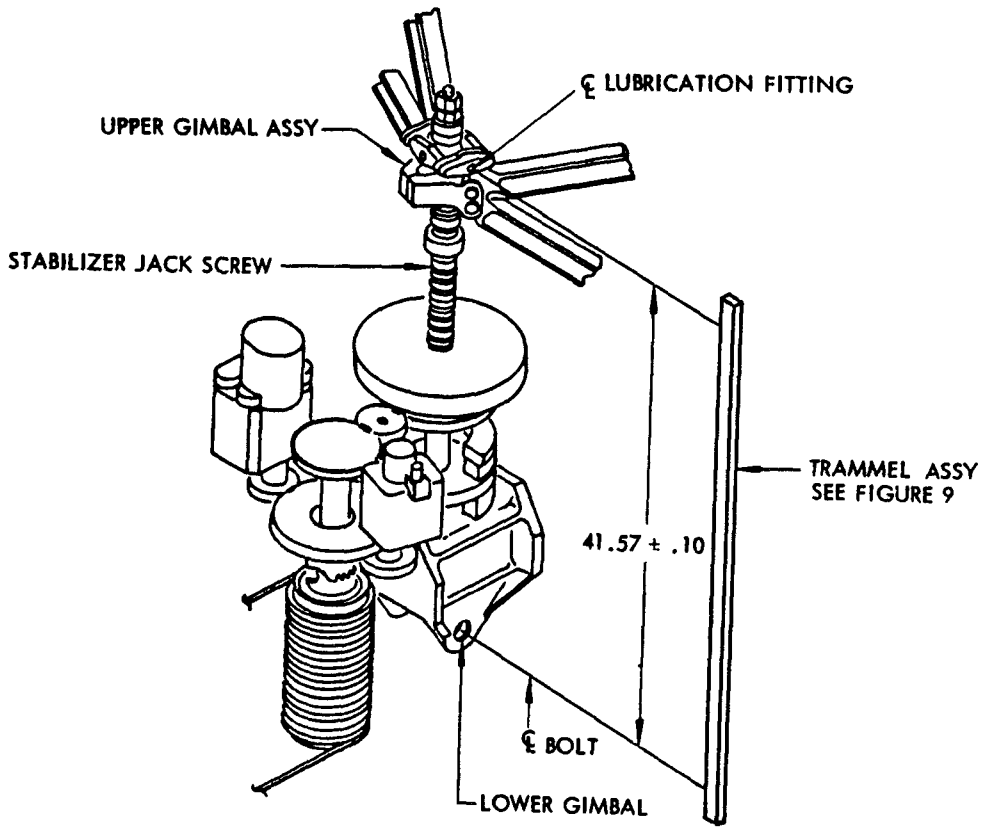

DETAIL I

Stabilizer Alignment Check
Figure 12

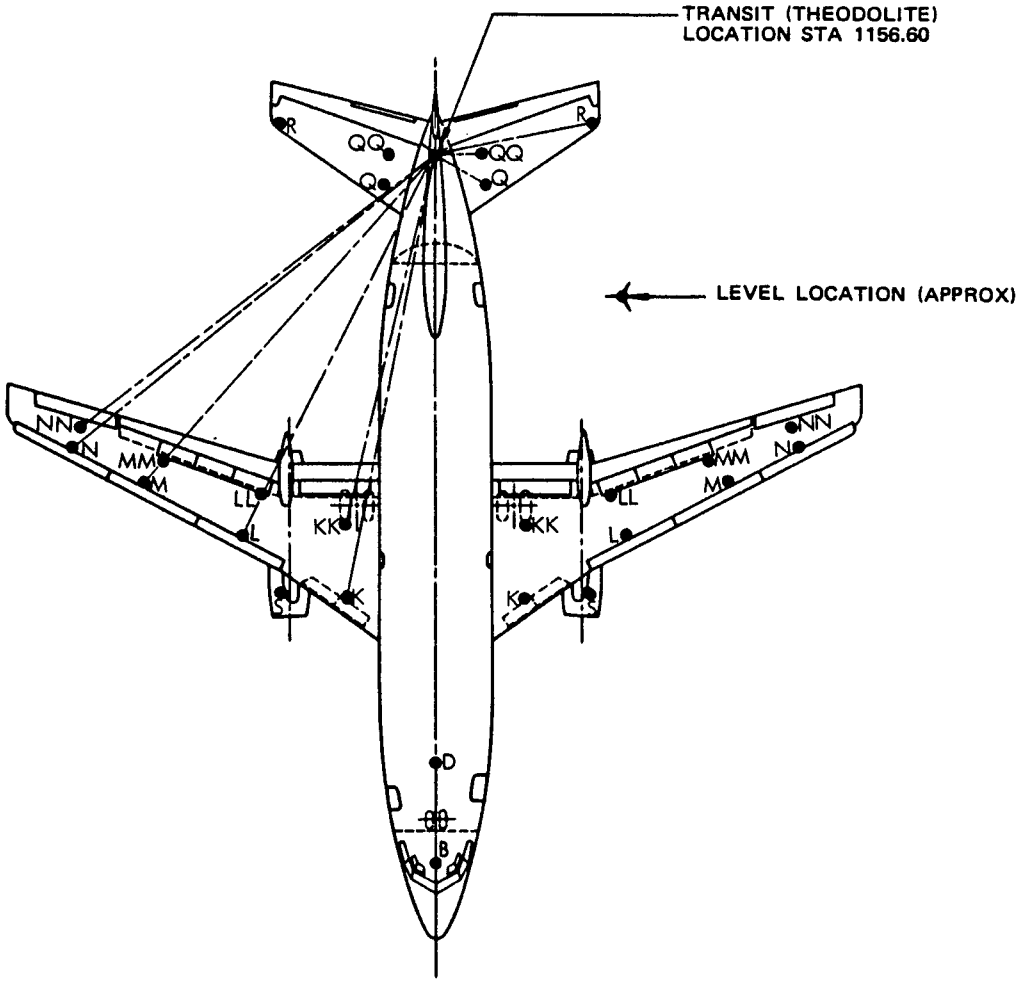

NOTE

- INDICATES POINT IS LOCATED ON LOWER SURFACES OF STRUCTURE AND ENGINES.

Wings and Stabilizer Azimuth Checks
Figure 13

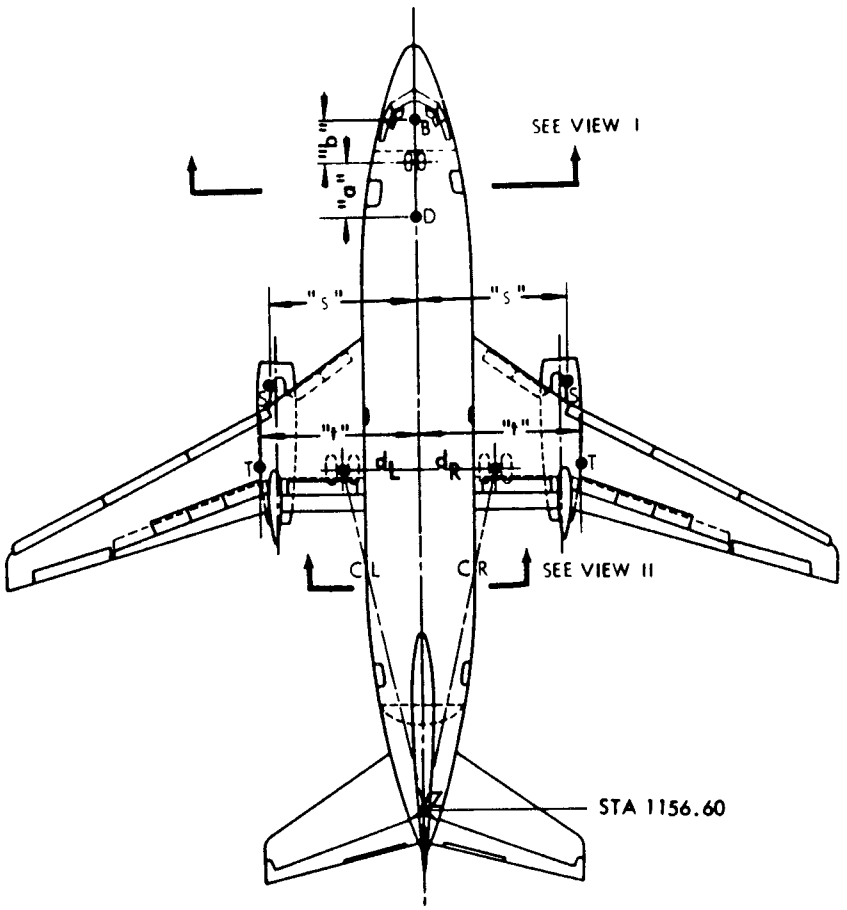

Landing Gear and Engine Alignment Check
Figure 14 (Sheet 1)

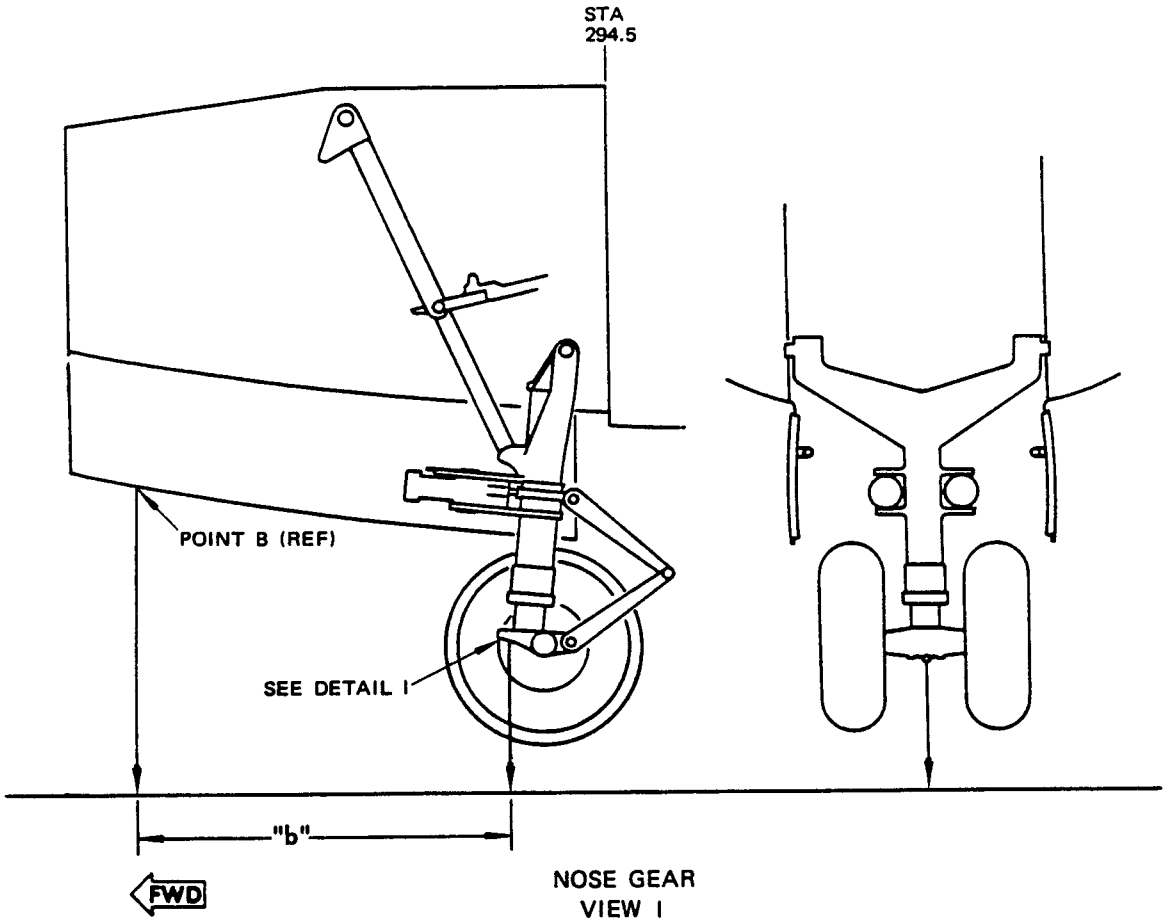

NOSE GEAR
VIEW I

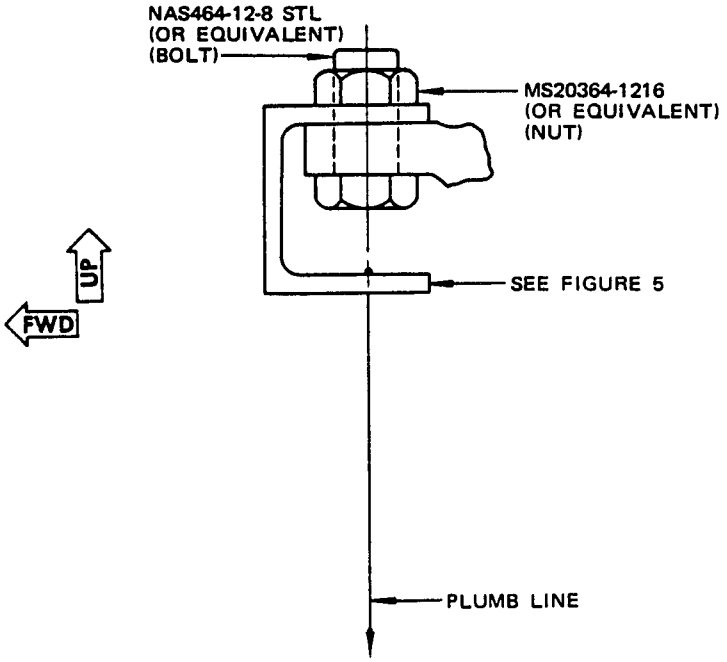

DETAIL I

Landing Gear and Engine Alignment Check
Figure 14 (Sheet 2)

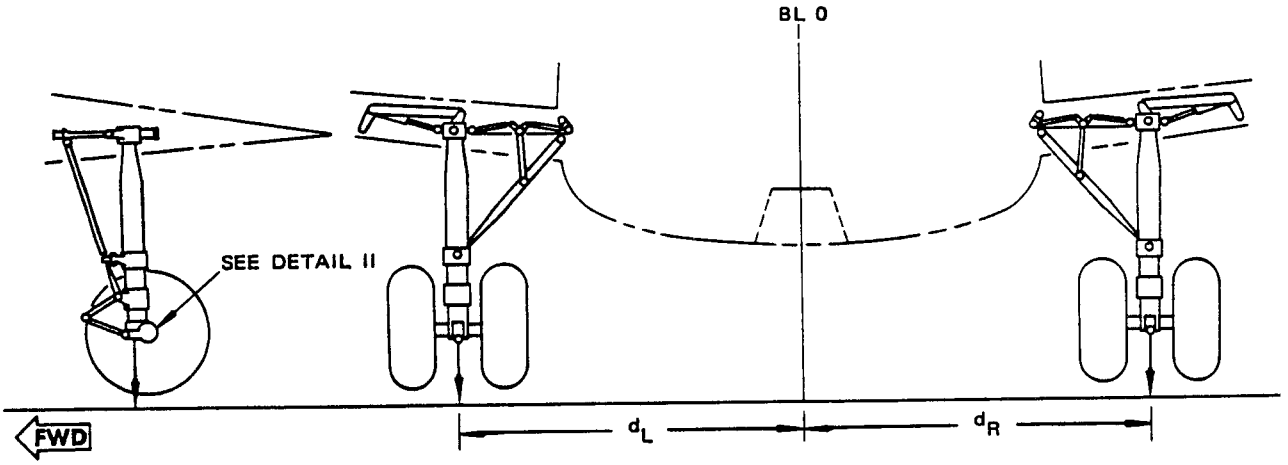

MAIN GEAR
VIEW II

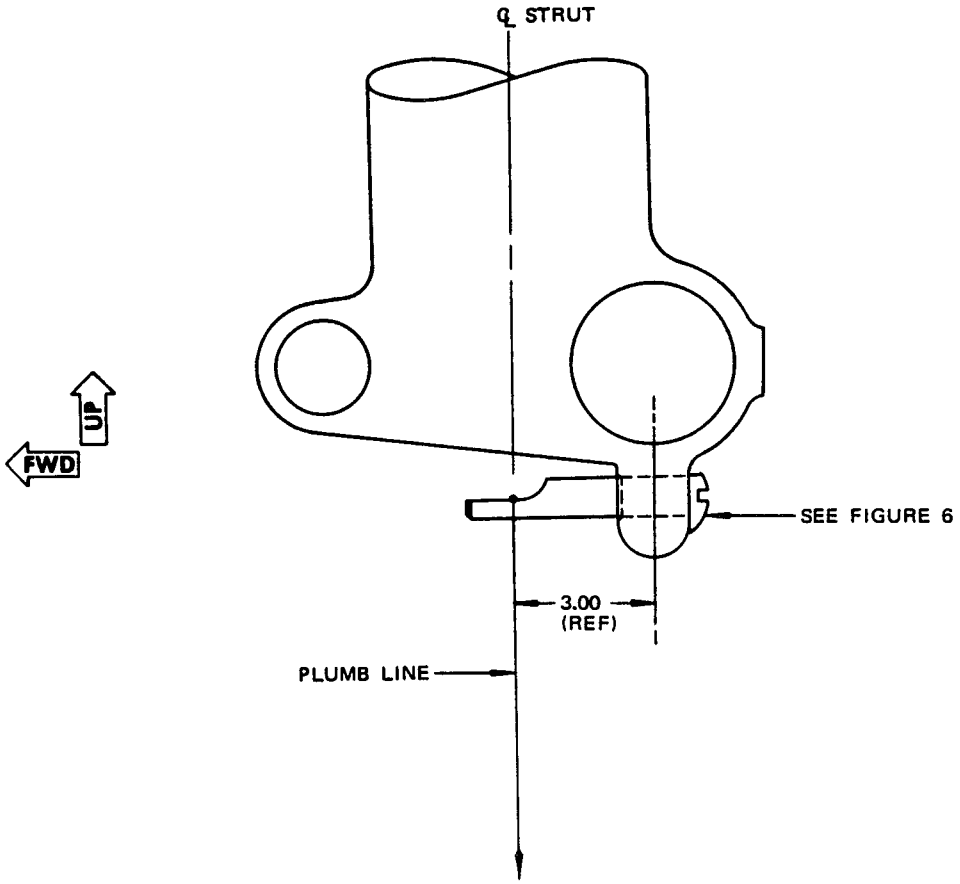

DETAIL II

Landing Gear and Engine Alignment Check
Figure 14 (Sheet 3)

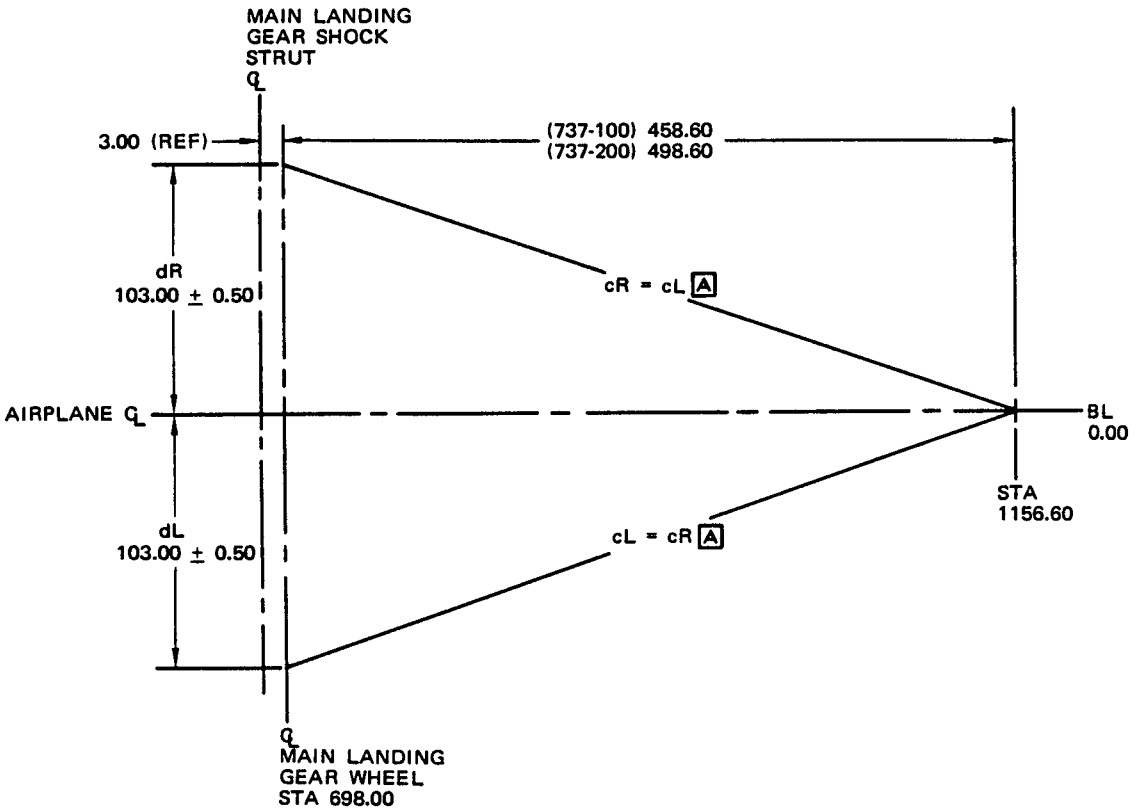

NOTE

A A MAXIMUM VARIATION OF 1.00 INCH IS PERMITTED BETWEEN THESE TWO DIMENSIONS

LANDING GEAR SYMMETRY CHECK
DETAIL III

Landing Gear and Engine Alignment Check
Figure 14 (Sheet 4)

REF DWG 65-45734

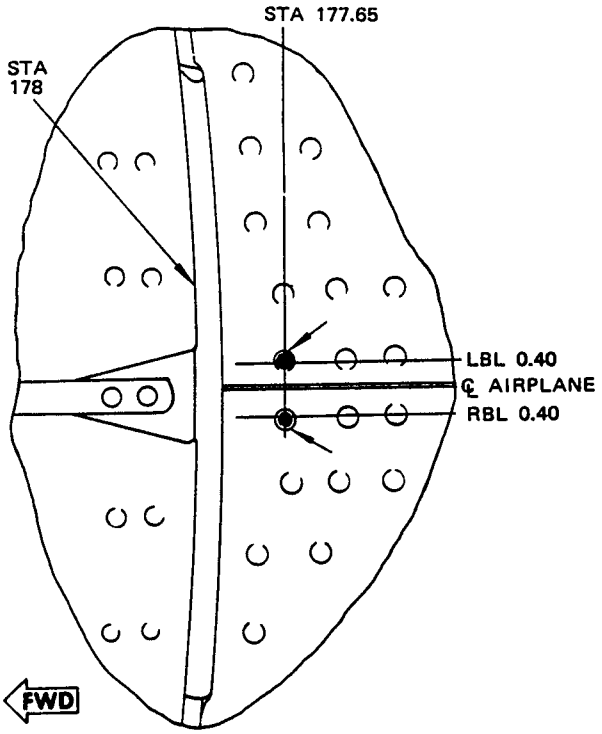

BOTTOM VIEW OF FUSELAGE
POINT "A"

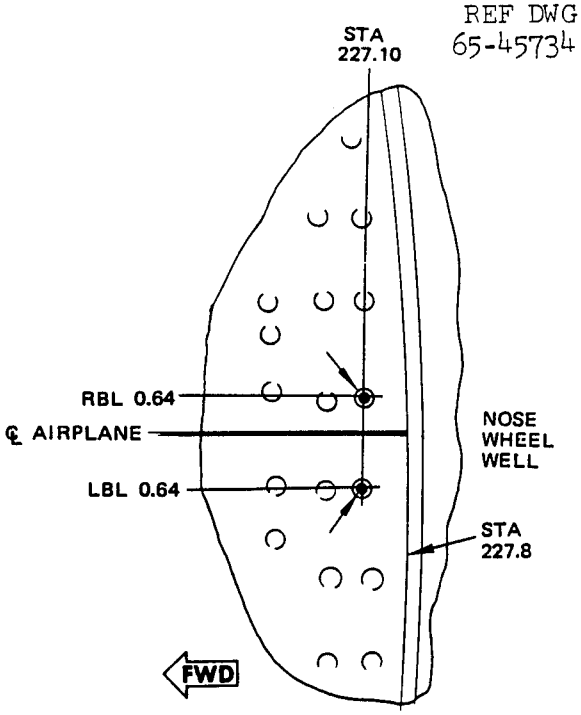

BOTTOM VIEW OF FUSELAGE
POINT "B"

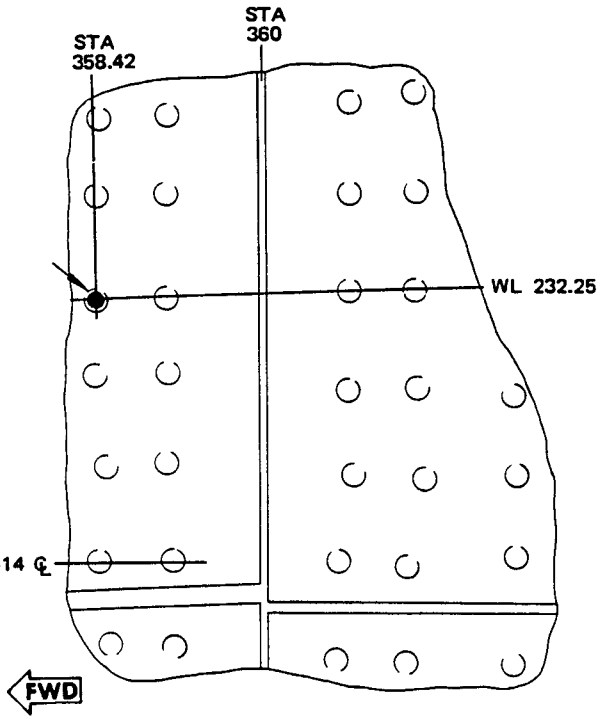

AFT OF FWD ENTRANCE DOOR
POINT "C"

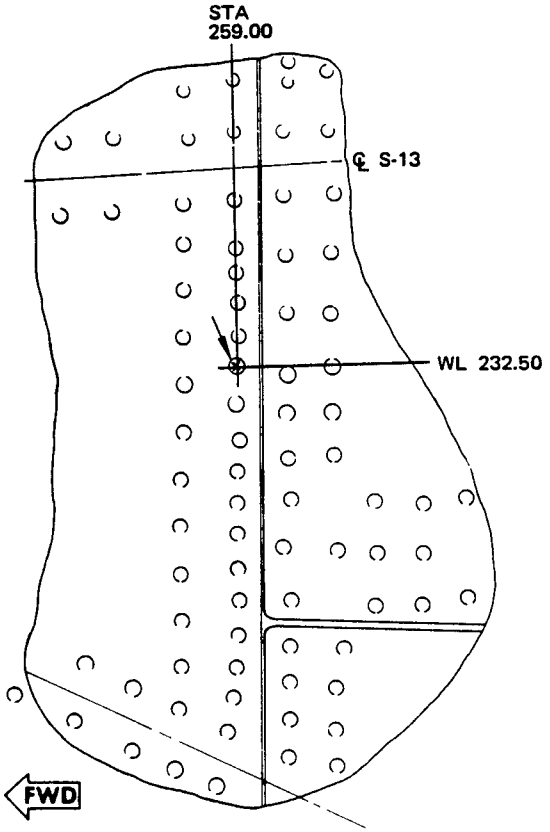

BELOW PILOTS AFT WINDOW
POINT "BB"

Alignment Points
Figure 15 (Sheet 1)

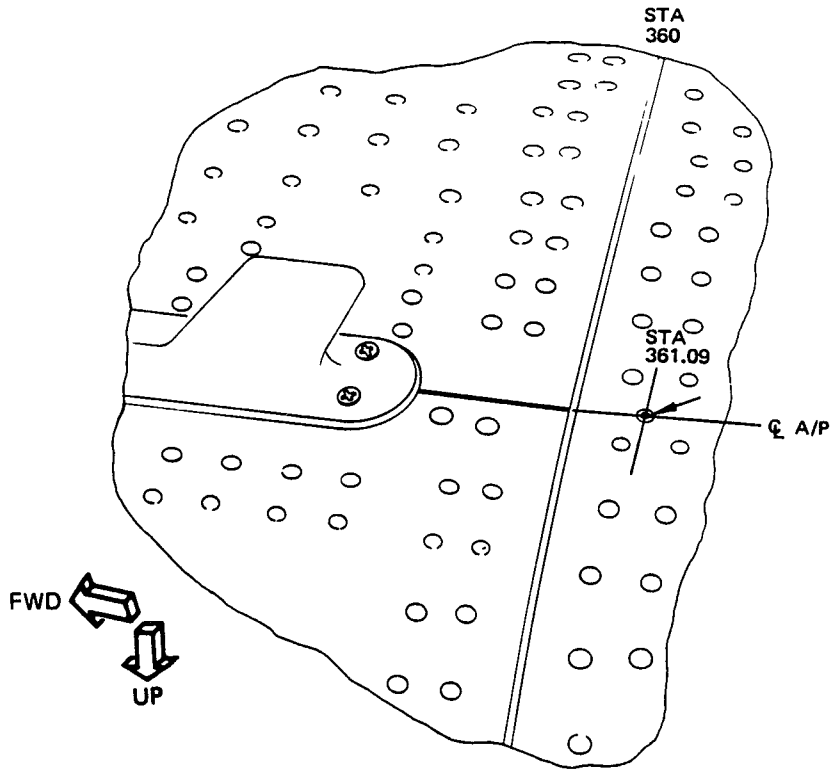

BOTTOM VIEW OF FUSELAGE
POINT "D"

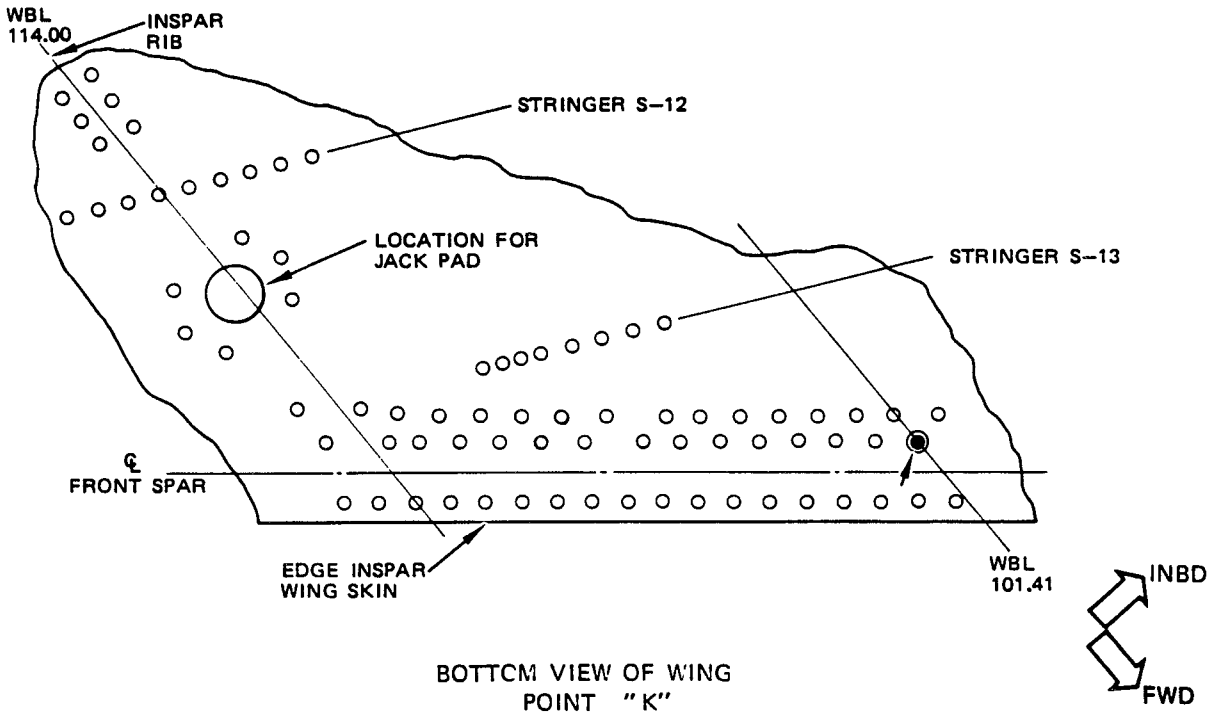

BOTTOM VIEW OF WING
POINT "K"

Alignment Points
Figure 15 (Sheet 2)

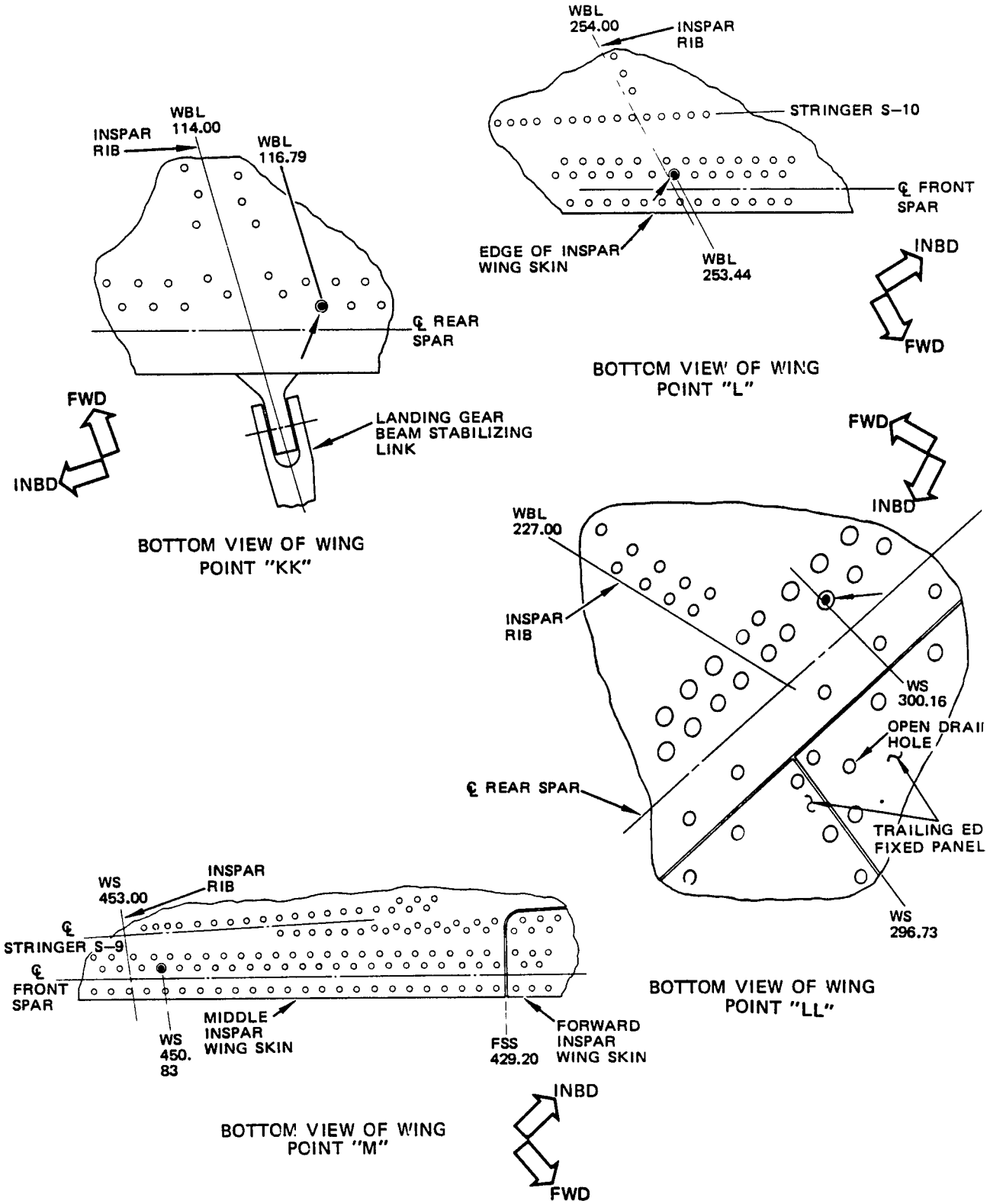

Alignment Points
Figure 15 (Sheet 3)

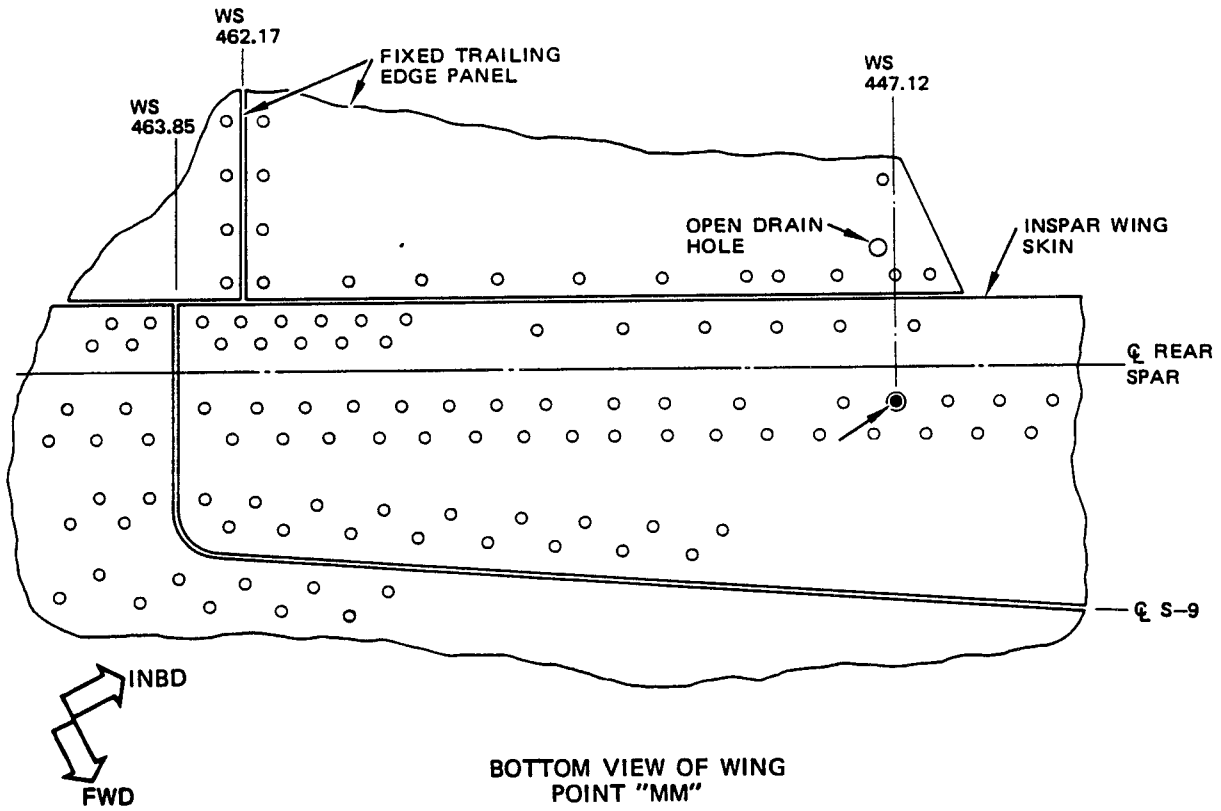

BOTTOM VIEW OF WING
POINT "MM"

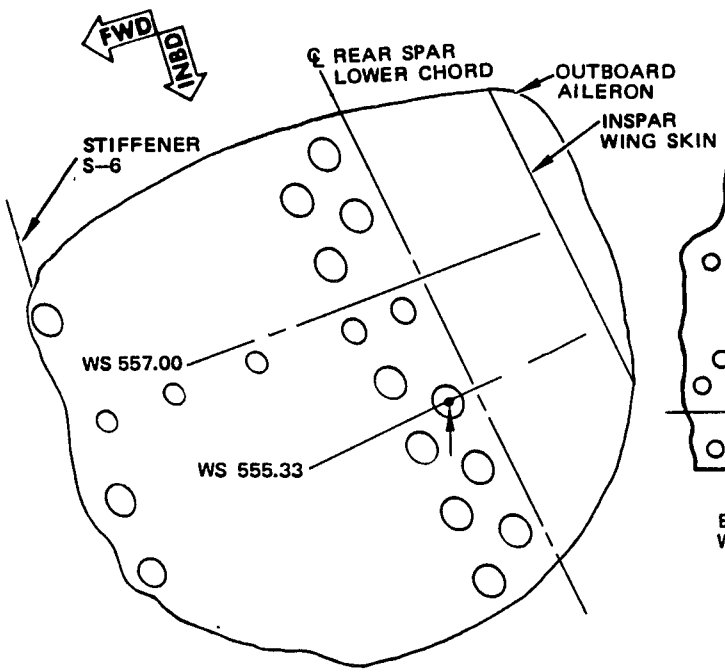

BOTTOM VIEW OF WING
POINT "NN"

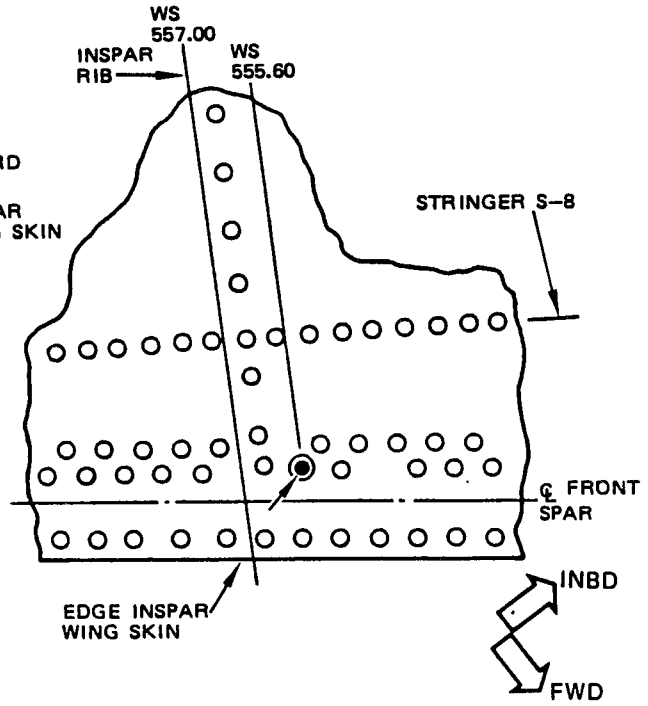

BOTTOM VIEW OF WING
POINT "N"

Alignment Points
Figure 15 (Sheet 4)

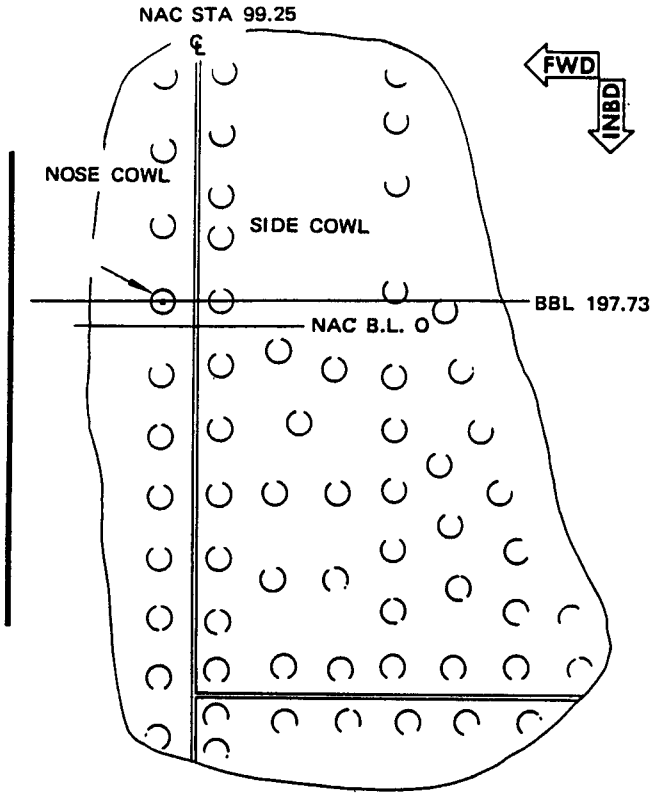

VIEW ON BOTTOM ON NO. 1 ENGINE COWL
POINT "S"

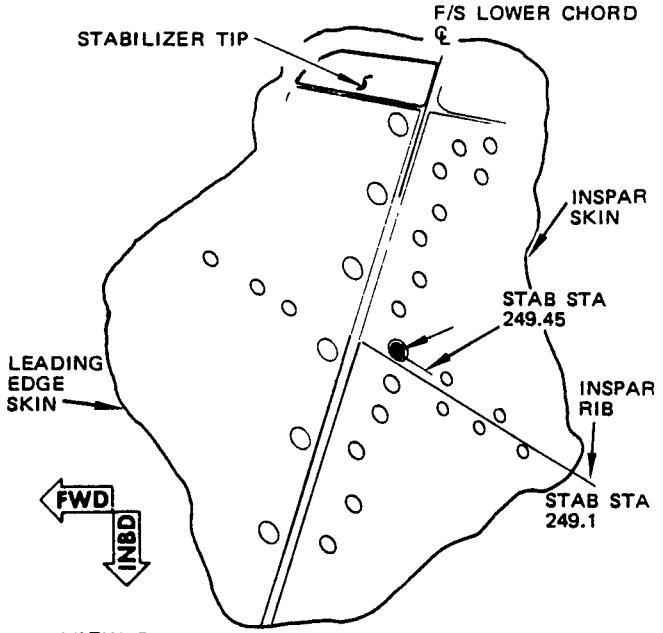

VIEW ON BOTTOM OF HORIZ STABILIZER
POINT "R"

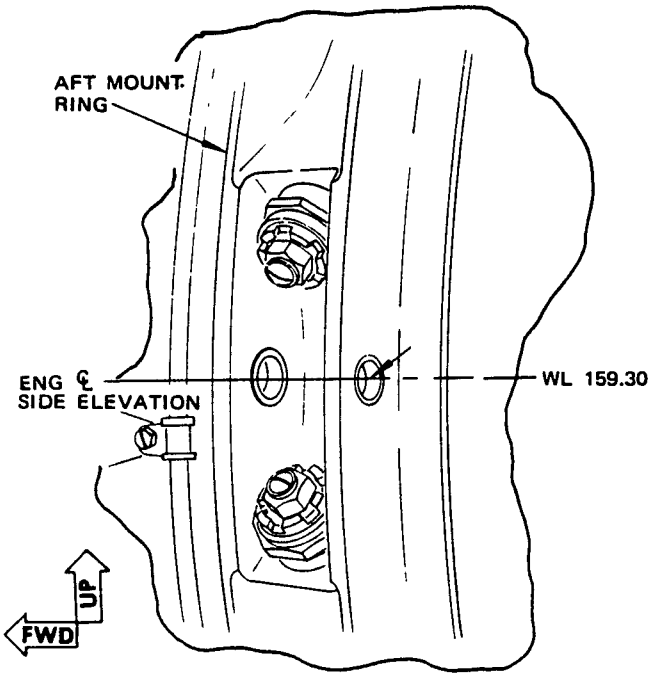

VIEW ON LEFT SIDE OF NO. 1 ENGINE
POINT "T"
REFER TO FIG. 16

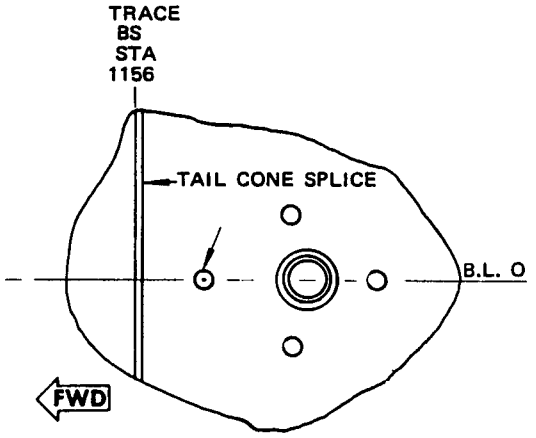

VIEW LOOKING UP ON TAIL CONE
POINT "Z"

Alignment Points
Figure 15 (Sheet 5)

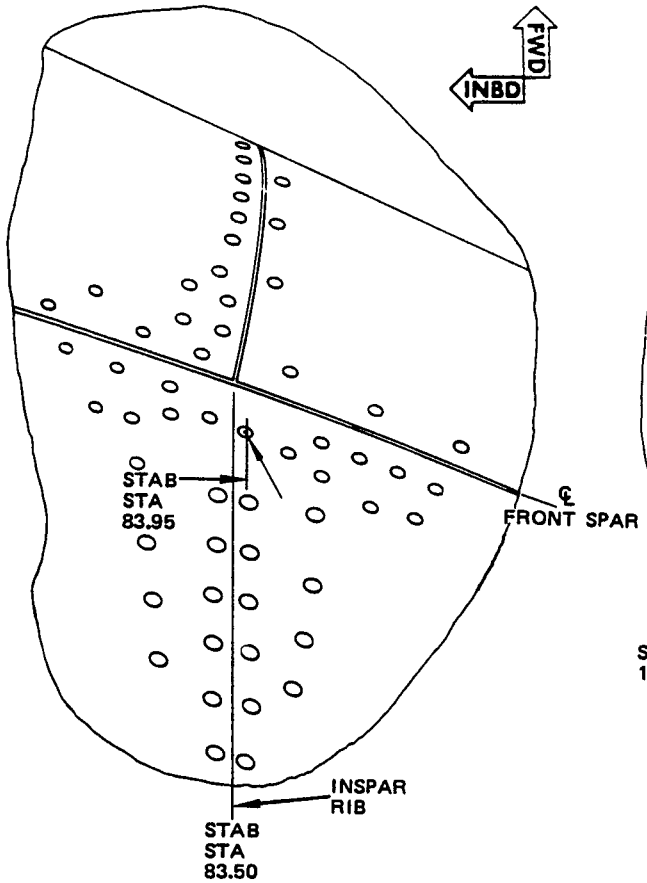

VIEW ON BOTTOM OF HORIZ STABILIZER
POINT "Q"

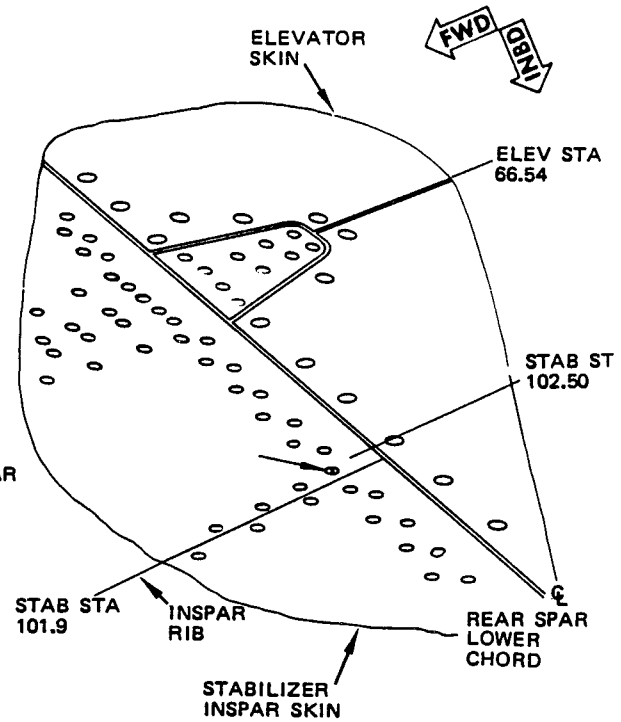

VIEW ON BOTTOM OF HORIZ STABILIZER
POINT "QQ"

Alignment Points
Figure 15 (Sheet 6)

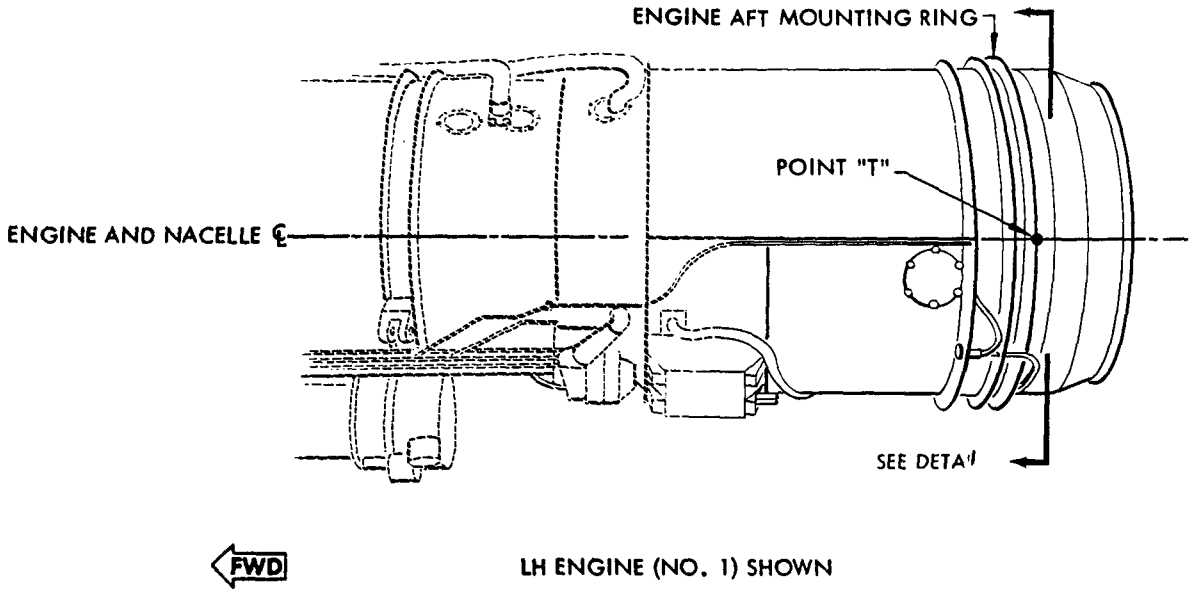

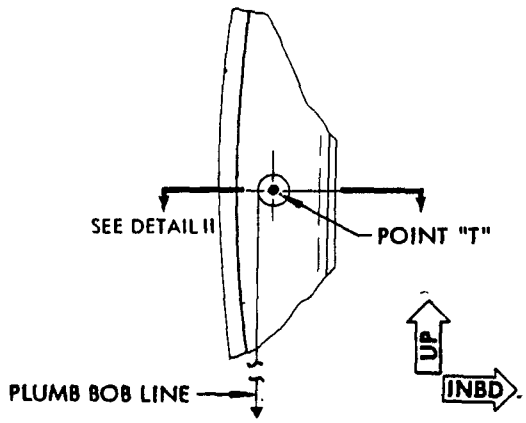

DETAIL I

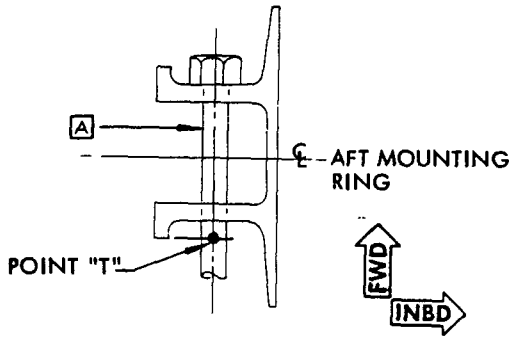

DETAIL II

NOTE

A USE A 9/16 INCH DIA BOLT THROUGH ENGINE RING FLANGES. PLACE PLUMB BOB LINES ON OUTBOARD EDGES OF BOLTS. DETERMINE BODY BUTTOCK LINE OF POINT "T" (CL HOLES) BY SUBTRACTING .28 INCH AS DETERMINED FROM PARAGRAPH 17 .

Engine Alignment Point
Figure 16

NOTE

1. ABOVE SHOWN DATA ARE FACTORY MEASUREMENTS AND VARIATIONS EXPERIENCED ON NEW AIRPLANES WITH ZERO FLIGHT TIME. THESE DATA ARE TO BE USED AS A GUIDE IN APPRAISING THE STRUCTURAL AND AERODYNAMIC CONDITION OF AN AIRPLANE AFTER MAJOR REPAIRS OR AFTER AN AIRPLANE HAS BEEN SUBJECTED TO MANEUVERS REQUIRING AN ALIGNMENT CHECK.

2. DISCREPANCIES FROM GIVEN VARIATIONS WILL NOT NECESSARILY INDICATE THAT THE AIRPLANE IS NON-AIRWORTHY. DISCREPANCIES MAY BE DUE TO NORMAL OR ABNORMAL SERVICE LOADS. THESE DISCREPANCIES MUST BE APPRAISED FROM THE STRUCTURAL AND AERODYNAMIC POINTS OF VIEW IN ORDER TO DETERMINE THEIR CAUSE AND THE EFFECT OF THESE CAUSES ON FLIGHT SAFETY.

3. THE CAUSES MAY BE DUE TO LOCALIZED OR NON-LOCALIZED PERMANENT SET IN THE STRUCTURE. A MISLOCATED ALIGNMENT POINT WILL RESULT IN A FALSE READING.

4. A RELATIVELY LARGE DISCREPANCY FROM GIVEN VARIATIONS DUE TO NON-LOCALIZED PERMANENT SET IN THE STRUCTURE WILL NOT AFFECT FLIGHT SAFETY PROVIDED THAT UPON VISUAL INSPECTION IT IS FOUND THAT THERE ARE NO
   A. LOCALIZED STRUCTURAL FAILURES SUCH AS:
      1. BUCKLED OR CRACKED SKINS, SPAR WEBS OR CHORDS, STIFFENERS, CASTINGS, FORGINGS OR MACHINED PARTS,
      2. LOOSE OR TILTED FASTENERS OR
      3. FASTENER FAILURE IN TENSION OR SHEAR.
   B. INDICATIONS OF STRUCTURAL FAILURES SUCH AS,
      1. FUEL LEAKS IN THE WING FUEL TANK AREA,
      2. AIR LEAKS IN BODY PRESSURIZED AREAS,
      3. PEELED-OFF PAINT,
      4. INTERFERENCE OF MOVING PARTS OF A MECHANISM,
      5. REFUSAL TO CLOSURE OF DOORS AND ACCESS PANELS DUE TO SURROUNDING STRUCTURE DISTORTION,
      6. HYDRAULIC FLUID LEAKS,
      7. FUEL LINE LEAKS,
      8. AIR DUCT OR PNEUMATIC LINE LEAKS,
      9. ELECTRIC CIRCUIT SHORTS OR
      10. REQUIRED EXCESSIVE CONTROL SURFACE TRIM LIMITING CONTROL RANGE.

5. FOR EXAMPLE, IF THE WING CHORD TWIST AS GIVEN BY L-LL, M-MM OR N-NN VALUES IS OUTSIDE GIVEN VARIATION VALUES, THE AIRPLANE IS AIRWORTHY PROVIDED IT CAN BE AERODYNAMICALLY TRIMMED WITHOUT LOSS OF PRESCRIBED CONTROL RANGE OR IF THE RESULTANT POWER AND RANGE LOSS IS ACCEPTABLE.

6. ON THE OTHER HAND A RELATIVELY SMALL DISCREPANCY FROM GIVEN VARIATIONS MAY BE DUE TO LOCALIZED PERMANENT SET IN THE STRUCTURE AS DESCRIBED IN PARAGRAPH 4. UNDER THESE CIRCUMSTANCES THE AIRPLANE IS NOT AIRWORTHY AND REQUIRES ATTENTION.

7. IN VIEW OF ABOVE CONSIDERATIONS IT IS OBVIOUS THAT IT IS IMPRACTICAL TO DEFINE THE PERMISSIBLE VARIATIONS IN TERMS OF MAXIMUM AMOUNT IN MINUTES (FOR AZIMUTH READINGS) OR MAXIMUM AMOUNT IN INCHES (FOR ELEVATION

Alignment Data
Figure 17 (Sheet 1 of 6)

OR DISTANCE READINGS). FOR EXAMPLE, A 2.00 DISCREPANCY FROM FACTORY VARIATION AT THE WING TIP ALIGNMENT POINTS N AND NN MAY BE ACCEPTABLE PROVIDED THERE ARE NO LOCALIZED STRUCTURAL FAILURES OR AERODYNAMIC AND/OR MECHANICAL MALFUNCTIONING. WHEREAS A 1.00 DISCREPANCY FROM FACTORY VARIATION OF SAME WING ALIGNMENT POINTS N AND NN MAY NOT BE ACCEPTABLE IF THERE ARE LOCALIZED FAILURES IN THE STRUCTURE, OR INDICATIONS OF LOCALIZED FAILURE OR AERODYNAMIC AND/OR MECHANICAL MALFUNCTIONING.

8. THE INSPECTION OF AN AIRPLANE AND THE APPRAISAL OF INSPECTION RESULTS UNDER SUCH CIRCUMSTANCES MUST BE PERFORMED BY A QUALIFIED STRUCTURAL AND/OR AERODYNAMICS ENGINEER.

A FINAL ELEVATION READING IS EQUAL TO SCALE READING PLUS EYE-PIECE ELEVATION (PER PARAGRAPH 10).

B INDICATE WHETHER TO THE LEFT OR RIGHT.

C FACTORY EXPERIENCED VARIATIONS APPLICABLE TO DIMENSIONS BETWEEN DIFFERENT AIRPLANES OF SAME MODEL.

D FACTORY EXPERIENCED VARIATIONS APPLICABLE TO SYMMETRICAL L.H. AND R.H. DIMENSIONS OF SAME AIRPLANE.

E SEE CORRESPONDING FIGURES ON 737-200 AIRPLANE.

EFFECTIVITY

737-100 AIRPLANE

STRUCTURAL SECTION	POINT OR DIMENSION	ELEVATION (DEFLECTED) [A]			AZIMUTH			DISTANCE		
		AVERAGE	VARIATION		COMPUTED	VARIATION				
			[C]	[D]		[C]	[D]		[C]	[D]
WING	K	177.46		.02 .00	9°-44'					
	KK(INDEX)	179.38		.02 .00	13°-38'					
	L	196.80	+.09 -.18	.27 .06	26°-54'					
	LL	192.49	+.09 -.08	.13 .00	27°-04'					
	L-LL	4.31	+.17 -.14	.13 .07	-					
	M	208.92	+.24 -.20	.44 .01	41°-39'					
	MM	[E]			42°-42'					
	M-MM	[E]			-					
	N	217.42	+.22 -.19	.41 .01	51°-20'					
	NN	215.78	+.26 -.66	.56 .03	52°-28'					
	N-NN	1.63	+.88 -.29	.97 .04	-					
EMPENNAGE	Q	275.22	+.39 -.29	.16 .04	53°-43'					
	QQ	273.01	+.71 -.47	.18 .02	92°-54'					
	R	295.45	+.32 -.40	.37 .09	101°-25'					
	TOP OF RUDDER FAIRING	-	-	-	0°-00'					

Alignment Data
Figure 17 (Sheet 3 of 6)

STRUCTURAL SECTION	POINT OR DIMENSION	ELEVATION (DEFLECTED) [A]			AZIMUTH			DISTANCE		
		AVERAGE	VARIATION [C]	VARIATION [D]	COMPUTED	VARIATION [C]	VARIATION [D]	AVERAGE	VARIATION [C]	VARIATION [D]
BODY	A	174.65	+.10 -.10	-	0°-00'					
	B	158.29	+.10 -.07	-						
	BB (INDEX)	232.50	-	.02 .00						
	D				0°-00'					
	Z	230.25	+.54 -.37	-	0°-00'					
NOSE LANDING GEAR	OLEO CL				0°-00'					
	"a"									
	"b"									
MAIN LANDING GEAR	"CL"									
	"CR"									
	"DL"									
	"DR"									
NACELLE AND ENGINE	T	159.05	+.05 -.10	.24 .03				215.18	+.38 -.23	.15 .06
	S	[E]						[E]		

EFFECTIVITY

-200 AIRPLANES

STRUCTURAL SECTION	POINT OR DIMENSION	ELEVATION (DEFLECTED) [A]			AZIMUTH			DISTANCE		
		AVERAGE	VARIATION [C]	VARIATION [D]	COMPUTED	VARIATION [C]	VARIATION [D]	AVERAGE	VARIATION [C]	VARIATION [D]
WING	K	177.46		0.02 0.00	9°-11'					
	KK(INDEX)	179.38		0.02 0.00	12°-37'	+2' -2'	4' 0			
	L	196.87	+0.47 -0.60	0.75 0.03	25°-9'	+2' -7'	8' 0			
	LL	192.45	+0.44 -0.68	0.77 0.03	25°-8'	+11' -1'	11' 0			
	L-LL	4.32	+0.14 -0.20	0.11 0.01						
	M	209.06	+0.41 -0.25	0.19 0.00	39°-8'	+3' -1'	3' 0			
	MM	206.27	+0.43 -0.30	0.24 0.01	39°-59'	+2' -1'	3' 0			
	M-MM	2.81	+0.08 -0.08	0.12 0.00						
	N	217.62	+0.42 -0.37	0.33 0.01						
	NN	216.09	+0.50 -0.40	0.16 0.01						
EMPENNAGE	N-NN	1.52	+0.30 -0.14	0.26 0.03						
	Q	275.28	+1.08 -0.75	0.18 0.01	53°-43'	+11' -6'	9' 1'			
	QQ	272.95	+1.28 -0.80	0.40 0.01	93°-00'	+15' -14'	23' 0			
	R	295.37	+1.20 -0.56	0.74 0.00	101°-27'	+6' -7'	12' 0			
	TOP OF RUDDER FAIRING				0°-00'	3' [B]				

Alignment Data
Figure 17 (Sheet 5 of 6)

STRUCTURAL SECTION	POINT OR DIMENSION	ELEVATION (DEFLECTED) [A]			AZIMUTH			DISTANCE		
		AVERAGE	VARIATION [C]	VARIATION [D]	COMPUTED	VARIATION [C]	VARIATION [D]	AVERAGE	VARIATION [C]	VARIATION [D]
BODY	A	174.82	+0.39 -0.17		0°-00'					
	B	158.44	+0.42 -0.17							
	BB INDEX	232.50	+0.02 -0.02							
	D	148.61	+0.40 -0.14		0°-00'					
	Z	230.19	+0.83 -0.72		0°-00'					
NOSE LANDING GEAR	OLEO CL				0°-00'					
	"a"							80.77	+0.48 -0.46	-
	"o"							53.17	+0.33 -0.30	-
MAIN LANDING GEAR	"CL							511.42	+0.38 -0.22	-
	"CR"							511.48	+0.32 -0.34	-
	"DL							101.74	+0.21 -0.30	0.44
	"DR"							101.72	+0.28 -0.27	0.01
NACELLE AND ENGINE	T	159.13	+0.50 -0.73	0.71 0.04				215.19	+0.61 -0.28	0.63 0.00
	S	131.69	+0.51 -0.61	0.36 0.02				197.68	+0.32 -0.63	0.27 0.05

Alignment Data
Figure 17 (Sheet 6 of 6)

AERODYNAMIC SMOOTHNESS

1. General

A. The 737 airplane requires aerodynamically clean shape and smooth exterior for high performance. Unrepaired damage, unfilled dents (51-40-1) or repairs which change the shape or roughen the surface will be reflected in reduced performance. Every effort should be made to maintain original contour and exterior surface smoothness.

B. Exterior surface aerodynamic smoothness is classified in three categories: critical, semicritical and noncritical (Fig. 1).

(1) Critical and semicritical aerodynamic surfaces are those surfaces which require a high degree of aerodynamic smoothness. Figure 1 illustrates the critical surfaces as follows:

(a) Fuselage nose to fuselage station 664

(b) Wing upper and lower surfaces from leading edge to rear spar centerline

(c) Nose cowl leading edge to nacelle station 83.50

(d) Pylon leading edge to nacelle station 127.90

(e) Vertical stabilizer, LH and RH surfaces, from leading edge to centerline of rear spar

(f) Horizontal stabilizer, upper and lower surfaces, from leading edge to centerline of rear spar

(2) Protect the finish from scuffing, scratches and other damage on the critical upper surfaces by wearing soft soled shoes and by covering the areas adjacent to the work area. Refer to 51-21-0 of the Maintenance Manual for finish requirements. Repair all scuffed or damaged finish as soon as possible.

(3) Skin repairs in the regions of critical aerodynamic smoothness should be of the flush type to maintain optimum performance; but external repairs may be used providing the limitations in the regions of the static pressure ports are observed (Fig. 5 and 8).

C. The noncritical areas are considered as all other exterior surfaces of the airplane. The smoothness criteria that apply to flush and external repairs in the various areas of the airplane are illustrated in Fig. 1.

D. Refer to SRM 51-70-3 if the airplane is approved for Reduced Vertical Separatim Minimum (RVSM) operation and has damage near the pitot-static probes.

2. Joints - Critical Areas

A. Skin joints are flush in the critical areas. Lap joints are permitted in the fuselage provided they are parallel to the airstream. All other skin joints in the critical areas are butt joints. Maintain close tolerance control on fastener head flushness. Use aerodynamic smoother, BMS 5-79 according to 51-30 of the Maintenance Manual to fill and fair window to fuselage skin gaps, wing skin gaps and nonremovable bolts and screws in critical areas.

3. Joints - Noncritical Areas

A. In noncritical areas no special consideration is given to aerodynamic smoothness; however at all upper trailing edge joints, except around access panels, apply aerodynamic smoother. Chordwise lap joints are allowed aft of the wing rear spar and on control surfaces. Fastener flushness tolerances are greater in noncritical areas. No filler is required on skin joints, screws and bolt heads.

4. Aerodynamic Smoothness Requirements

A. Fuselage

(1) See Fig. 5 for details of smoothness requirements of fuselage.

B. Empennage

(1) See Fig. 6 for details of smoothness requirements of empennage.

C. Wing

(1) See Fig. 6 for details of smoothness requirements of wing.

D. Nacelle and Fairing

(1) See Fig. 7 for details of smoothness requirements of nacelle and fairing.

5. Microshaving of Aluminum Alloy Rivets

A. A rivet microshaver shown in Fig. 2 is used to shave aluminum alloy rivets to meet surface flushness requirements. The microshaver is a pistol-grip air motor with an adjustable microstop. A cutter shaves the rivet head to within .002 inch of the sheet surface. Spring-loaded rubber feet mounted in a free turning stabilizer, prevent slipping of the cutter.

B. When shaving rivets, the following practices must be observed in order to maintain rivet strength.

(1) Head protrusion shall not exceed "H" Table 1 after driving and prior to shaving.

(2) Head diameter shall not be less than "D" Table 1, after shaving.

(3) Select a cutter larger in diameter than the rivet head. See Table 2 for recommended cutter diameters.

(4) Adjust the stop of shaver to extend .001 in. to .002 in. beyond the cutter and test this setting on scrap stock prior to use, to avoid damaging sheet surface.

(5) Use steady pressure on the tool to obtain a constant speed.

(6) Rock the shaver lightly on contoured surface to trim all edges of the rivet.

(7) Refinish the shaved rivet heads per 51-10-2 where external surfaces are painted.

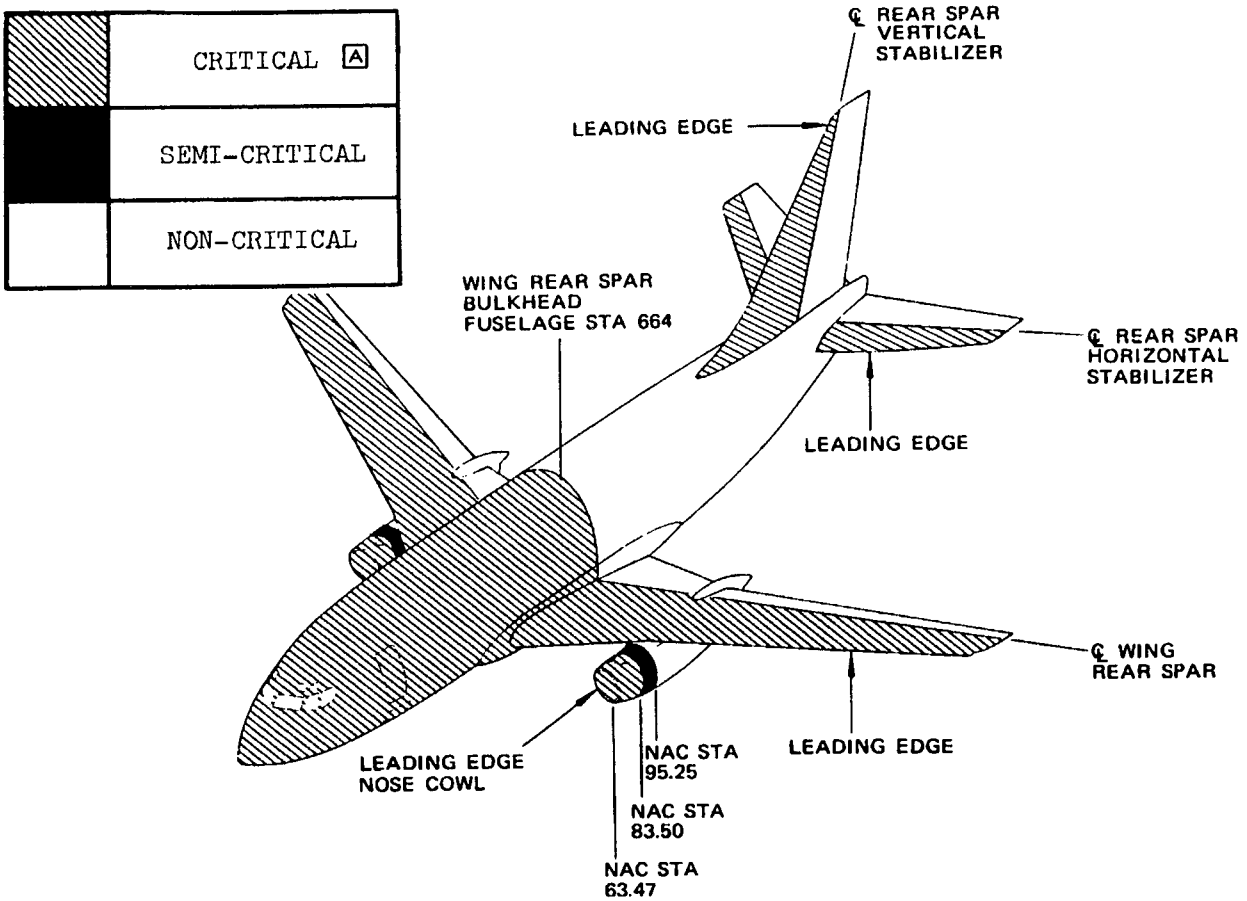

NOTES

- FOR OPTIMUM PERFORMANCE, REPLACE AN EXTERNAL REPAIR WITH A FLUSH REPAIR IN A REGION OF AERODYNAMIC SMOOTHNESS.
- SEE FIG. 5 AND 8 FOR LIMITATIONS ON REPAIRS IN REGION OF STATIC PRESSURE PORTS.
- REFER TO SRM 51-70-3 FOR AIRPLANES THAT ARE APPROVED FOR OPERATION IN REDUCED VERTICAL SEPARATION MINIMUM (RVSM) AIRSPACE.

CAUTION: SOFT SOLED SHOES OR RUBBER OVERSHOES MUST BE WORN WHEN WORKING OR WALKING IN CRITICAL AREAS TO PREVENT SCUFFING OR DAMAGE TO SKIN.

A HIGH DEGREE OF AERODYNAMIC SMOOTHNESS REQUIRED.

B EDGE MARGIN (EM) PER FIG. 1. CHAPTER 51-30-6 FOR 100° COUNTERSUNK FASTENER IN SINGLE SHEAR.

C FOR AN EXTERNAL REPAIR TO A CUTOUT FOR A DOOR, DO NOT CHAMFER THE EDGE OF THE PATCH THAT IS ALONG THE CUTOUT FOR THE DOOR.

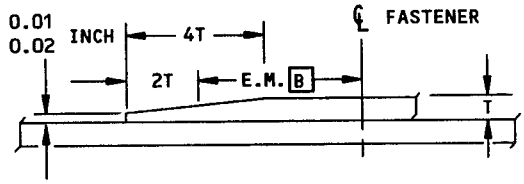

CHAMFERED EXTERNAL PATCH

Aerodynamic Smoothness - Critical Areas
Figure 1

G68564

RIVET HEAD SHAVING DIMENSIONS					
RIVET DIA	BEFORE SHAVING		AFTER SHAVING		
	H MAX		MINIMUM DIAMETER D		
			STD CSK	OPT CSK	STD CSK
	82°	100°	82°	82°	100°
1/8	.009	.007	.210	.192	.204
5/32	.011	.009	.248	.235	.262
3/16	.013	.010	.331	.285	.326
1/4	.015	.012	.438	.375	.443
5/16	.018	.014	.546	.465	.526
3/8	.021	.016	.654	.570	.650

TABLE I

MICROSHAVER CUTTER DIMENSIONS	
RIVET DIA	CUTTER DIA
1/8	.375
5/32	.500
3/16	.500
1/4	.625
5/16	.750
3/8	1.00

TABLE II

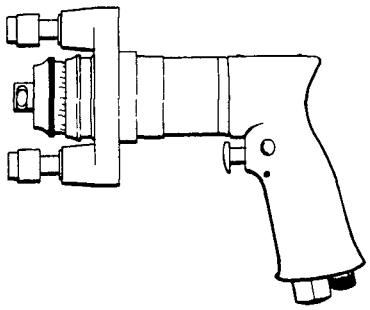

MICROSHAVER

MICROSHAVER MODEL	MANUFACTURER
ZT306 ZT405 ZT208 (ELECTRIC)	Zephyr Manufacturing Co. Englewood, California
TD-300-OAD TD-300A-OAID TD-300-OAID	Ingersoll Co. New York, N.Y.
AT-429	Aircraft Tools Co. Los Angeles, California

Microshaving of Aluminum Alloy Rivets
Figure 2 (Sheet 1 of 2)

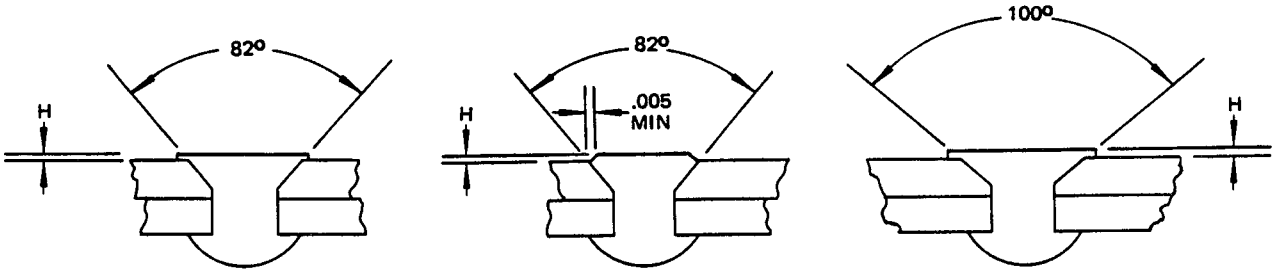

STANDARD COUNTERSINK
BEFORE RIVET SHAVING

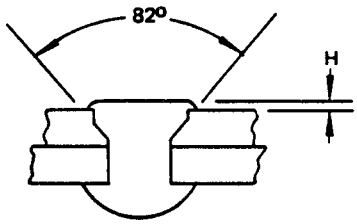

OPTIONAL COUNTERSINK
BEFORE RIVET SHAVING

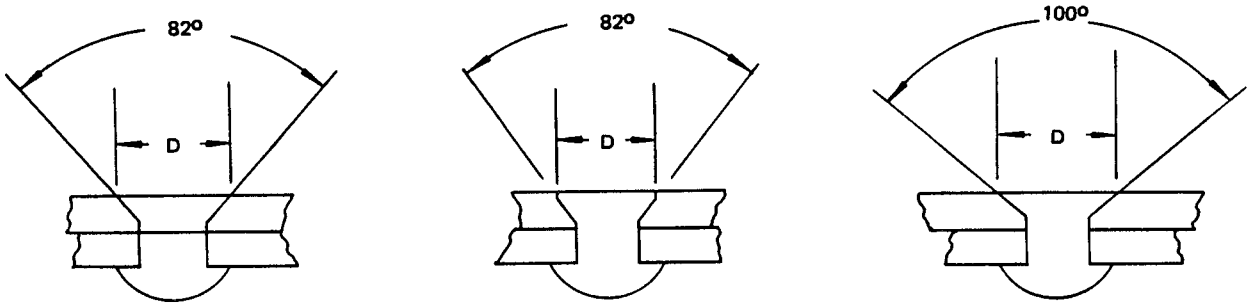

STANDARD COUNTERSINK

OPTIONAL COUNTERSINK

STANDARD COUNTERSINK

AFTER RIVET SHAVING

Microshaving of Aluminum Alloy Rivets
Figure 2 (Sheet 2 of 2)

A. Fastener Tolerances for Flush Shear Head Rivets

NOTE: In all areas, height measurements for all fasteners are made from the structural aerodynamic surface to the highest point on the fastener head.

(1) In CRITICAL areas of the Wing, Empennage, and Nacelle - Strut, the tolerances will be:

- 90% = +0.001 to +0.004
- 10% = +0.0005 to +0.006
- All others will be shaved flush +0.001 to +0.003

(2) In NON-CRITICAL areas of the Wing, Empennage, and Nacelle - Strut, the tolerances will be:

- 90% = +0.001 to +0.005
- 10% = +0.001 to +0.007
- All others will be driven flush within -0.002 to +0.007 and may be shaved flush +0.001 to +0.003

NOTE: Micro shaving is not permitted for reduced shear head rivets such as BACR15CE, BACR15GF or BACR15FV (as given in BAC5004-1).

There is no differentiation between hand-installed and machine-installed rivets.

B. Fastener Tolerances for Hex-Drive Bolts and Lockbolts

(1) Fastener flushness for BACB30WQ bolts +0.0055 ±0.003

(2) In EXTRA-CRITICAL areas of the Wing, Empennage, and Nacelle - Strut, the tolerances will be:

- 90% flat-head Hex-Drive and Lockbolts flush within = ±0.003
- 10% flat-head bolts = -0.005 to +0.003
- Dome-head Hex-Drive bolts and Lockbolts flush within +0.0025 - 0.002/+0.003.

(3) In CRITICAL areas of the Wing, Empennage, and Nacelle - Strut, the tolerances will be:

- 90% flat-head Hex-Drive and Lockbolts flush within = ±0.003
- 10% flat-head bolts = -0.005 to +0.003
- Dome-head 5/32 (-5) and 3/16 (-6) Hex-Drive Bolts and Lockbolts flush within +0.0045 ±0.003.
- Dome-head 1/4 (-8), 5/16 (-10) Hex-Drive Bolts and Lockbolts flush within +0.0055 ±0.003.

Aerodynamic Smoothness - Fasteners
Figure 3 (Sheet 1)

BOEING PROPRIETARY - Copyright © - Unpublished Work - See title page for details.

B. Fastener Tolerances for Hex-Drive Bolts and Lockbolts (Continued)

(4) In NON-CRITICAL areas of the Wing, Empennage, and Nacelle-Strut, the tolerances will be:

- All flat-head Hex-Drive and Lockbolts flush within +0.0045 ±0.003
- Dome-head 5/32 (-5) and 3/16 (-6) Hex-Drive Bolts and Lockbolts flush within +0.0045 ±0.003
- Dome-head 1/4 (-8), 5/16 (-10) Hex Drive Bolts and Lockbolts flush within +0.055 ±0.003

C. Fastener Flushness Tolerances for CRITICAL and NON-CRITICAL Areas of the Fuselage for CE, GF and FV Type Rivets are as follows:

- A minimum of 90% flush within +0.001 to +0.006
- A maximum of 10% may be flush within +0.0061 to +0.008

NOTE: There is no differentiation between hand-installed and machine-installed rivets.

Aerodynamic Smoothness - Fasteners
Figure 3 (Sheet 2)

BOEING PROPRIETARY - Copyright © - Unpublished Work - See title page for details.

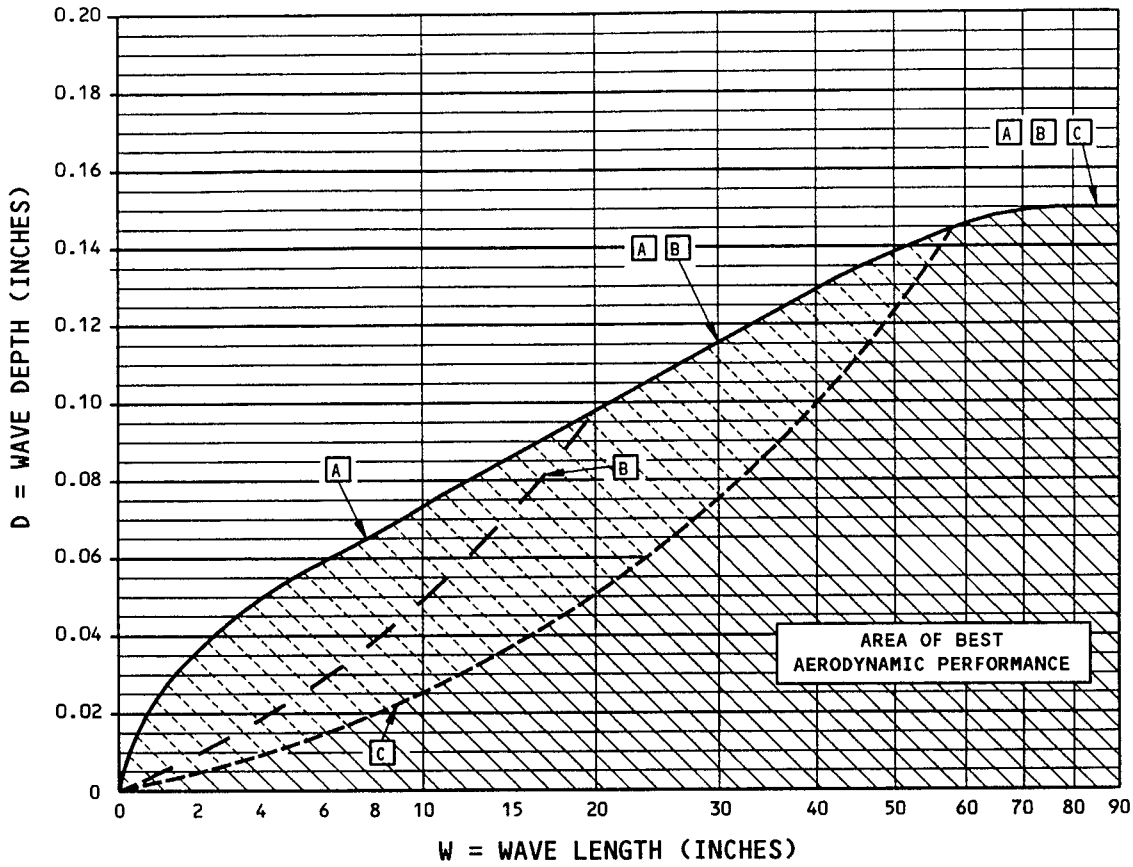

CHART I

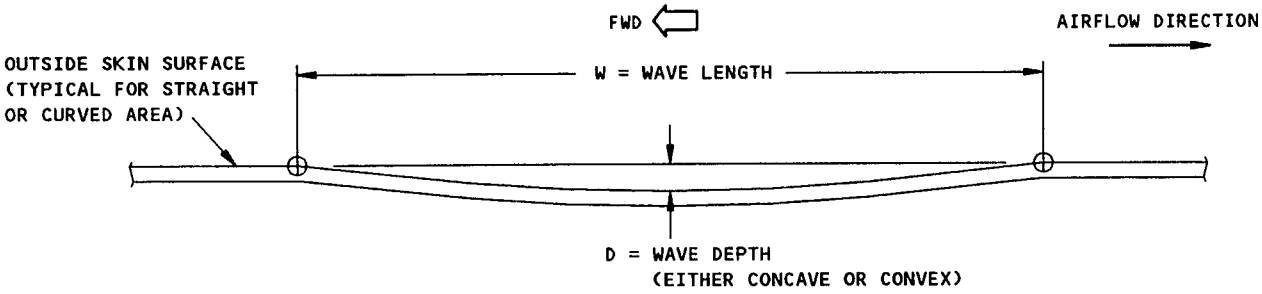

SKIN WAVINESS

Aerodynamic Smoothness - Waviness
Figure 4 (Sheet 1)

NOTES

- AT ALL FASTENERS, A 1.0 MAX DIAMETER DISH WITH A MAX DEPTH OF 0.003 IN CRITICAL AREAS (0.005 IN NON CRITICAL AREAS) IS PERMISSIBLE WHICH MAY BE ADDED TO WAVINESS

[A] CURVE ALSO APPLIES TO THE CROWN SKIN AREA OF SECTION 43 (ABOVE THE WINDOW BELT) WHEN HEAT DEPRESSIONS DUE TO DIRECT EXPOSURE TO SUNLIGHT ARE NOT PRESENT

[B] FOR WING AND STABILIZERS AFT OF REAR SPAR (NON CRITICAL D/W < 0.005)

[C] FOR WING AND STABILIZERS FORWARD OF REAR SPAR, RUDDER, AILERON, AND ELEVATOR (CRITICAL D/W < 0.0025)

Aerodynamic Smoothness - Waviness
Figure 4 (Sheet 2)

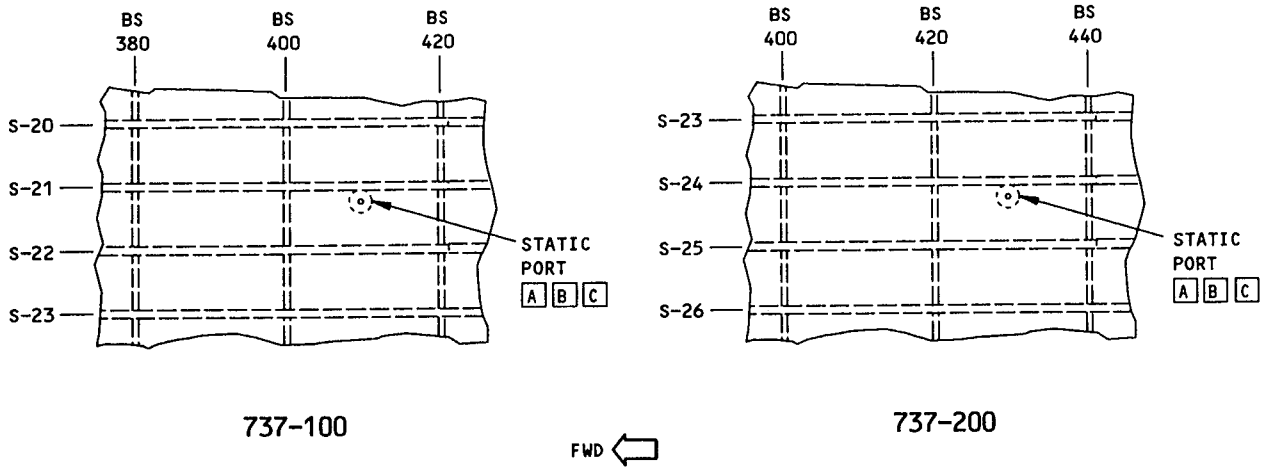

LOWER FUSELAGE SKIN
LEFT SIDE SHOWN
RIGHT SIDE OPPOSITE

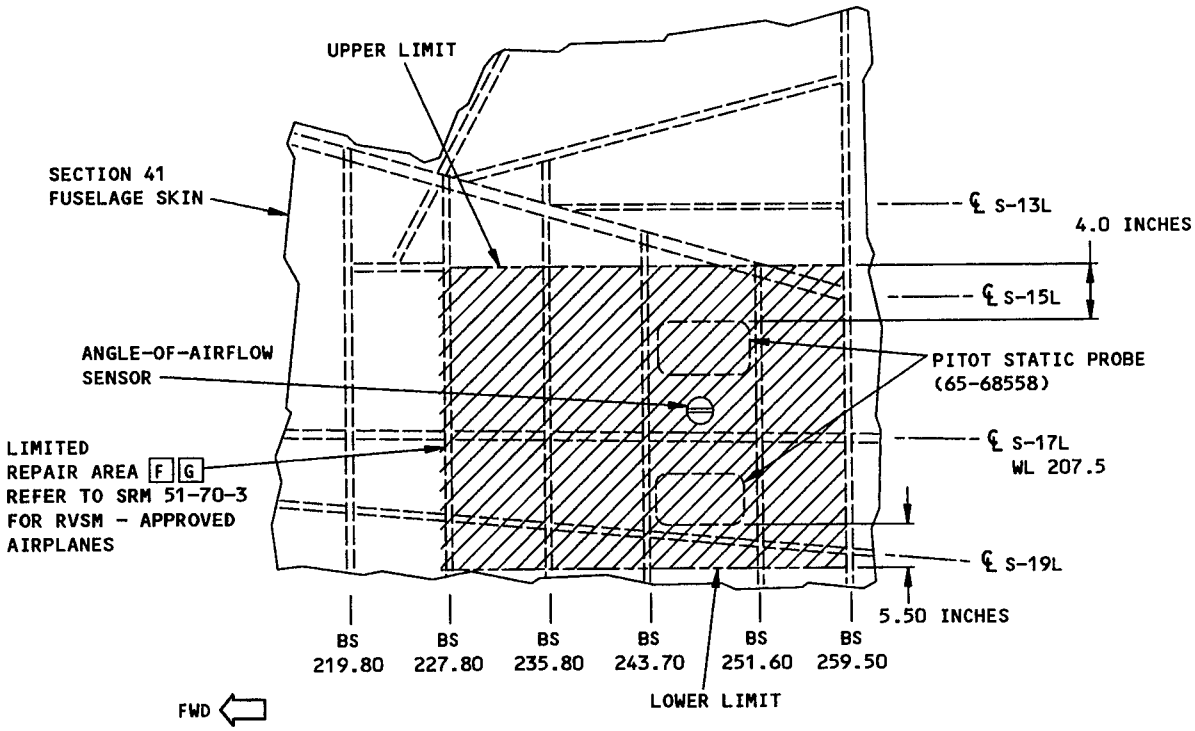

SIDE VIEW - FUSELAGE
LEFT SIDE SHOWN
RIGHT SIDE OPPOSITE

Aerodynamic Smoothness - Fuselage
Figure 5 (Sheet 1)

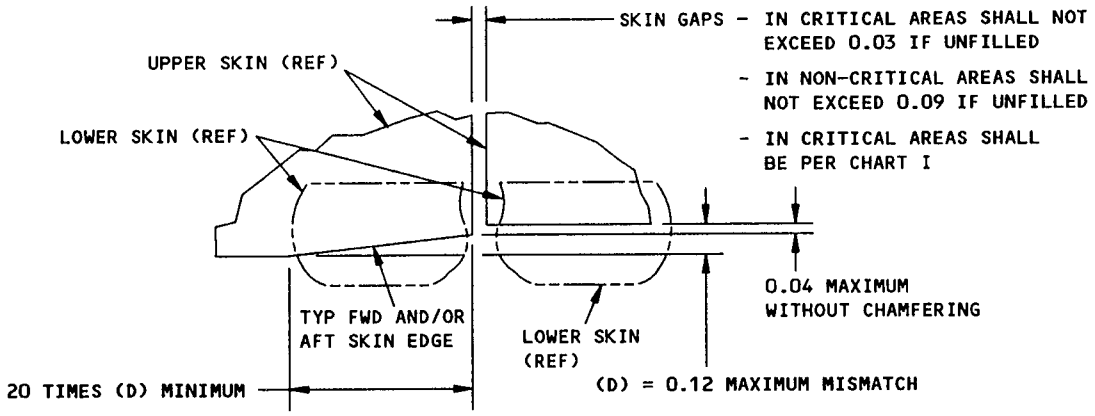

PERMISSIBLE MISMATCH AND GAP OF SKIN EDGES AT LAP JOINTS

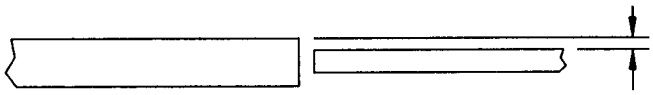

MAXIMUM PERMISSIBLE MISMATCH

- 0.02 FORWARD OF BS 530 EXCEPT AT BS 360 WHERE NOT MORE THAN 10% (47 INCHES TOTAL) IN CONTINUOUS LENGTHS LESS THAN 12 INCHES MAY EXCEED THIS LIMIT UP TO 0.04 MAX
- 0.03 BETWEEN BS 530 AND BS 1012
- 0.04 AFT OF BS 1012, EXCEPT AT BS 1016 WHERE NOT MORE THAN 10% (36 INCHES TOTAL) IN CONTINUOUS LENGTHS LESS THAN 12 INCHES MAY BE BETWEEN 0.08 AND 0.12
- 0.062 AT BS 540 AT OUTER SKIN OF LAP JOINTS. MAX WIDTH OF MISMATCH 3.75 MEASURED UPWARDS FROM STRINGER CENTERLINE

PERMISSIBLE MISMATCH AT SKIN BUTT JOINTS

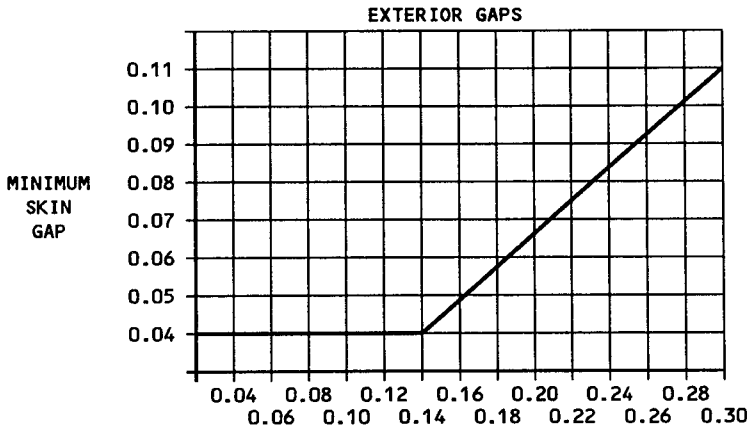

GAP CLEARANCE/DEPTH RATIO IS REQUIRED TO PROVIDE ADEQUATE ADHESION FOR SEALANT

GAP DEPTH
CHART I

Aerodynamic Smoothness - Fuselage
Figure 5 (Sheet 2)

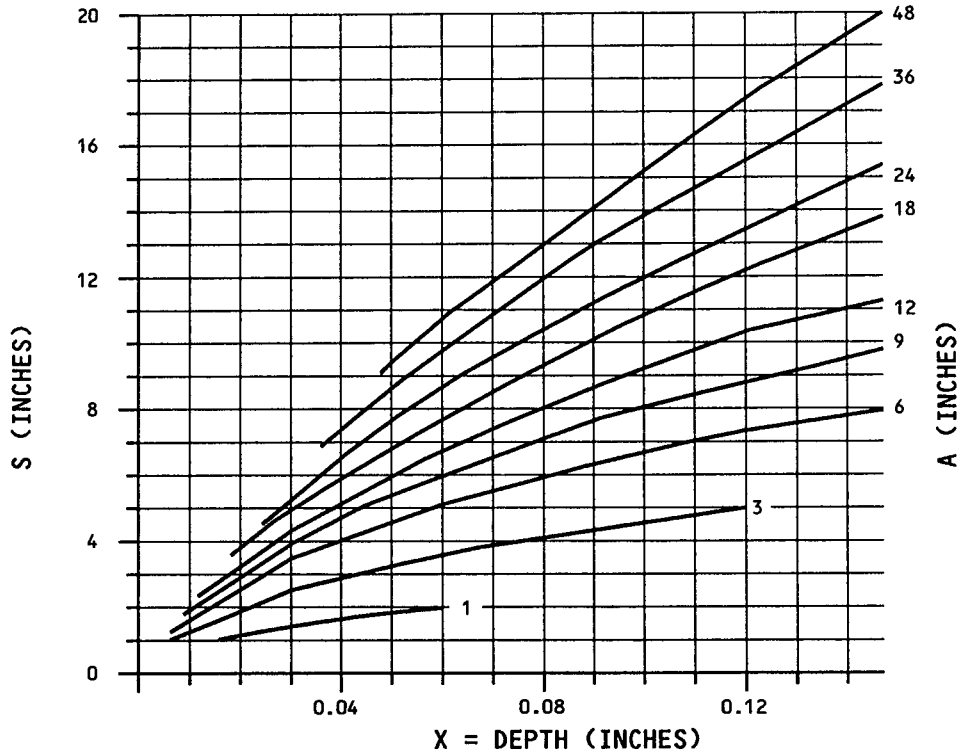

LIMITS ON SURFACE IRREGULARITIES NEAR STATIC PORTS, PITOT STATIC PROBES, AND ANGLE OF AIRFLOW SENSORS
CHART II [E] [H]

A = LARGEST DIMENSION OF IRREGULARITY (DIAMETER, MAJOR AXIS OR DIAGONAL DEPENDING ON SHAPE)

X = MAXIMUM DEPTH OR HEIGHT OF THE IRREGULARITY

S = DISTANCE FROM THE STATIC PRESSURE PORT TO THE NEAREST EDGE OF THE IRREGULARITY (I.E, TO THE POINT WHERE DEVIATION FROM NORMAL CONTOUR BEGINS). [D]

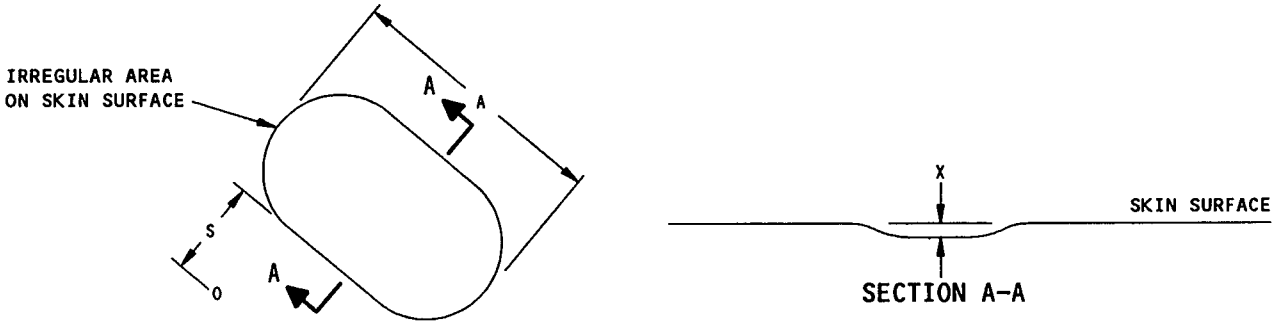

STATIC PORT PITOT STATIC PROBE
ANGLE OF AIRFLOW SENSOR

Aerodynamic Smoothness - Fuselage
Figure 5 (Sheet 3)

NOTES

- DO NOT SHAVE NON METALLIC HONEYCOMB OR LAMINATED PANELS

[A] THE SKIN CONTOUR AND STATIC PRESSURE PORT WITHIN A 3-INCH RADIUS OF THE PORT CENTER-LINE MUST NOT EXCEED A WAVE DEPTH OF 0.010 INCH. SKIN WAVES MAY BE DETECTED BY PLACING THE EDGE OF A 6-INCH STEEL RULE ACROSS THE CENTER OF THE STATIC PRESSURE PORT IN THE FWD-AFT DIRECTION. IF ANY SKIN WAVES EXIST, THEY WILL APPEAR AS GAPS BETWEEN THE EDGE OF THE STEEL RULE AND SKIN

[B] EXTERNAL REPAIRS ARE LIMITED AROUND THE STATIC PORT AREA. SEE FIGURE 8

[C] RIVETS WITHIN A 3-INCH RADIUS OF THE STATIC PRESSURE PORTS MUST BE FLUSH WITH SKIN SURFACE WITHIN A TOLERANCE OF 0.0 TO 0.003 HIGH

[D] THE DISTANCE "S" APPLIES REGARDLESS OF THE DIRECTION OF THE IRREGULARITY FROM THE STATIC PRESSURE PORT

[E] THESE LIMITS RELATE ONLY TO AERODYNAMIC EFFECTS ON THE STATIC PRESSURE PORTS, PITOT STATIC PROBES, AND ANGLE OF AIRFLOW SENSORS. ANY APPLICABLE STRUCTURAL RESTRICTIONS ON DENTS MUST ALSO BE MET. AN ACCUMULATION OF IRREGULARITIES WHICH MAY BE INDIVIDUALLY ACCEPTABLE CAN HAVE AN ADDITIVE EFFECT AND SHOULD BE AVOIDED

[F] FOR EXTERNAL REPAIRS IN OR NEAR THE LIMITED REPAIR AREA, SEE FIGURE 9

[G] FOR OPERATION IN REDUCED VERTICAL SEPARATION MINIMUM (RVSM) AIRSPACE, THE AIRPLANE CANNOT HAVE MORE THAN TWO REPAIRS IN THE LIMITED REPAIR AREA BECAUSE OF THE AERODYNAMIC EFFECTS, ONE FLUSH REPAIR AT A FRAME OR A STRINGER IS EQUIVALENT TO ONE EXTERNAL REPAIR. THE MAXIMUM NUMBER OF REPAIRS PERMITTED IS TWO REPAIRS ON ONE SIDE, OR ONE REPAIR ON EACH SIDE. THE REPAIRS CAN BE FLUSH REPAIRS OR EXTERNAL DOUBLER REPAIRS. REFER TO SRM 51-70-3 FOR MORE RVSM DATA.

[H] FOR OPERATION IN REDUCED VERTICAL SEPARATION MINIMUM (RVSM) AIRSPACE, THE AIRPLANE CANNOT HAVE MORE THAN TWO SURFACE IRREGULARITIES. THE IRREGULARITIES MUST BE LESS THAN THE LIMITS GIVEN IN CHART II. THE MAXIMUM NUMBER OF SURFACE IRREGULARITIES PERMITTED IS TWO ON ONE SIDE, OR ONE ON EACH SIDE. REFER TO SRM 51-70-3 FOR MORE RVSM DATA.

Aerodynamic Smoothness - Fuselage
Figure 5 (Sheet 4)

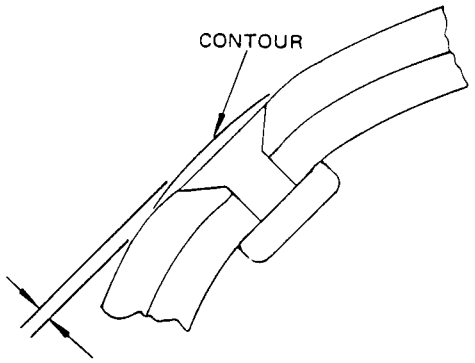

DEFORMATION:
0.010 MAX AT 10% OF FASTENER LOCATIONS
0.008 MAX AT 20% OF FASTENER LOCATIONS
0.005 MAX AT 70% OF FASTENER LOCATIONS

PERMISSIBLE DEFORMATION AT LEADING EDGE SKIN FASTENERS – WINGS

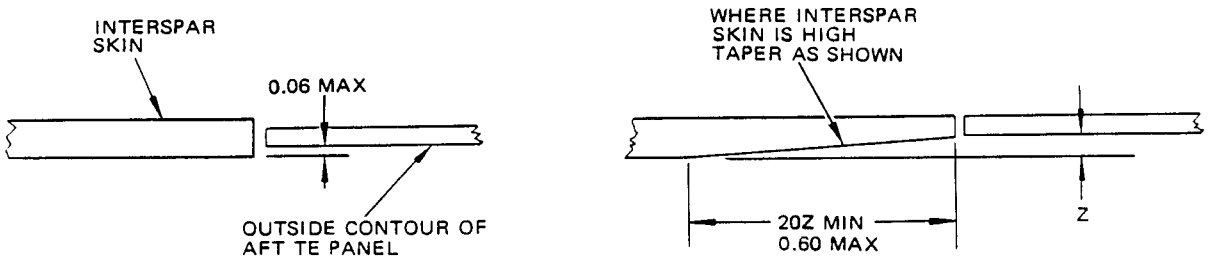

NOTE: DO NOT SHAVE FIBERGLASS PANELS

PERMISSIBLE MISMATCH FOR LOWER TRAILING EDGE PANELS – WINGS

Aerodynamic Smoothness - Wings and Empennage
Figure 6 (Sheet 1)

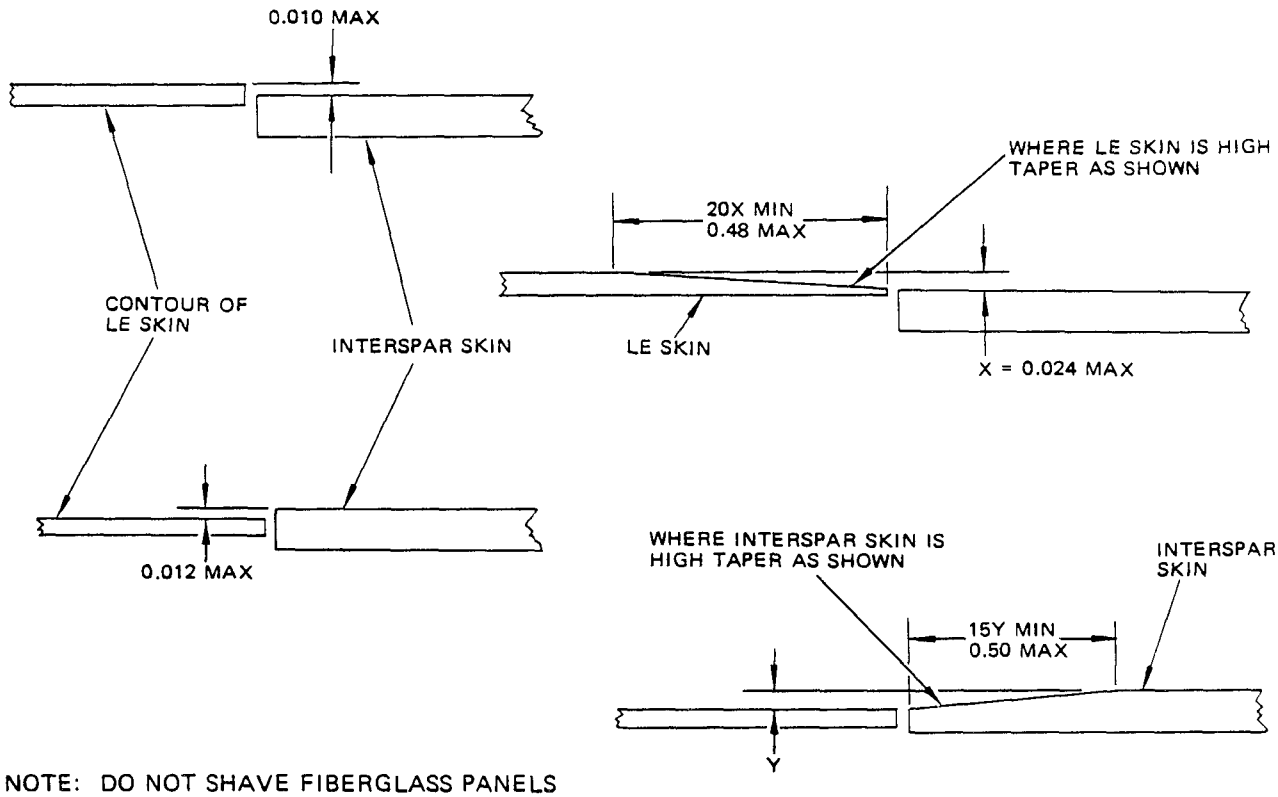

NOTE: DO NOT SHAVE FIBERGLASS PANELS

PERMISSIBLE MISMATCH AT FRONT SPAR SKIN JOINT – WINGS

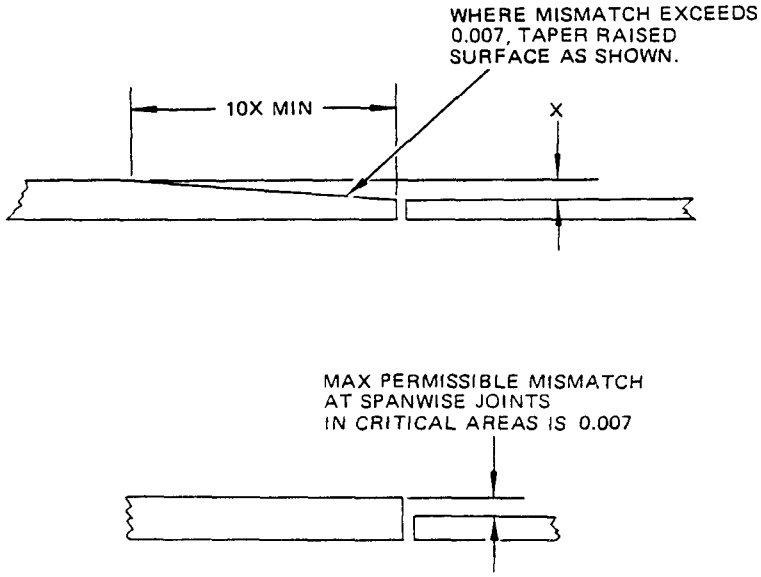

MISMATCH AT SKIN JOINTS CRITICAL AREAS – EMPENNAGE

Aerodynamic Smoothness - Wings and Empennage
Figure 6 (Sheet 2)

AERODYNAMIC SMOOTHNESS REQUIREMENTS JT8D ENGINE NACELLE INSTALLATION				
CONDITION		LOCATION	CRITICAL AND SEMI-CRITICAL	NON-CRITICAL
1	WAVE LENGTH TO DEPTH RATIO	ALL SKINS	SEE CHART I [B] [C]	SEE CHART I [D]
2	1.0 MAX DIA DISH AT FASTENERS (MAY BE ADDITIVE TO ABOVE)	AT FASTENERS	0.0050 [A]	0.0100 [A]

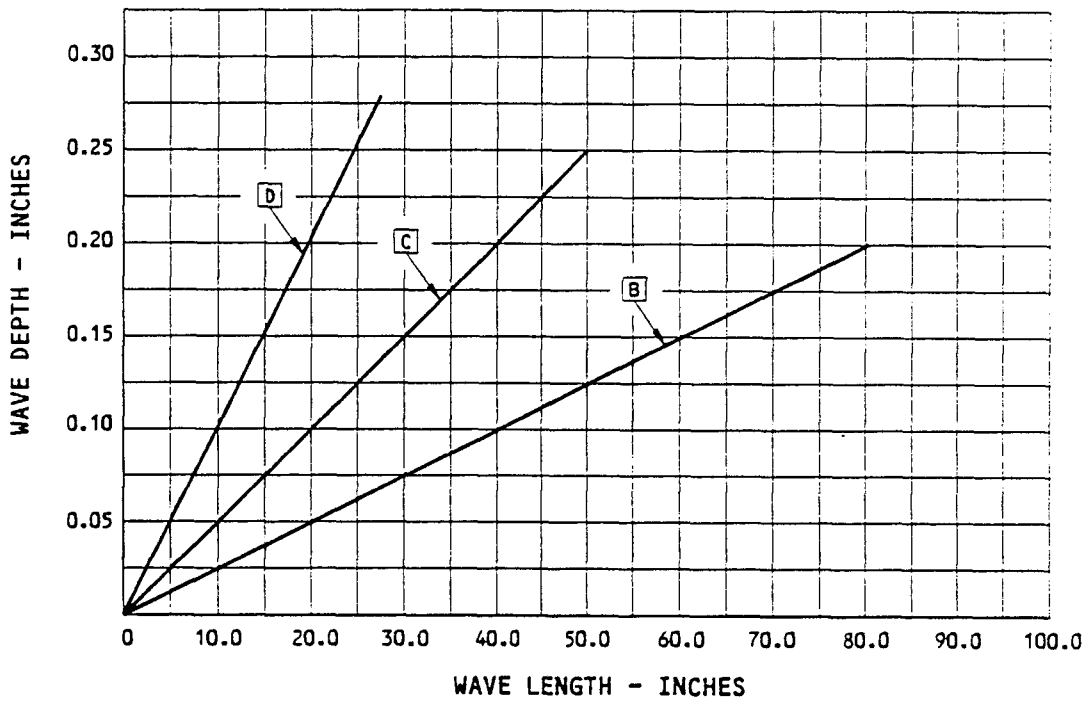

CHART I

NOTES

- FOR INFORMATION ON MISMATCH AND GAPS AT JOINTS, SEE DRAWING NUMBER 65-52257. FOR DETAILS OF CRITICAL, SEMI-CRITICAL, AND NON-CRITICAL AREAS, SEE FIGURE 1

[A] TO BE DETERMINED BY USE OF A 6.0 SPLINE AND FEELER GAGE.

[B] FROM NOSE COWL LEADING EDGE TO NACELLE STATION 83.50 AND PYLON LEADING EDGE TO NACELLE STATION 127.90, THE WAVE DEPTH MUST NOT EXCEED 0.0025 INCH PER INCH

[C] FOR ALL AREAS OF THE NOSE COWL AND PYLON NOT INCLUDED IN [B], THE WAVE DEPTH MUST NOT EXCEED 0.005 INCH PER INCH

[D] THE WAVE DEPTH MUST NOT EXCEED 0.0100 INCH PER INCH

Aerodynamic Smoothness - Nacelle and Fairing
Figure 7

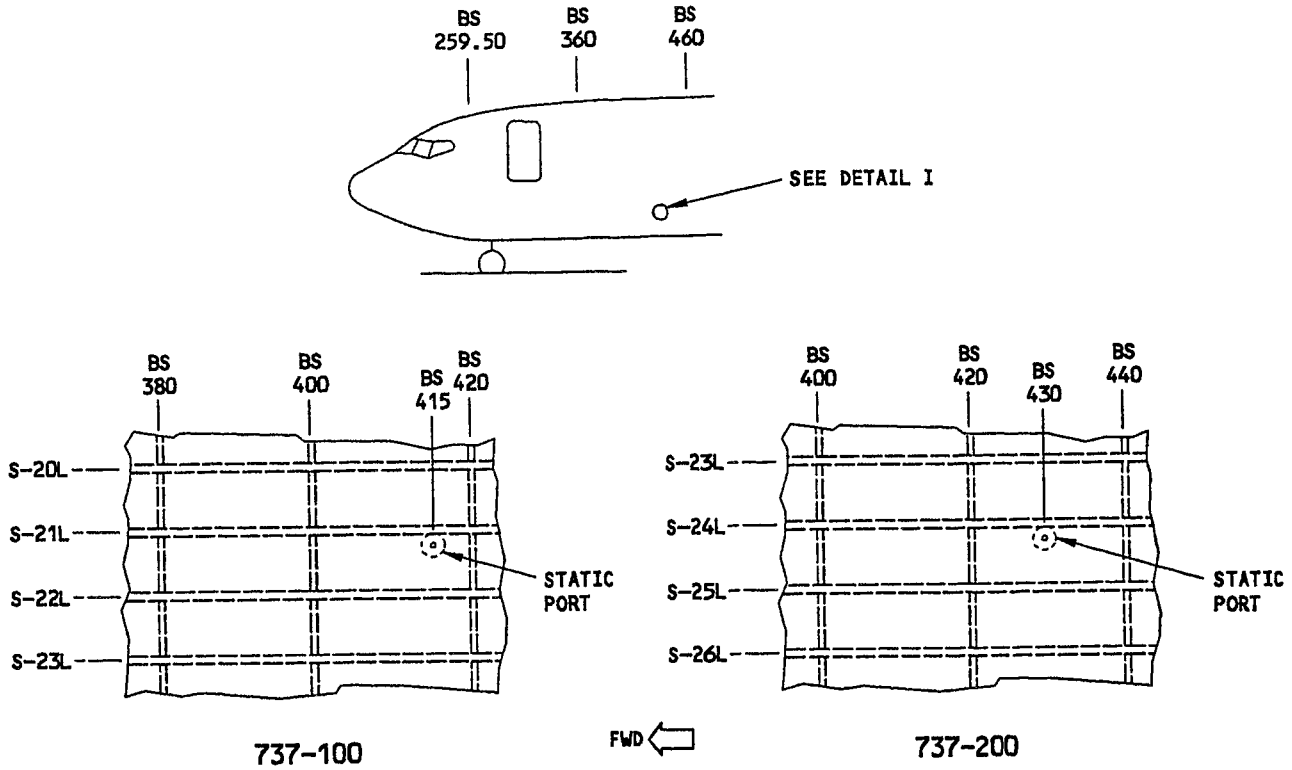

LOWER FUSELAGE SKIN
LEFT SIDE SHOWN, RIGHT SIDE OPPOSITE
DETAIL I

NOTES

- REFER TO DETAIL II FOR REPAIR ZONES FOR EXTERNAL REPAIRS AROUND THE STATIC PORT.
- FOR AN EXTERNAL REPAIR TO A CUTOUT FOR A DOOR, DO NOT CHAMFER THE EDGE OF THE PATCH THAT IS ALONG THE CUTOUT FOR THE DOOR.

[A] THE SUBSEQUENT CONDITIONS APPLY:

- EDGES OF EXTERNAL REPAIRS MUST BE CHAMFERED TO A 4:1 TAPER
- EDGES OF EXTERNAL REPAIRS ARE NOT PERMITTED IN ZONE A. (AN EXTERNAL REPAIR WHICH GOES INTO THIS ZONE MUST GO ACROSS ALL OF THE ZONE)
- FOR EXTERNAL REPAIRS LARGER THAN THIS ZONE: IF THE REPAIR THICKNESS IS GREATER THAN 0.08, THEN THE REPAIR MUST HAVE DIMENSIONS OF L>2W. IF THE REPAIR THICKNESS IS LESS THAN 0.08, THEN THE REPAIR MUST HAVE DIMENSIONS OF L>1.5W
- FLUSH REPAIRS WHICH DO NOT CHANGE THE INITIAL CONTOUR OF THE AIRPLANE ARE PERMITTED
- ONLY FLUSH FASTENERS ARE PERMITTED FOR EXTERNAL AND FLUSH REPAIRS.

[B] THE SUBSEQUENT CONDITIONS APPLY:

- EDGES OF EXTERNAL REPAIRS MUST BE CHAMFERED TO A 4:1 TAPER
- EXTERNAL REPAIRS WHICH GO ACROSS THIS ZONE MUST GO ACROSS THE FULL LENGTH OF THE ZONE
- EXTERNAL REPAIRS WHICH ENTER THIS ZONE MUST HAVE REPAIR DIMENSIONS OF L>W
- FLUSH REPAIRS WHICH DO NOT CHANGE THE INITIAL CONTOUR OF THE AIRPLANE ARE PERMITTED.

[C] THE SUBSEQUENT CONDITIONS APPLY:

- EDGES OF EXTERNAL REPAIRS MUST BE CHAMFERED TO A 4:1 TAPER
- FLUSH REPAIRS WHICH DO NOT CHANGE THE INITIAL CONTOUR OF THE AIRPLANE ARE PERMITTED.

Aerodynamic Smoothness - Static Ports
Figure 8 (Sheet 1)

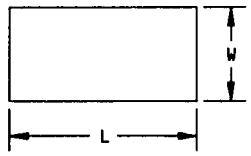

REPAIR DIMENSIONS

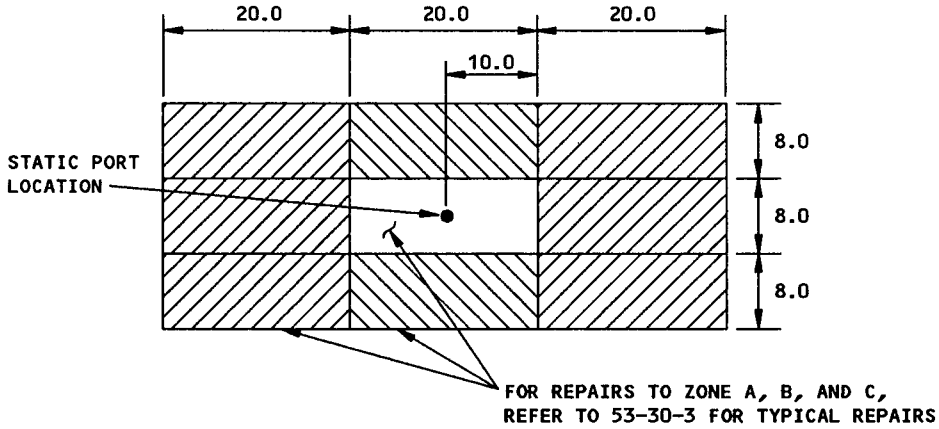

REPAIR ZONE A A

REPAIR ZONE B B

REPAIR ZONE C C

REPAIR ZONES FOR EXTERNAL REPAIRS AROUND THE STATIC PORT
DETAIL II

Aerodynamic Smoothness - Static Ports
Figure 8 (Sheet 2)

APPLICABILITY

- THE AERODYNAMIC LIMITS THAT ARE GIVEN IN THIS FIGURE ARE APPLICABLE TO EXTERNAL REPAIRS THAT GO INTO OR ARE FULLY INSIDE THE LIMITED REPAIR AREA AROUND THE PITOT-STATIC PROBES. THE LIMITED REPAIR AREA IS SHOWN IN DETAIL I.
- USE THIS FIGURE TO MAKE SURE THAT THE EDGES OF A REPAIR ARE NOT TOO CLOSE TO THE PORTS OF THE PITOT-STATIC PROBES OR TO THE ANGLE-OF-ATTACK SENSOR. THIS CLEARANCE IS NECESSARY TO GET THE CORRECT AIRSPEED AND ALTIMETER DATA FROM THE ANGLE-OF-ATTACK SENSOR AND THE PITOT-STATIC PROBES.
- IF THERE IS A REPAIR THAT IS INSTALLED ON THE AIRPLANE AND IT DOES NOT HAVE SUFFICIENT CLEARANCE AS SHOWN IN THIS FIGURE, CONTACT THE BOEING COMPANY.
- FOR OPERATION IN REDUCED VERTICAL SEPARATION MINIMUM (RVSM) AIRSPACE, THE AIRPLANE CANNOT HAVE MORE THAN TWO REPAIRS IN THE LIMITED REPAIR AREA OF THE AIRPLANE. BECAUSE OF THE AERODYNAMIC EFFECTS, ONE FLUSH REPAIR AT A FRAME OR A STRINGER IS EQUIVALENT TO ONE EXTERNAL REPAIR. AT MOST, THE AIRPLANE CAN HAVE TWO REPAIRS ON ONE SIDE, OR ONE REPAIR ON EACH OF THE TWO SIDES, AND EACH REPAIR CAN BE OF THE FLUSH TYPE OR WITH AN EXTERNAL DOUBLER.

INSTRUCTIONS

1. To make sure there is sufficient clearance between the vertical edges of the repair and the static ports of the pitot-static probes, do Procedure I. Refer to the example calculations which follow detail v.
2. To make sure there is sufficient clearance between the horizontal edges of the repair and the static ports of the pitot-static probes, do Procedure II. Refer to the example calculations which follow Detail V.
3. If the dimensions of the repair were changed by Procedure II, you must do Procedure I again.
4. To make sure there is sufficient clearance between the forward and aft edges of the repair and the angle-of-attack sensor, do Procedure III. Refer to the example calculations which follow Detail IV.
5. If the dimensions of the repair were changed by Procedure III, you must do Procedures I and II again.

PROCEDURE I - PITOT-STATIC PROBE, VERTICAL EDGE CLEARANCE

1. Find the dimensions of Zone A and Zone B. See Detail I for the locations of Zone A and Zone B:
   A. Find dimension "X" of Zone A as shown in Detail II.
   B. Find dimension "Y" of Zone B as shown in Detail III.
2. If the repair is not in Zone A, then there is sufficient clearance between the repair and the static port of the pitot-static probes.
3. If the repair is in Zone A, then it must go across the full length of Zone A and Zone B. If the repair does not go across the full length of Zone A and Zone B, then you must change the dimensions of the repair until one of these two conditions is correct:
   A. The repair does not go into Zone A.
   B. The repair goes across the full length of Zone A and Zone B. It is not permitted for the forward and aft edges of the repair to be in Zone A or Zone B. C

PROCEDURE II - PITOT-STATIC PROBE, HORIZONTAL EDGE CLEARANCE

1. Find the dimensions of Zone C as shown in Detail IV. The dimension "Y" of Zone C is the same as the dimension "y" of Zone B.
2. If a horizontal edge of the repair is not in Zone C, then there is sufficient clearance between the horizontal edges of the repair and the static port of the pitot-static probes.
3. If a horizontal edge of the repair is in Zone C, then you must change the dimensions of the repair. Make sure that one of these two conditions is correct:
   A. The repair does not go into Zone C.
   B. The repair goes vertically across the full area of Zone C. It is not permitted for an edge of the repair to be in Zone C. C
4. If the dimensions of the repair were changed by Procedure II, you must do Procedure I again.

Aerodynamic Repair Limits Around Pitot-Static Probes
Figure 9 (Sheet 1)

PROCEDURE III - ANGLE-OF-AIRFLOW SENSOR CLEARANCE

1. Find dimension R of Zone D. See Detail V for the location of Zone D. The formula for R is:

   R = 100 T, where T is the repair thickness. [D]

2. If an edge of the repair is not in Zone D, then there is sufficient clearance between the edges of the repair and the angle-of-airflow sensor.

3. If an edge of the repair is in Zone D, then you must change the dimensions of the repair. Make sure that one of these two conditions is correct:

   A. The repair does not go into Zone D.

   B. The repair goes across the full area of Zone D. It is not permitted for an edge of the repair to be in Zone D. [C]

4. If the dimensions of the repair were changed by Procedure III, you must do Procedures I and II again.

NOTES

- THE EDGES OF EXTERNAL REPAIR PARTS MUST HAVE A 4:1 TAPER.
- PROTRUDING HEAD FASTENERS ARE NOT PERMITTED IN THE LIMITED REPAIR AREA.
- ALL DIMENSIONS ARE IN INCHES, UNLESS GIVEN DIFFERENTLY.

[A] USE DETAIL II TO FIND THE WIDTH OF ZONE A:

- FIND THE POINT ON THE CHART WHERE THE VALUES OF THE REPAIR THICKNESS (T) AND THE REPAIR PLATE LENGTH (L) COME TOGETHER
- FIND THE VALUE OF "X".

SEE THE EXAMPLE GIVEN IN DETAIL II.

[B] USE DETAIL III TO FIND THE WIDTH OF ZONE B:

- FIND THE POINT ON THE CHART WHERE THE VALUES OF THE REPAIR THICKNESS (T) AND THE REPAIR WIDTH (W) COME TOGETHER
- FIND THE VALUE OF "Y".

SEE THE EXAMPLE GIVEN IN DETAIL III.

[C] THE REPAIR MUST NOT GO AFT OF THE BUTT JOINT AT BS 259.50. IT IS PERMITTED TO HAVE AN EDGE OF THE REPAIR IN ZONES A,B,C, OR D IF THESE ZONES GO AFT OF BS 259.50. IF IT IS NECESSARY TO HAVE THE REPAIR GO AFT OF BS 259.50, TELL THE BOEING COMPANY.

[D] THE REPAIR THICKNESS IS THE LARGEST TOTAL THICKNESS OF THE INSTALLED REPAIR PARTS. THE REPAIR THICKNESS IS MEASURED FROM THE OUTER CONTOUR OF THE SKIN.

[E] THE REPAIR DIMENSION "W" IS THE LARGEST DIMENSION OF THE INSTALLED REPAIR PARTS THAT ARE PERPENDICULAR TO THE WATERLINE DIRECTION.

[F] THE REPAIR DIMENSION "L" IS THE LARGEST DIMENSION OF THE INSTALLED REPAIR PARTS THAT ARE PARALLEL TO THE WATERLINE DIRECTION.

Aerodynamic Repair Limits Around Pitot-Static Probes
Figure 9 (Sheet 2)

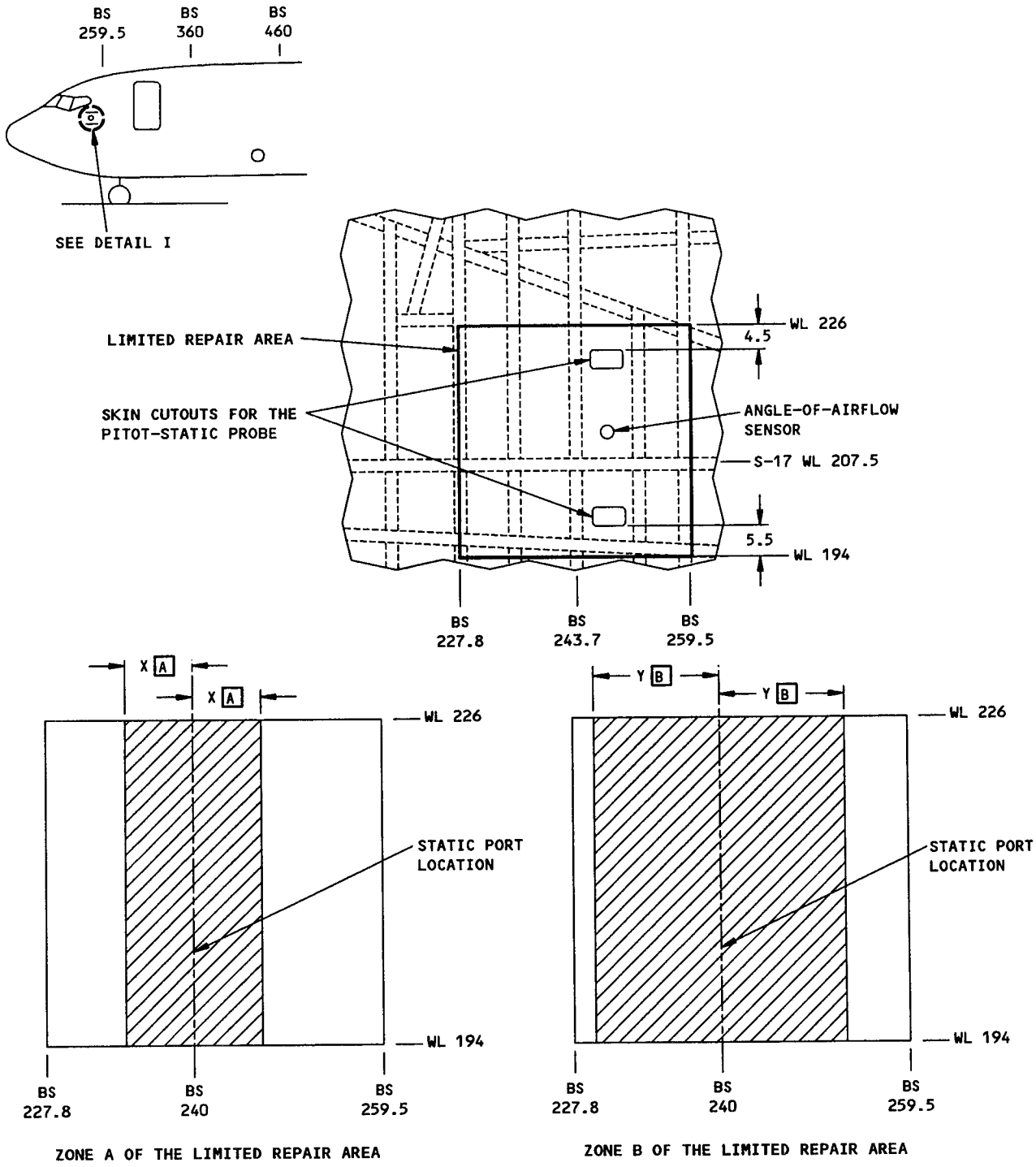

PROCEDURE I - PITOT-STATIC PROBE, VERTICAL EDGE CLEARANCE

DETAIL I

Aerodynamic Repair Limits Around Pitot-Static Probes
Figure 9 (Sheet 3)

E77671

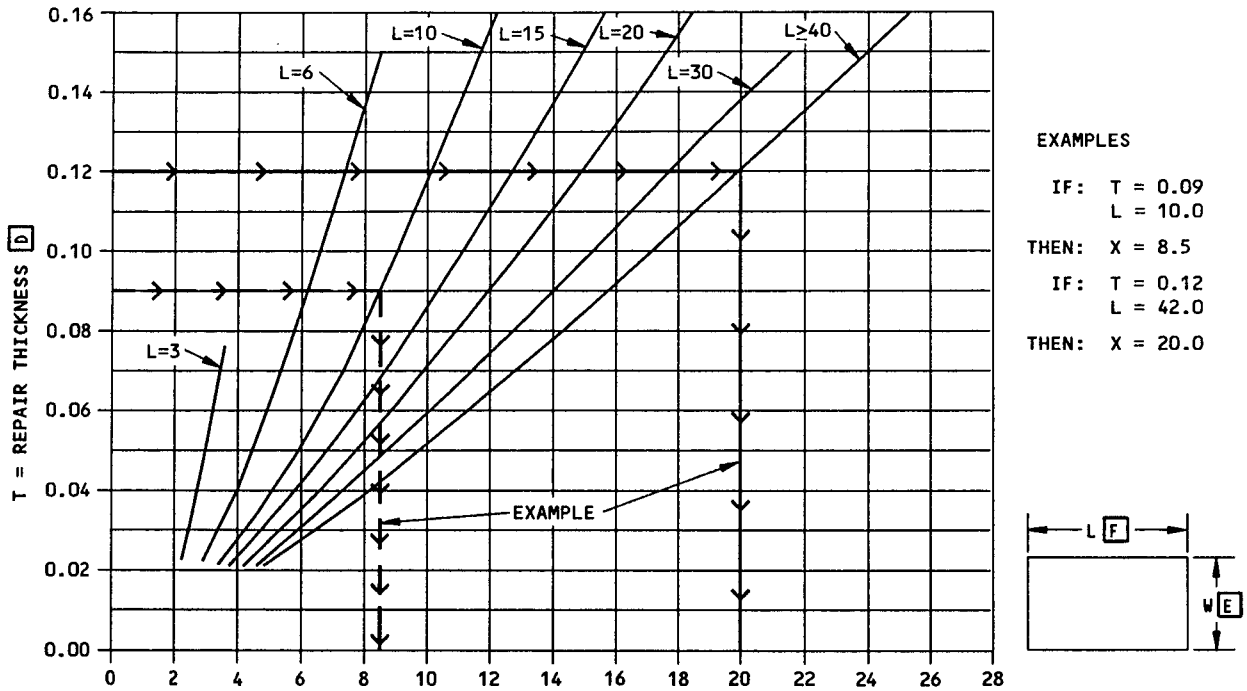

DIMENSION X OF ZONE A
DETAIL II

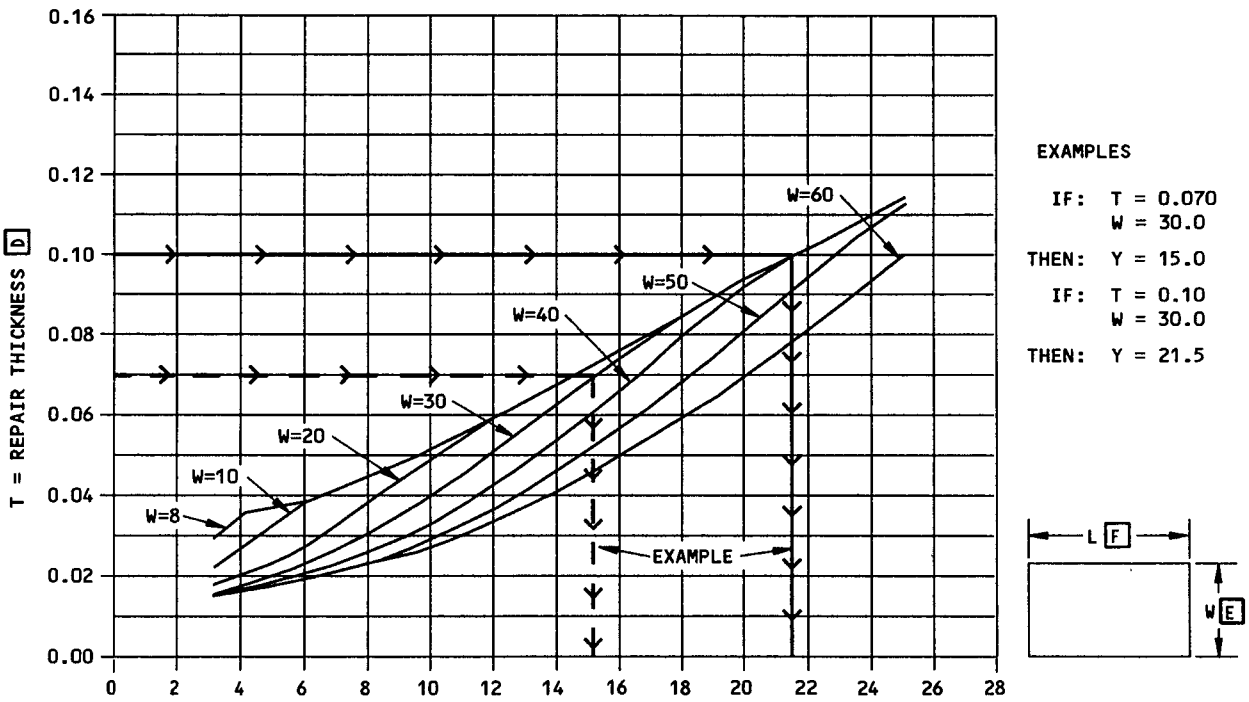

DIMENSION Y OF ZONE B
DETAIL III

Aerodynamic Repair Limits Around Pitot-Static Probes
Figure 9 (Sheet 4)

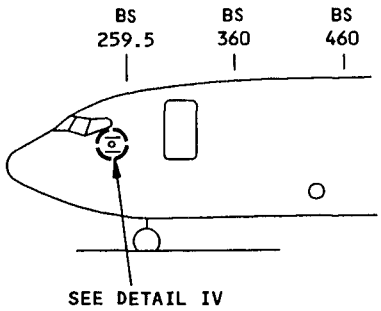

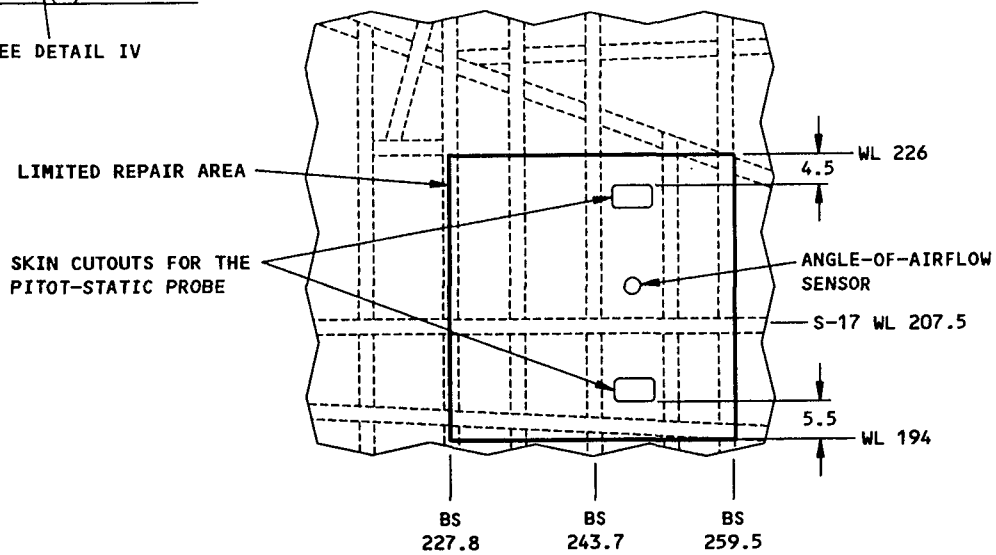

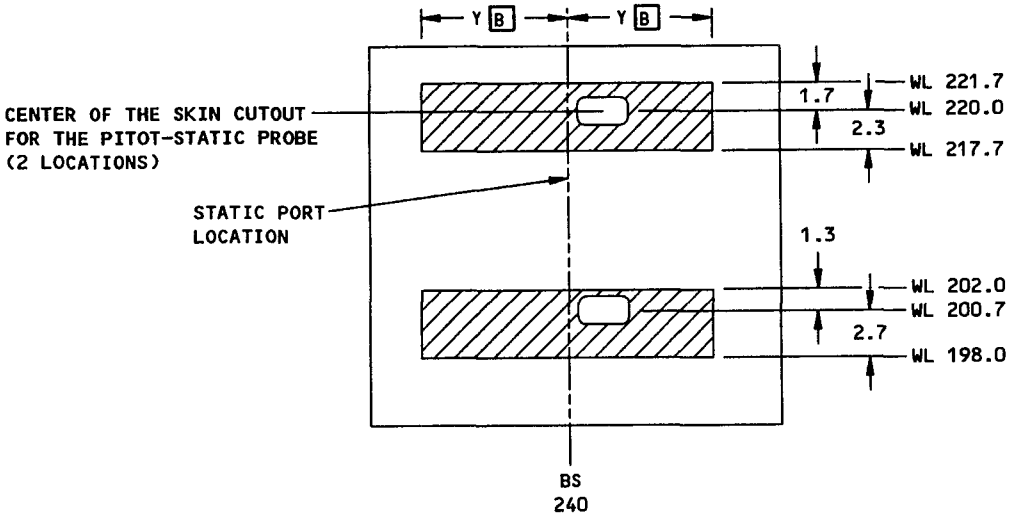

ZONE C OF THE LIMITED REPAIR AREA

PROCEDURE II - PITOT-STATIC PROBE, HORIZONTAL EDGE CLEARANCE

DETAIL IV

Aerodynamic Repair Limits Around Pitot-Static Probes
Figure 9 (Sheet 5)

E77578

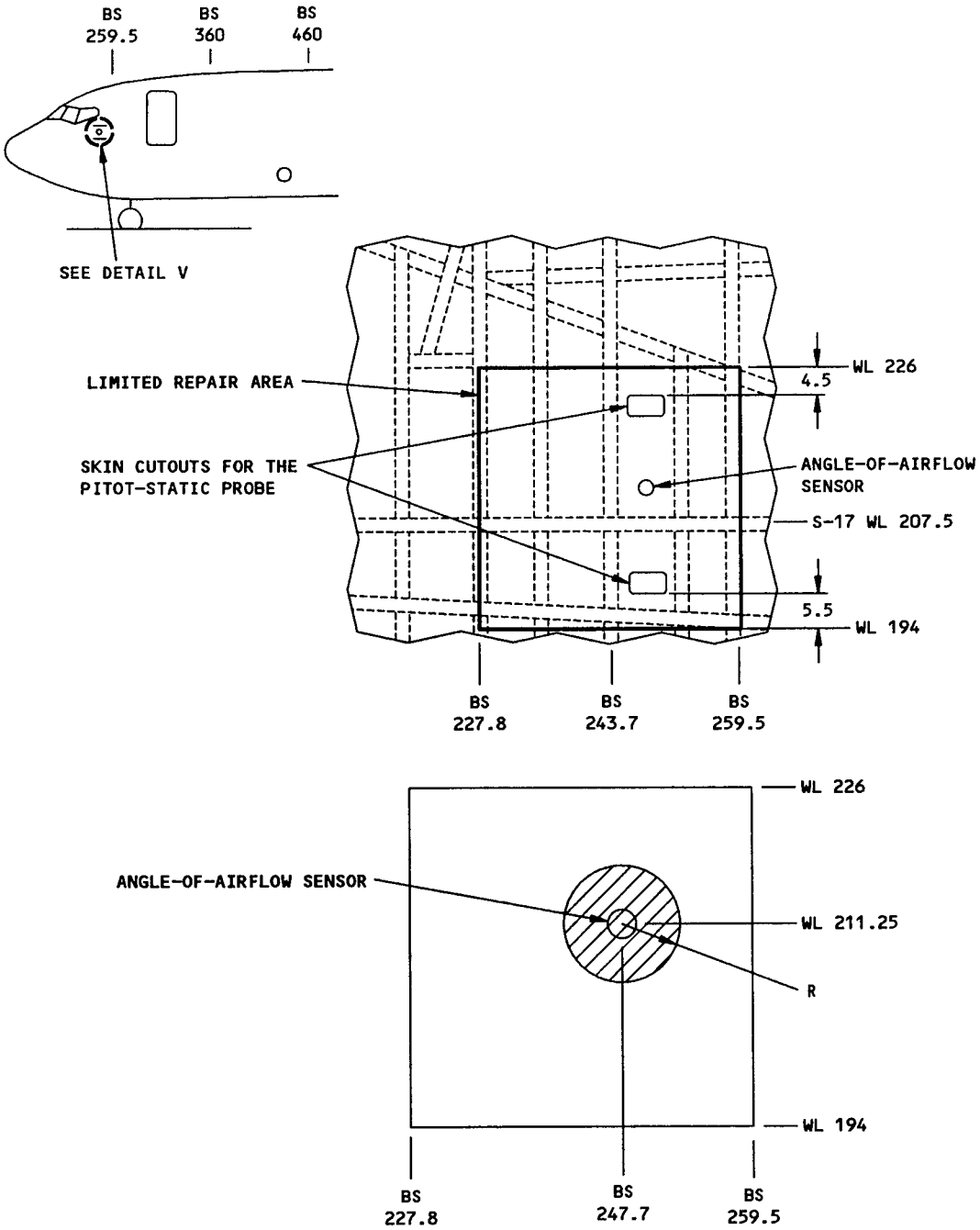

ZONE D OF THE LIMITED REPAIR AREA

PROCEDURE III - ANGLE-OF-AIRFLOW SENSOR CLEARANCE

DETAIL V

Aerodynamic Repair Limits Around Pitot-Static Probes
Figure 9 (Sheet 6)

EXAMPLE CALCULATIONS

AN EXTERNAL REPAIR IS TO BE MADE IN THE LIMITED REPAIR AREA AS SHOWN BELOW. LET THE DIMENSIONS OF THE EXTERNAL REPAIR DOUBLER BE:

LENGTH: L = 15.0 INCHES
WIDTH: W = 8.0 INCHES
THICKNESS: T = 0.060 INCH

THE LOCATION OF THE REPAIR IN THE LIMITED REPAIR AREA IS:

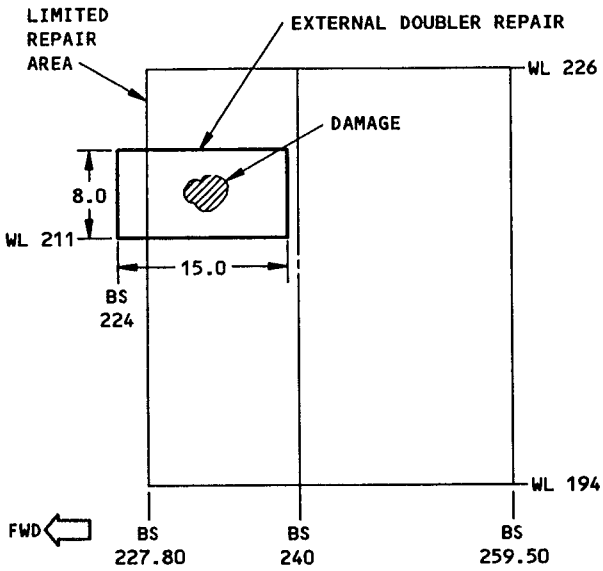

STEP 1 - DO PROCEDUE I TO FIND DIMENSION "X" OF ZONE A

FROM THE CHART IN DETAIL II, FOR A LENGTH (L) OF 15.0 INCHES AND A REPAIR THICKNESS (T) OF 0.060 INCH, THE DIMENSION OF ZONE A IS X = 8.0 INCHES

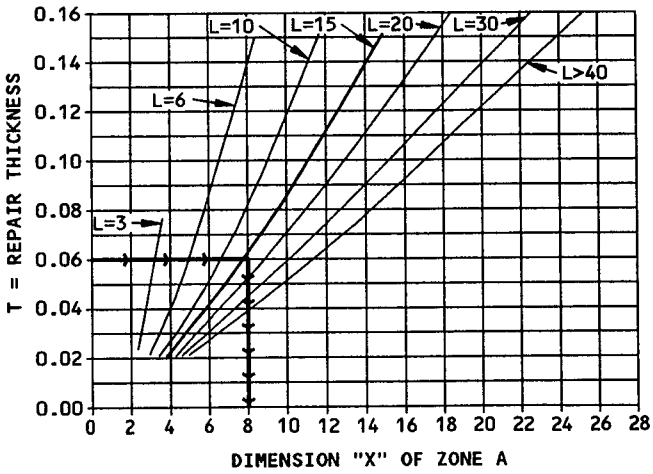

STEP 2 - FIND IF THE REPAIR DOUBLER IS IN ZONE A

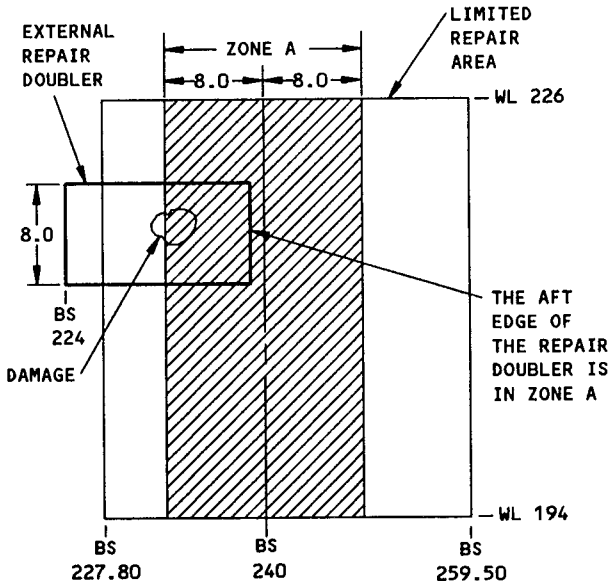

THE AFT EDGE OF THE REPAIR DOUBLER IS IN ZONE A. IT IS NOT PERMITTED FOR AN EDGE OF THE REPAIR TO BE IN ZONE A. THE LENGTH OF THE REPAIR MUST BE CHANGED SO THAT:

- THE REPAIR DOES NOT GO INTO ZONE A, OR
- THE REPAIR GOES ACROSS THE FULL LENGTH OF ZONES A AND B.

BECAUSE OF THE DAMAGE LOCATION, YOU CANNOT CHANGE THE LENGTH OF THE REPAIR SO THAT THE AFT EDGE DOES NOT GO INTO ZONE A. YOU MUST CHANGE THE LENGTH SO THAT THE REPAIR GOES ACROSS THE FULL LENGTH OF ZONES A AND B. THE DIMENSION "Y" OF ZONE B MUST BE FOUND.

Aerodynamic Repair Limits Around Pitot-Static Probes
Figure 9 (Sheet 7)

G69976

SAMPLE CALCULATIONS (CONTINUED)

STEP 3 - FIND THE DIMENSION "Y" OF ZONE B

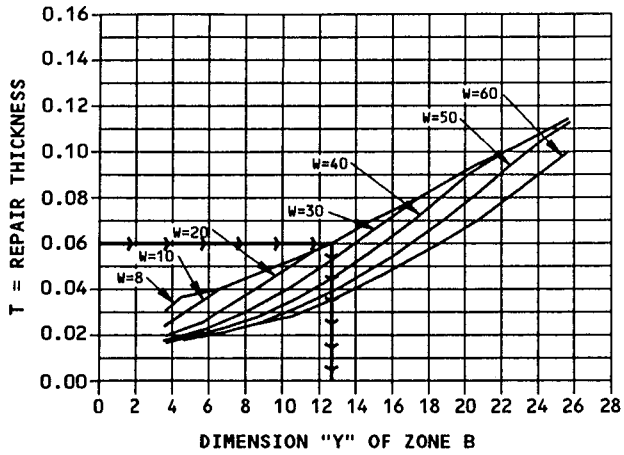

FROM THE CHART IN DETAIL III, FOR A REPAIR WIDTH (W) OF 8.0 INCHES AND A REPAIR THICKNESS (T) OF 0.060 INCH, THE DIMENSION Y IS 13.0 INCHES. FOR THE REPAIR TO GO ACROSS THE FULL LENGTH OF ZONES A AND B, THE LENGTH OF THE REPAIR MUST BE 29 INCHES (BS 253-224).

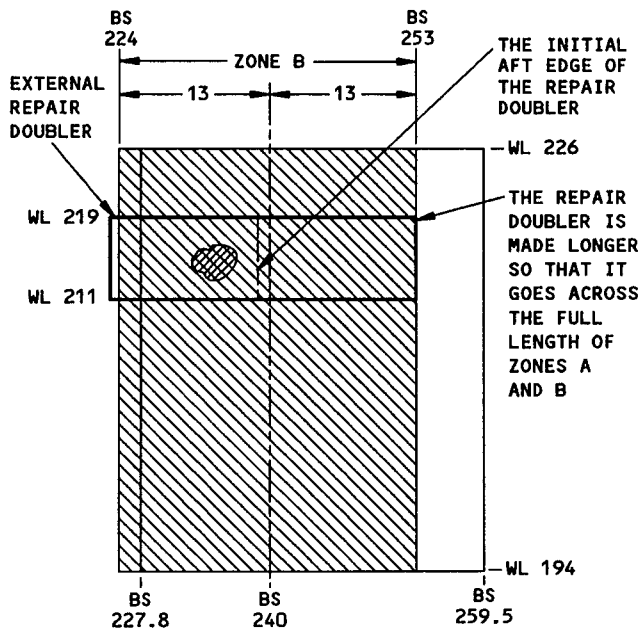

THE NEW DIMENSIONS OF THE REPAIR DOUBLER ARE:

LENGTH: L = 29.0 INCHES (BS 253-224)
WIDTH: W = 8.0 INCHES (UNCHANGED BY STEP 3)

THICKNESS: T = 0.060 INCH (UNCHANGED)

THERE IS SUFFICIENT CLEARANCE BETWEEN THE FORWARD AND AFT EDGES OF THE REPAIR AND THE PITOT-STATIC PROBES. DO PROCEDURE II TO FIND IF THERE IS SUFFICIENT CLEARANCE BETWEEN THE VERTICAL EDGES OF THE REPAIR AND THE PITOT-STATIC PROBES.

STEP 4 - DO PROCEDURE II TO FIND IF A HORIZONTAL EDGE OF THE REPAIR DOUBLER IS IN ZONE C.

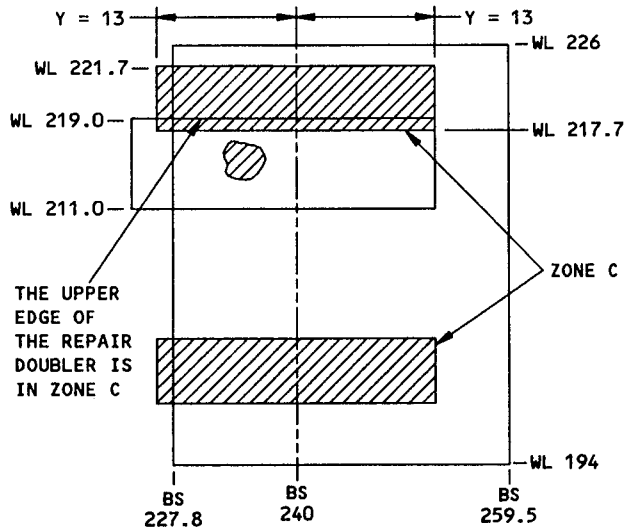

THE UPPER EDGE OF THE REPAIR DOUBLER IS IN ZONE C. THIS IS NOT PERMITTED. THE WIDTH OF THE REPAIR DOUBLER MUST BE CHANGED SO THAT:

- THE REPAIR DOUBLER DOES NOT GO INTO ZONE C, OR
- THE REPAIR DOUBLER GOES ACROSS THE FULL AREA OF ZONE C.

BECAUSE OF THE DAMAGE LOCATION, YOU CANNOT DECREASE THE WIDTH OF THE REPAIR. YOU MUST INCREASE THE WIDTH SO THAT THE UPPER EDGE IS ABOVE WL 221.7. FOR THIS EXAMPLE, MAKE THE EDGE AT WL 222.0 THIS MAKES THE WIDTH OF THE REPAIR DOUBLER 11.0 INCHES.

Aerodynamic Repair Limits Around Pitot-Static Probes
Figure 9 (Sheet 8)

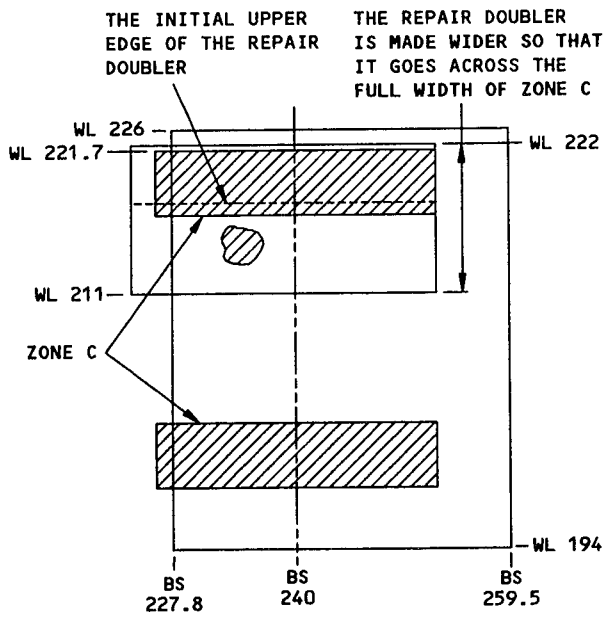

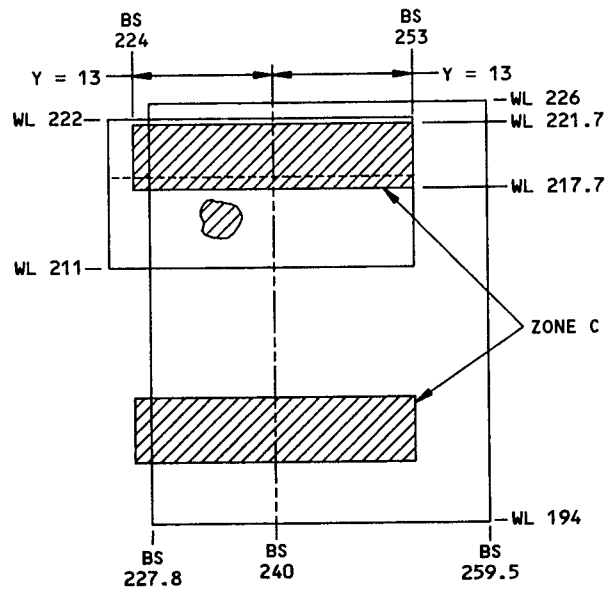

BECAUSE A DIMENSION OF THE REPAIR DOUBLER HAS CHANGED, YOU MUST DO PROCEDURE I AGAIN.

STEP 5 - FIND IF THE REPAIR DOUBLER, WITH THE NEW DIMENSIONS, GOES ACROSS ZONES A,B AND C.

L = 29.0 (BS 253 - BS 224)
W = 11.0 (WL 222 - WL 211)
T = 0.060

FROM DETAILS II AND III, YOU CAN FIND "X" AND "Y".

X = 10
Y = 13

BECAUSE "Y" IS LARGER THAN "X", AND BECAUSE "Y" IS NOT CHANGED FROM STEP 3, THE REPAIR IS PERMITTED. THE REPAIR DOUBLER GOES FULLY ACROSS ZONE B. THE REPAIR DOUBLER ALSO GOES ACROSS ZONE C.

Aerodynamic Repair Limits Around Pitot-Static Probes
Figure 9 (Sheet 9)

STEP 6 - DO PROCEDURE III AND FIND THE DIMENSION "R" OF ZONE D.

R = 100 X T (REPAIR THICKNESS)
R = 100 X 0.060
R = 6.0 INCHES

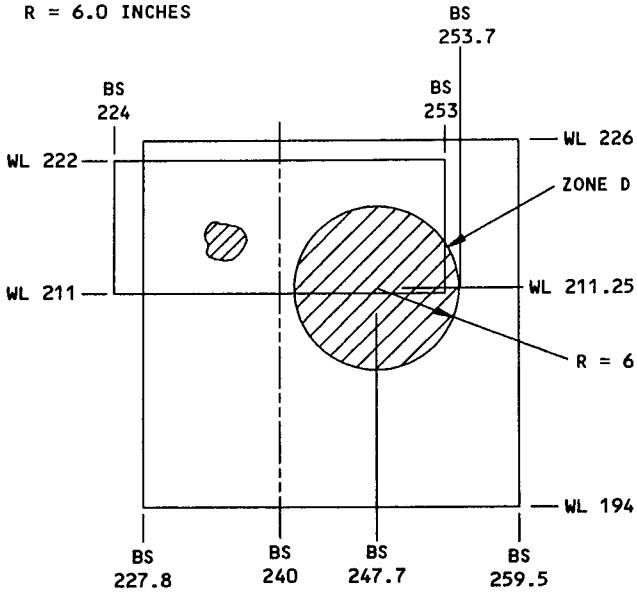

EXTEND THE AFT EDGE OF THE DOUBLER TO AT LEAST BS 253.7. THIS IS BS 247.7 PLUS 6.0 INCHES. FOR THIS EXAMPLE, USE BS 254.

EXTEND THE LOWER EDGE OF THE REPAIR DOUBLER TO AT LEAST WL 205.25. THIS IS WL 211.25-6.0 INCHES. FOR THIS EXAMPLE, USE WL 205.

THE REPAIR DOUBLER HAS EDGES IN ZONE D. BECAUSE THIS IS NOT PERMITTED, YOU MUST INCREASE THE LENGTH AND WIDTH OF THE REPAIR DOUBLER. THE REPAIR DOUBLER MUST GO ACROSS THE FULL AREA OF ZONE D.

STEP 7 - CHANGE THE LENGTH AND WIDTH OF THE REPAIR DOUBLER UNTIL IT GOES ACROSS THE FULL AREA OF ZONE D.

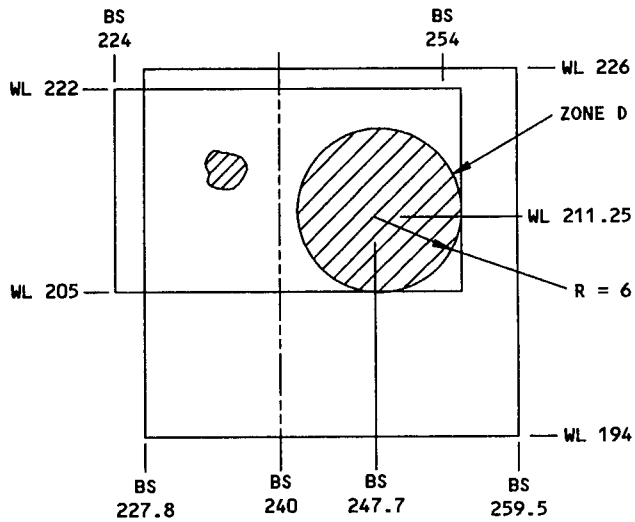

BECAUSE PROCEDURE III CHANGED THE DIMENSIONS OF THE REPAIR DOUBLER, YOU MUST DO PROCEDURES I AND II AGAIN.

Aerodynamic Repair Limits Around Pitot-Static Probes
Figure 9 (Sheet 10)

STEP 8 - FIND IF THE REPAIR DOUBLER GOES FULLY ACROSS ZONES A,B AND C.

L = 30.0 (BS 254 - BS 224)
W = 17.0 (WL 222 - WL 205)
T = 0.060

FROM DETAILS II AND III:

X = 10
Y = 13

BECAUSE "Y" IS LARGER THAN "X", AND BECAUSE "Y" IS NOT CHANGED FROM STEP 3, THE REPAIR IS PERMITTED. THE REPAIR DOUBLER GOES FULLY ACROSS ZONE B. THE REPAIR DOUBLER ALSO GOES ACROSS ZONE C.

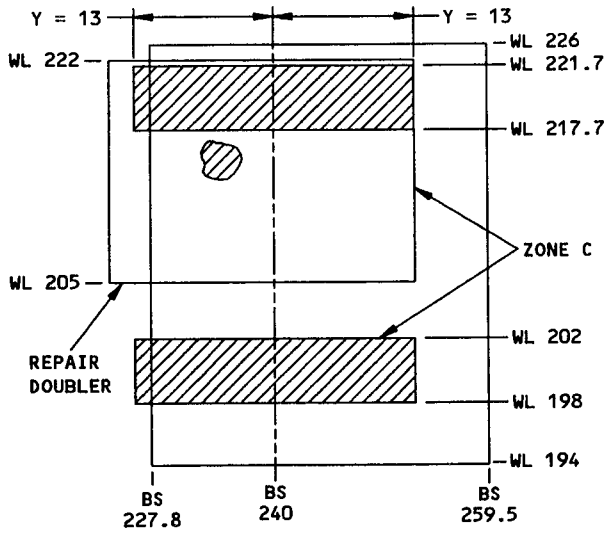

THE PERMITTED REPAIR DOUBLER IS 17.0 X 30.0 X 0.060. THE REPAIR IS COMPLETE.

Aerodynamic Repair Limits Around Pitot-Static Probes
Figure 9 (Sheet 11)

SKIN WAVINESS INSPECTION FOR RVSM OPERATION

1. SCOPE

A. These procedures are applicable for 737-200 aircraft that are approved to operate in Reduced Vertical Separation Minimum (RVSM) airspace. RVSM airspace is airspace where airplanes are separated by 1,000 feet (vertical), between Flight Level 290 and 410.

B. You cannot use these procedures to get the initial approval for the airplane for flight in RVSM airspace.

C. When you have damage in the area of the pitot-static probes, you must make an inspection. These procedures tell you how to return a RVSM-certified airplane to service when there is damage in the area of the pitot-static probes.

D. The area of the pitot-static probes is from Body Station 227.80 to 259.50, and from Waterline 194 to Waterline 226, on both sides of the airplane. See Figure 1.

E. A maximum of two surface irregularities in the area of the pitot-static probes are permitted, but only if they are less than the limits that are shown in SRM 51-70, Figure 5.

F. A maximum of two skin repairs are permitted in the area of the pitot-static probes. Because of the aerodynamic effects, a flush skin repair is equivalent to an external doubler repair. The maximum number of repairs permitted for one airplane is two repairs on one side, or one repair on each side. The repairs can be flush repairs or eternal doubler repairs.

G. Refer to SRM 53-30-3 for fuselage skin repairs. If you use and external doubler repair in the area of the pitot-static probes, you must also compare the repair with the aerodynamic limits. These aerodynamic limits are given in SRM 51-70, Figure 9.

2. PROCEDURES FOR SURFACE IRREGULARITIES AND GENERAL REPAIRS

A. Find the area of the pitot-static probes. See Figure 1.

B. Find the dimensions of the dent or surface irregularity.

NOTE: Refer to SRM 53-30-1, Figure 1, for the limit that is given for Fuselage Skin Allowable Damage. If the dent or surface irregularity, after cleanup, is less than the Allowable Damage limit, then continue with this step. If not, you must do a repair.

C. Refer to SRM 51-70, Figure 5, for the Fuselage Aerodynamic Smoothness limits. This will tell you the limits that are permitted for dents and surface irregularities in the area of the pitot-static probes.

D. Use a shin gage and a straightedge to measure the skin waviness.

E. For operation in RVSM airspace, an airplane cannot have more than two surface irregularities. The irregularities must be less than the limits given in the chart of Figure 5. The maximum number of surface irregularities permitted for one airplane is two, and the two can be on one side, or there can be one on each side.

F. If a repair is necessary, you can make an external doubler repair or a flush repair. Refer to SRM 53-30-3 for the two types of repair. If you use an external doubler repair in the area of the pitot-static probes, you must also compare the repair with the aerodynamic limits. These aerodynamic limits are given in SRM 51-70, Figure 9.

G. For operation in RVSM airspace, an airplane cannot have more than two repairs in the limited repair area. Because of the aerodynamic effects, a flush skin repair is equivalent to an external doubler repair. The maximum number of repairs permitted for one airplane is two, and the two repairs can be on one side, or there can be one repair on each side. The repairs can be flush repairs or external doubler repairs.

3. PROCEDURES FOR SURFACE IRREGULARITIES AND REPAIRS THAT ARE MORE THAN THE LIMITS

A. For surface irregularities that are more than the limits, you can do a repair or you can do the steps that follow:

(1) Refer to Chapter 53 of the 737 Maintenance Manual (AMM 51-10-00). The Maintenance Manual will tell you:

(a) where to get the measurement tool

(b) how to set the measurement tool on the fuselage

(c) how to measure the skin waviness

(d) how to make an analysis of the results

(2) You must measure both sides of the airplane.

(3) Send the measurements to Boeing. Include these data:

(a) the airplane serial number

(b) the number of hours on the airplane

(c) the number of flight cycles on the airplane

(d) the skin waviness measurements for the left side and the right side of the airplane

(e) a diagram that shows the dimensions of the surface irregularities, of repairs, and of other unusual structure

(4) You can give these data to a Boeing Field Service Representative or you can send it to:

Boeing Commercial Airplane Group
P.O. Box 3707
Seattle, Washington 98124
Attn.: Director 737/757 Service Engineering
Org. M-7300, Mail Stop 20-85

(5) Boeing can do a Computational Fluid Dynamics (CFD) analysis of the measurements. The values of the airplane skin waviness can be satisfactory for RVSM operation although the measured values are greater than the limits. This is because both sides of the airplane are included.

(6) If the CFD analysis finds that the skin waviness is greater than the limits for RVSM operation, you must do a repair.

B. For repairs that are more than the limits for RVSM, and:

(1) you cannot make a flush skin repair, and

(2) you cannot make several smaller external repairs into one larger external repair

Get more instructions from Boeing.

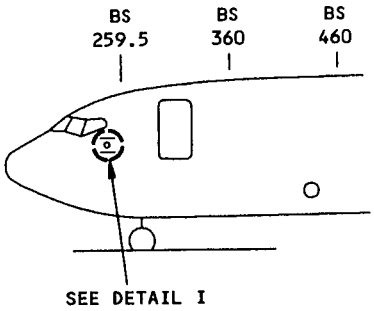

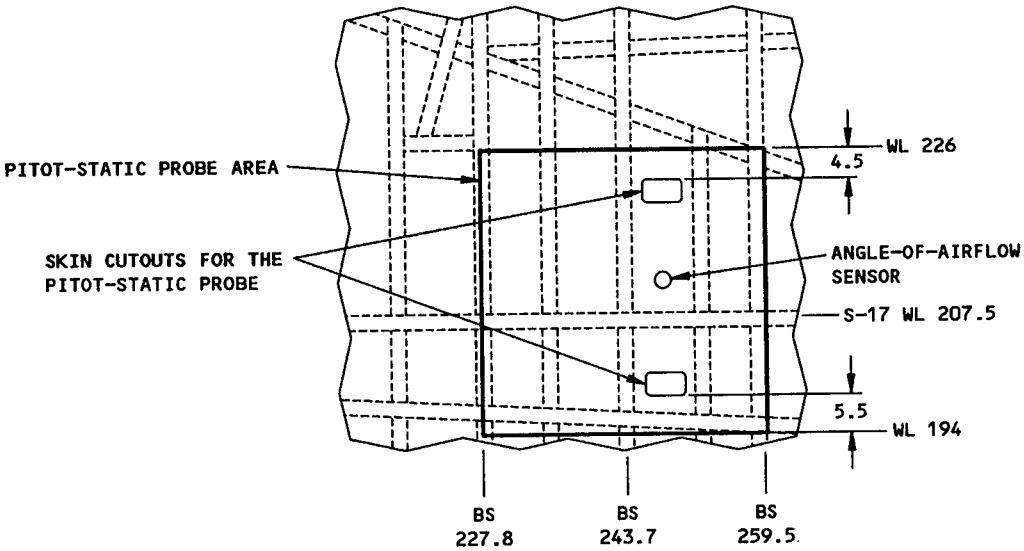

Skin Waviness Inspection for RVSM Operation
Figure 1

CONTROL SURFACE BALANCING - (GLASS FABRIC/METAL CONTROL SURFACES)

WARNING: USE 51-80 FOR GLASS FABRIC/METAL CONTROL SURFACE BALANCING. USE 51-81 FOR GRAPHITE COMPOSITE CONTROL SURFACE BALANCING. FAILURE TO COMPLY CAN PRODUCE UNDERSIRABLE FLUTTER AND DYNAMIC INSTABILITY WHICH COULD AFFECT FLIGHT SAFETY.

1. General

A. This subject contains general balancing information applicable to glass fabric/metal control surfaces. For specific limitations and procedures see the appropriate subject as follows (for graphite composite control surface balancing see 51-81):

Aileron - 51-80-1
Aileron balance panel - 51-80-2
Aileron tab - 51-80-3
Elevator - 51-80-4
Elevator balance panels - 51-80-5
Elevator tab - 51-80-6
Rudder - 51-80-7

B. The effect on control surface balance must be considered every time one of the components above is repaired or repainted.

WARNING: ANY COMPONENTS OF THE MAIN CONTROL SURFACE SYSTEMS THAT DO NOT MEET THE BALANCE REQUIREMENTS SPECIFIED IN 51-80-1 THROUGH 51-80-7 CAN PRODUCE UNDESIRABLE FLUTTER AND DYNAMIC INSTABILITY WHICH COULD AFFECT FLIGHT SAFETY.

C. The accumulative effect of repairs and repeated painting without stripping the old paint can eventually lead to using all of the available adjust weight positions. Should this situation arise consideration should be given to paint removal as a means of regaining an adjustment capability.

D. When considering the advisability of repair and rebalancing a control surface without removal from the airplane, it must be established that it is possible to meet the accuracy criteria specified for calculation of the repair moment. Where it is not practicable to meet the accuracy criteria the control surface must be removed for rebalancing.

E. When a control surface is removed for repair if should be rebalanced in a jig and not by use of the methods prescribed for rebalancing on the airplane.

F. When rebalancing a control surface, consider rebalancing to the center of the allowable moment range, as this will reduce the possibility of balance adjustment for the next repair.

2. Special Tools and Equipment

A. See figure 1 for details of Special Tools and Equipment for control surface balancing.

3. Estimation of Repair Weight of Honeycomb Repairs

A. Repairs to control surfaces made from aluminum and nonmetallic honeycomb are described in 51-40-6 and 51-40-9.

B. To permit the calculation of weight added by repair when a control surface has not been removed from the airplane, see the weights of repair materials listed in figures 2 and 3, which also give the degree of accuracy which can be expected in weight calculation, assuming a reasonable standard of workmanship.

C. When substitute materials are used for replaced parts, such as fiberglass core in place of aluminum core, the difference in weight must be taken into account when computing the weight of the repair.

4. Estimation of Weight Added by Repainting

A. General

(1) The approximate weight added by repainting a control surface can be calculated by the method described in this paragraph, to enable the balance to be adjusted without removing the component from the airplane.

(2) This information is only valid when existing paint has not been removed. It is not practicable to allow for the weight of such a large area of paint removed by calculation.

(3) It is only permissible to adjust the balance by using calculated weights for two paintings or repairs. When a third repainting or repair is found necessary the control surface must be removed for rebalancing.

(4) Where the aileron or elevator tabs are repainted the calculated paint weight must be added to the prepainting tab weight to calculate the correct number of balance weights required. See 51-80-3 or 51-80-6 as appropriate.

B. To estimate the weight added by repainting proceed as follows:

(1) Make a sample panel of any light gage material (0.02 to 0.063) 2 feet x 2 feet, measured as accurately as possible.

(2) Weigh the sample panel to the nearest 0.01 pound.

(3) Position the sample panel on the fixed surface (i.e., wing, vertical or horizontal stabilizer) at about midspan of the control surface and 1 or 2 inches away from it. Use double-backed tape or adhesive that can be readily removed to secure it in position. Mask the surrounding area to prevent the paint marking the fixed surface.

(4) Paint the control surface and the sample panel.

(5) Allow the paint to dry and remove the sample panel. Ensure that it is free from tape or adhesive.

(6) Weigh the sample panel to the nearest 0.01 pound.

(7) Subtract the weight of the unpainted panel from the weight of the painted panel to obtain the weight of the paint.

(8) Divide the weight of paint by 576 to ascertain the weight per square inch.

(9) Use the areas and centers of gravity shown below to calculate the weights and moments for balance weight adjustment in accordance with 51-80-1 through 51-80-7.

Surface	Painted Area (sq in.)	CG of Added Wt (inches aft of hinge)
Aileron (less tab)	3,740	8.5
Aileron tab	660	---
Elevator (less tab)	9,624	10.1
Elevator tab	1,070	---
Rudder	16,640	14.8

C. To enable the weight of paint removed from part of a control surface to be calculated, weight information is given in figure 3. As accurate calculation is required to permit a reasonable sized area to be removed and remain within the accuracy criteria specified for the control surface, the thickness or weight should be established by one of the following methods. Thickness should be measured at several points to obtain an average.

(1) On metal surfaces use an isometer or eddy current device and calibrated sample.

(2) On fiberglass surfaces use a sonic tester and calibrated sample.

(3) Use a bar-type micrometer taking a reading before and after paint removal.

(4) Use a micrometer on the edge of a panel.

(5) Scrape paint from a measured area and weigh it.

(6) Measure the thickness of paint chips with a micrometer.

5. Sign Convention

A. Distances are considered positive (+) if measured aft of the hinge line, negative (-) if measured forward of the hinge line. Weight reactions are considered positive (+) if the surface exerts a downward load on the support, negative (-) if the load is upward.

SPECIAL TOOLS AND EQUIPMENT			
ITEM	QUANTITY REQUIRED	DETAIL NO. OR DESCRIPTION	SOURCE
BALANCE JIG STAND	1	DETAIL II	BOEING FME 5–71799 OR F70330–3, –4 OR EQUIVALENT
TOOL STAND	1	DETAIL III	BOEING F70330–4
PLATFORM SCALE	1	DETAIL III	ANY SOURCE
FORWARD HINGE SUPPORT AILERON	2		BOEING TSJ65–46454 OR F70330–3, –4 OR EQUIVALENT
FORWARD HINGE SUPPORT ELEVATOR	2		BOEING 5ME65–73788–2 OR F70330–3, –4 OR EQUIVALENT
	1		BOEING 5ME65–73788–3 OR F70330–3, –4 OR EQUIVALENT
FORWARD HINGE SUPPORT RUDDER	3		BOEING 5ME65–73788–1 OR EQUIVALENT
ADJUSTABLE AFT HINGE SUPPORT	1	DETAIL IV	FABRICATE
PROTRACTOR LEVEL	1	DETAIL I	ANY SOURCE
C–CLAMPS	3	6 IN. SIZE	ANY SOURCE
BEAM ASSEMBLY (F70330–16) [A]	1	DETAIL V	ANY SOURCE

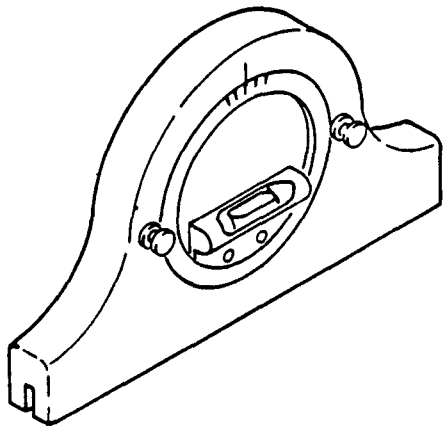

PROTRACTOR LEVEL
DETAIL I

NOTES

[A] THE –16 BEAM ASSEMBLY MAY BE ORDERED AS A PART OF THE –3 AND –4 ASSEMBLIES WHICH REPLACE THE CORRESPONDING ITEMS ABOVE FOR FUTURE PROCUREMENT.

Balancing Equipment
Figure 1 (Sheet 1)

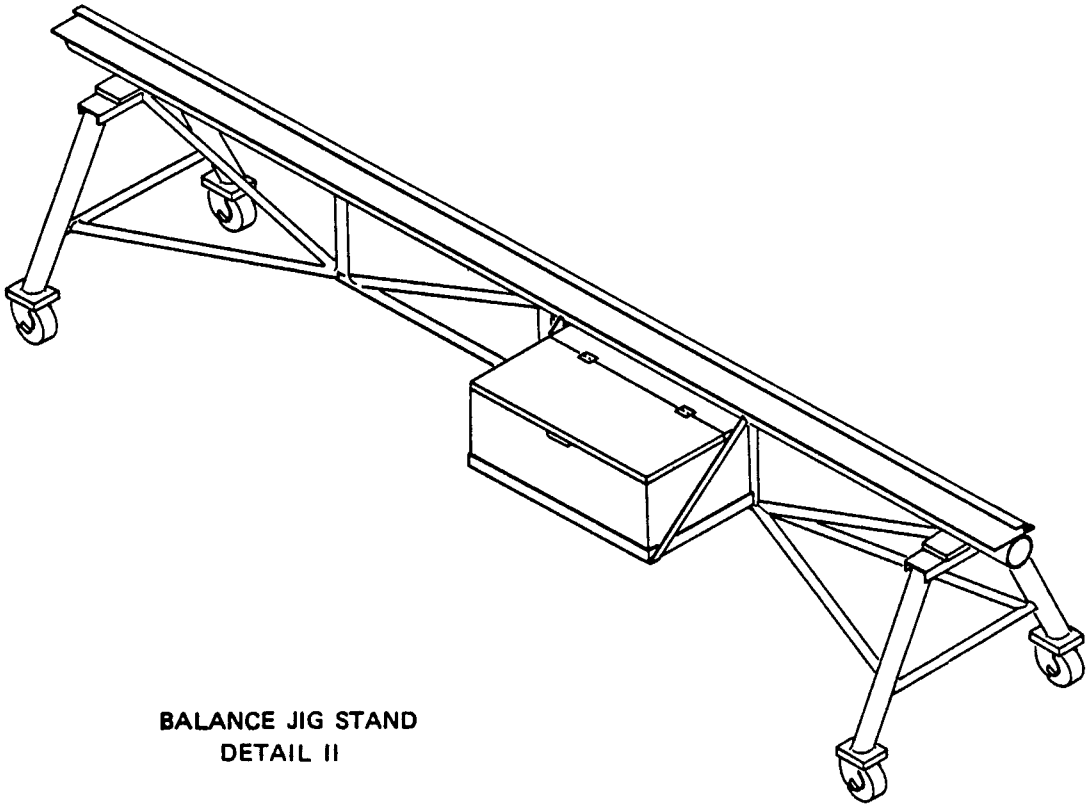

BALANCE JIG STAND
DETAIL II

WEIGHT RANGE (POUNDS)	REQUIRED ACCURACY OF PLATFORM SCALE
6 TO 9	± 0.01
10 TO 34	± 0.1 OF 1% OF THE MEASURED WEIGHT
35 TO 299	± 0.2 OF 1% OF THE MEASURED WEIGHT
300 AND ABOVE	± 0.25 OF 1% OF THE MEASURED WEIGHT

* CONTACT FAIRBANKS MORSE AND CO., CHICAGO, ILLINOIS.

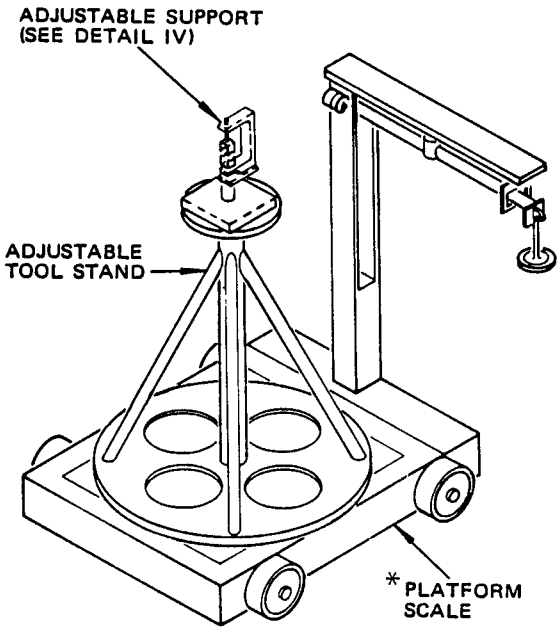

ADJUSTABLE TOOL STAND AND PLATFORM SCALE
DETAIL III

Balancing Equipment
Figure 1 (Sheet 2)

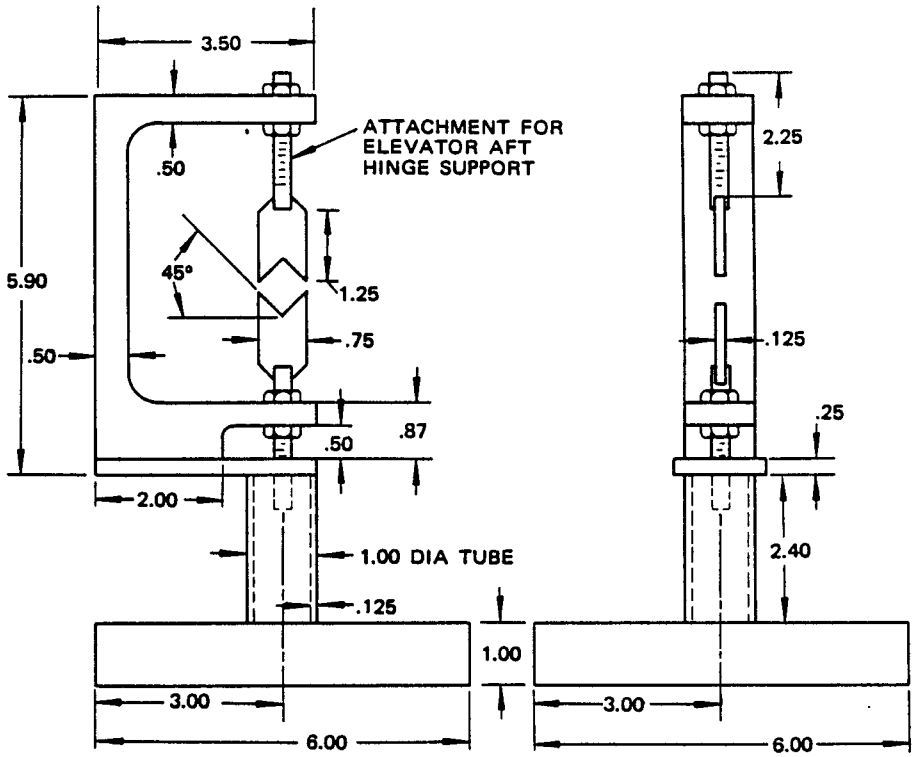

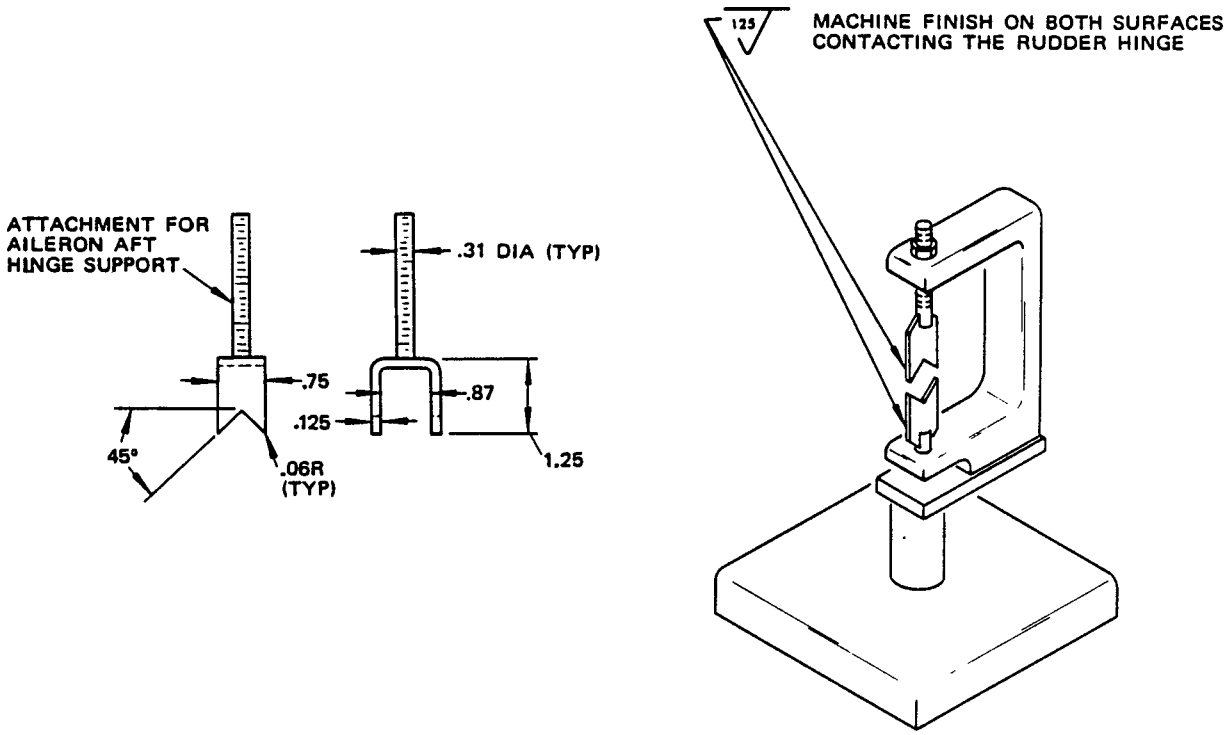

SUPPORT FOR, RUDDER BALANCE ARM, AFT
ELEVATOR HINGE, AND AFT AILERON HINGE
DETAIL IV

Balancing Equipment
Figure 1 (Sheet 3)

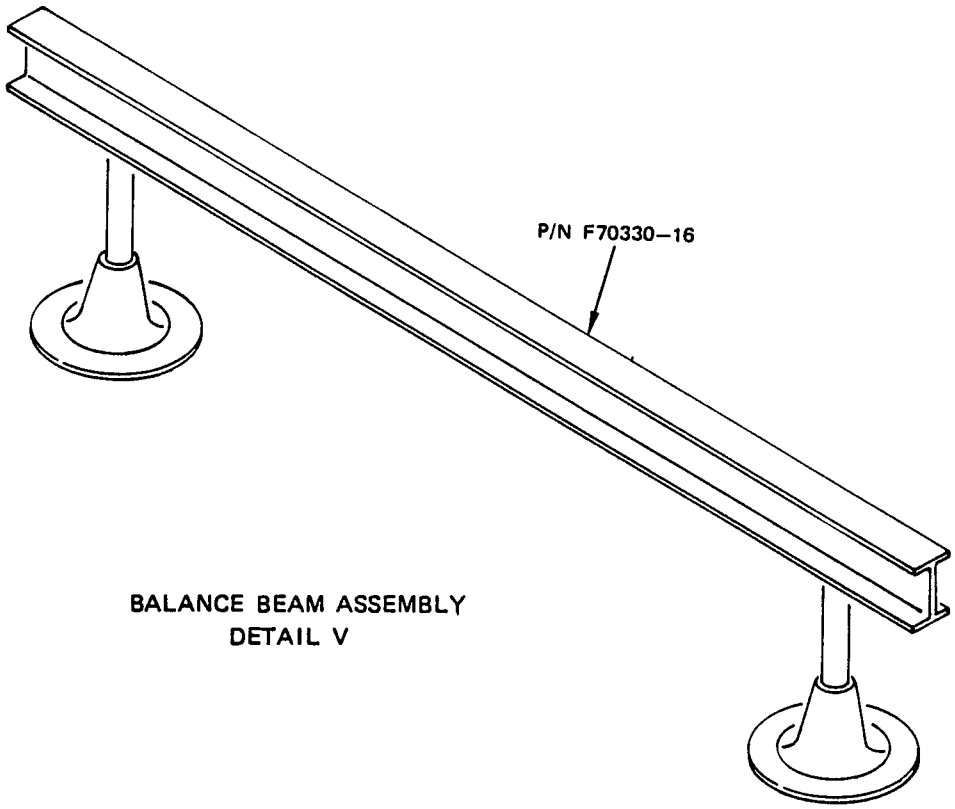

BALANCE BEAM ASSEMBLY
DETAIL V

NOTE

- CALCULATE WEIGHT ADDED BY REPAIRS TO CONTROL SURFACES OF HONEYCOMB CONSTRUCTION BY REFERENCE TO TABLES I, II AND III.
- WHERE SUBSTITUTE MATERIALS ARE USED TO REPLACE ORIGINAL PARTS THE DIFFERENCE IN WEIGHT MUST BE CALCULATED.
- ASSUMING GOOD WORKMANSHIP AND CALCULATION THE DEGREE OF ACCURACY ACHIEVED IN CALCULATING WEIGHTS WILL BE WITHIN ± 10% FOR FIBERGLASS ASSEMBLIES AND WITHIN ± 5% FOR METAL ASSEMBLIES.

[A] DENSITY FOR MIX DESCRIBED IN 51-40-9 ONLY.

SAMPLE CALCULATION

1. ASSUME 4-INCH DIAMETER HOLE IN ONE SKIN AND CORE OF ALUMINUM HONEYCOMB PANEL TO BE REPAIRED AS SHOWN IN 51-40-6, FIGURE 12. ORIGINAL CORE - BMS 4-4, TYPE 3-10, 1 INCH THICK. ORIGINAL SKIN 0.020 2024 ALUMINUM ALLOY.

2. AS FIBERGLASS IS TO BE SUBSTITUTED FOR THE ORIGINAL ALUMINUM SKIN AND CORE IT IS NECESSARY TO CALCULATE THE WEIGHT OF THE PARTS REMOVED:

   SKIN -- $3.142 \times 2^2 \times 0.002 = 0.0251$ LB
   CORE -- $3.142 \times 2^2 \times 1 \times 0.0018 = \underline{0.0226}$ LB

   TOTAL MATERIAL REMOVED $\underline{0.0477}$ LB

3. CALCULATE WEIGHT OF REPAIR MATERIALS:

   NP3/16 - 112 - 4.5 CORE -- $3.142 \times 2^2 \times 1 \times 0.0026 = 0.0327$ LB
   2 PLIES OF 181 FIBERGLASS CLOTH
   $2 \times 3.142 \times 3.5^2 \times 0.00067 = 0.0516$ LB
   CORE SPLICE ADHESIVE (PERIMETER = 3.142×4) $= \underline{0.098}$ LB

   TOTAL WEIGHT OF REPAIR MATERIAL $\underline{0.1823}$ LB

4. SUBTRACT TOTAL IN 2 FROM TOTAL IN 3 TO FIND THE WEIGHT ADDED BY REPAIR:

   $0.1823 - 0.0477 = 0.1346$ LB.

5. REFER TO 51-80-1 THROUGH 51-80-7 FOR REBALANCING INSTRUCTIONS.

Estimated Weight of Honeycomb Repairs
Figure 2 (Sheet 1 of 3)

CORE MATERIAL		WEIGHT (LB PER CU. IN.)
POTTED REPAIR	EPOXY RESIN WITH MICROBALLOONS	0.0312 [A]
ALUMINUM	BMS 4-4 TYPE 4-07	0.0009
	BMS 4-4 TYPE 3-07	0.0012
	BMS 4-4 TYPE 4-10	0.0013
	BMS 4-4 TYPE 3-10	0.0018
	BMS 4-4 TYPE 4-15	0.0020
	BMS 4-4 TYPE 3-15	0.0025
	BMS 4-4 TYPE 4-20	0.0025
	BMS 4-4 TYPE 4-25	0.0030
	BMS 4-4 TYPE 3-20	0.0033
	BMS 4-4 TYPE 4-30	0.0035
	BMS 4-4 TYPE 3-25	0.0040
	BMS 4-4 TYPE 4-40	0.0046
	BMS 4-4 TYPE 3-30	0.0047
NONMETALLIC	HRP 3/16-4.0	0.0023
	BMS 8-124, CLASS I, TYPE I, GRADE 4.0	0.0023
	NP 3/16-112-4.5	0.0026
	HRH F/50-10-5.0	0.0029
	EC776-112-6.0	0.0035
	NP 3/16-112-9.0	0.0052

APPROXIMATE WEIGHT OF CORE MATERIALS.
TABLE I

SKIN MATERIAL		WEIGHT (LB PER SQ. IN.)
FIBERGLASS	NO. 120 CLOTH, RESIN IMPREGNATED AND CURED	0.00030
	NO. 181 CLOTH, RESIN IMPREGNATED AND CURED	0.00067
ALUMINUM ALLOY	0.010 2024 SHEET	0.0010
	0.012 2024 SHEET	0.0012
	0.016 2024 SHEET	0.0016
	0.018 2024 SHEET	0.0018
	0.020 2024 SHEET	0.0020
	0.022 2024 SHEET	0.0022
	0.025 2024 SHEET	0.0025

FIBERGLASS LAY-UP = 0.067 LB PER CU. IN.

APPROXIMATE WEIGHT OF SKIN MATERIALS
TABLE II

Estimated Weight of Honeycomb Repairs
Figure 2 (Sheet 2 of 3)

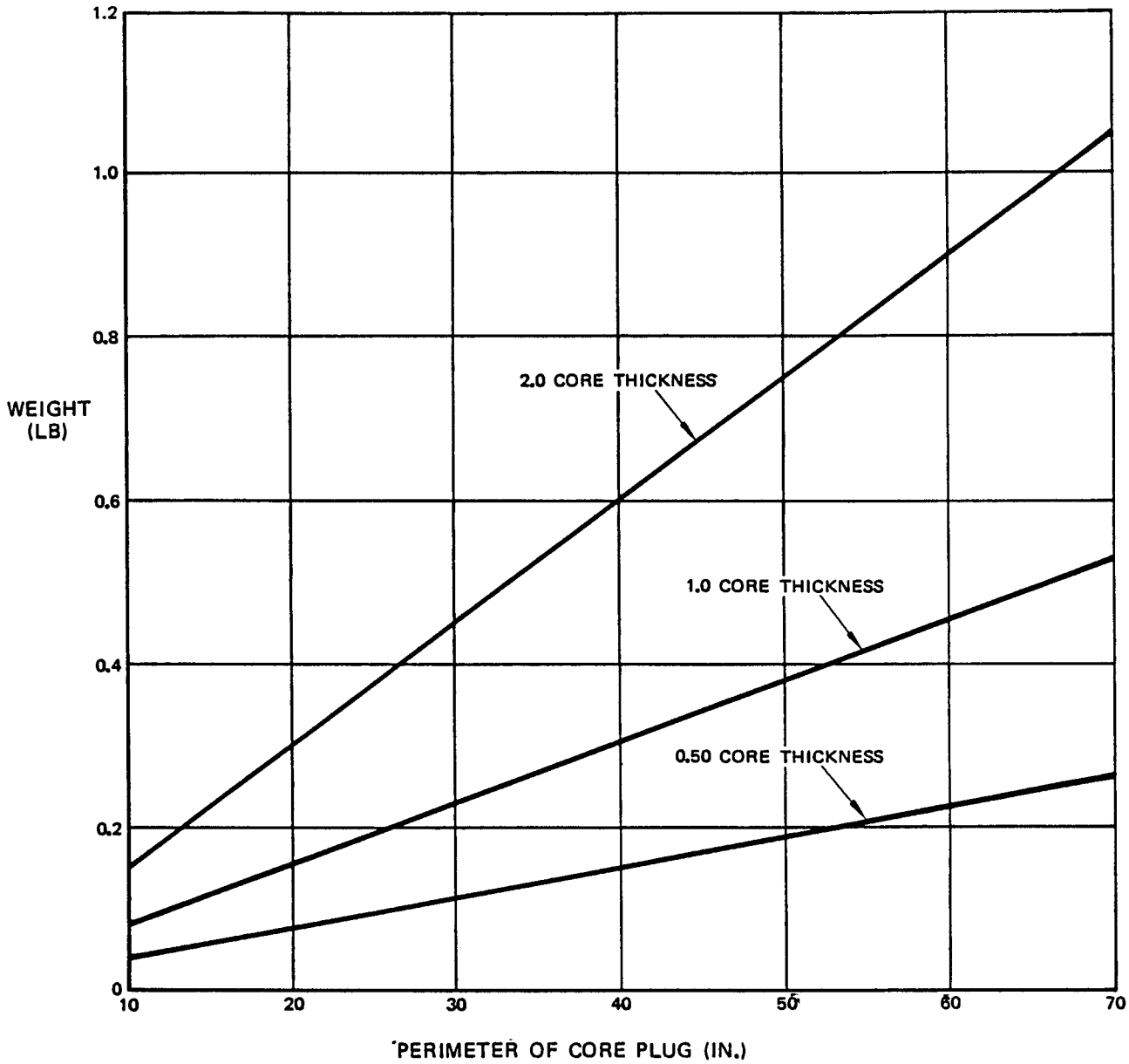

WEIGHT OF ADHESIVE FOR SPLICING CORE
TABLE III

Estimated Weight of Honeycomb Repairs
Figure 2 (Sheet 3 of 3)

FINISH	WEIGHT PER SQ FT (POUNDS)
BMS 10-11 EPOXY PRIMER, PER 0.001 INCH OF THICKNESS	0.010
BMS 10-60 OR 10-72 ENAMEL, PER 0.001 INCH OF THICKNESS	0.008
ALUMINUM FLAME SPRAY	0.085
STATIC CONDITIONER + PIN HOLE FILLER + CONDUCTIVE COATING	0.020

WEIGHT OF FINISHING MATERIAL
TABLE I

NOTE

- THE WEIGHT OF NORMAL APPLICATION OF PAINT (BOEING) IS:

WASH PRIMER (0.0004 THICK)	= 0.004 LB PER SQ FT
INTERMEDIATE PRIMER (0.0008 THICK)	= 0.008 LB PER SQ FT
ENAMEL (0.002 THICK)	= 0.016 LB PER SQ FT
TOTAL	0.028 LB PER SQ FT

- THE VARIATION OF PAINT THICKNESS IS NORMALLY WITHIN THE TOLERANCE ± 0.001 INCH.

Estimated Weight of Finish
Figure 3

AILERON BALANCING PROCEDURES (GLASS FABRIC/METAL AILERON)

WARNING: USE 51-80-1 FOR GLASS FABRIC/METAL AILERON BALANCING. USE 51-81-1 FOR GRAPHITE COMPOSITE AILERON BALANCING. FAILURE TO COMPLY CAN PRODUCE UNDESIRABLE FLUTTER AND DYNAMIC INSTABILITY WHICH COULD AFFECT FLIGHT SAFETY.

1. Balancing Requirements

   A. The aileron must be balanced so that the check balance moment lies within the limits given in Fig. 6.

2. Repairs Which Do Not Require Rebalancing

   A. Repairs to ailerons 65-46454-1, -2, -23, -24, -503 and -504 which result in an unbalanced moment of less than 0.75 pound-inches or which would require the addition of adjust weights less than 0.339 pounds, do not require balance adjustment.

   B. Ailerons 65-46454-21, -22, -31 and -32 are initially balanced with a forward CG position to provide an additional repair capability. Provided that the aileron was within the preferred check balance moment limitations shown in Fig. 6 before each repair, balance adjustment is not necessary if the unbalanced repair moment does not exceed 14.46 pound-inches after the first repair, and 12.46 pound-inches after the second repair.

   C. Repairs to ailerons of known balance condition which remain within the limits specified in Fig. 6 after the repair moment has been added or subtracted, as appropriate, do not require balance adjustment.

   D. All unbalanced moments or the balance weight requirements must be recorded and must be taken into account when a further repair or repainting is carried out. Record each occasion when the aileron has been repaired or repainted without removal for rebalancing.

3. Repairs Which May Be Rebalanced without Aileron Removal

   A. Provided that there is space for the addition of the required adjust weights, an aileron may be rebalanced without removal from the airplane if the following criteria can be met.

      (1) The moment of the repair about the hinge line does not exceed 15 pound-inches.

      (2) The weight added by the repair (weight of repair material - weight of material removed) does not exceed 1.5 pounds.

(3) The weight of material removed (or lost due to damage) and the weight of material added must be determined within the tolerance specified in figure 7. This tolerance must account for the tolerance of the weighing equipment, inaccuracy of estimation of weight of material removed, and the inaccuracy in determining the weight of repair materials. See 51-80, figures 2 and 3 for the degree of accuracy that can be achieved with careful workmanship.

(4) The distance from the hinge line to the center of gravity of the repair must be determined to within ± 0.2 inch. This tolerance must include any possible error in estimating the position of the CG, and in measuring the distance to the hinge line due to accuracy of equipment or difficulty in determining that the measurement is perpendicular to the hinge line.

(5) Not more than two consecutive repairs or repaintings will be carried out without removal of the aileron for rebalancing. A third repair or repainting necessitates rebalancing in accordance with paragraph 4.

NOTE: Repainting the entire aileron in accordance with the instructions in 51-80, paragraph 4 will meet the conditions of the above criteria.

B. Adjust the aileron balance as follows:

(1) Ensure that the accuracy criteria can be met, and that the aileron has not already been repaired twice without removal for rebalancing.

(2) Determine repair weight by subtracting weight of removed damage material from weight of material used for repair. Determine repair weights within the accuracy criteria specified in paragraph 3.A.

(3) Measure distance X from C.G. (center of gravity) of the repair area to the forward skin edge as shown in figure 2. Determine distance within ± 0.2 inch.

(4) Calculate distance Y.

$$Y = X + .65$$

(5) Calculate the required repair moment M.

M = Repair net weight in pounds times Y in inches.

(6) Calculate the aileron moment (M1) by adding the repair moment to the check balance moment before repair.

(7) If the moment of the repaired aileron falls within the range specified in Fig. 6, no balance compensation is required. Record the moment and the fact that the aileron has been repaired without removal.

(8) If the moment of the repaired aileron falls outside the range specified in Fig. 6, proceed as follows:

(a) Calculate the number of weights required.

$$\text{Number of weights} = \frac{(M1-M2)}{4.98\ (WB)}$$

where M1 = Moment of repaired aileron
M2 = Required moment from Fig. 6
WB = Weight of adjust weight (0.297 pound)

Adjust fractions of a weight to the next whole number above.

(b) Remove the aileron to gain access to the balance weights.

(c) Install Boeing balance weights 69-46492-1 or 69-38850-4 as required in the positions indicated in Fig. 1 and 2.

(d) If Boeing balance weight is not available, fabricate similar part using dimensions and materials as shown in Fig. 3. Balance weight 69-46492-1 may be obtained from the Boeing spare parts department.

(e) Record new aileron moment and the fact that the aileron has been rebalanced without removal.

New moment = M1 + (Number of weights)(0.297)(-4.98)

(9) Example of balance weight calculation.

(a) Assume that aileron 65-46454-1 has a tear in the skin and damage to the honeycomb core. The check balance moment of the aileron is -22.1 pound-inches and balance weight positions 10 through 16 are available for weight addition. The aileron has not been repaired before and the repair will be approximately 12 inches aft of the hinge line.

(b) The repair is made in accordance with 51-40-6, figure 11. The skin is cut out to a 3.6-inch diameter hole with a hole saw and weighed. The closed cells of the honeycomb core are straightened but no core is removed. The damage core is filled with potting compound, the weight of which is ascertained by weighing the compound, container and tools before and after application. Three plies of fiberglass cloth are applied, the weight of which is ascertained by weighing the cloth, resin, parting film and tools before application, and weighing any unused material, the parting film and tools after application. The completed repair is refinished over an 8-inch diameter area with primer and one coat of enamel.

(c) Check to ensure that the accuracy criteria of paragraph 3.A. have been met:

1) Requirements of 3.A.(1) and (2) are obviously met.

2) Requirements of 3.A.(3) and figure 7 are that the weight removed and added must be determined within ± 0.07 pound. The area of skin removed has been weighed to within ± 0.01 pound, so the accuracy requirement is easily met. The potting compound was weighed to within ± 0.01 pound and the fiberglass lay-up was weighed to within ± 0.01 pound. The weight of paint is calculated as shown in 51-80, figure 3. The accuracy of the weight calculation of 0.0028 inch of paint within a tolerance of ± 0.001 is:

$$\frac{\text{area in sq. ins}}{144} \times \text{weight per sq ft per } 0.001$$

Therefore tolerance is $\frac{(\pi \times 4^2)}{144} \times 0.008 = \pm\ 0.003$ lb

The total tolerance for potting compound, fiberglass lay-up and paint is therefore 0.01 + 0.01 + 0.003 = ± 0.023 pound, which is well within the permitted tolerance of ± 0.07 pound.

3) Requirement of 3.A.(4) can be met easily because the repair is small and symmetrical.

(d) Calculate net weight added:

Weight removed (actually weighed) = -0.015 pound
Weight of potting compound (actually weighed) = 0.24 pound
Weight of fiberglass lay-up (actually weighed) = 0.072 pound
Weight of paint (Ref 51-80, Fig. 3) consisting of 0.0008 inch of BMS 10-11 primer plus 0.002 inch of BMS 10-72 enamel over 8-inch diameter circle is

$$\frac{2.8 \times \pi\, 4^2}{144} \times 0.008 = 0.008 \text{ pound}$$

Therefore net weight added = 0.24 + 0.072 + 0.008 -0.015 = + 0.305 pound

(e) Measure dimension from CG of repair to forward skin edge (X) = 11.35 inches.

(f) Calculate dimension Y:
Y = X +0.65 = 11.35 + 0.65 = 12.0 inches

(g) Calculate repair moment M:
M = Repair weight x Y = 0.305 x 12.0 = +3.66 pound-inches

(h) Calculate aileron moment:
M1 = M + original check balance moment = 3.66 + (-22.1) = 18.44 pound-inches

(i) Range allowed for first repair from Fig. 6 is -36.1 to -23.65 pound-inches, therefore balance adjustment is required.

(j) Calculate the number of weights required:

$$\text{No. of weights} = \frac{-18.44 - (-23.65)}{4.98 \times 0.297} = 3.52 \text{ weights}$$

(k) Add 4 weights in positions 10, 11, 12 and 13.

(l) Calculate the new aileron moment and record it together with the fact that the aileron has been repaired and rebalanced without removal.

New moment = M1 + moment of adjust weights
= -18.44 + (4)(0.297)(-4.98) = -24.35 pound-inches

4. Balancing Procedures with Aileron Removed from Airplane

A. Mount the aileron (top surface up) on a balance jig stand and static balance fittings similar to illustration in 51-80 figure 1. See figure 1 for mounting point locations. When mounted as shown in figure 5 the aileron must be free to rotate a few degrees about the support fittings without binding (Fig 4 for the condition of the aileron for balancing.

B. With the chord plane horizontal, measure the weight reaction (WR) at dimension (B) taken at the center line of one of the tab hinges (Fig. 2).

C. Obtain a trial moment by multiplying the weight reaction (WR) in pounds by the moment arm (B) measured in inches.

Trial Moment = (WR) (B)

NOTE: Take care to observe the proper sign convention as shown in 51-80 par. 5.

D. Refer to applicable balance table I or II of figure 6, and with the trial moment value (WR) (B) as determined in par. 4.C., read off the required number of weights.

E. Install these weights as shown in the numbered positions shown in figure 1.

NOTE: Aileron balance weights must be distributed uniformly over the length of the aileron. If 9 weights are required, locate in positions 1 through 9.

F. Obtain a second trial moment (WR) (B). The required moment must lie in the range shown in Table I or II for zero number of weights. If the moment is not within the above limits, balance weights must be added or removed until the required moment is obtained.

G. Stamp the check balance moment on the Metal-Cal attached to the aileron to indicate that the proper balance moments have been obtained.

H. Example of balancing procedure for aileron 65-46454-1.

(1) Mount aileron as outlined in par. 4.A.

(2) Determine the weight reaction (WR) and the moment arm (B).

(3) Assume (WR) and (B).

(WR) = -1.42 pounds
(B) = 13.42 inches

(4) Determine (WR) (B).

(WR) (B) = -1.42 x 13.42 = -19.06 pound-inches.

(5) Refer to Table I of figure 6 and locate -19.06 pound inches between -20.16 and -18.69. The adjacent weight column indicates that 2 weights are required.

(6) Install weights in the positions 1 and 2 as shown in figure 1.

(7) Obtain a second trial moment (WR) (B).

(WR) = -1.64

(B) = 13.42

(WR) (B) = -1.64 x 13.42 = -22.01 pound-inches

(8) This moment of -22.01 pound-inches is within the required limits between -38.10 and -21.65 pound-inches of Table I.

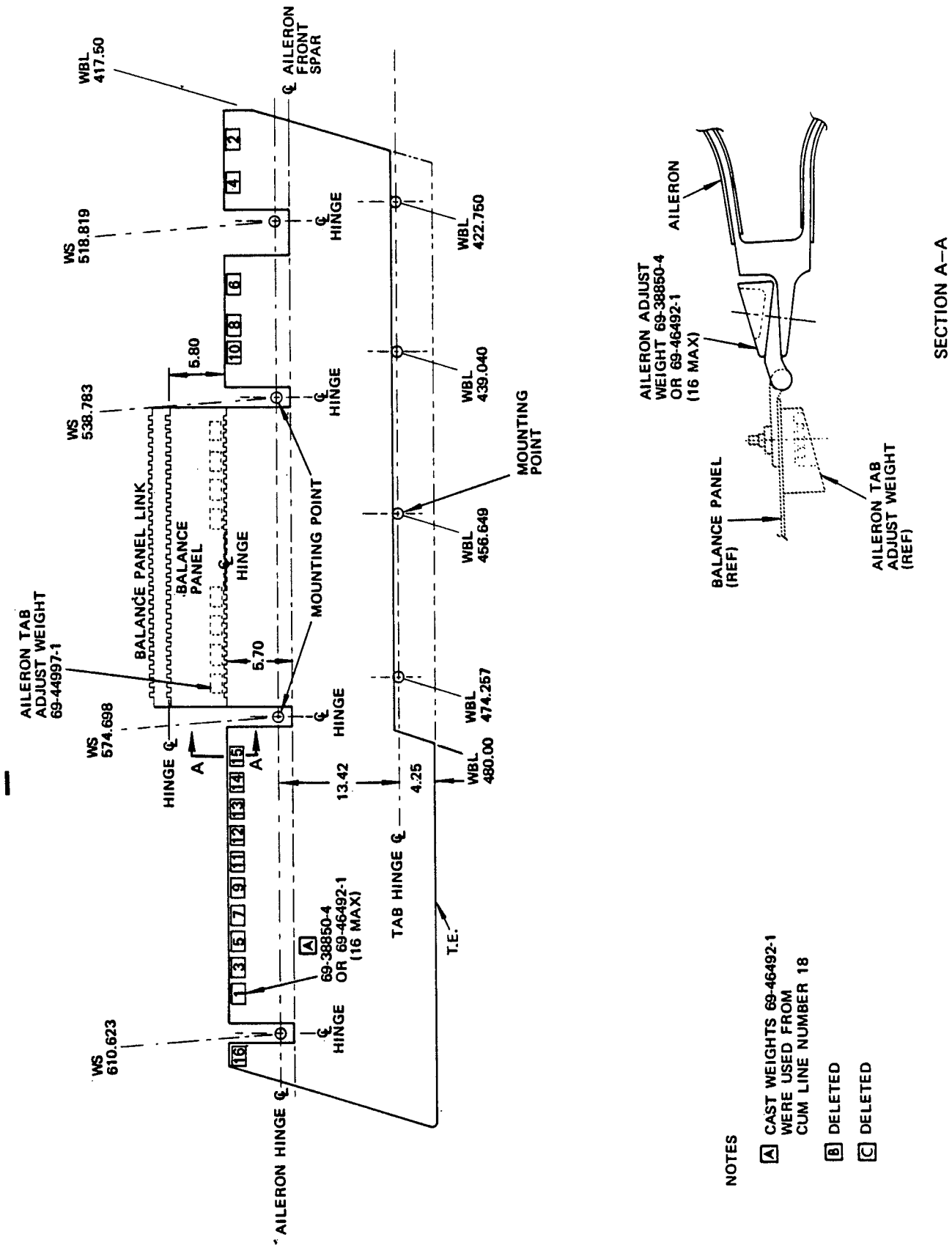

Aileron Mounting Points and Weight Location Diagram
Figure 1

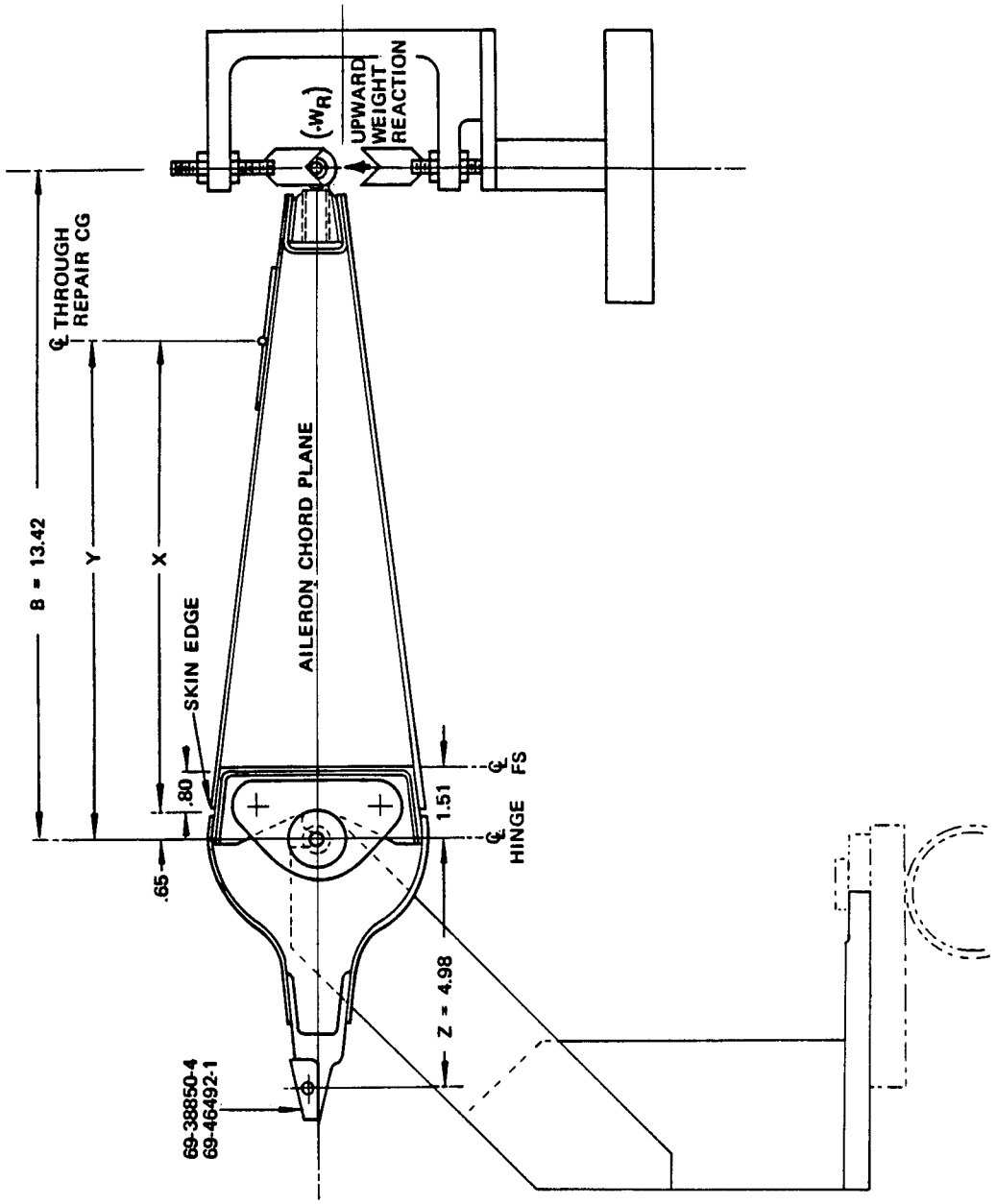

Aileron Balancing Diagram
Figure 2

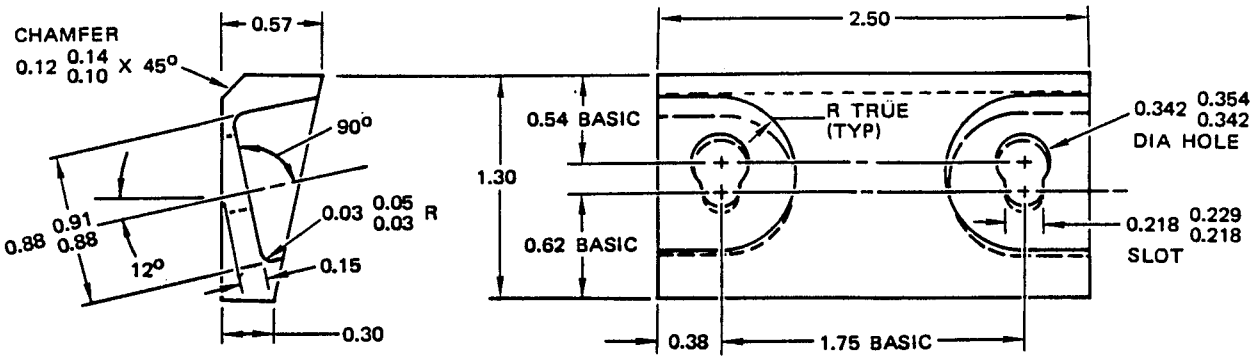

NOTE

- 69-38850-4 SHOWN
- 69-38850-4 AND 69-46492-1 (CAST WEIGHT) ARE EQUAL IN WEIGHT.
- 4130 STEEL ANNEALED CADMIUM PLATE TO MEET REQUIREMENTS OF QQ-P-416 TYPE II CLASS 2 FOLLOWED BY TWO COATS BMS 10-11 PRIMER.
- CONTROLLED WEIGHT 0.24 POUND MINIMUM, 0.31 POUND MAXIMUM.

Aileron Balance Weight
Figure 3

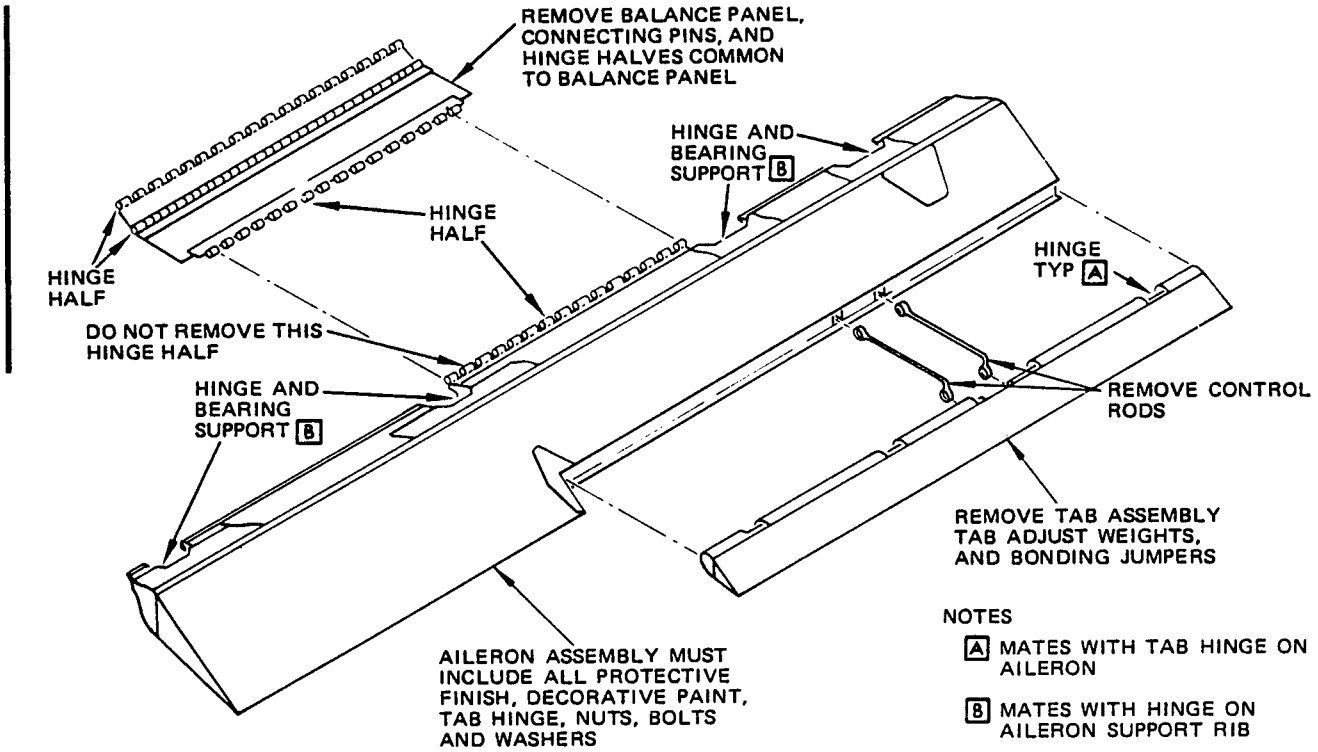

Aileron as Weighed Condition
Figure 4

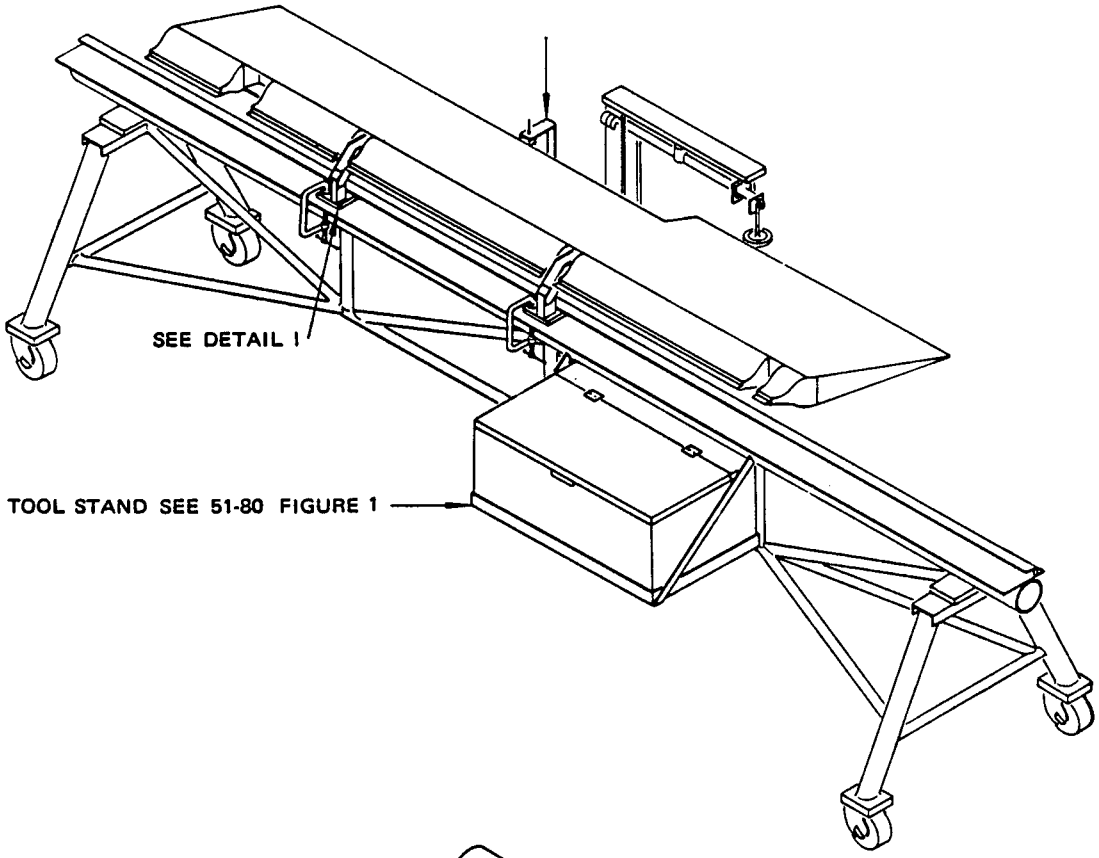

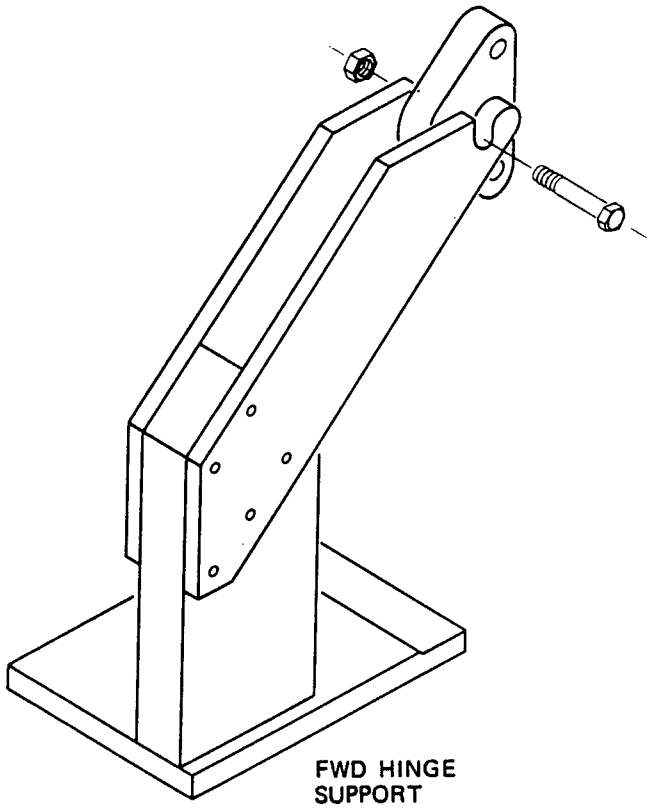

DETAIL I

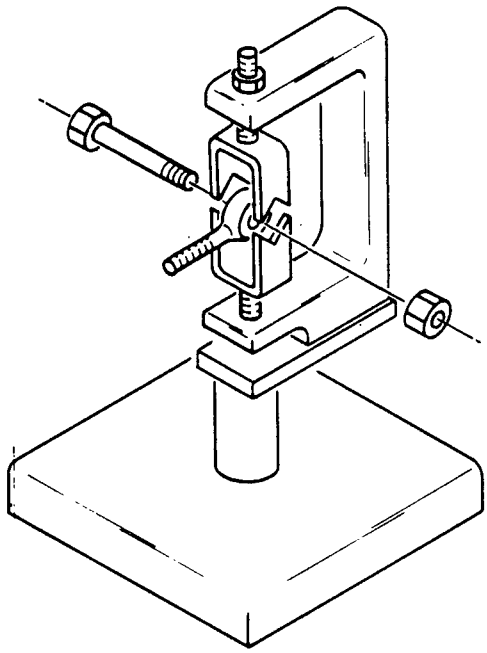

DETAIL II

Aileron Support During Balancing
Figure 5

FOR ASSEMBLY 65-46454-1, -2, -23, -24, -503, -504	
TRIAL MOMENT (W_R') (B) POUND-INCHES	NO. OF WEIGHTS REQUIRED [C] 69-46492-1 69-38850-4
-38.10 to -21.65	0 [A]
-21.64 to -20.17	1
-20.16 to -18.69	2
-18.68 to -17.21	3
-17.20 to -15.73	4
-15.72 to -14.25	5
-14.24 to -12.77	6
-12.76 to -11.29	7
-11.28 to - 9.81	8
- 9.80 to - 8.33	9
- 8.32 to - 6.85	10
- 6.84 to - 5.37	11
- 5.36 to - 3.89	12
- 3.88 to - 2.41	13
- 2.40 to - 0.93	14
- 0.92 to + 0.55	15
+ 0.56 to + 2.03	16

TABLE I

FOR ASSEMBLY 65-46454-21, -22	
TRIAL MOMENT (W_R) (B) POUND-INCHES	NO. OF WEIGHTS REQUIRED [C] 69-46492-1 69-38850-4
-38.10 to -36.63	0 [B]
-36.62 to -35.15	1
-35.14 to -33.67	2
-33.66 to -32.19	3
-32.18 to -30.71	4
-30.70 to -29.23	5
-29.22 to -27.75	6
-27.74 to -26.27	7
-26.26 to -24.79	8
-24.78 to -23.31	9
-23.30 to -21.83	10
-21.82 to -20.35	11
-20.34 to -18.87	12
-18.86 to -17.39	13
-17.38 to -15.91	14
-15.90 to -14.43	15
-14.42 to -12.95	16

TABLE II

Aileron Balance Weight Requirements
Figure 6 (Sheet 1)

FOR ASSEMBLY 65–46454–31, –32	
TRIAL MOMENT (WR) (B) POUND–INCHES	NO. OF WEIGHTS [C] REQUIRED 69–46492–1 69–38850–4
–38.10 TO –29.88	0 [D]
–29.87 TO –28.40	1
–28.39 TO –26.92	2
–26.91 TO –25.44	3
–25.43 TO –23.96	4
–23.96 TO –22.48	5
–22.47 TO –21.00	6
–20.99 TO –19.52	7
–19.51 TO –18.04	8
–18.03 TO –16.56	9
–16.55 TO –16.08	10
–15.07 TO –13.60	11
–13.59 TO –12.12	12
–12.11 TO –10.64	13
–10.63 TO –9.16	14
–9.15 TO –7.68	15
–7.67 TO –6.20	16

TABLE III

AILERON PART NUMBER	ALLOWABLE CHECK BALANCE MOMENT RANGE	
	FIRST REPAIR	SECOND REPAIR
65–46454–1, –2	–36.1 TO –23.65	–34.1 TO –25.65
65–46454–21, –22, –31, –32		
65–46454–23, –24		
65–46454–503, –504		

CHECK BALANCE MOMENT RANGES FOR BALANCE ADJUSTMENT ON AIRPLANE.

TABLE IV

Aileron Balance Weight Requirements
Figure 6 (Sheet 2)

NOTES

[A] THE REQUIRED CHECK BALANCE MOMENT FOR THE AILERON ASSY 65-46454-1, -2, -23, -24, -503 AND -504 IS -29.87 (± 8.22) POUND-INCHES; THEREFORE, IF THE CHECK BALANCE MOMENT IS BETWEEN -38.10 AND -21.65 POUND-INCHES NO ADJUST WEIGHTS ARE NEEDED. WHEN REPAIR IS BEING MADE WITH THE AILERON INSTALLED ON THE AIRPLANE THE REVISED CHECK BALANCE MOMENTS SHOWN IN TABLE IV MUST BE USED.

[B] THE PREFERRED CHECK BALANCE MOMENT FOR AILERON ASSY 65-46454-21 AND -22 IS -38.10 TO -36.63 POUND-INCHES; HOWEVER, IF THE CHECK BALANCE MOMENT IS BETWEEN -38.10 AND -21.65 POUND-INCHES THE AILERON IS SATISFACTORY. WHEN REPAIR IS BEING MADE WITH THE AILERON INSTALLED ON THE AIRPLANE THE REVISED CHECK BALANCE MOMENTS SHOWN IN TABLE IV MUST BE USED.

[C] SEE FIGURE 1 FOR AIRPLANE EFFECTIVITY

[D] THE PREFERRED CHECK BALANCE MOMENT FOR AILERON ASSY 65-46454-31 AND -32 IS -38.10 TO -29.88 POUND-INCHES. HOWEVER, THE AILERON IS SATISFACTORY IF THE CHECK MOMENT BALANCE IS BETWEEN -38.1 and -21.7 POUND INCHES. USE REVISED CHECK BALANCE MOMENTS PER TABLE IV FOR REPAIRS BEING MADE WHEN THE AILERON IS INSTALLED ON THE AIRPLANE.

Aileron Balance Weight Requirements
Figure 6 (Sheet 3)

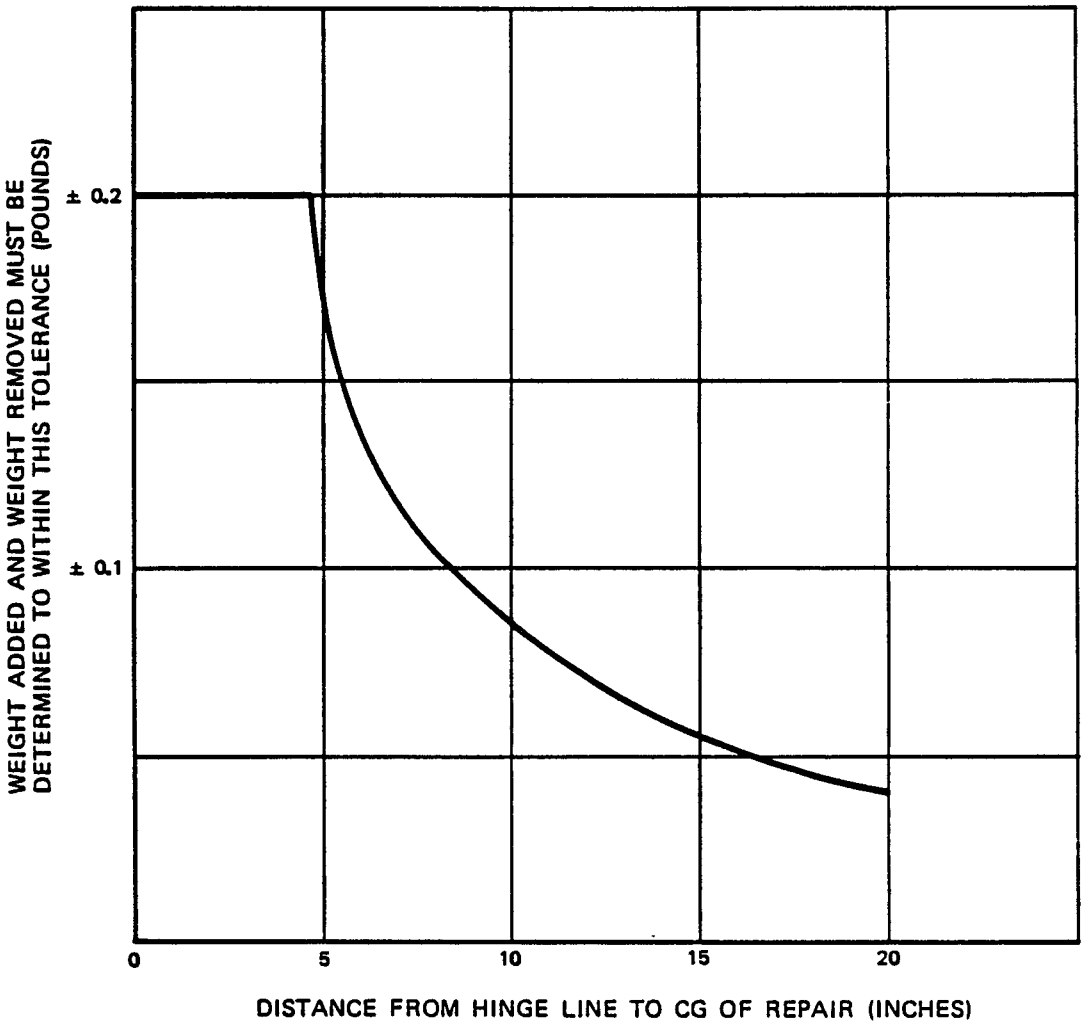

Weight Tolerance Requirements for Balancing Aileron on Airplane
Figure 7

AILERON BALANCE PANEL PROCEDURES (GLASS FABRIC/METAL AILERON)

WARNING: USE 51-80-2 FOR GLASS FABRIC/METAL AILERON BALANCE PANEL PROCEDURES. USE 51-81-2 FOR GRAPHITE COMPOSITE AILERON BALANCE PANEL PROCEDURES. FAILURE TO COMPLY CAN PRODUCE UNDESIRABLE FLUTTER AND DYNAMIC INSTABILITY WHICH COULD AFFECT FLIGHT SAFETY.

1. Weight Requirements

   A. The balance panel itself is not balanced, but its weight effects the balance of the aileron, consequently the weight of the panel is limited to 3.43 (± 0.12) pounds.

   B. For the condition of the balance panel for weighing see Fig. 1.

   C. Where repairs would result in the panel weight being in excess of the maximum permitted in 1.A. above, the panel must be changed for one of the correct weight.

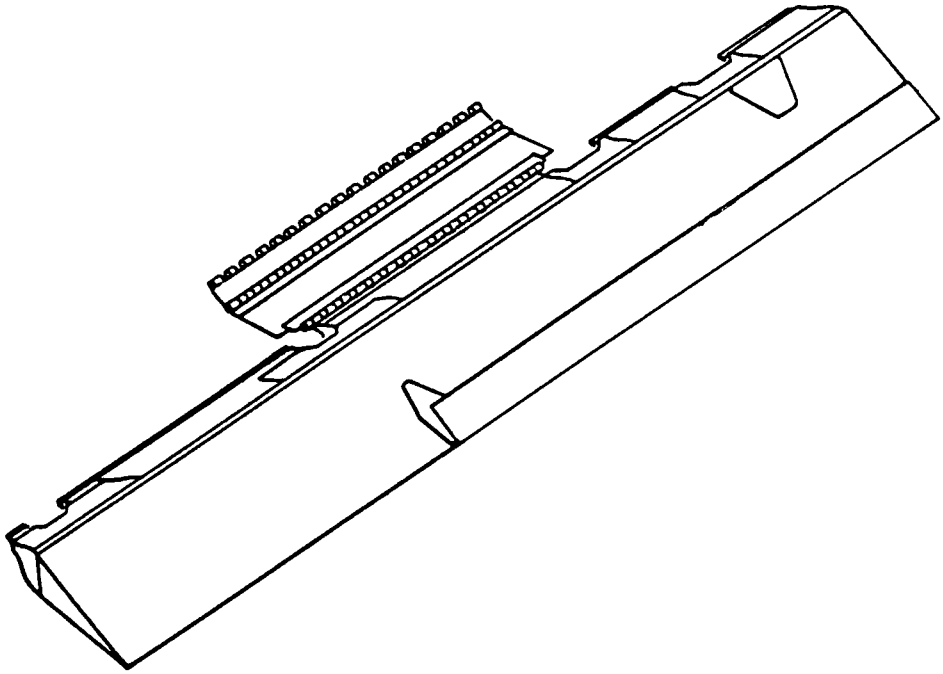

NOTE

- HINGE HALF 65-46458-4 MAY BE ON IF WEIGHT REQUIREMENT OF 3.94 ± .12 POUNDS IS MET.

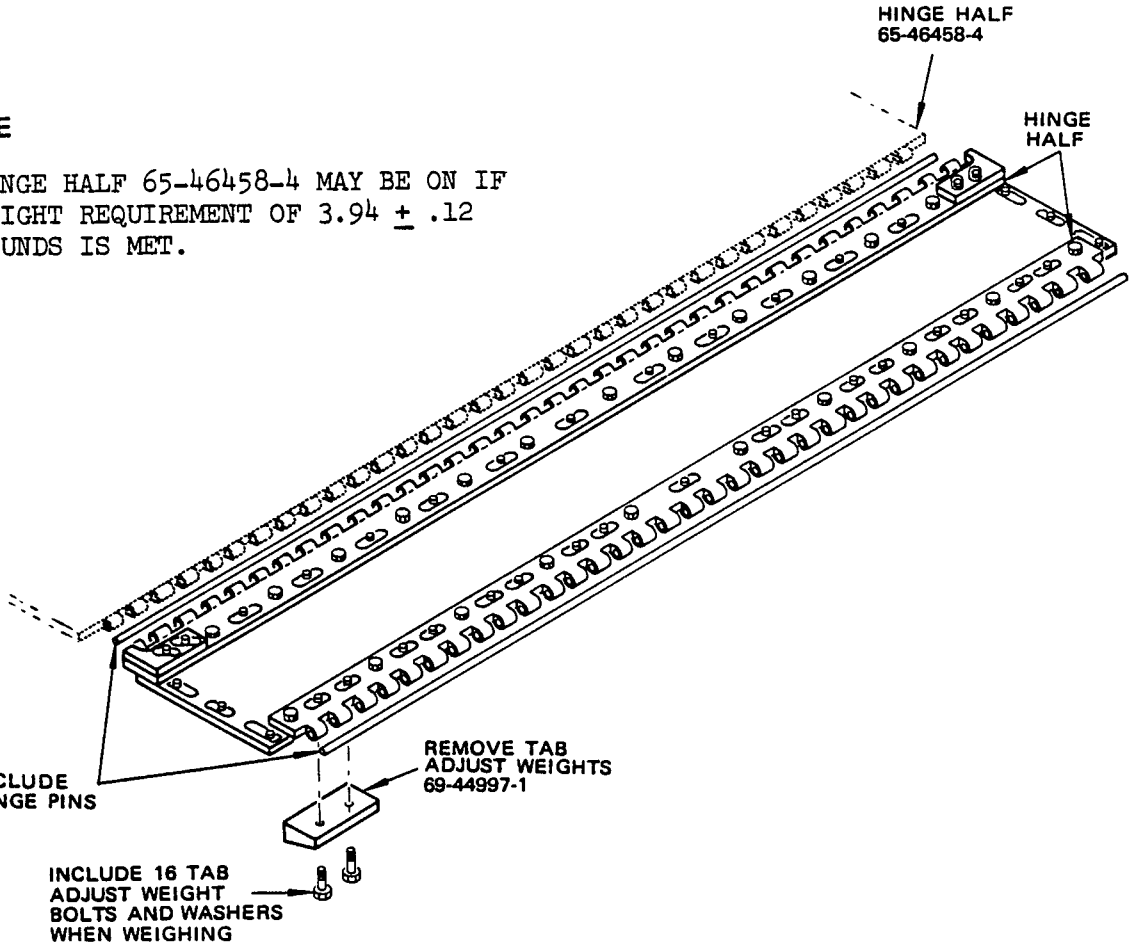

Aileron Balance Panel as Weighed Condition
Figure 1

AILERON TAB BALANCE PROCEDURE (GLASS FABRIC/METAL AILERON)

1. Adjustment of Aileron Balance for Change in Tab Weight

A. The aileron tab (65-46455) is not balanced but its weight affects the balance of the aileron; consequently, the tab weight must be in the range of 1.91 to 3.0 pounds. In the aileron balance system, tab adjust weights (69-44997-1, -2, or 69-67500-1) are mounted on the balance panel and balance out variations in the tab weight. For a given total tab weight, a specified total number of adjust weights is called out. For example, a heavier tab requires a greater number of adjust weights (see Table in Fig. 1).

NOTE: The adjust weights do not balance out the entire weight of the tab, but only that portion above a certain base weight.

B. Although the adjust weights are mounted on the balance panel, they are considered part of the tab, and must never be separated from it. At time of installation on the surface, the adjust weights must be mounted on the balance panel in their correct locations (see Fig. 2).

NOTE: Due to the importance of the tab weight, the actual weight of the tab and number of adjust weights shall be stamped on the tab per drawing.

C. For the condition of the tab for weighing, see Fig. 3.

NOTE: If the tab is reworked (repaired or painted) it must be reweighed, stamped with the new actual weight and adjust weights, and provided with the correct number of adjust weights.

D. If Boeing tab adjust weights are not available make parts using the dimensions and material shown in Fig. 1.

USE FOR AILERON TAB 65-46455	
TOTAL TAB WEIGHT (POUNDS)	TOTAL NUMBER OF ADJUST WEIGHTS REQUIRED (69-44997-1,-2, OR 69-67500-1)
1.91 TO 2.00	1
2.01 TO 2.10	2
2.11 TO 2.20	3
2.21 TO 2.30	4
2.31 TO 2.40	5
2.41 TO 2.50	6
2.51 TO 2.60	7
2.61 TO 3.00	8

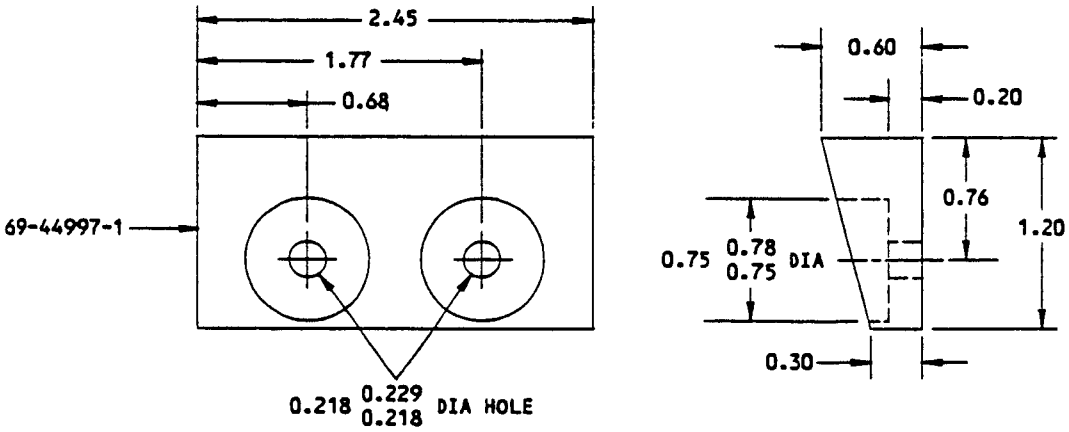

NOTES

- CORNER RADII 0.03 $^{0.06}_{0.00}$
- FILLET RADII 0.03 $^{0.05}_{0.03}$
- MATERIAL AISI STEEL AMS 5362 ANNEALED. CADMIUM PLATE TO MEET REQUIREMENTS OF QQ-P-416 TYPE I CLASS 2 AND APPLY ONE COAT OF BMS 10-11 TYPE 1 PRIMER

Aileron Tab Adjust Weight Requirements
Figure 1

204285

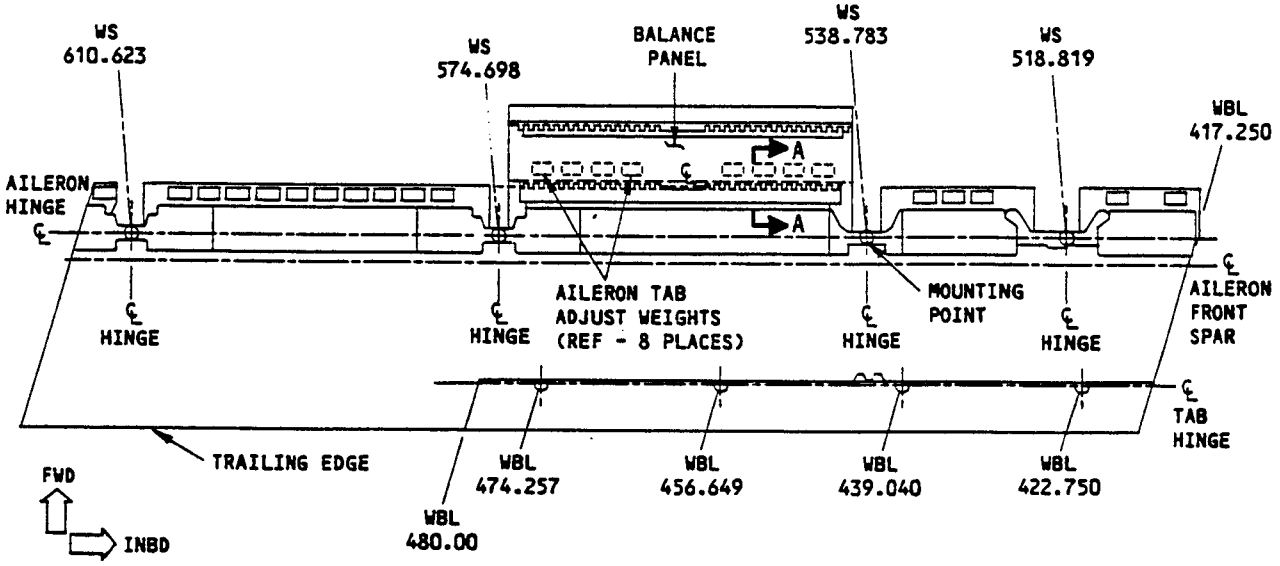

LEFT HAND TOP VIEW [A]

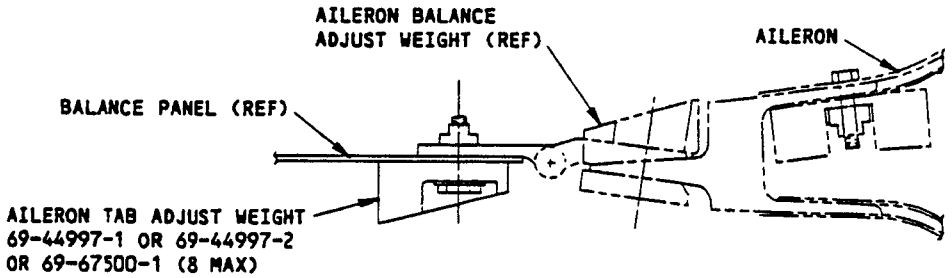

SECTION A-A

NOTES

[A] GRAPHITE COMPOSITE AILERON SHOWN
GLASS/METAL SIMILAR

Aileron Tab Adjust Weight Location Diagram
Figure 2

204291

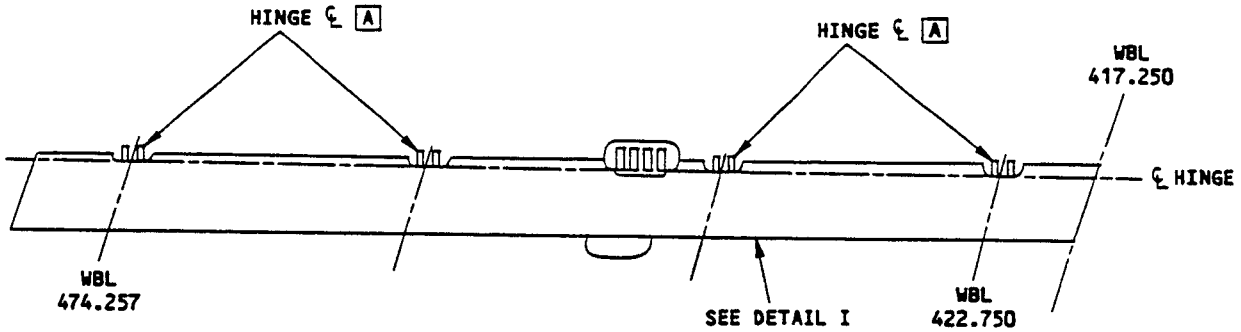

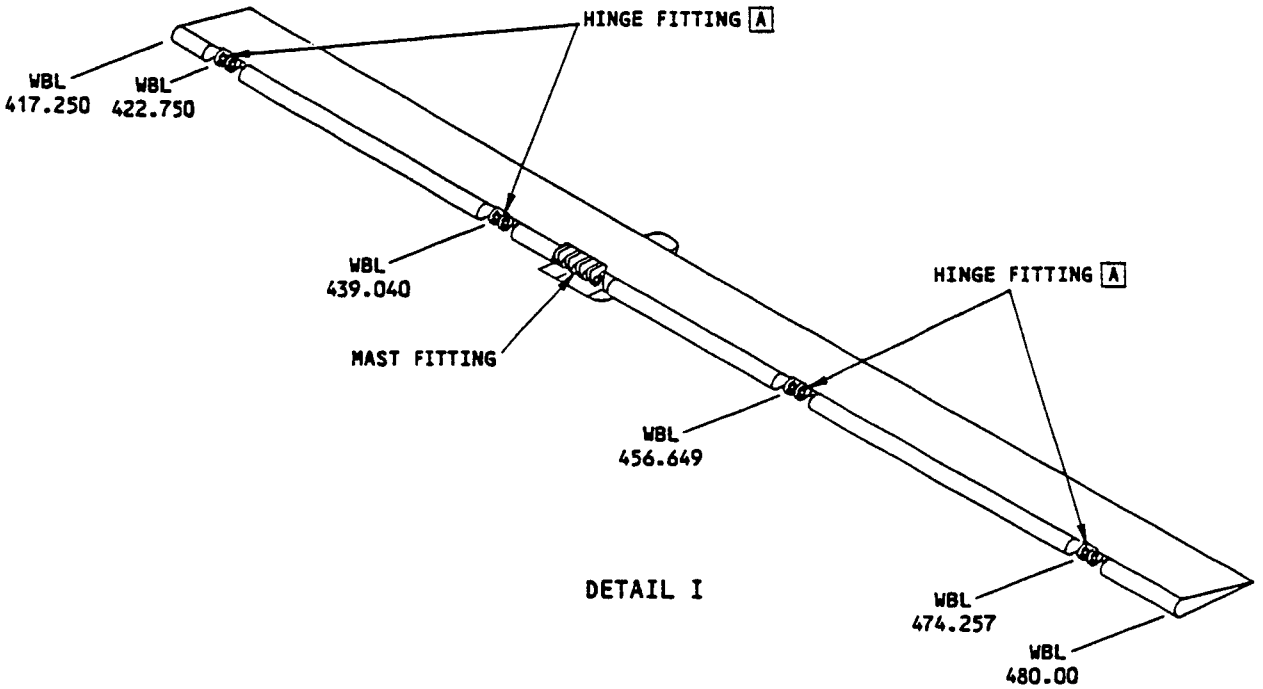

DETAIL I

NOTES

- THE AILERON TAB SHALL BE A COMPLETE ASSEMBLY PER 65-46455 AND SHALL INCLUDE ALL PROTECTIVE FINISHES AND DECORATIVE PAINT
- DO NOT INCLUDE BONDING JUMPERS AND THEIR FASTENERS; OR INSTALLATION BOLTS, NUTS, AND WASHERS THAT ATTACH THE TAB TO THE AILERON AT THE HINGES; OR CONTROL RODS AND THEIR INSTALLATION BOLTS, NUTS, AND WASHERS; OR AILERON TAB ADJUST WEIGHTS

A TAB HINGE MATES WITH AILERON TAB HINGE ON AILERON

Aileron Tab As-Weighed Condition
Figure 3

204287

ELEVATOR BALANCING PROCEDURES

1. Balancing Requirements

   A. The elevator must be balanced so that the check balance moment lies within the limits given in Fig. 6. The limits vary with different combinations of elevator and tab, and with the number of times the elevator has been repaired without removal, so care must be taken to ensure that the correct figures are used.

2. Repairs Which Do Not Require Rebalancing

   A. Repairs to elevators listed in Fig. 6, Table I, II or III, which result in an unbalanced moment less than 1.75 pound-inches do not require balance adjustment.

   B. Repairs to elevators of known balance condition which remain within the limits specified in Fig. 6 after the repair moment has been added or subtracted, as appropriate, do not require balance adjustment.

   C. All unbalanced moments must be recorded and must be taken into account when a further repair or repainting is carried out. Record each occasion when elevator has been repaired without removal for rebalancing.

3. Repairs Which May Be Rebalanced without Removal of Elevator

   A. Provided that there is space for the addition of the required adjust weights, an elevator may be rebalanced without removal from the airplane if the following criteria can be met.

      (1) The moment of the repair about the hinge line does not exceed 40 pound-inches.

      (2) The weight added by the repair (weight of repair material - weight of material removed) does not exceed 3 pounds.

BOEING PROPRIETARY - Copyright © - Unpublished Work - See title page for details.

(3) The weight of material removed (or lost due to damage) and the weight of material added must be determined within the tolerance specified in Fig. 7. This tolerance must account for the tolerance of the weighing equipment, inaccuracy of estimation of weight of material removed, and the inaccuracy in determining the weight of repair materials. Refer to 51-80, Fig. 2 and 3 for the degree of accuracy that can be achieved with careful workmanship.

(4) The distance from the hinge line to the center of gravity of the repair must be determined to within ± 0.2 inch. This tolerance must include any possible error in estimating the position of the CG, and in measuring the distance to the hinge line due to accuracy of equipment or difficulty in determining that the measurement is perpendicular to the hinge line.

(5) Not more than two consecutive repairs or repaintings will be carried out without removal of the elevator for rebalancing. A third repair or repainting necessitates rebalancing in accordance with par. 4.

NOTE: Repainting the entire elevator in accordance with the instructions in 51-80, par. 4 will meet the conditions of the above criteria.

(6) Where the damage to be repaired is confined to delamination of the skin plies, the chart shown in Fig. 8 may be used in place of the criteria listed in (1) thru (4).

B. Adjust the elevator balance as follows:

(1) Ensure that the accuracy criteria can be met, and that the elevator has not already been repaired twice without removal for rebalancing.

(2) Determine repair weight by subtracting weight of removed material from weight of material used for repair. Determine repair weight within the accuracy criteria specified in par. 3.A.

(3) Measure distance X from CG (center of gravity) of the repair area to the rivet as shown in Fig. 2 and determine Y. Y = X +.56. Refer to par. 3.A. for accuracy criteria.

(4) Calculate the required repair moment M.

M = Repair net weight in poinds times Y in inches

(5) Calculate the new elevator moment by adding the repair moment to the check balance moment before repair.

(6) If the moment of the repaired elevator falls within the range allowed in Fig. 6, no balance compensation is required. Record the moment and the fact that the elevator has been repaired without removal.

BOEING PROPRIETARY - Copyright © - Unpublished Work - See title page for details.

(7) If the moment of the repaired elevator falls outside the range allowed in Fig. 6, proceed as follows:

(a) Remove the stabilizer trailing edge panels to gain access to the leading edge of the elevator. Note which adjust weight positions are available.

NOTE: Normally weights should be installed in sequence, starting with bay 2, then proceeding to bay 3, and where applicable, to bay 4. Due to installation difficulties on an installed elevator, weights may be added out of sequence in order to utilize available positions on the underside of bays 3 and 4.

(b) Using Fig. 1, detail I, II or III, determine where the new weights should be added and calculate the number of weights to be added by using the appropriate formula below. Adjust fractions of a weight to the next whole number above.

$$\text{Bay 2 -- No. of Weights} = \frac{M1 - M2}{9.63 \times WB}$$

$$\text{Bay 3 -- No. of Weights} = \frac{M1 - M2}{8.33 \times WB}$$

$$\text{Bay 4 -- No. of Weights} = \frac{M1 - M2}{7.05 \times WB}$$

Where M1 = Required elevator moment from Fig. 6

M2 = Moment of repair elevator (See 3.B.(5).)

WB = Weight of adjust weight = 1 pound

(c) Install the adjust weights. If Boeing balance adjust weights are not available fabricate similar parts using dimensions and material as shown in Fig. 3.

(d) Record new elevator moment and the fact that the elevator has been rebalanced without removal.

New moment = M2 + moment of adjust weights

Moment of adjust weights is the number of weights added multiplied by:

-9.63 for Bay 2
-8.33 for Bay 3
-7.05 for Bay 4

BOEING PROPRIETARY - Copyright © - Unpublished Work - See title page for details.

(8) Example of balance weight calculation

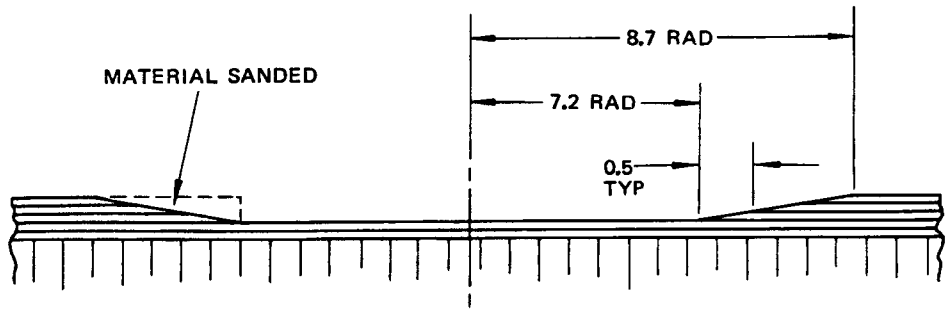

NOTE: FOR EXAMPLE A 7.2 INCH RAD CIRCULAR SHAPE IS USED, BUT REPAIR COULD BE ANY SHAPE.

(a) Elevator 65-73784-5, with tab 65-73799-3 has a delamination affecting 3 plies of the outer skin. It is to be repaired in accordance with 51-40-9, par. 5. The area of skin to be removed is 163 square inches, and is 19.0 inches aft of the hinge line. All of the balance weight positions in Bay 3 are available. The check balance moment before repair is +112.90 pounds-inches. One previous repair has already been made to the elevator without removal from the airplane.

(b) As the repair is for a simple delamination that does not affect the core, Fig. 8 can be used to determine whether the repair and rebalancing can be made on the airplane, instead of the detailed accuracy check specified in par. 3.A. Figure 8 permits a maximum of 185 square inches for a 3-ply delamination. 19.0 inches aft of the hinge line, so it is permissible to repair the elevator without removal from the airplane.

(c) Calculate weight removed:

1) Skin plies cut out (including paint) = 0.18 pound actually weighed.

2) Material removed by sanding:

Weight = cross section of sanded area x perimeter at centroid x density

Cross section = 1/2 (3 plies x 0.0045) (8.7 - 7.2) = 0.010

BOEING PROPRIETARY - Copyright © - Unpublished Work - See title page for details.

Perimeter at centroid = $2\pi\left(7.2 + \frac{8.7 - 7.2}{3}\right) = 48.38$

Density = 0.067 pounds per cubic inch

Therefore weight = 0.010 x 48.38 x 0.067 = 0.032 pound

3) Paint removed over sanded area (paint thickness determined with bar type micrometer and found to be 0.0055 inch):

$$\text{Weight} = \frac{\text{Thickness (thousandths of inch) x Weight per sq ft per 0.001 x area in sq in.}}{144}$$

$$= \frac{5.5 \times 0.008 \times (8.7^2 - 7.2^2)\,\pi}{144} = 0.022 \text{ pound}$$

4) Total weight removed = 0.18 + 0.032 + 0.022 = 0.234 pound

(d) Calculate weight added:

1) Skin plies (3 type 181 at 0.00067 pounds per ply per sq in.)

Weight = $([\pi\, 7.7^2] + [\pi\, 8.2^2] + [\pi\, 8.7^2])\ 0.0067 = 0.425$ lb

2) Paint (a circular area, 20-inch diameter, 0.003 inch thick is repainted).

$$\text{Weight} = \frac{\text{Thickness (thousandths of inch) x Weight per sq ft per 0.001 x area in sq in.}}{144}$$

$$= \frac{3 \times 0.008 \times \pi\, 10^2}{144} = 0.052 \text{ pound}$$

3) Total weight added = 0.425 + 0.052 = 0.477 pound

(e) Calculate weight increase:

Net weight added = 0.477 - 0.234 = 0.243 pound

(f) Measure dimension X from CG of repair to rivet centerline = 18.44 inch.

BOEING PROPRIETARY - Copyright © - Unpublished Work - See title page for details.

C02740

(g) Calculate dimension Y:

$$Y = X + 0.56 = 19.0 \text{ inches}$$

(h) Calculate repair moment:

$$\text{Repair moment} = Y = X \text{ net weight added} = 19.0 \times 0.243 = 4.62 \text{ pound-inches}$$

(i) Calculate elevator moment:

$$\text{Elevator moment} = \text{Moment before repair} + \text{repair moment} = 112.90 + 4.62 = 117.52 \text{ pound inches}$$

(j) As the elevator moment is now outside the permitted range shown in Fig. 6 for second repair (+78.3 to +109.3 pound-inches), balance adjustment must be made.

(k) Space is available for addition of weights in Bay 3, therefore the number of weights required to balance to the middle of the permitted range is:

$$\frac{117.52 - 1/2\,(109.3 + 78.3)}{8.33 \times 1.0} = 2.78$$

Therefore 3 weights will be required.

(l) Calculate the new elevator moment and record it together with the fact that there have now been two repairs carried out without removal from the airplane.

$$\text{New moment} = M2 + \text{moment of adjust weights}$$

$$= 117.52 + (3)(-8.33)(1.0) = 92.53 \text{ pound-inches}$$

4. Balancing Procedure with Elevator Removed from Airplane

A. Mount the elevator (top surface up) on a balance jig stand as illustrated in 51-80. See Fig. 1 for mounting locations. When mounted as shown in Fig. 5 the elevator must be free to rotate a few degrees about the support fittings without binding. See Fig. 4 for the condition of elevator for balancing.

B. With the chord plane horizontal, measure the weight reaction (WR) at dimension (B) taken at the center line of one of the tab hinges as shown in Fig. 2. Use rear mounting point at either elevator station 94.07 or 121.59.

C. Obtain a trial moment by multiplying the weight reaction (WR) (measured in pounds) by the moment arm (B).

(1) Trial Moment = (WR) (B)

BOEING PROPRIETARY - Copyright © - Unpublished Work - See title page for details.

D. Refer to the applicable Elevator Balance Tables of Fig. 6 and read off the number of weights required.

E. Install these weights on elevator in Bays 2, 3 or 4 as shown in Fig. 1. Bay 2 must be filled completely before weights are installed in Bay 3 and 4.

NOTE: Where the elevator has been previously rebalanced without removal from the airplane it is possible that adjust weights have been added out of sequence. The tables shown in Fig. 6 are based on in-sequence installation of weights. To permit the tables to be used, adjust weights must be reinstalled in their correct locations. Alternately, instead of using the tables, the moments of the adjust weights can be calculated as described in par. 3.B.(7)(b).

F. Obtain a second trial moment (WR) (B). The required moment must lie between the limits shown in Fig. 6 for the appropriate elevator and tab combination. If the moment is not within these limits, weights must be added or removed until the required moment is obtained.

G. Stamp the check balance moment on the Metal-Cal attached to the elevator to indicate that the proper balance moments have been obtained.

H. Example of balancing procedure for elevator 65-73784-1 with tab 65-73799-3.

(1) Mount the elevator as outlined in par. 4.A.

(2) Determine weight reaction (WR) and moment arm (B).

(WR) = 6.50 pounds and (B) = 22.31 inches

(3) Determine (WR) (B).

(WR) (B) = 6.50 x 22.31 = 145.0 pound-inches

(4) See Fig. 6, Table I and locate 145.0 between 138.95 and 148.76. In column for Bay 2, select weights.

(5) Install 3 weights in the bay 2, 3, 69-53211-1 as indicated in Fig. 1.

(6) Obtain a second moment (WR) (B).

(WR) (B) = x 5.17 x 22.31 = +115.34 pound-inches

This moment is well within the required limits between 68.3 and 119.3 pound-inches as shown in Fig. 6, Table I.

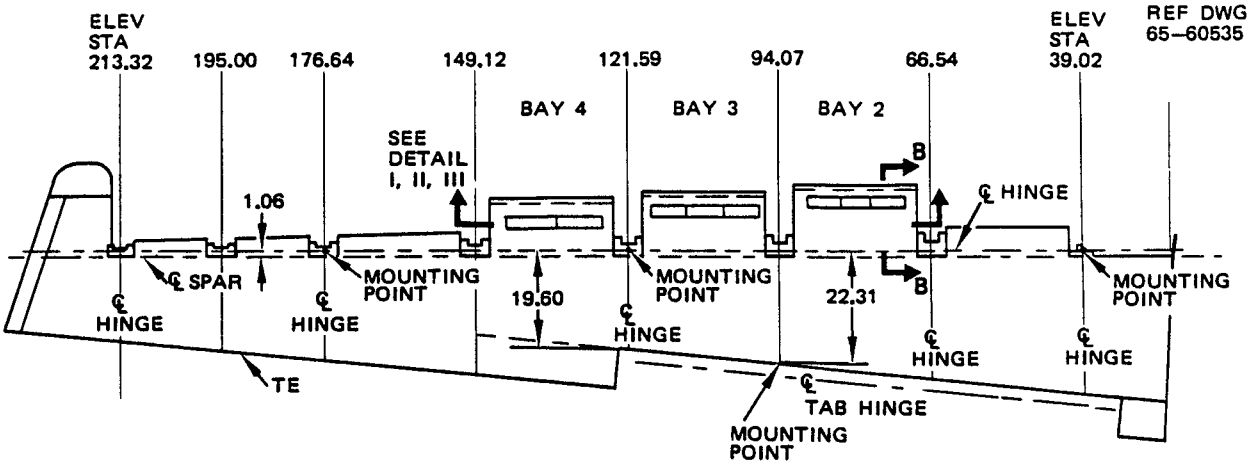

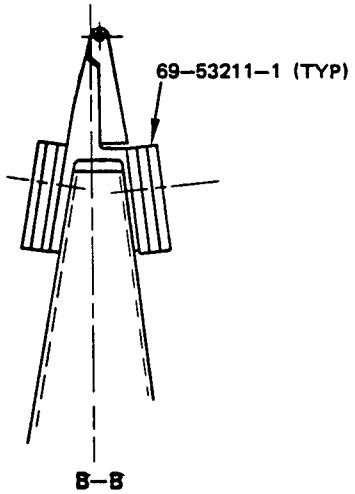

NOTES

- THE GRIP LENGTH OF BOLT DEPENDS ON NUMBER OF BALANCE WEIGHTS USED AND SHALL BE DETERMINED AS FOLLOWS:

NO. OF BAL WT USED	PART NO. OF BOLT TO BE USED
NONE	BACB30NF3-2
1	BACB30NF3-4
2	BACB30NF3-7
3	BACB30NF3-10

- THE GRIP LENGTH AND SIZE OF RIVET DEPENDS ON NUMBER OF BALANCE WEIGHTS USED AND SHALL BE DETERMINED AS FOLLOWS:

NO. OF BAL WT USED	PART NO. OF RIVET TO BE USED
NONE	NAS1398B5-3
1	NAS1398B6-5
2	NAS1398B6-8
3	NAS1398B6-10

[A] THE MAX QUANTITIES OF 69-53211-1 WEIGHTS ARE AS SHOWN. SEE FIGURE 6 FOR THE REQUIRED QUANTITIES

Elevator Mounting Points and Balance Weights Location Diagram
Figure 1 (Sheet 1)

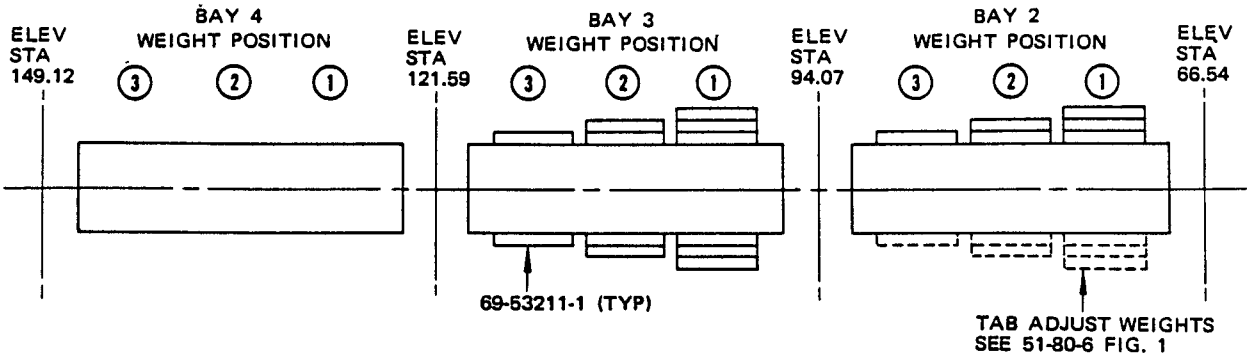

65-60535-1 AND -2

DETAIL I [A]

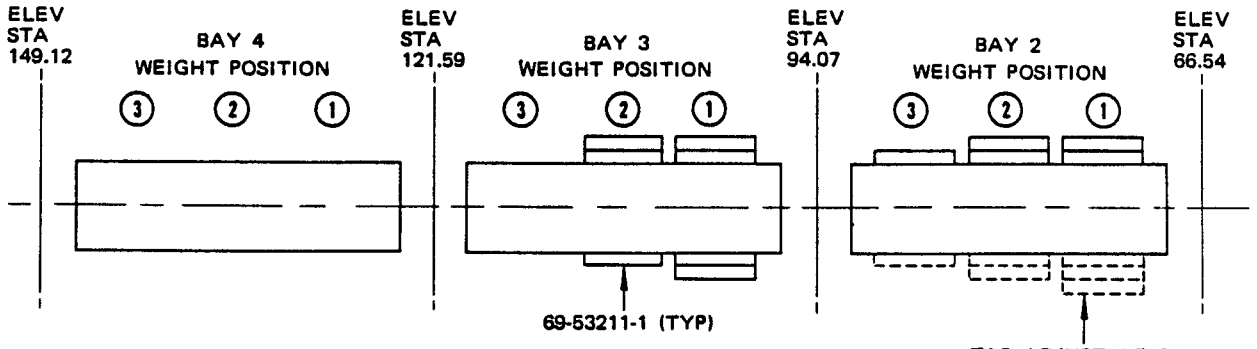

65-60535-5, -6

DETAIL II [A]

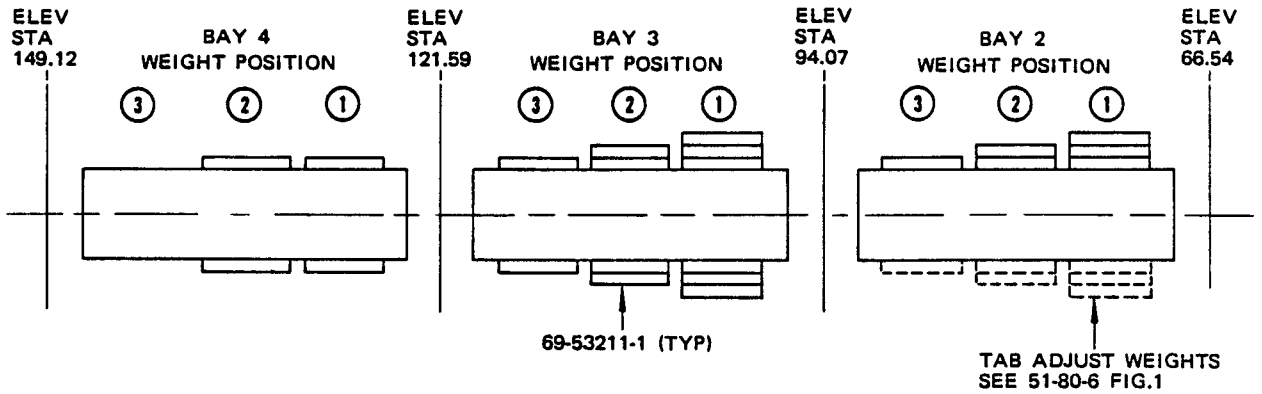

65-60535-7 AND -8, -9 AND -10

DETAIL III [A]

Elevator Mounting Points and Balance Weights Location Diagram
Figure 1 (Sheet 2)

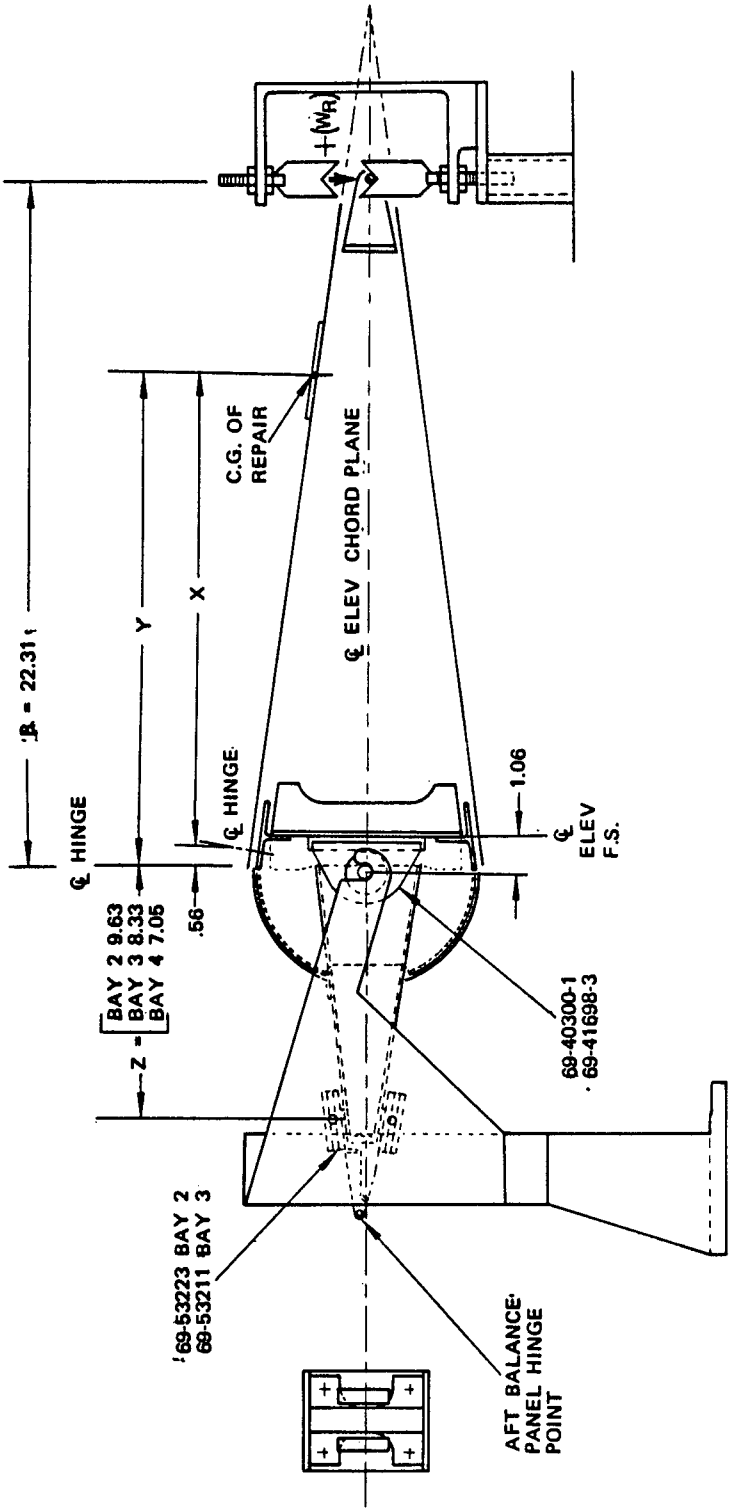

Elevator Balancing Diagram
Figure 2

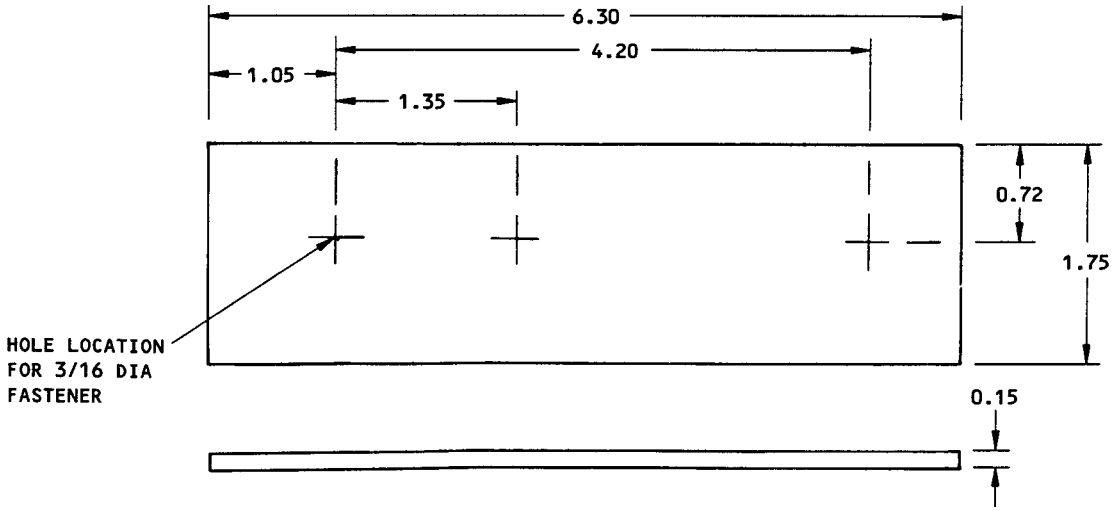

NOTE

PART NO. 69-53211

- MATERIAL SINTERED TUNGSTEN ALLOY TYPE II CLASS I PER MIL-T-21014 WEIGHT 1.00 LBS.
- CADMIUM PLATE TO MEET REQUIREMENTS OF QQ-P-416 TYPE II CLASS 2 AND APPLY ONE COAT OF BMS 10-11 PRIMER AND ONE COAT OF TYPE 2 EPOXY ENAMEL

Elevator Balance Weight
Figure 3

NOTES

A MATES WITH HINGE BRACKET ON ELEVATOR REAR SPAR

B MATES WITH HINGE ON WING SUPPORT RIB

C MATES WITH HINGE FITTING ON TAB

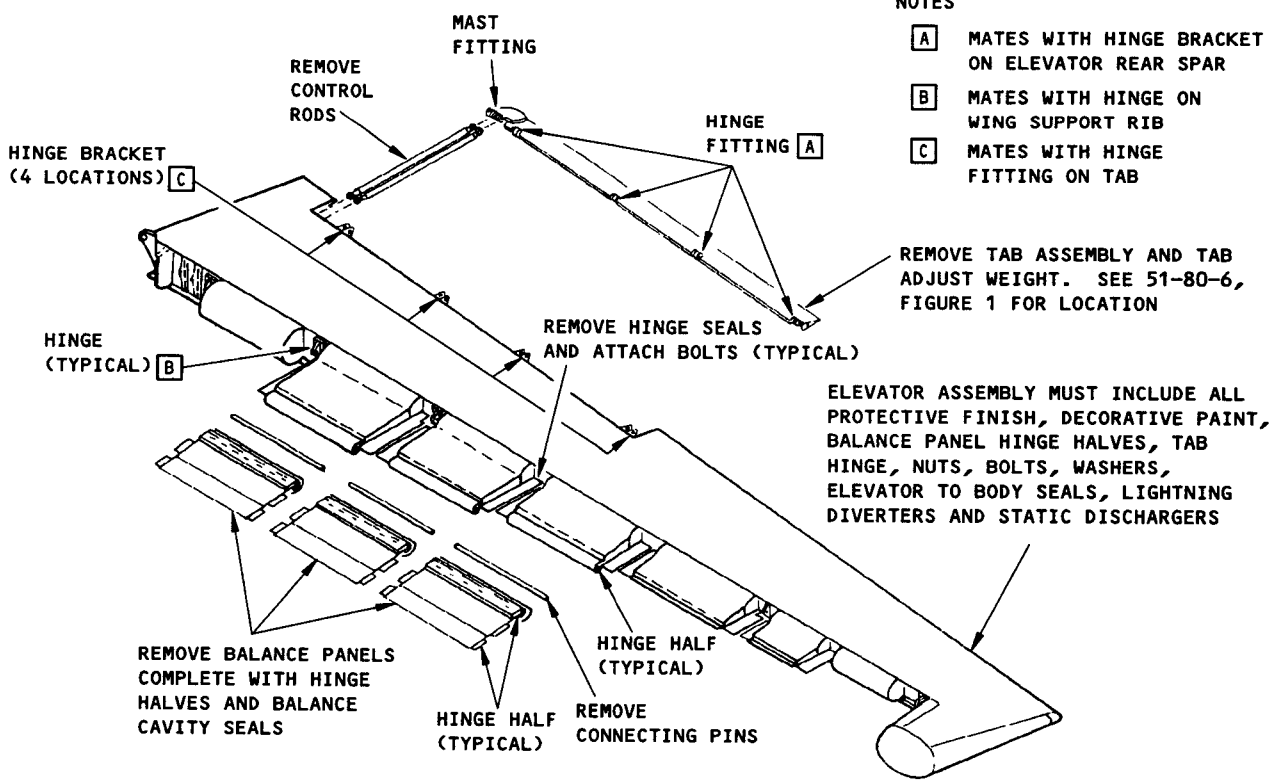

Elevator as Weighed Condition
Figure 4

BOEING PROPRIETARY - Copyright © - Unpublished Work - See title page for details.

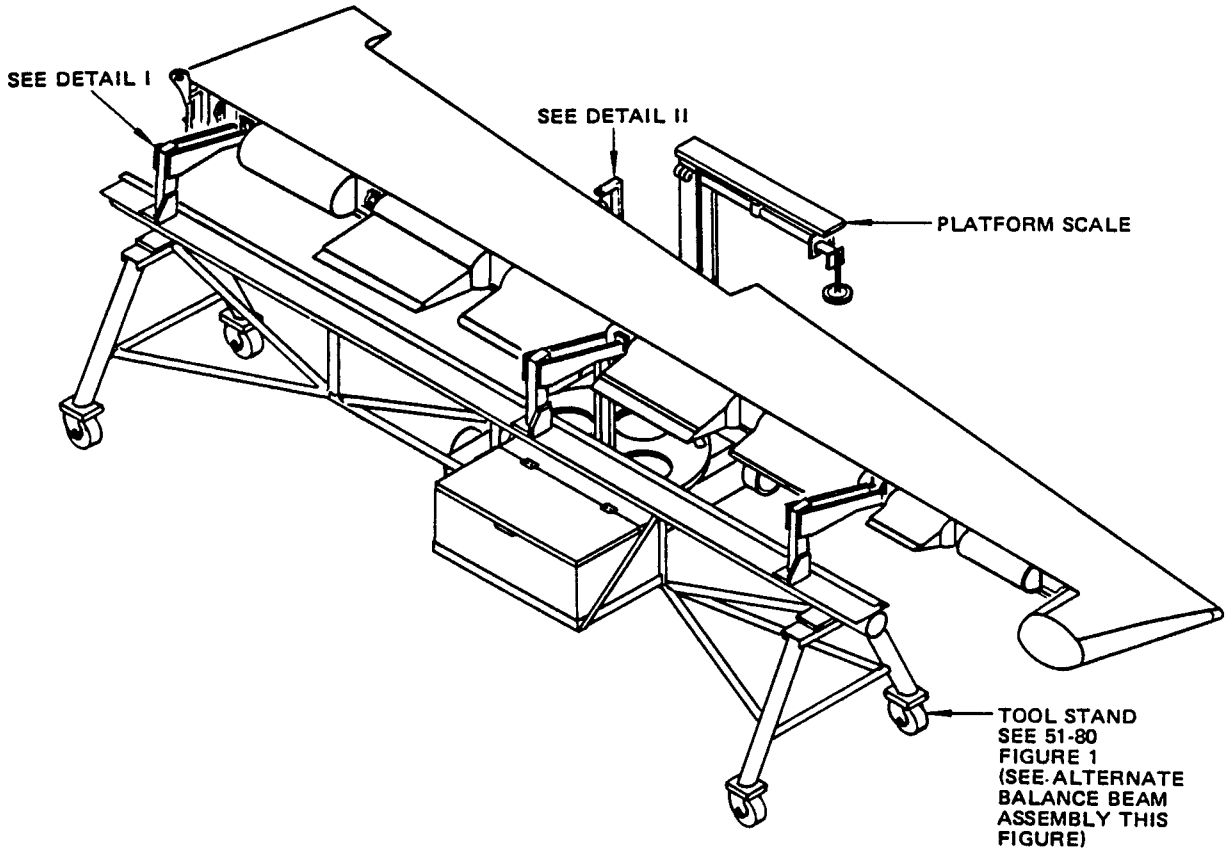

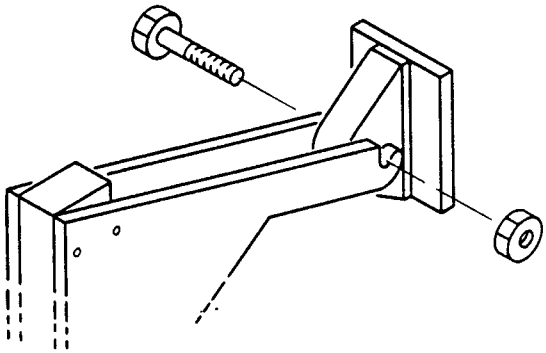

FWD HINGE SUPPORT
DETAIL I

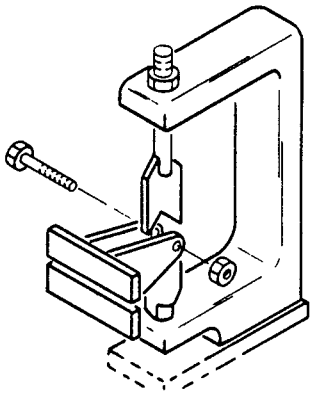

AFT HINGE SUPPORT
DETAIL II

Elevator Support During Balancing
Figure 5 (Sheet 1)

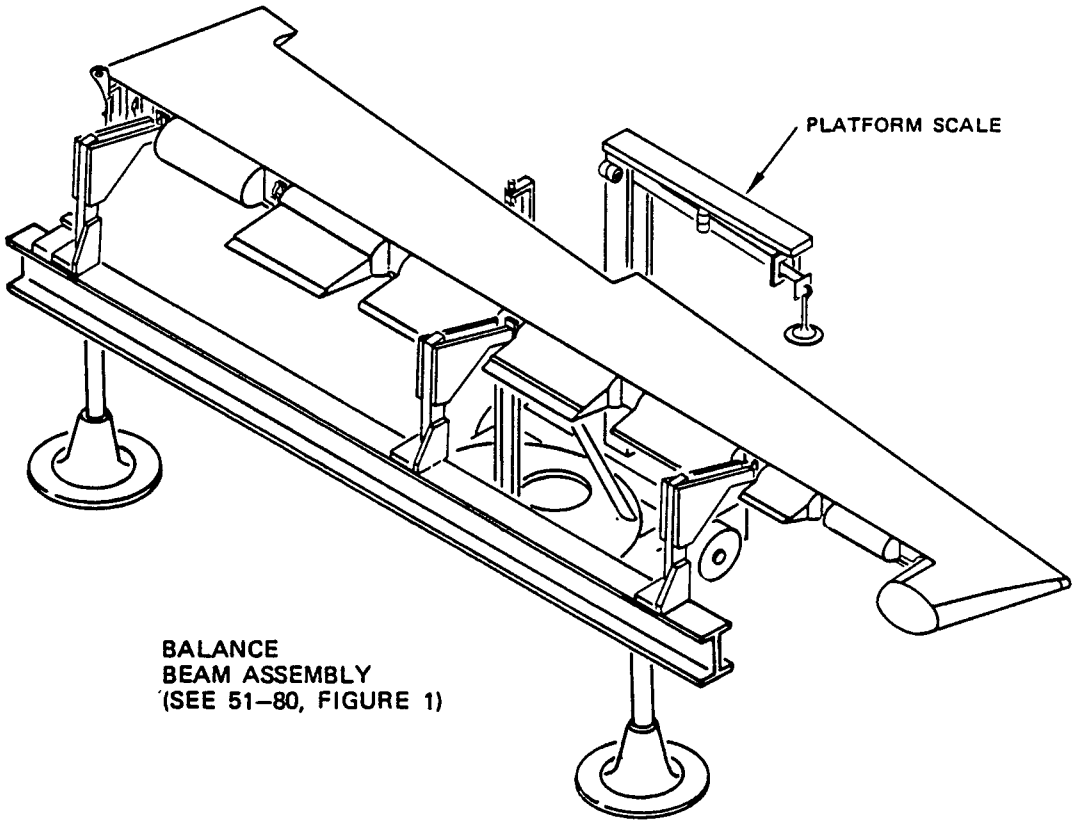

Elevator Support During Balancing
Figure 5 (Sheet 2)

ELEVATOR/TAB CONFIGURATION		PREFERRED CHECK BALANCE MOMENT (POUND-INCHES) [B]	PERMISSIBLE CHECK BALANCE MOMENT (POUND-INCHES) [B]	REVISED CHECK BALANCE MOMENT [A] (POUND-INCHES)		ADJUST WEIGHT TABLE NUMBER
ELEVATOR PT. NO.	TAB PT. NO			AFTER FIRST REPAIR	AFTER SECOND REPAIR	
65-73784 -1,-2	65-73799 -3,-4, -13,-14, -501, -502	+68.3 TO +119.3	+68.3 TO +119.3	+73.3 TO +114.3	+78.3 TO +109.3	II
65-73784 -5,-6,-11, -12,-13,-14, -17,-18,-19, -20,-21,-22, -23,-24,-29, -30,-31,-32, -33,-34,-35, -36,-39,-40, -41,-42		+68.3 TO +119.3	+68.3 TO +119.3	+73.3 TO +114.3	+78.3 TO +109.3	III
65-73784 -7,-8,-9,-10. -15,-16,-27, -28,-37,-38, -43,-44		+68.3 TO +78.3	+68.3 TO +119.3	+73.3 TO +114.3	+78.3 TO +109.3	IV
65-73784 -1,-2,-5,-6, -11,-12,-13, -14,-17,-18, -19,-20,-21, -22,-23,-24, -29,-30,-31, -32,-33,-34, -35,-36,-39, -40,-41,-42	65-73799 -45,-46, -509, -510	+101.9 TO +152.9	+101.9 TO +152.9	+106.9 TO +147.9	+111.9 TO +142.9	V
65-73784 -7,-8,-9,-10, -15,-16,-27, -28,-37,-38, -43,-44		+101.9 TO +111.9	+101.9 TO +152.9	+106.9 TO +147.9	+111.9 TO +142.9	VI

ELEVATOR BALANCE REQUIREMENT
TABLE I

NOTES:

[A] THESE REVISED CHECK BALANCE MOMENTS MUST BE USED WHEN THE ELEVATOR IS REPAIRED ON THE AIRPLANE

[B] PREFERRED VS PERMISSIBLE. IF THERE ARE MANY ADJUST WEIGHT SPACES AVAILABLE THEN IT IS DESIRABLE TO AIM FOR THE PREFERRED RANGE. IF THERE ARE NOT MANY SPACES LEFT THEN THE PERMISSIBLE RANGE IS ACCEPTABLE

Elevator Balance Weight Requirements
Figure 6 (Sheet 1)

C02780

FOR ELEVATOR 65-73784-1 OR -2 WITH TAB 65-73799-3,-13,-14,-501 OR -502		
TRIAL MOMENT (W_R)(B) POUND-INCHES	NUMBER OF BALANCE WEIGHTS REQUIRED	
	BAY 2 69-53211-1	BAY 3 69-53211-1
+ 68.30 to +119.30	0	0
+119.31 to +129.12	1	0
+129.13 to +138.94	2	0
+138.95 to +148.76	3	0
+148.77 to +158.58	4	0
+158.59 to +168.40	5	0
+168.41 to +178.22	6	0
+178.23 to +186.72	6	1
+186.73 to +195.22	6	2
+195.23 to +203.72	6	3
+203.73 to +212.22	6	4
+212.23 to +220.72	6	5
+220.73 to +229.22	6	6
+229.23 to +237.72	6	7
+237.73 to +246.22	6	8
+246.23 to +254.72	6	9
+254.73 to +263.22	6	10
+263.23 to +271.72	6	11
+271.73 to +280.22	6	12

TABLE II

FOR ELEVATOR 65-73784-5,-6,-11,-12,-13,-14,-17,-18,-19,-20,-21,-22,-23,-24,-29,-30,-31,-32,-33,-34,-35,-36,-39,-40,-41,-42 WITH TAB 65-73799-3,-4,-13,-14,-501 OR -502		
TRIAL MOMENTS (W_R)(B) POUND-INCHES	NUMBER OF BALANCE WEIGHTS REQUIRED	
	BAY 2 69-53211-1	BAY 3 69-53211-1
+ 68.30 to +119.30	0	0
+119.31 to +129.12	1	0
+129.13 to +138.94	2	0
+138.95 to +148.76	3	0
+148.77 to +158.58	4	0
+158.59 to +168.40	5	0
+168.41 to +176.90	5	1
+176.91 to +185.40	5	2
+185.41 to +193.90	5	3
+193.91 to +202.40	5	4
+202.41 to +210.90	5	5
+210.91 to +219.40	5	6
+219.40 to +227.90	5	7

TABLE III

FOR ELEVATOR 65-73784-7,-8,-9,-10,-15,-16,-27,-28,-37,-38,-43,-44 WITH TAB 65-73799-3,-4,-13,-14,-501 OR -502			
TRIAL MOMENT (W_R)(8) POUND-INCHES	NUMBER OF BALANCE WEIGHTS REQUIRED		
	BAY 2 69-53211-1	BAY 3 69-53211-1	BAY 4 69-53211-1
+ 68.30 to + 78.30	0	0	0
+ 78.31 to + 88.12	1	0	0
+ 88.13 to + 97.94	2	0	0
+ 97.95 to +107.76	3	0	0
+107.77 to +117.58	4	0	0
+117.59 to +127.40	5	0	0
+127.41 to +137.22	6	0	0
+137.23 to +145.72	6	1	0
+145.73 to +154.21	6	2	0
+154.22 to +162.71	6	3	0
+162.72 to +171.21	6	4	0
+171.22 to +179.71	6	5	0
+179.72 to +188.21	6	6	0
+188.22 to +196.71	6	7	0
+196.72 to +205.21	6	8	0
+205.22 to +213.71	6	9	0
+213.72 to +222.21	6	10	0
+222.22 to +230.71	6	11	0
+230.72 to +239.21	6	12	0
+239.22 to +246.41	6	12	1
+246.42 to +253.61	6	12	2
+253.62 to +260.81	6	12	3
+260.82 to +268.01	6	12	4

TABLE IV

FOR ELEVATOR 65-73784-1, -2, -5, -6, -11, -12, -13, -14, -17, -18, -19, -20, -21, -22, -23, -24, -29, -30, -31, -32, -33, -34, -35, -36, -39, -40, -41, -42
WITH TAB 65-73799-45, -46, -509, -510

TRIAL MOMENT (W_R) (B) POUND-INCHES	NUMBER OF BALANCE WEIGHTS REQUIRED		
	BAY 2 69-53211-1	BAY 3 69-53211-1	BAY 4 69-53211-1
+101.90 to +152.90	0	0	0
+152.91 to +162.71	1	0	0
+162.72 to +172.52	2	0	0
+172.53 to +182.33	3	0	0
+182.34 to +192.14	4	0	0
+192.15 to +201.95	5	0	0
+201.96 to +211.76	6	0	0
+211.77 to +220.24	6	1	0
+220.25 to +228.72	6	2	0
+228.73 to +237.20	6	3	0
+237.21 to +245.68	6	4	0
+245.69 to +254.16	6	5	0
+254.17 to +262.64	6	6	0
+262.65 to +271.12	6	7	0
+271.13 to +279.60	6	8	0
+279.61 to +288.08	6	9	0
+288.09 to +296.56	6	10	0
+296.57 to +305.04	6	11	0
+305.05 to +313.52	6	12	0
+313.53 to +320.72	6	12	1
+320.73 to +327.92	6	12	2
+327.93 to +335.12	6	12	3
+335.13 to +342.32	6	12	4

TABLE V

C02800

Elevator Balance Weight Requirements
Figure 6 (Sheet 4)

FOR ELEVATOR 65-73784-7,-8,-9,-10,-15,-16,-27,-28,-37,-38, -43 OR -44 WITH TAB 65-73799-45,-46,-509 OR -510			
TRIAL MOMENTS $(W_R)(B)$ POUND-INCHES	NUMBER OF BALANCE WEIGHTS REQUIRED		
	BAY 2 69-53211-1	BAY 3 69-53211-1	BAY 4 69-53211-1
+101.90 to +110.90	0	0	0
+110.91 to +120.71	1	0	0
+120.72 to +130.52	2	0	0
+130.53 to +140.33	3	0	0
+140.34 to +150.14	4	0	0
+150.15 to +159.95	5	0	0
+159.96 to +169.76	6	0	0
+169.77 to +178.24	6	1	0
+178.25 to +186.72	6	2	0
+186.73 to +195.20	6	3	0
+195.21 to +203.68	6	4	0
+203.69 to +212.16	6	5	0
+212.17 to +220.64	6	6	0
+220.65 to +229.12	6	7	0
+229.13 to +237.60	6	8	0
+237.61 to +246.08	6	9	0
+246.09 to +254.56	6	10	0
+254.57 to +263.04	6	11	0
+263.05 to +271.52	6	12	0
+271.53 to +278.72	6	12	1
+278.73 to +285.92	6	12	2
+285.93 to +293.12	6	12	3
+293.13 to +300.32	6	12	4

TABLE VI

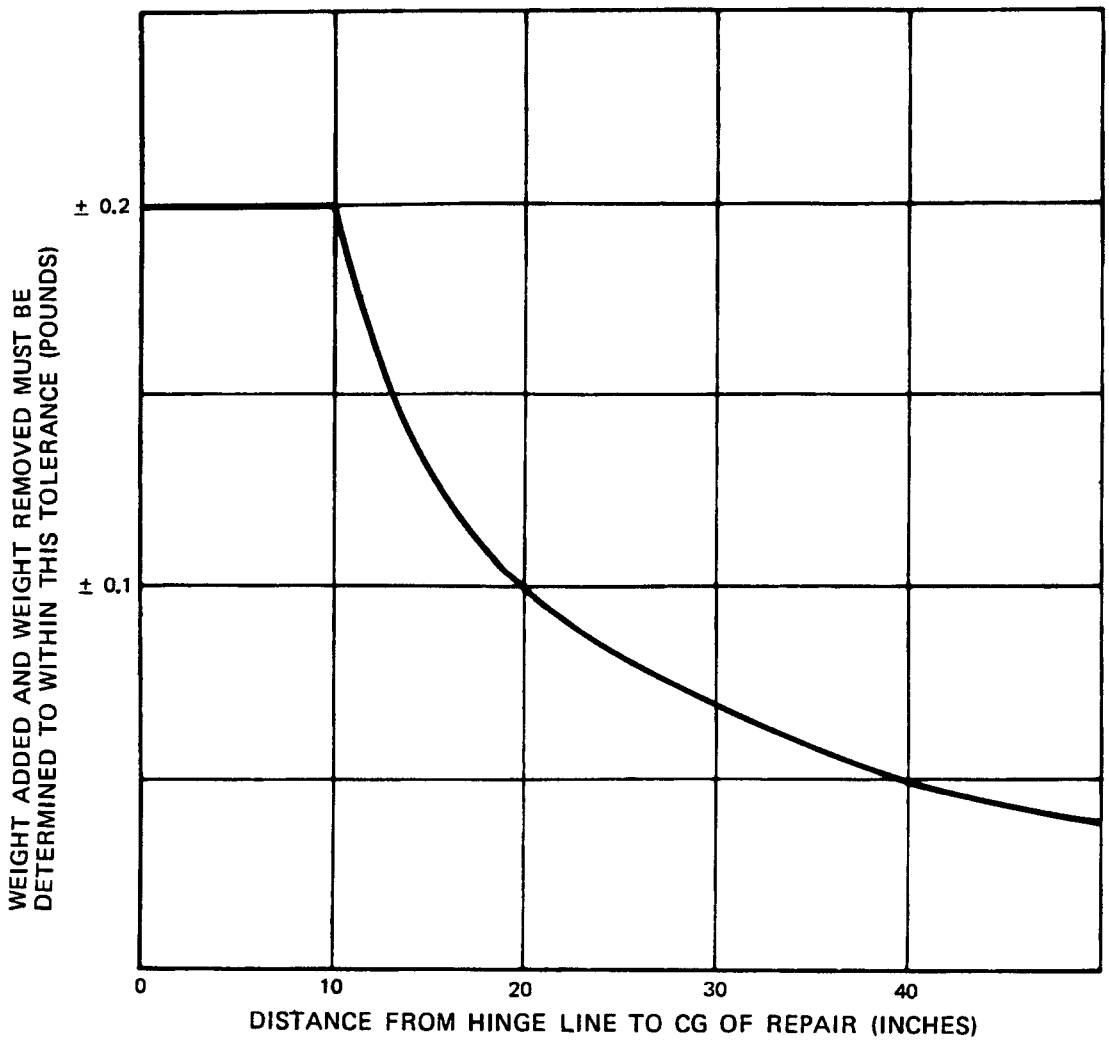

Weight Tolerance Requirements for Balancing Elevator on Airplane
Figure 7

BOEING PROPRIETARY - Copyright © - Unpublished Work - See title page for details.

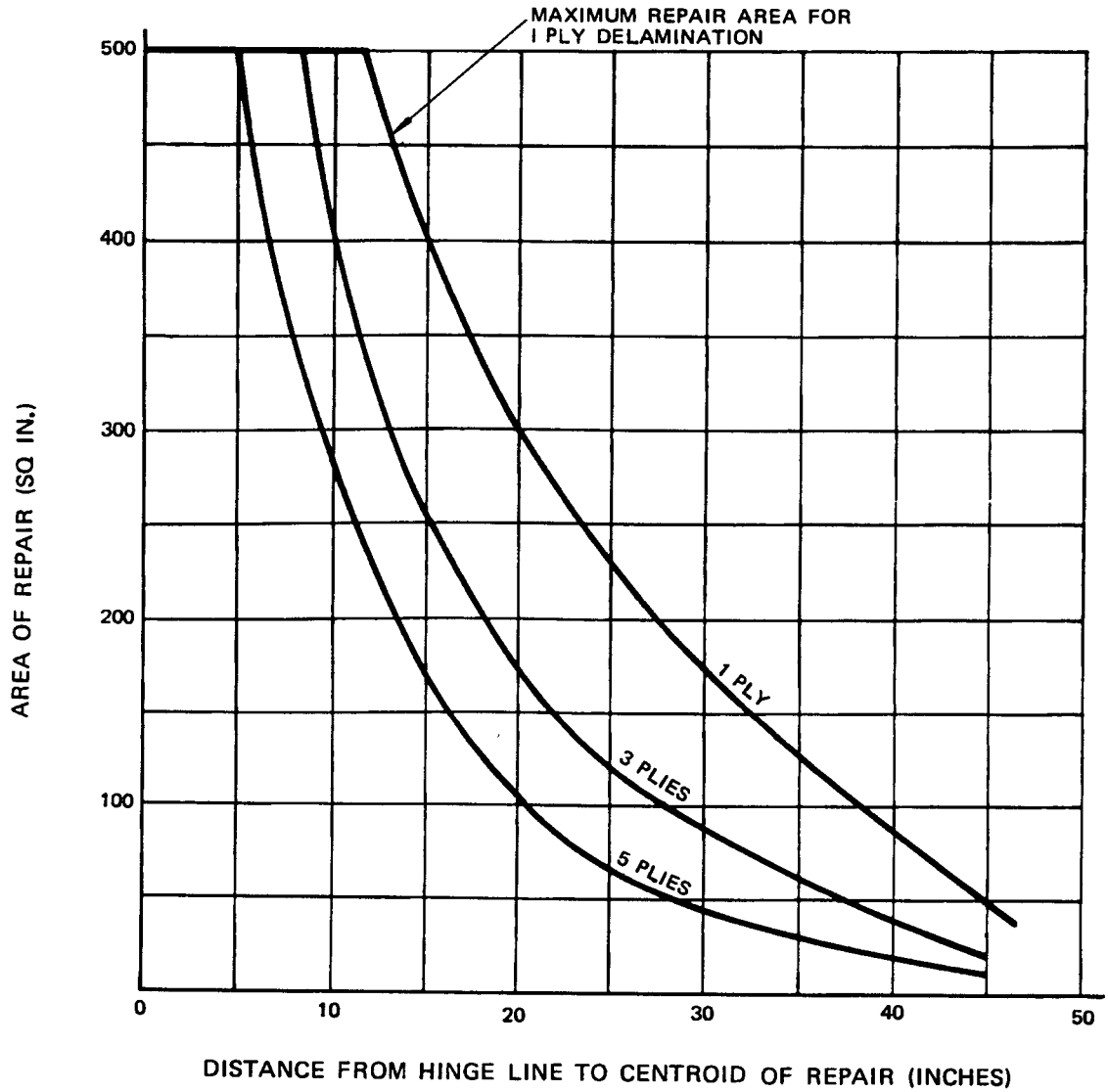

NOTE: THIS CHART SHOWS THE MAXIMUM SIZE OF REPAIR WHICH MAY BE MADE FOR DAMAGE TO SKIN PLIES WITHOUT REMOVAL FOR REBALANCING.

Maximum Size of Skin Repairs
Figure 8

BOEING PROPRIETARY - Copyright © - Unpublished Work - See title page for details.

ELEVATOR BALANCE PANEL PROCEDURES (GLASS FABRIC/METAL ELEVATOR)

WARNING: USE 51-80-5 FOR GLASS FABRIC/METAL ELEVATOR BALANCE PANEL PROCEDURES. USE 51-81-5 FOR GRAPHITE COMPOSITE ELEVATOR BALANCE PANEL PROCEDURES. FAILURE TO COMPLY CAN PRODUCE UNDESIRABLE FLUTTER AND DYNAMIC INSTABILITY WHICH COULD AFFECT FLIGHT SAFETY.

1. Weight Requirements

A. The balance panels themselves are not balanced, but their weight effects the balance of the elevator, consequently the weight of the panels are limited as follows:

Bay 2	5.40 (± .15) lb
Bay 3	5.32 (± .15) lb
Bay 4	5.14 (± .15) lb

B. For the condition of the balance panels for weighing see Fig. 1.

C. Where repairs would result in the panel weight being in excess of the maximum permitted in 1.A. above, the panel must be changed for one of the correct weight.

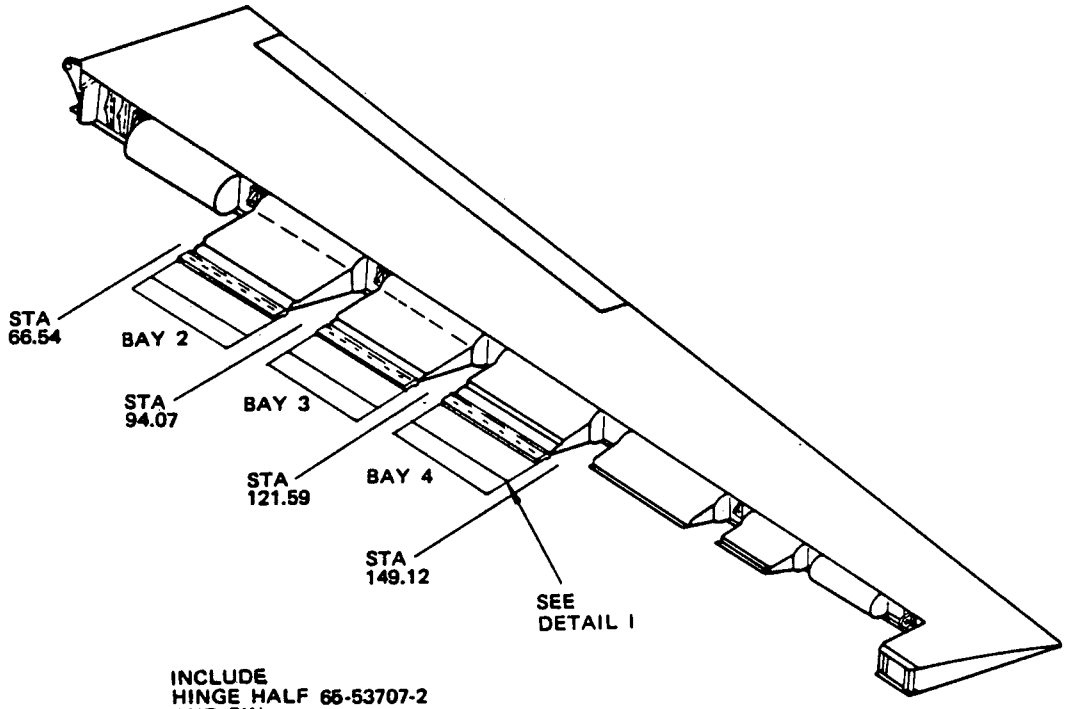

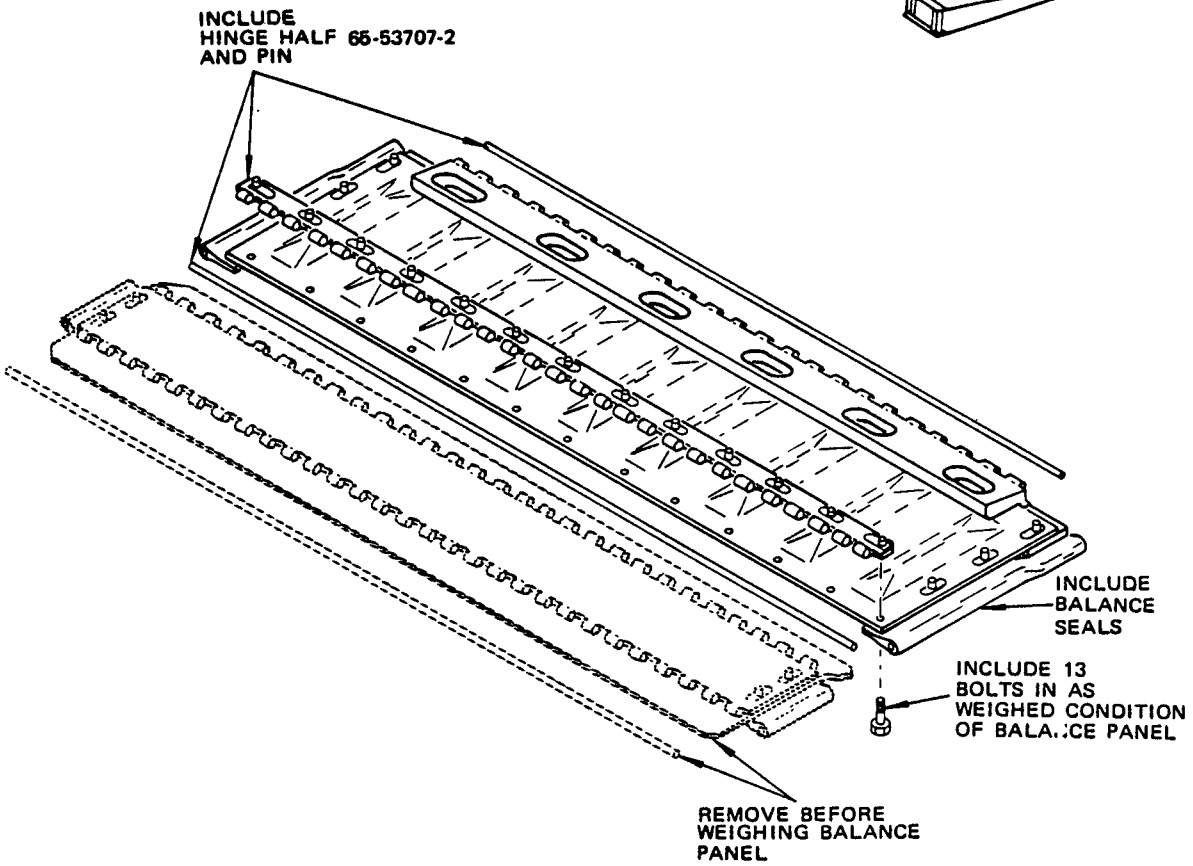

TYPICAL PANEL

DETAIL I

Elevator Balance Panels as Weighed Condition
Figure 1

ELEVATOR TAB BALANCING PROCEDURES (GLASS FABRIC/METAL ELEVATOR)

WARNING: USE 51-80-6 FOR GLASS FABRIC/METAL ELEVATOR TAB BALANCING. USE 51-81-6 FOR GRAPHITE COMPOSITE ELEVATOR TAB BALANCING. FAILURE TO COMPLY CAN PRODUCE UNDESIRABLE FLUTTER AND DYNAMIC INSTABILITY WHICH COULD AFFECT FLIGHT SAFETY.

1. Adjustment of Elevator Balance for Change in Tab Weight

A. The tab itself is not balanced but its weight affects the balance of the elevator, consequently the tab weight must be in the following range.

Tab 65-73799-3, -4, -13, -14, -501, -502, -505 or -506 - 6.30 to 7.60 lb
Tab 65-73799-45, -46, -509 or -510 - 5.00 to 6.30 lb

(1) The elevator balance for variations of tab weight within the applicable range is adjusted by means of tab adjust weights which are situated on the underside of the elevator leading edge (Fig. 1).

B. For the condition of tab for weighing, see Fig. 4.

C. The tab must be removed from the elevator and weighed. Install adjust weights on the elevator leading edge in accordance with the requirements of Fig. 2.

D. Stamp the calculated or weighed weight of the tab and the number of adjust weights required, on the tab in the space provided.

E. If Boeing tab adjust weights 69-53223-1 are not available make similar parts using the dimensions and material shown in Fig. 3.

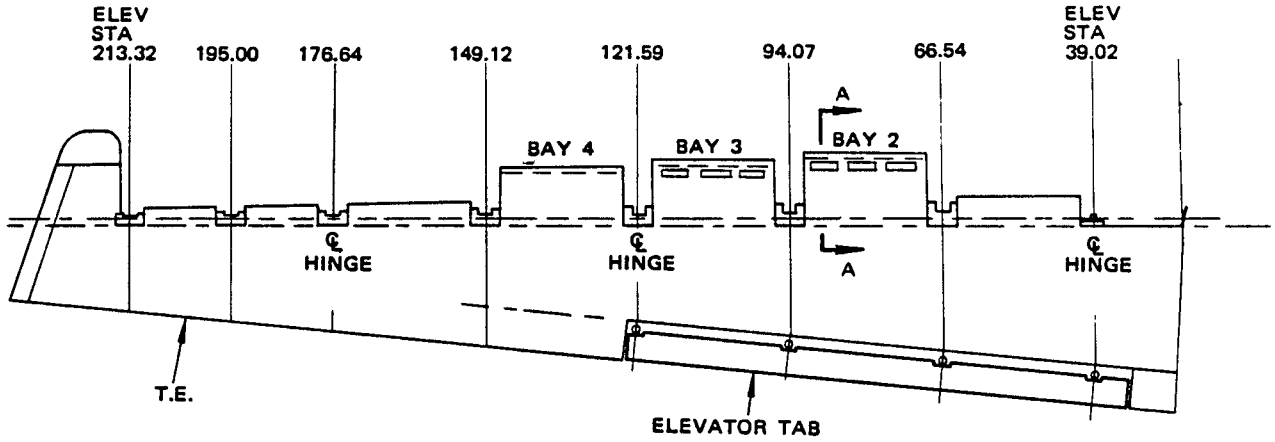

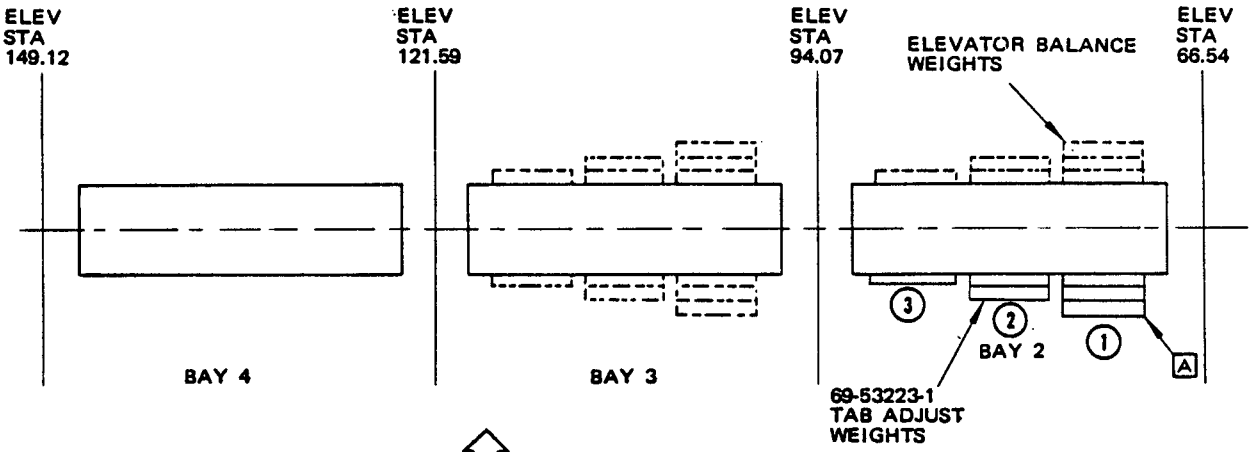

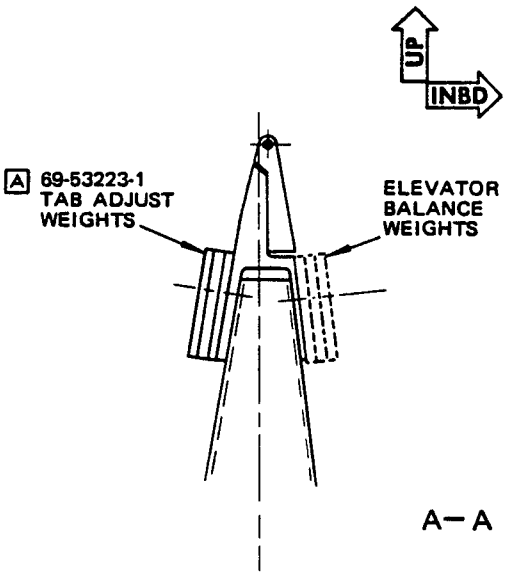

NOTE

A 3 WEIGHTS MAXIMUM IN POSITION 1, 2 IN POSITION 2 AND 1 IN POSITION 3. DO NOT STACK TAB ADJUST WEIGHTS 3 HIGH IN LOWER POSITION 1, UNLESS A TOTAL OF 6 WEIGHTS ARE REQUIRED.

Elevator Tab Adjust Weights Location Diagram
Figure 1

USE FOR 65-73799-3, -4, -13, -14, -501, -502, -505 AND -506	
TAB WEIGHT (POUNDS)	NUMBER OF ADJUST WEIGHTS REQUIRED (69-53223-1)
[A] 6.30 TO 6.40	0
6.41 TO 6.60	1
6.61 TO 6.80	2
6.81 TO 7.00	3
7.01 TO 7.20	4
7.21 TO 7.40	5
7.41 TO 7.60	6

TABLE I

USE FOR 65-73799-45, -46, -509 AND -510	
TAB WEIGHT (POUNDS)	NUMBER OF ADJUST WEIGHTS REQUIRED (69-53223-1)
[B] 5.00 TO 5.10	0
5.11 TO 5.30	1
5.31 TO 5.50	2
5.51 TO 5.70	3
5.71 TO 5.90	4
5.91 TO 6.10	5
6.11 TO 6.30	6

TABLE II

NOTE

- 65-73799-3, -4, -13, -14, -501, -502, -505 AND -506 TABS ARE NOT INTERCHANGEABLE WITH 65-73799-45, -46, -509 AND -510 UNLESS ELEVATOR IS REBALANCED

[A] MAX WEIGHT AT DELIVERY 7.30 POUNDS
MINIMUM ALLOWED WEIGHT 6.30 POUNDS.

[B] MAX WEIGHT AT DELIVERY 6.00 POUNDS
MINIMUM ALLOWED WEIGHT 5.00 POUNDS.

Elevator Tab Adjust Weight Requirements
Figure 2

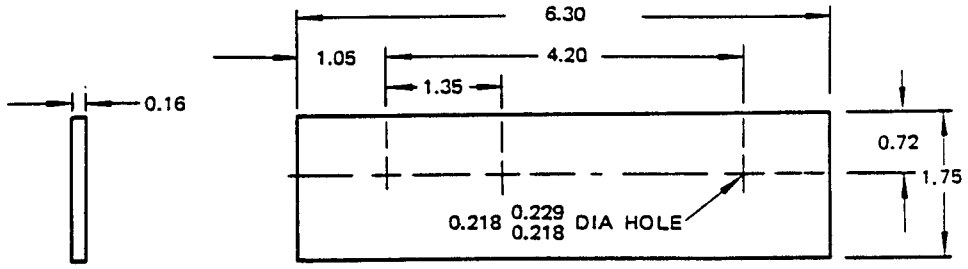

MATERIAL 4130 STEEL NORMALIZED

250 FINISH ON EDGES

NOTES

- PART NO. 69-53223-1
- CADMIUM PLATE ACCORDING TO QQ-P-416 TYPE II CLASS 2 AND APPLY ONE COAT OF BMS 10-11 TYPE 1 PRIMER PLUS ONE COAT OF BMS 10-11 TYPE 2 ENAMEL (ORANGE).

Elevator Tab Adjust Weight
Figure 3

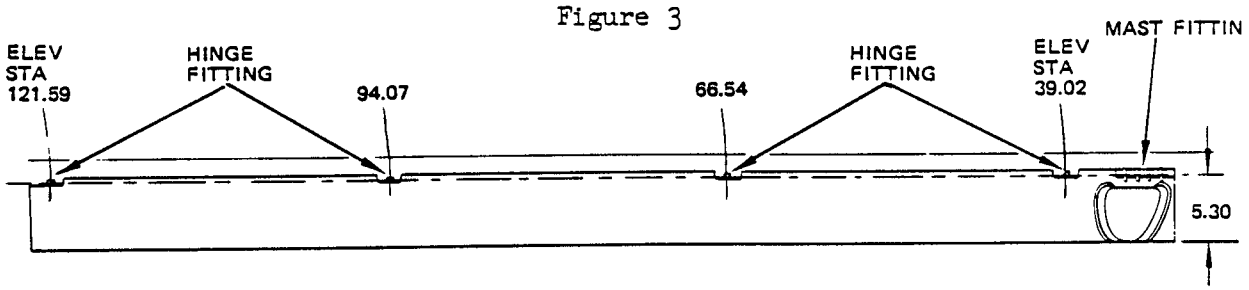

NOTES

- DO NOT INCLUDE BONDING JUMPERS AND INSTALLATION BOLTS, NUTS AND WASHERS.

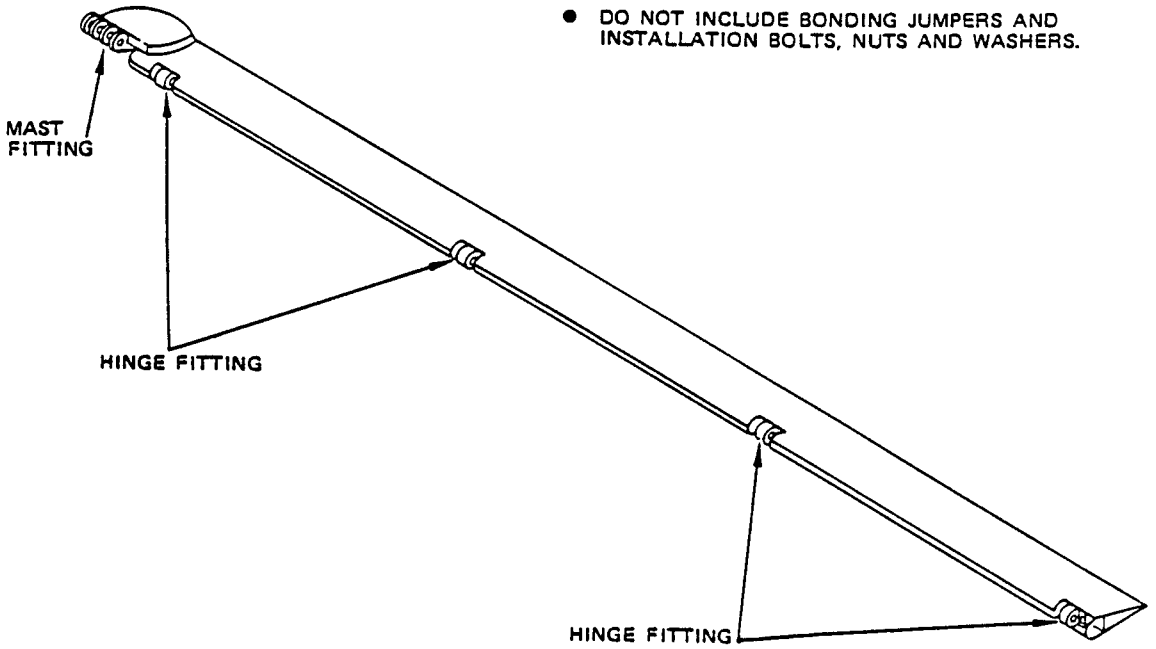

Elevator Tab as Weighed Condition
Figure 4

RUDDER BALANCING PROCEDURES (GLASS FABRIC/METAL RUDDER)

WARNING: USE 51-80-7 FOR GLASS FABRIC/METAL RUDDER BALANCING. USE 51-81-7 FOR GRAPHITE COMPOSITE RUDDER BALANCING. FAILURE TO COMPLY CAN PRODUCE UNDESIRABLE FLUTTER AND DYNAMIC INSTABILITY WHICH COULD AFFECT FLIGHT SAFETY.

1. Balancing Requirements

   A. The rudder must be balanced so that the check balance moment lies within the limits given in Fig. 8. The limits vary with rudders of different part numbers, and with the number of times the rudder has been repaired without removal, so care must be taken to ensure that the correct figures are used.

2. Repairs Which Do Not Require Rebalancing

   A. Repairs to rudders of known balance condition which remain within the limits specified in Fig. 8 after the repair moment has been added or subtracted, as appropriate, do not require balance adjustment.

   B. All unbalanced moments must be recorded and must be taken into account when a further repair or repainting is carried out. Record each occasion when rudder has been repaired without removal for rebalancing.

3. Repairs Which May Be Rebalanced without Removal of Rudder

   A. Provided that there is space for the addition of the required adjust weights, a rudder may be rebalanced without removal from the airplane if the following criteria can be met.

      (1) The moment of the repair about the hinge line does not exceed 75 pound-inches.

(2) The weight added by the repair (weight of repair material - weight of material removed) does not exceed 4.0 pounds.

(3) The weight of material removed (or lost due to damage) and the weight of material added must be determined within the tolerance specified in figure 9. This tolerance must account for the tolerance of the weighing equipment, inaccuracy of estimation of weight of material removed, and the inaccuracy in determining the weight of repair materials. See 51-80, figures 2 and 3 for the degree of accuracy that can be achieved with careful workmanship.

(4) The distance from the hinge line to the center of gravity of the repair must be determined to within ± 0.2 inch. This tolerance must include any possible error in estimating the position of the CG, and in measuring the distance to the hinge line due to accuracy of equipment or difficulty in determining that the measurement is perpendicular to the hinge line.

(5) Not more than two consecutive repairs or repaintings will be carried out without removal of the rudder for rebalancing. A third repair or repainting necessitates rebalancing in accordance with paragraph 4.

NOTE: Repainting the entire rudder in accordance with the instructions in 51-80, paragraph 4 will meet the conditions of the above criteria.

(6) Where the damage to be repaired is confined to delamination of the skin plies the chart shown in figure 10 may be used in place of the criteria listed in (1) through (4).

B. Adjust the rudder balance as follows:

(1) Ensure that the accuracy criteria can be met, and that the rudder has not already been repaired twice without removal for rebalancing.

(2) Determine repair weight by subtracting weight of removed material from weight of material used for repair. Determine repair weight within the accuracy criteria specified in paragraph 3.A.

(3) Measure distance X from C.G. (center of gravity) of the repair area to the rivet centerline as shown in figure 2.

Calculate distance Y. $Y = X + .50$.

(4) Calculate the required repair moment M.

M = Repair net weight in pounds times Y in inches.

(5) Calculate the rudder moment by adding the repair moment to the check balance moment before repair.

(6) If the moment of the repaired rudder falls within the range allowed in figure 8, no balance compensation is required. Record the moment and the fact that the rudder has been repaired without removal.

(7) If the moment of the repaired rudder falls outside the range allowed in figure 8, proceed as follows:

(a) Remove the fairing skin from the appropriate rudder balance arm as shown in figure 7.

(b) Observe the balance weight positions and from figure 1 determine the position numbers of the available unfilled spaces.

(c) Select the available positions in numerical order, for example position 7, 8, 9, 10 or 11, 12, 13, 14. See figure 3 for weight detail.

(d) With the available position numbers selected in paragraph (c) enter the balance weight position number and moment table of figure 4 and find the corresponding moment values.

(e) Add enough adjust weights to bring rudder moment into the range allowed by figure 8.

(f) Record the new rudder moment and the fact that the rudder has been repaired without removal for balancing.

(8) Example of balance weight calculation.

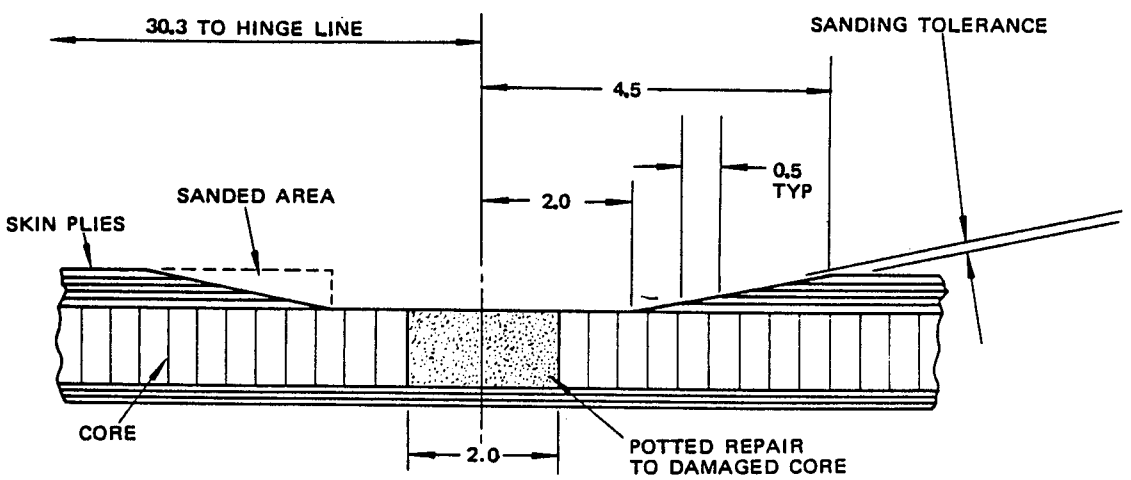

(a) Assume that rudder 65-73788-501 has been punctured. The core is damaged for a 1-inch radius circle around the puncture and the outer skin plies for a 2-inch radius around the puncture. The puncture is located 30.3 inches aft of the hinge line. The rudder check balance moment before repair is +746.21 pound-inches, this figure having been obtained by jig balancing after a previous repair. The rudder has the original paint applied in manufacture. Adjust weight positions 18 through 32 are available for weight addition. The rudder is to be repaired to 51-40-9, paragraph 5 using a potting compound for the repair of the core.

(b) Determine whether the accuracy criteria specified in paragraph 3.A. can be met:

1) Requirements of 3.A.(1) and 3.A.(2) are obviously met.

2) Requirements of 3.A.(3) and figure 9 are that the weight removed and the weight added must be determined within ± 0.068 pound.

a) Weight removed:

Skin plies removed complete with paint can be weighed within ± 0.01 pound. The sanded fiberglass plies can be sanded to a tolerance of ± 0.002 inch therefore the weight tolerance is:

Thickness tolerance x area sanded x density
$= \pm 0.002 \times \pi \ (4.5^2 - 2.0^2) \times 0.067 = \pm 0.007$ pound

The paint removed over the sanded area is within ± 0.001 of the 0.0032 originally applied, therefore the weight tolerance is:

$$\frac{\text{Area in sq in.} \times \text{Weight per sq ft per } 0.001}{144}$$

$$= \frac{\pi \ (4.5^2 - 2.0^2) \times 0.008}{144} = \pm 0.003$$

Therefore the total tolerance of the weight of skin and paint removed is $(\pm 0.01)+(\pm 0.007)+(\pm 0.003) = \pm 0.02$ pound, which is within the ± 0.068 pound tolerance allowed.

b) Weight added:

NOTE: The weights of repair materials may be determined by actually weighing the materials, parting films and tools before application and subtracting the weight of the surplus material, parting film and tools after application. Using this method the net weight can be determined to within ± 0.01 pound for each weighing.

Skin plies, calculated to a tolerance of ± 10%, give a tolerance of:

± 10% of area of plies x weight per sq in. per ply = ± 10% of π $(2.5^2+3.0^2+3.5^2+4.0^2+4.5^2)$ x 0.00067 = ± 0.013 pound

The potted area is within 1/2 cell of being a 2-inch circle (1/2 cell = 0.125 inch) therefore the weight tolerance is:

Perimeter of potted area x cross section of 1/2 cell x density = (2π) x (0.125 x 0.5) x (0.0312) = ± 0.012 pound

Paint is to be applied over an area 2 ft x 2 ft with a tolerance of ± 0.001, therefore the weight tolerance is:

2 x 2 x 0.008 = ± .03 pound

The total tolerance of weight added by fiberglass, potting and paint is (± 0.013)+(± 0.012)+(± 0.03) = ± 0.055 pound, which is within the ± 0.068 pound tolerance allowed.

3) The ± 0.2 inch tolerance on the distance from the CG of the repair to the hinge line can easily be met due to the small size and symmetry of the repair.

(c) Calculate the weight removed:

Weight of skin plies including paint, actually weighed = 0.020 pound
Weight of sanded material = density x cross sectional area sanded x perimeter at centroid = 0.067 x $\frac{0.0225}{2}$ x (4.5-2.0) x

$2\pi(2 + \frac{4.5-2.0}{3})$ = 0.034 pound

Weight of paint over sanded area
$= \frac{\pi (4.5^2-2.0^2) \times 0.028}{144} = 0.01$ pound

Therefore the total weight removed = 0.020 + 0.034 + 0.01
= 0.064 pound

(d) Calculate the weight added:

Skin plies (No. 181 = 0.00067 pounds per sq in.)
Weight = $\pi (2.5^2+3.0^2+3.5^2+4.0^2+4.5^2) \times 0.00067 = 0.13$ pound

Potting compound (0.0312 pound per cu. in.)
Weight = $\pi (1^2) \times 0.5 \times 0.0312 = 0.05$ pound

Paint (2 ft x 2 ft, 0.003 thick at 0.008 pounds per sq ft per 0.001)
Weight = (2 x 2)x 3 x 0.008 = 0.096 pound

Therefore the total weight added = 0.13+0.05+0.096 = 0.276 pound

(e) Calculate the net weight added:

weight = weight added - weight removed
= 0.276-0.064 = 0.212 pound

(f) Measure dimension X from CG of repair to rivet line = 29.8 inches

(g) Calculate dimension Y = X + 0.5 = 30.3 inches

(h) Calculate moment of repair = Y x net weight added
= 30.3 x 0.212 = +6.4 pound-inches

(i) Calculate moment of rudder
= Moment of rudder before repair + Moment of repair
= 746.21 + 6.4 = +752.61 pound-inches

(j) This moment does not fall within the permitted range of +710.4 to +745.0 shown in figure 8, so adjust weights must be installed.

(k) Add adjust weights, starting at the first available position (position number 18) until the moment falls within the permitted range:

Present moment	=	+752.61 pound-inches
Weight number 18	=	-5.13 pound-inches
Weight number 19	=	-4.12 pound-inches
New rudder moment	=	+743.36 pound-inches

If it is decided to balance to the middle of the permitted range (+727.7 pound-inches) add further weights:

		+743.36 pound-inches
Weight number 20	=	-4.12 pound-inches
Weight number 21	=	-4.11 pound-inches
Weight number 22	=	-4.11 pound-inches
Weight number 23	=	-4.19 pound-inches
New rudder moment	=	+726.83 pound-inches

(l) Record the new rudder moment and the fact that the rudder has been repaired without removal from the airplane.

4. Balancing Procedure with Rudder Removed from Airplane

A. Mount the rudder on a balance jig stand as illustrated in figure 6, using the mounting points indicated in figure 7. See figure 5 for the condition of the rudder for balancing.

B. Measure distance Z from forward support to centerline of rivet in the spar. This dimension is measured perpendicular to the hinge line. (See figures 2 and 7.)

C. Calculate distance (B). (B) = Z-.50

D. With the chord plane horizontal measure the weight reaction (WR) at the forward support in pounds.

E. Obtain a trial moment by multiplying the weight reaction (WR) by the moment arm (B).

Trial moment = (WR)(B)

F. Determine the difference between the trial moment and the upper and lower limits of the preferred check balance moment for the type of rudder being balanced (Fig. 8). These figures represent the upper and lower limits of the adjust weight moment required to return the rudder to an acceptable balance condition.

G. Determine the available adjust weight positions on the rudder balance arm. For example, if positions 1 thru 8 are already filled, the first additional weight must be located at position 9.

H. Determine the number of adjust weights required from Fig. 4 to provide an adjust weight moment within the limits established in par. F. The moments given in Table I or II of Fig. 4, as appropriate, should be totalled progressively, starting with the figure opposite the first available weight position established in par. G, until the desired adjust weight moment is reached. This will then indicate the number of adjust weights required.

I. Install the adjust weights on the rudder balance arm.

J. Obtain a second trial moment (WR)(B). The moment must be between the permissible limits shown in Fig. 8.

K. Stamp the trial moment on the Metal-Cal attached to the rudder to indicate that the proper balance moments have been obtained.

L. Example of balance weight calculations for rudder 65-73788-1.

(1) Assume the following values:

(WR) = -3.11 lbs
(B) = -20.88 inches

Trial moment = (WR)(B) = (-3.11)(-20.88) = +64.9 pound-inches.
Adjust weight positions 1 thru 4 are already filled.

(2) From Fig. 8 the preferred check balance moment is between -47.75 and +28.75. The adjust weight moment required is therefore:
64.9 - (-47.75) = 112.65 pound-inches maximum
64.9 - 28.75 = 36.15 pound-inches minimum

(3) From Fig. 4 table I list the balance weight positions and moments until the total of the moments exceeds the minimum adjust weight moment of 36.15 pound-inches.

Position	Moment (pound-inches)
5	10.10
6	10.08
7	9.77
8	9.78
	39.73

(4) Install weights at position 5 thru 8 to correct the balance.

(5) Obtain a second trial moment (WR)(B).

(WR) = -1.21 lbs
(B) = -20.88 inches

Trial Moment = (WR)(B) = (-1.21)(-20.88) = 25.26 pound-inches.
This is within the limits specified in Fig. 8.

5. <u>Alternate Balancing Procedure with Rudder Removed from Airplane</u>

A. Mount the rudder on a balance jig stand as illustrated in Fig. 6 using the mounting points indicated in Fig. 7. Refer to 51-80, Fig. 1 for the required support fittings and equipment. The rudder should be in the condition specified in Fig. 5, but also have any existing adjust weights removed.

B. Carefully measure distance Z to centerline of rivet in direction indicated in Fig. 2 and 7.

C. Calculate distance (B). (B) = Z -.50

D. With the chord plane horizontal, measure the weight reaction (WR) at tool hole K.

E. Obtain a trial moment by multiplying the weight reaction (WR) measured in pounds by the moment arm (B).

Trial Moment = (WR) (B)

F. Refer to Fig. 8 Table I, II, III or IV and read off the total number of balance weights required.

G. Install the balance weights on the rudder balance arm in positions of numerical order as shown in Fig. 1.

H. Obtain a second trial moment (WR)(B). The required moment must be between the permissible limits shown in Fig. 8.

I. Stamp the trial moment on the Metal-Cal attached to the rudder to indicate that the proper balance moments have been obtained.

J. Example of rebalance weight calculations for rudder 65-73788-1.

(1) Assume the following values (Fig. 2 and 7):

(WR) = -3.11 pounds
(B) = -20.88

(2) Trial moment = (WR)(B) = (-3.11)(-20.88) = +64.9 pound-inches.

(3) The rudder balance Table I of Fig. 8 indicates that four (4) 69-43281-1 balance weights are required.

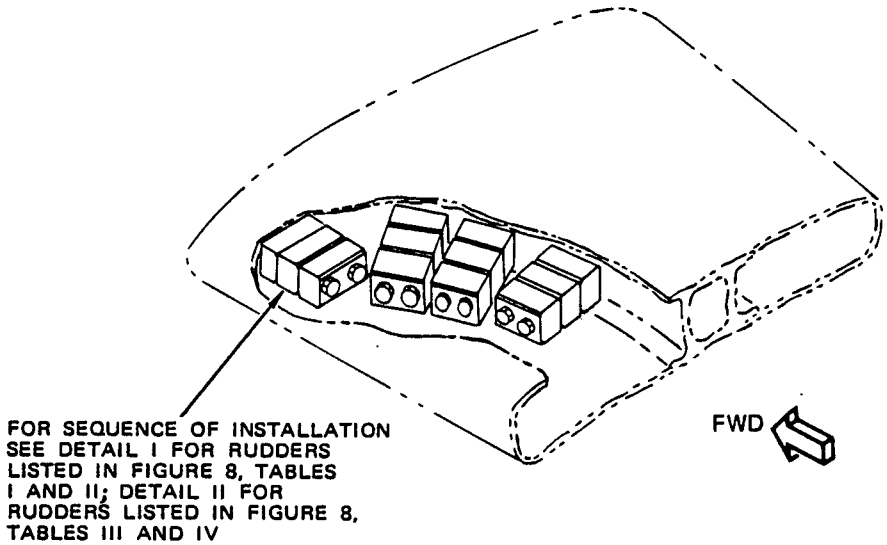

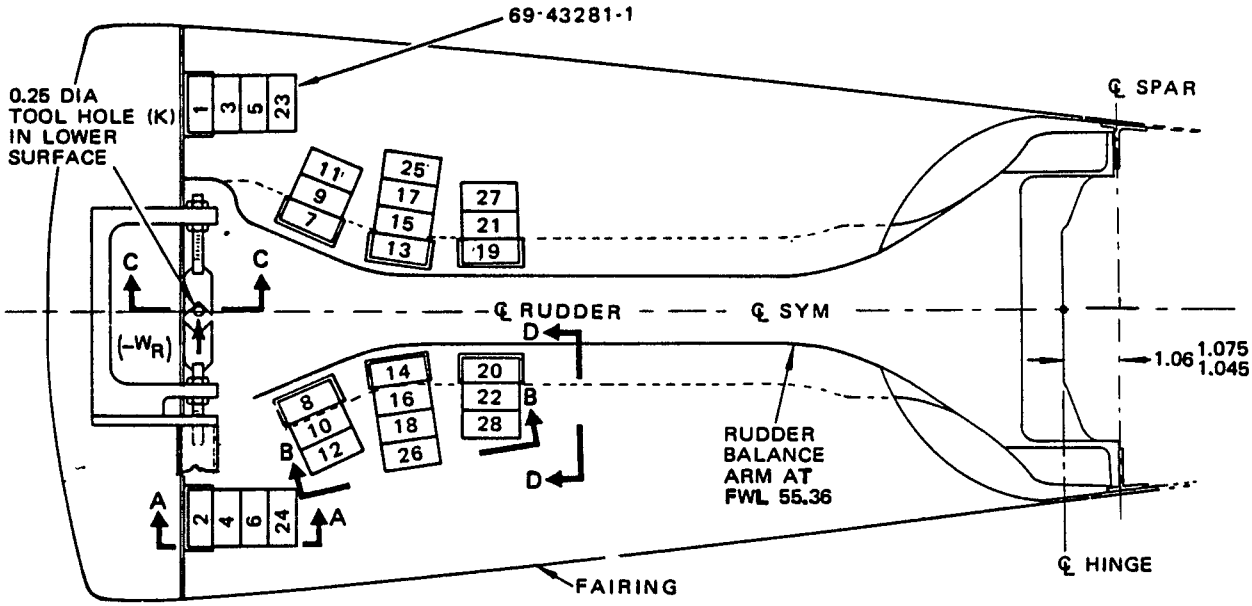

TYPICAL FOR RUDDERS 65-73788-1, -2, -3, -4, -5, -6, 65-75339-1, -14, -15 AND -16

DETAIL I

Rudder Weight and Tool Hole Location Diagram
Figure 1 (Sheet 1)

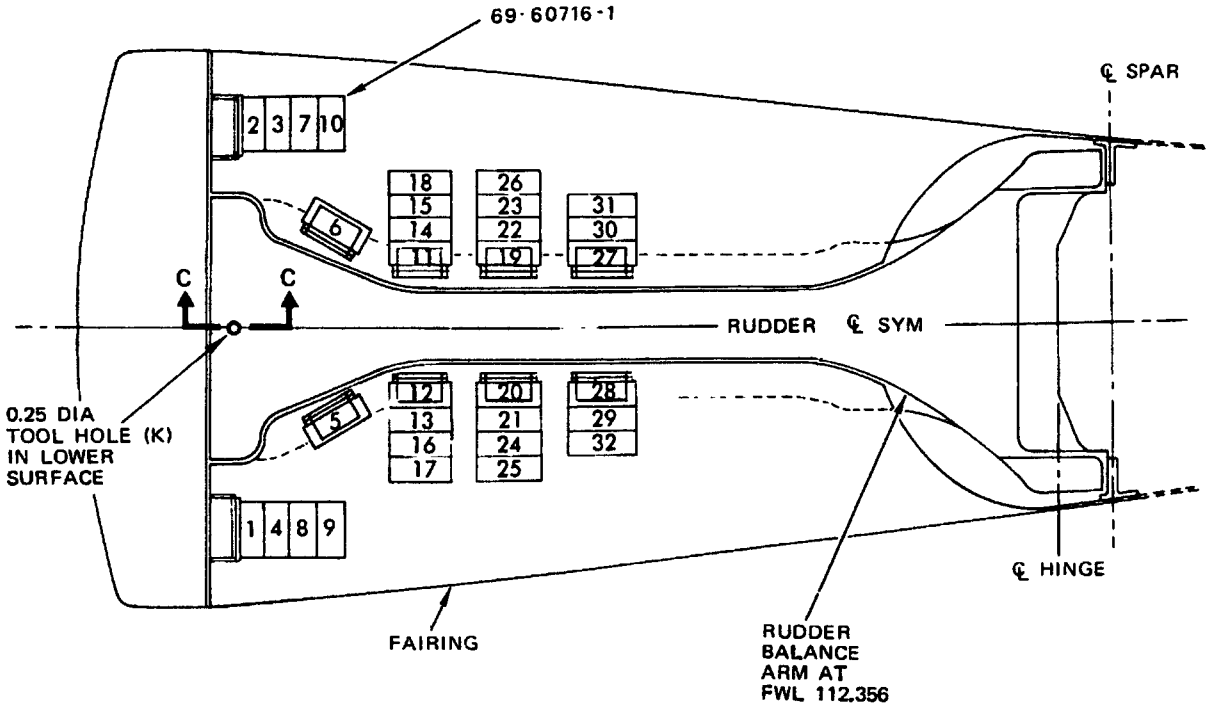

TYPICAL FOR RUDDERS 65-73788-501,-502,-503,-504,
65-73788-7, 65-75957-1,-2 AND -12
DETAIL II

Rudder Weight and Tool Hole Location Diagram
Figure 1 (Sheet 2)

L42178

BOEING PROPRIETARY - Copyright © - Unpublished Work - See title page for details.

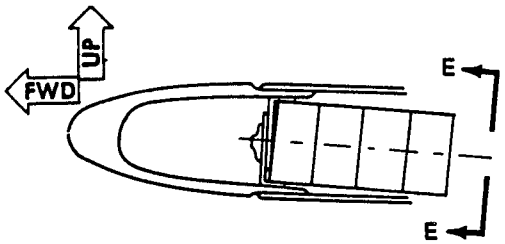

SECTION A–A

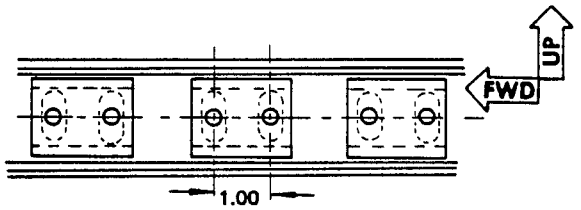

SECTION B–B

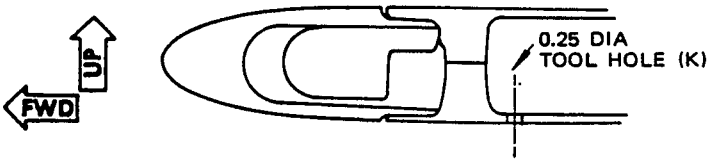

SECTION C–C

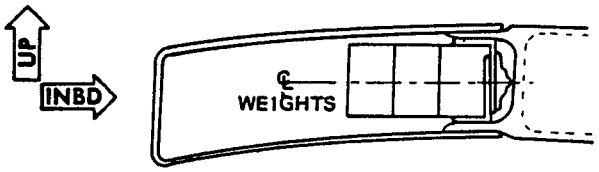

SECTION D–D

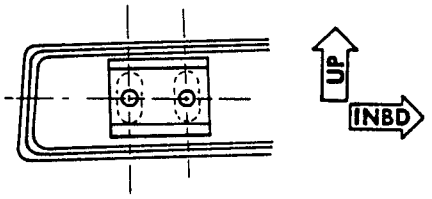

SECTION E–E

Rudder Weight and Tool Hole Location Diagram
Figure 1 (Sheet 3)

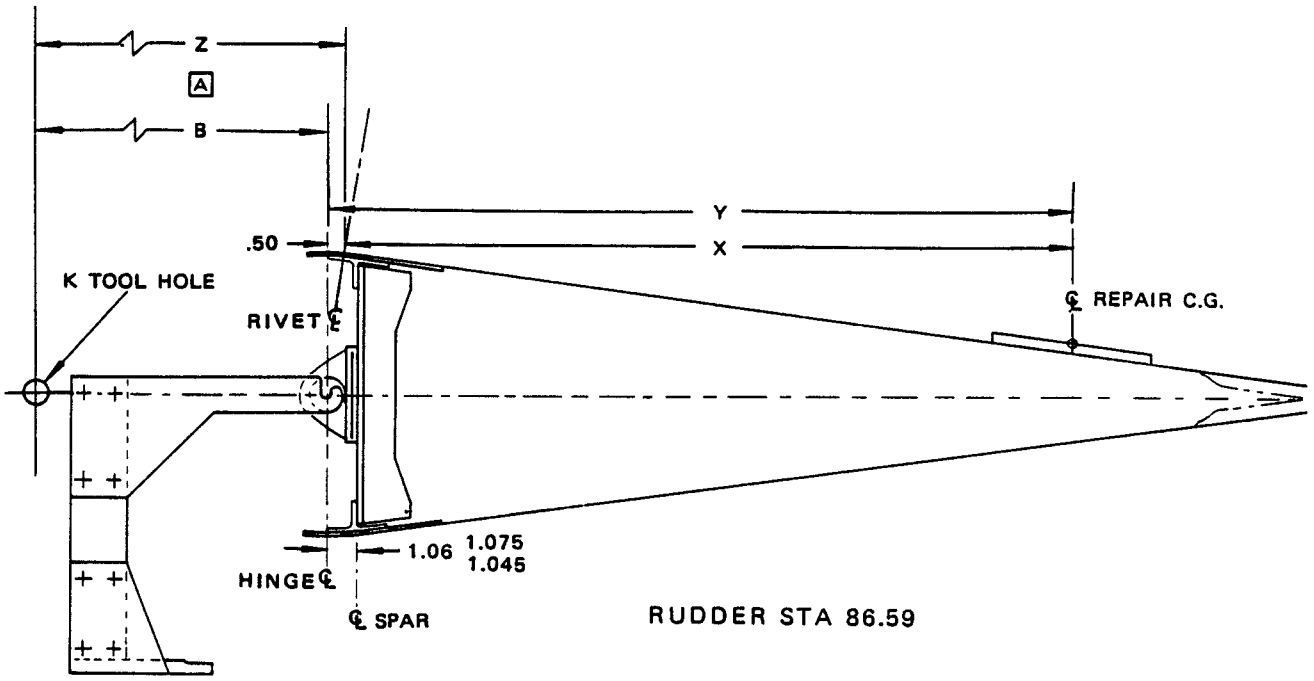

NOTE

A DIMENSION B AND Z ARE MEASURED PERPENDICULAR TO CENTERLINE HINGE. SEE FIGURE 7.

Rudder Repair Moment Arm Diagram
Figure 2

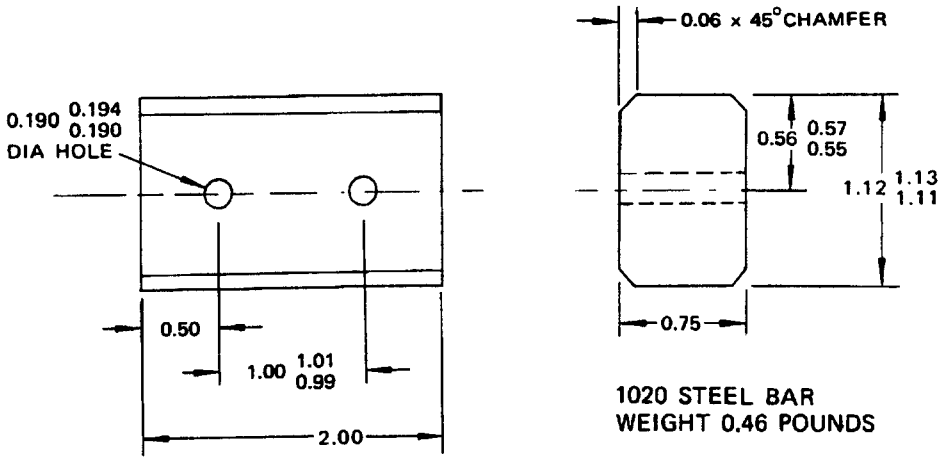

PART NO. 69-43281-1

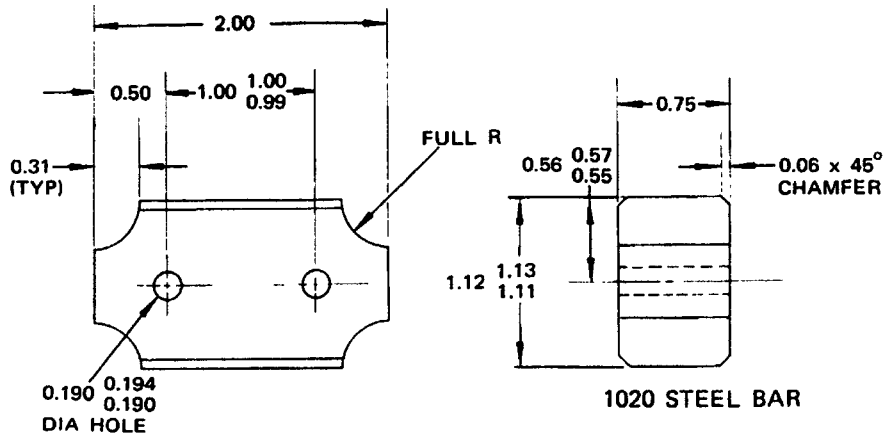

PART NO. 69-60716-1
(MAY BE MADE FROM 69-43281-1)

NOTES:

- CADMIUM PLATE ACCORDING TO QQ-P-416 TYPE II, CLASS 2 AND APPLY ONE COAT OF BMS 10-11, TYPE 1 PRIMER PLUS ONE COAT OF BMS 10-11, TYPE 2 ENAMEL.
- USE WEIGHT 69-43281-1 FOR 65-75339-1, -14,-15,-16 AND 65-73788-1,-2,-3, -4,-5 AND -6.
- USE WEIGHT 69-60716-1 FOR 65-73788-501, -502,-503,-504, 65-73788-7, AND 65-75957-1,-2,-12.

Rudder Balance Weight
Figure 3

BOEING PROPRIETARY - Copyright © - Unpublished Work - See title page for details.

USE THIS TABLE FOR RUDDERS 65-73788-1, -2, -3, -4, -5, -6 AND 65-75339-1, 14, -15,-16			
BALANCE WEIGHT POSITION	MOMENT POUND-INCHES	BALANCE WEIGHT POSITION	MOMENT POUND-INCHES
1	11.07	15	8.27
2	11.07	16	8.28
3	10.44	17	8.21
4	10.43	18	8.21
5	10.10	19	7.47
6	10.08	20	7.49
7	9.77	21	7.26
8	9.78	22	7.27
9	9.36	23	9.79
10	9.37	24	9.78
11	9.23	25	8.15
12	9.23	26	8.15
13	8.58	27	7.26
14	8.58	28	7.27

TABLE I

USE THIS TABLE FOR RUDDERS 65-75957-1, -2, -12 AND 65-73788-501, -502, -503, -504, 65-73788-7			
BALANCE WEIGHT POSITION	MOMENT POUND-INCHES	BALANCE WEIGHT POSITION	MOMENT POUND-INCHES
1	6.90	17	5.13
2	6.90	18	5.13
3	6.52	19	4.12
4	6.52	20	4.12
5	5.89	21	4.11
6	5.89	22	4.11
7	6.26	23	4.19
8	6.26	24	4.19
9	6.00	25	4.30
10	6.00	26	4.30
11	5.00	27	3.29
12	5.00	28	3.29
13	4.97	29	3.32
14	4.97	30	3.32
15	5.04	31	3.43
16	5.04	32	3.43

TABLE II

Balance Weight Position Number and Moment Requirements
Figure 4

BOEING PROPRIETARY - Copyright © - Unpublished Work - See title page for details.

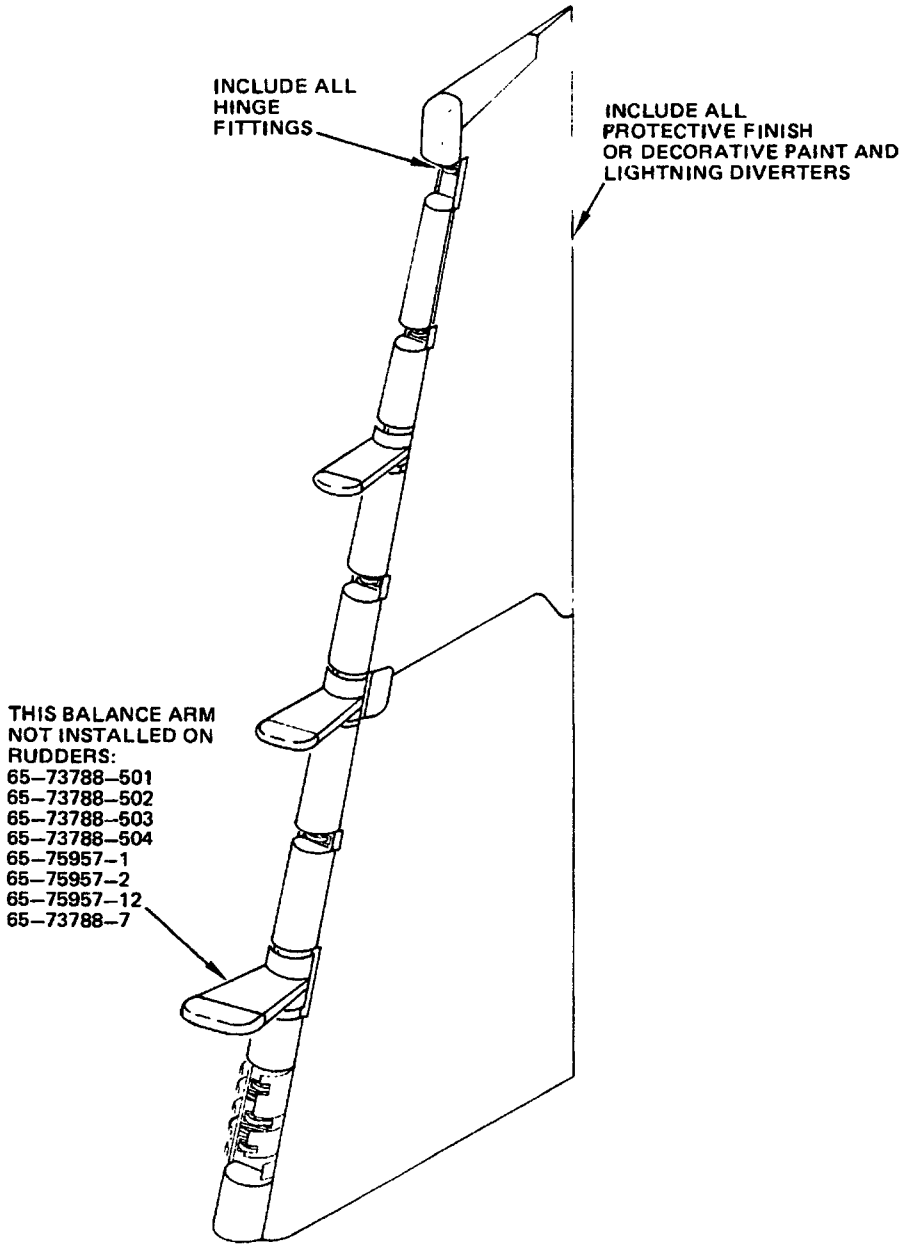

NOTE

- REMOVE ALL BONDING JUMPERS

Rudder as Weighed Condition
Figure 5

BOEING PROPRIETARY - Copyright © - Unpublished Work - See title page for details.

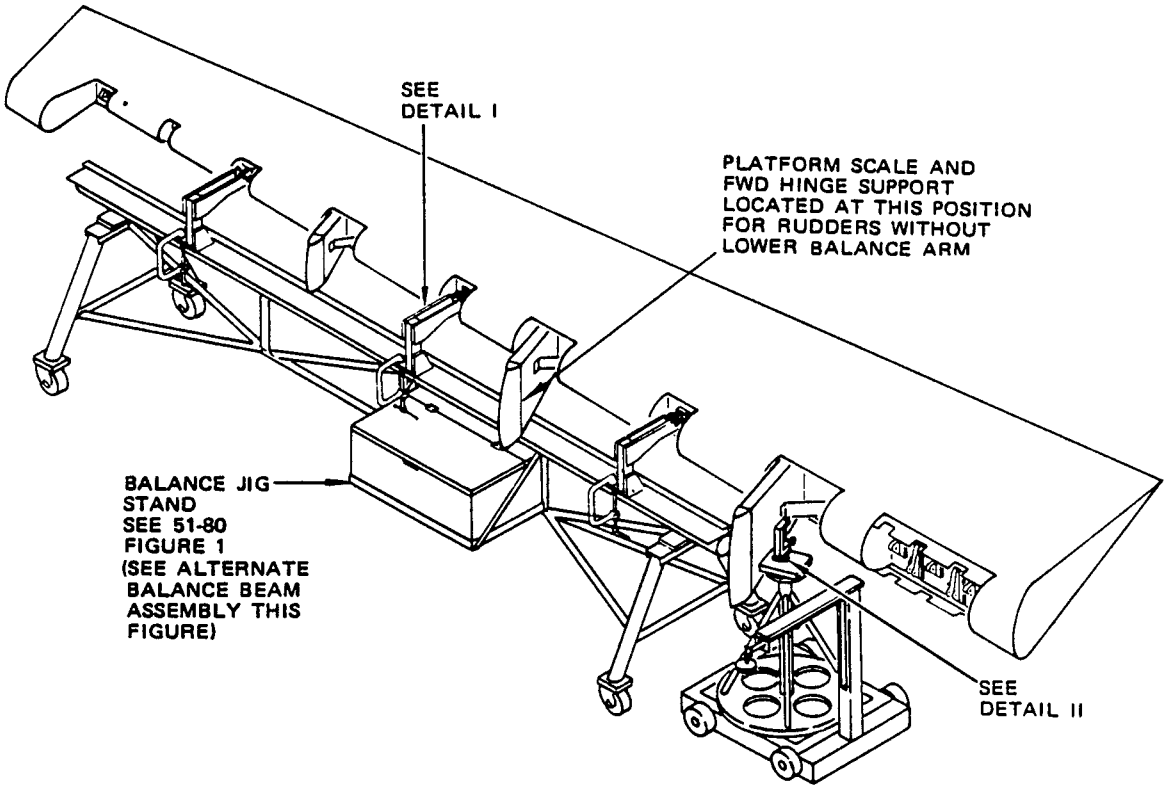

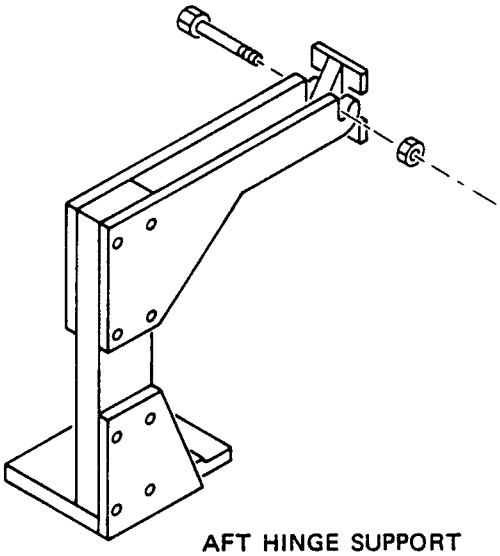

AFT HINGE SUPPORT

DETAIL I

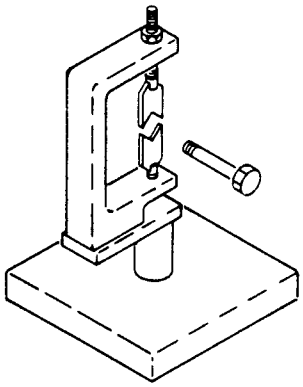

FWD HINGE SUPPORT

DETAIL II

Rudder Support During Balancing
Figure 6 (Sheet 1)

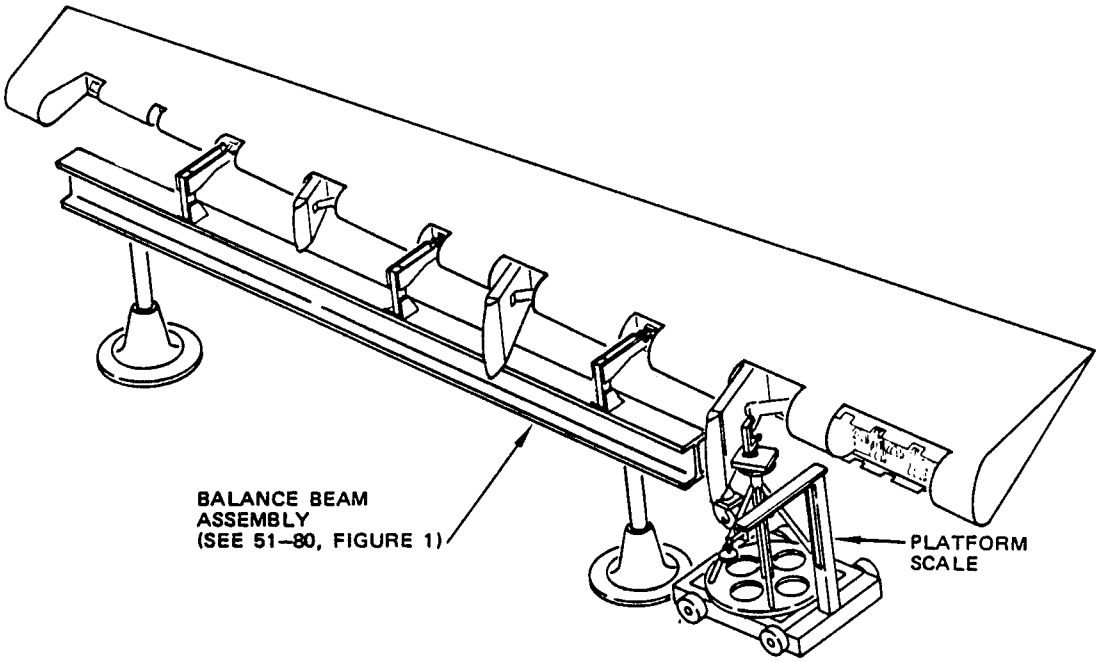

Rudder Support During Balancing
Figure 6 (Sheet 2)

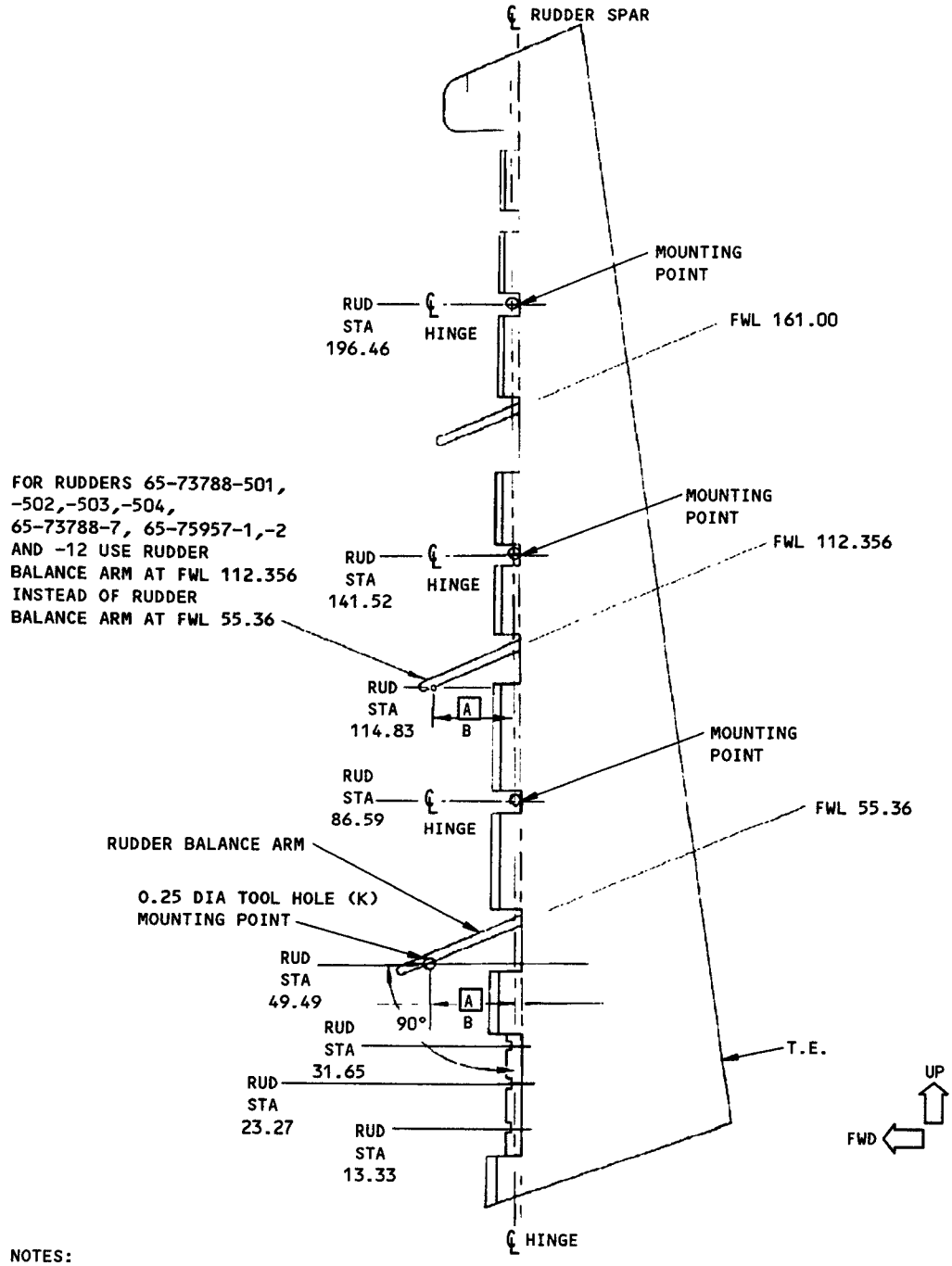

NOTES:

A SEE FIG. 2 FOR DIMENSION Z.

LEFT-HAND SIDE VIEW

Rudder Mounting Point Location Diagram
Figure 7

BOEING PROPRIETARY - Copyright © - Unpublished Work - See title page for details.

RUDDER PART NO.	PREFERRED CHECK BALANCE MOMENT (POUND-INCHES) [B]	PERMISSIBLE CHECK BALANCE MOMENT (POUND-INCHES) [B]	REVISED CHECK BALANCE MOMENT RANGE FOR REPAIR WITHOUT REMOVAL FROM AIRPLANE (POUND-INCHES)		ADJUST WEIGHT TABLE NUMBER
			FIRST REPAIR	SECOND REPAIR	
65-73788 -1,-3,-4 OR -6 65-75339 -1 OR -15	-47.75 TO +28.75	-47.75 TO +28.75	-42.75 TO +23.75	-37.75 TO +18.75	I
65-73788 -2 OR -5 65-75339 -14 OR -16	-47.75 TO -36.69	-47.75 TO +28.75	-42.75 TO +23.75	-37.75 TO +18.75	II
65-73788-7 65-73788 -501,-502 OR -504 65-75957 -1	+705.4 TO +750.0	+705.4 TO +750.0	+710.4 TO +745.0	+715.4 TO +740.0	III
65-73788 -503 65-75957 -2	+705.4 TO +721.2	+705.4 TO +750.0	+710.4 TO +745.0	+715.4 TO +740.0	IV

RUDDER BALANCE REQUIREMENT

NOTES

[B] PREFERRED VS PERMISSIBLE. IF THERE ARE MANY ADJUST WEIGHT SPACES AVAILABLE THEN IT IS DESIRABLE TO AIM FOR THE PREFERRED RANGE. IF THERE ARE NOT MANY SPACES LEFT THEN THE PERMISSIBLE RANGE IS ACCEPTABLE

Rudder Balance Weight Requirements
Figure 8 (Sheet 1)

BOEING PROPRIETARY - Copyright © - Unpublished Work - See title page for details.

USE THIS TABLE FOR RUDDERS 65-73788-1, -3, -4, -6 AND 65-75339-1, -15	
TRIAL MOMENT (W_R) (B) POUND-INCHES	NUMBER OF 69-43281-1 BALANCE WEIGHTS REQUIRED [A]
- 47.75 to + 28.75	0
+ 28.76 to + 39.82	1
+ 39.83 to + 50.89	2
+ 50.90 to + 61.33	3
+ 61.34 to + 71.76	4
+ 71.77 to + 81.86	5
+ 81.87 to + 91.94	6
+ 91.95 to +101.71	7
+101.72 to +111.49	8
+111.50 to +120.85	9
+120.86 to +130.22	10
+130.23 to +139.45	11
+139.46 to +148.68	12
+148.69 to +157.26	13
+157.27 to +165.84	14
+165.85 to +174.11	15
+174.12 to +182.39	16
+182.40 to +190.60	17
+190.61 to +198.82	18
+198.83 to +206.29	19
+206.30 to +213.78	20
+213.79 to +221.04	21
+221.05 to +228.31	22
+228.32 to +238.10	23
+238.11 to +247.88	24
+247.89 to +256.03	25
+256.04 to +264.18	26
+264.19 to +271.44	27
+271.45 to +278.71	28

TABLE I

USE THIS TABLE FOR RUDDERS 65-73788-2, -5 AND 65-75339-14, -16	
TRIAL MOMENT (W_R) (B) POUND-INCHES	NUMBER OF 69-43281-1 BALANCE WEIGHTS REQUIRED [A]
- 47.75 to - 36.69	0
- 36.68 to - 25.62	1
- 25.61 to - 15.16	2
- 15.17 to - 4.75	3
- 4.74 to + 5.35	4
+ 5.36 to + 15.43	5
+ 15.44 to + 25.20	6
+ 25.21 to + 34.98	7
+ 34.99 to + 44.34	8
+ 44.35 to + 53.71	9
+ 53.72 to + 62.94	10
+ 62.95 to + 72.17	11
+ 72.18 to + 80.75	12
+ 80.76 to + 89.33	13
+ 89.34 to + 97.60	14
+ 97.61 to +105.88	15
+105.89 to +114.09	16
+114.10 to +122.31	17
+122.32 to +129.78	18
+129.79 to +137.27	19
+137.28 to +144.53	20
+144.54 to +151.80	21
+151.81 to +161.59	22
+161.60 to +171.37	23
+171.38 to +179.52	24
+179.53 to +187.67	25
+187.68 to +194.93	26
+194.94 to +202.20	27
+202.21 to +209.47	28

TABLE II

Rudder Balance Weight Requirements
Figure 8 (Sheet 2 of 3)

USE THIS TABLE FOR RUDDERS 65-73788-501, -502, -504, 65-73788-7 AND 65-75957-1,-12	
TRIAL MOMENT (W_R) (B) POUND-INCHES	NUMBER OF 69-60716-1 BALANCE WEIGHTS REQUIRED [B]
+705.4 to +750.0	0
+750.1 to +763.9	2
+764.0 to +777.0	4
+777.1 to +788.9	6
+789.0 to +801.5	8
+801.6 to +813.6	10
+813.7 to +823.7	12
+823.8 to +833.7	14
+833.8 to +843.9	16
+844.0 to +854.3	18
+854.4 to +862.6	20
+862.7 to +870.9	22
+871.0 to +879.4	24
+879.5 to +888.1	26
+888.2 to +894.8	28
+894.9 to +901.5	30
+901.6 to +908.5	32

TABLE III

USE THIS TABLE FOR RUDDERS 65-73788-503 AND 65-75957-2	
TRIAL MOMENT (W_R) (B) POUND-INCHES	NUMBER OF 69-60716-1 BALANCE WEIGHTS REQUIRED [B]
+705.4 to +721.2	0
+721.3 to +735.1	2
+735.2 to +748.2	4
+748.3 to +760.1	6
+760.2 to +772.7	8
+772.8 to +784.8	10
+784.9 to +794.9	12
+795.0 to +804.9	14
+805.0 to +815.1	16
+815.2 to +825.5	18
+825.6 to +833.8	20
+833.9 to +842.1	22
+842.2 to +850.6	24
+850.7 to +859.3	26
+859.4 to +866.0	28
+866.1 to +872.7	30
+872.8 to +879.7	32

TABLE IV

NOTE

[A] REFER TO 51-80-7, FIG. 1, DETAIL I FOR LOCATION OF WEIGHTS.

[B] REFER TO 51-80-7, FIG. 1, DETAIL II FOR LOCATION OF WEIGHTS.

Rudder Balance Weight Requirements
Figure 8 (Sheet 3 of 3)

BOEING PROPRIETARY - Copyright © - Unpublished Work - See title page for details.

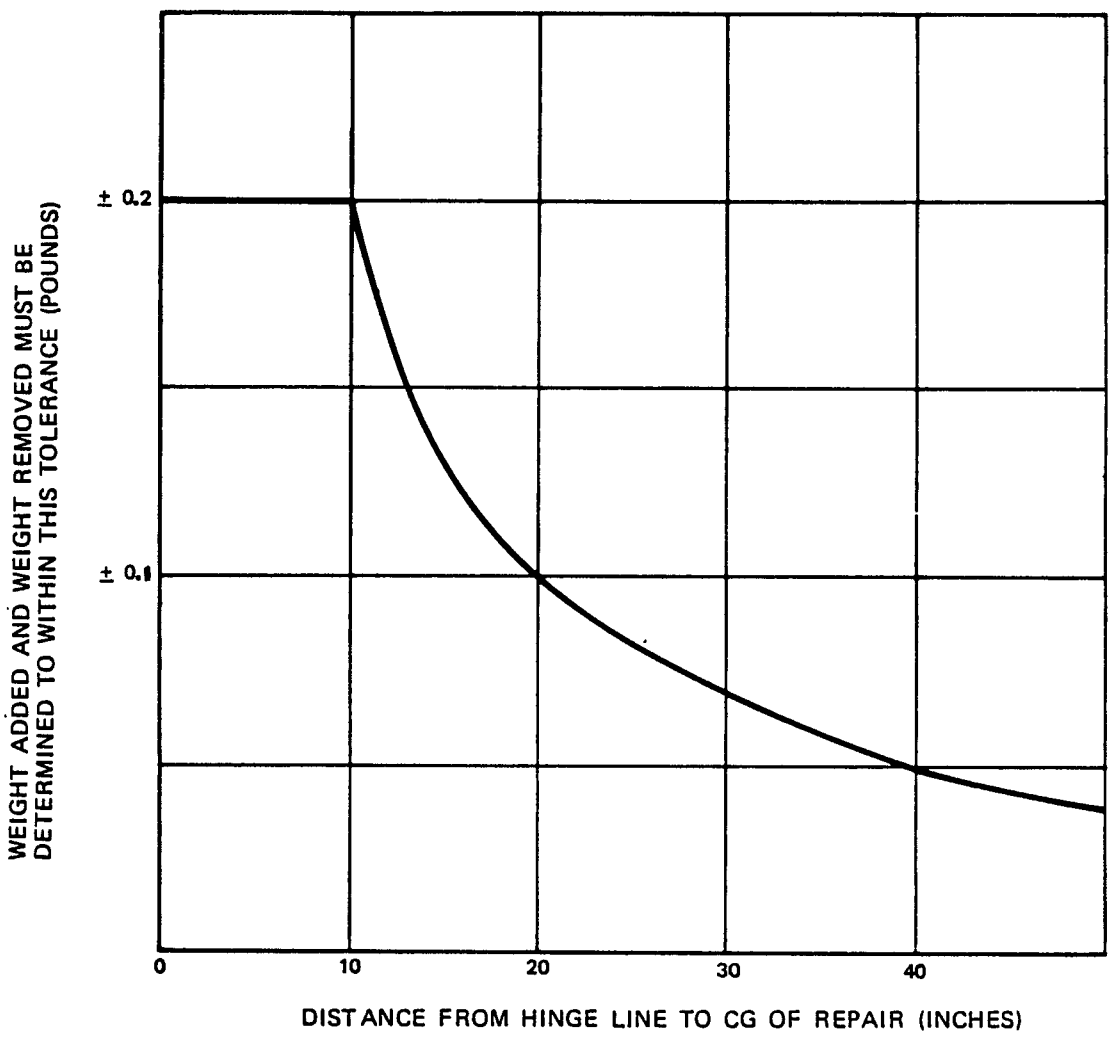

Weight Tolerance Requirements for Balancing Rudder on Airplane
Figure 9

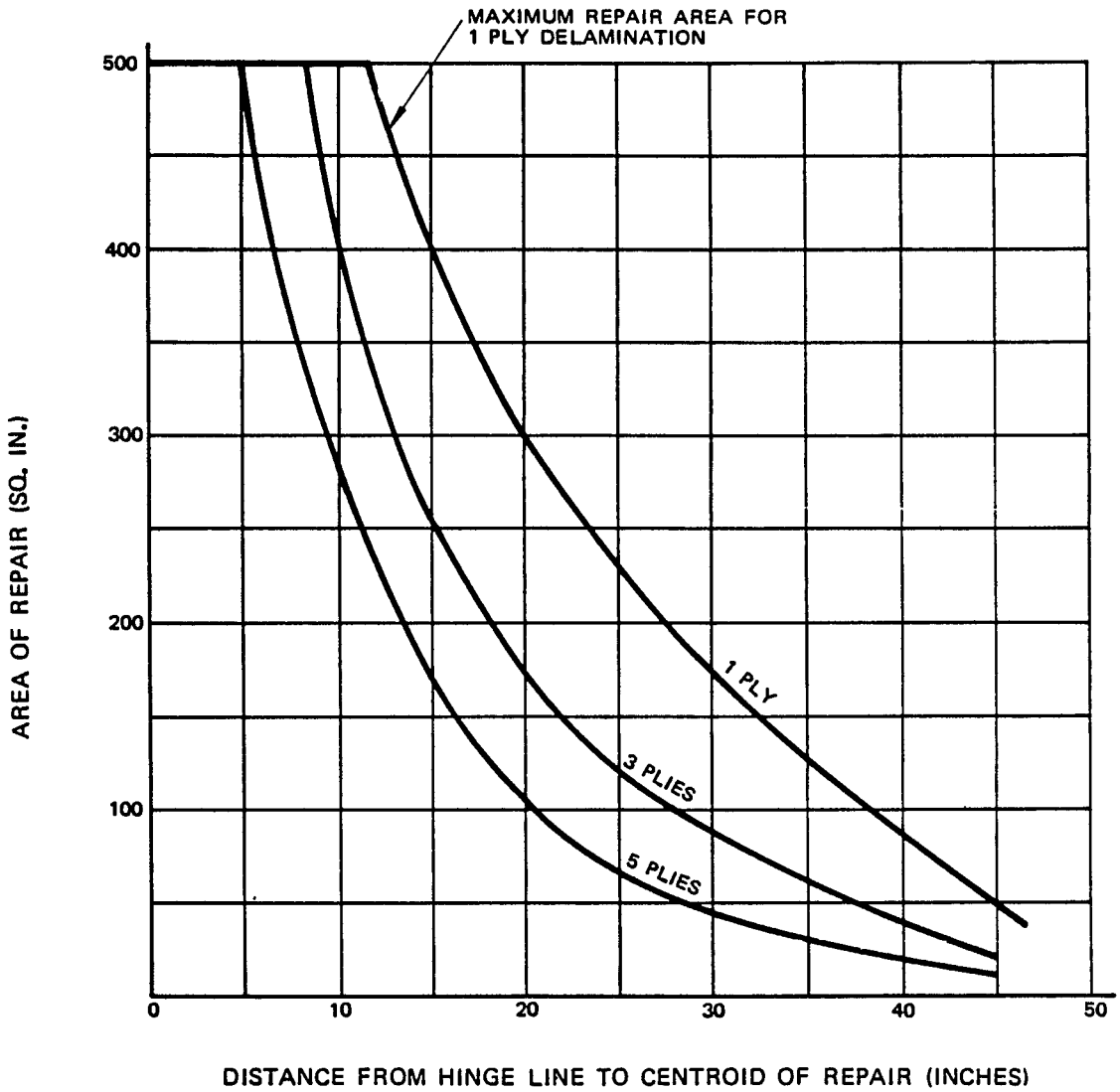

NOTE: THIS CHART SHOWS THE MAXIMUM SIZE OF REPAIR WHICH MAY BE MADE FOR DAMAGE TO SKIN PLIES WITHOUT REMOVAL FOR REBALANCING.

Maximum Size of Skin Repairs
Figure 10

GRAPHITE COMPOSITE CONTROL SURFACE BALANCING

WARNING: USE 51-81 FOR GRAPHITE COMPOSITE CONTROL SURFACE BALANCING. USE 51-80 FOR GLASS FABRIC/METAL CONTROL SURFACE BALANCING. FAILURE TO COMPLY CAN PRODUCE UNDESIRABLE FLUTTER AND DYNAMIC INSTABILITY WHICH COULD AFFECT FLIGHT SAFETY.

1. General

WARNING: ANY COMPONENTS OF THE MAIN CONTROL SURFACE SYSTEMS THAT DO NOT MEET THE BALANCE REQUIREMENTS SPECIFIED IN 51-81 THROUGH 51-81-7 CAN PRODUCE UNDESIRABLE FLUTTER AND DYNAMIC INSTABILITY WHICH COULD AFFECT FLIGHT SAFETY.

A. This subject contains general balancing information applicable to all 737 advanced composite control surfaces. For specific limitations and procedures see the appropriate subject designated in Table I.

COMPONENT	SUBJECT
Aileron	51-81-1
Aileron balance panel	51-81-2
Aileron tab	51-81-3
Elevator	51-81-4
Elevator balance panels	51-81-5
Elevator tab	51-81-6
Rudder	51-81-7

Balancing Subject Index
Table I

B. Each time a control surface is repaired or repainted consideration must be given that the operational balance limit has not been exceeded.

C. The accumulative effect of repairs and repeated painting without removing the old paint can eventually lead to using all of the available adjust weight positions. Should this situation arise consideration should be given to paint removal as a means of regaining an adjustment capability. See 51-21-11 of the 737 Maintenance Manual for paint removal from composite surfaces.

D. When considering the advisability of repair and rebalancing a control surface without placing it on the balance jig, it must be established that it is possible to meet the accuracy criteria specified for calculation of the repair moment. Where it is not practical to meet the accuracy criteria the control surface must be rebalanced on the balance jig.

E. When a control surface is removed for repair it is preferred that it be rebalanced on the jig and not by use of the methods prescribed for rebalancing without the jig.

F. When rebalancing a control surface, consider rebalancing to the center of the allowable moment range, as this will reduce the possibility of balance adjustment for the next repair.

G. All rework operations including repair locations, must be recorded. All control surfaces must have their balance conditions kept up to date.

NOTE: When a control surface cannot be rebalanced to comply with the balance requirements, evaluation by qualified structural engineering personnel of the particular control surface and its repair history will be necessary. Rework of the surface may provide compliance with the balance requirements, otherwise, the surface will have to be replaced.

H. For Definition of Terms see Fig. 4.

2. Measuring Accuracy

A. A weighing device must be used during control surface balancing, for both actual weights and weight reactions. Consequently, accuracy of the balancing cannot be better than the tolerance of the scales. To ensure adequate tolerance, all weighing equipment must be properly selected, calibrated and carefully maintained to minimize weighing errors. Since weight ranges influence platform scale accuracies, Table II lists the required accuracy for selected weight ranges. Linear measurement accuracies are also given in Table II.

WEIGHT RANGE OR LINEAR MEASUREMENT	REQUIRED ACCURACY
6 thru 9.99 (lb)	±0.01 (lb)
10 thru 34.9 (lb)	±0.1% of the measured weight (lb)
35 thru 299.9 (lb)	±0.2% of the measured weight (lb)
300 (lb) and above	±0.25% of the measured weight (lb)
All Linear Measurements	±0.125 (inches)

Weighing and Measuring Tolerances
Table II

3. Estimation of Material Weight for Control Surface Repair

A. Refer to individual component repair subjects for repairs to control surfaces.

B. Refer to Fig. 3 to determine repair material weight for calculating approximate repair moments.

C. Areas, centroids and paint density are shown in par. 4.B and 4.C. for determining control surface balance moments after painting. The areas are for both faces of each control surface and the centroid is the aft distance normal to the hinge centerline and front spar. The areas and centroids account for components painted forward and aft of each respective hinge centerline.

4. Estimation of Weight and Moments Added by Repainting

A. General

(1) To rebalance a repainted control surface without the balance jig, calculate the approximate weight added due to painting by the method described in this paragraph.

(2) This information is only valid when existing paint has not been removed. It is not practical to allow for the weight of a large area of paint removed by calculation.

(3) It is permissible to adjust the balance by calculation for only two repairs or repaintings (without removal of previous coats of paint). When a third repair or repainting or combination is found necessary then the control surface must be rebalanced on the balance jig.

(4) Whenever an aileron tab or elevator tab is repainted it must be reweighed and weight adjustments made per 51-81-3 or 51-81-6.

B. To estimate the weight and moment added by repainting proceed as follows:

(1) Make a sample panel of any light gage material (0.02 to 0.063) 2 feet x 2 feet, measured as accurately as possible.

(2) Weigh the sample panel to the nearest 0.01 pound.

4.B.(3) Position the sample panel on the fixed surface (i.e., wing, vertical or horizontal stabilizer) at about midspan of the control surface and 1 or 2 inches forward of it. Use doublebacked tape or adhesive that can be readily removed to secure it in position. Mask the surrounding area to prevent the paint from marking the fixed surface.

(4) Paint the control surface and the sample panel.

(5) Allow the paint to dry and remove the sample panel. Ensure that it is free from tape or adhesive.

(6) Weigh the sample panel to the nearest 0.01 pound.

(7) Subtract the weight of the original unpainted panel from the weight of the painted panel to obtain the weight of the paint.

(8) Divide the weight of paint by 576 to ascertain the weight per square inch, or divide by 4 to obtain the weight per square foot.

(9) Calculate the Rework Weight (RW) and the Rework Moment (RM). The weight of the added paint is known as the Rework Weight. RW = (Weight of Paint per Unit Area)(Paint Area of Control Surface). The moment caused by this added weight is known as the Rework Moment. RM = (RW)(C.G. Distance Aft of Hinge Line). The areas and C.G. valves in Table III apply only if the entire surface is repainted.

SURFACE	PAINTED AREA		C.G. OF ADDED WT
	SQ IN	SQ FT	(INCHES AFT OF HINGE)
Aileron (less Tab)	3,740	25.97	+ 8.5
Aileron Tab	660	4.58	NOT APPLICABLE (SEE 51-81-3)
Elevator (Less Tab)	9,624	66.83	+ 10.1
Elevator Tab	1,070	7.43	NOT APPLICABLE (SEE 51-81-6)
Rudder	16,640	115.56	+ 14.8

Control Surface Areas and C.G. Locations for
Complete Painting or Repainting of Control Surfaces
Table III

4.B.(10) Calculate the trial Check Balance Moment (CBM) by adding the Rework Moment (RM) to the Static Balance Hinge Moment (SBHM) value stamped on the nameplate of the control surface. This trail CBM is then used in rebalancing the control surface per 51-81-1, 51-81-4, or 51-81-7.

(11) IF the tab is repainted along with the primary control surface then it must meet the requirements of 51-81-3 or 51-81-6.

C. To enable the weight of paint removed from part of a control surface to be calculated, weight information is given in Table IV. An accurate calculation is required to permit a reasonably sized area (up to 16 inches maximum dimension) to be removed and remain within the accuracy criteria specified. The thickness or weight should be established by one of the following methods. Thickness should be measured at several points, if possible, to obtain an average.

(1) Sand paint from a small area down to the surface of the outermost composite ply (taking care not to damage the surface). Measure the paint thickness at this location with a Micrometer Depth Gage.

(2) Using a micrometer, measure thickness of panel or face sheet plies both before and after paint removal. Determine paint thickness by taking the difference between the two measurements. Use this method in an area that will be removed as a part of damage cleanup. If damage cleanup or repair has already been done, determine paint thickness using the method of par. 4.C.(1).

FINISHING MATERIAL	WEIGHT PER UNIT AREA	
	LB PER SQ IN	LB PER SQ FT
Aluminum Flame Spray Coating plus Sealer Resin per 0.001 inch of thickness	0.0000724	0.0104
BMS 10-21 conductive coating, per 0.001 inch of thickness	0.0000556	0.008
BMS 10-79 corrosion resistant primer, per 0.001 inch of thickness	0.0000556	0.008
BMS 10-60 protective enamel, per 0.001 inch of thickness	0.0000486	0.007
Normal application of paint, per 0.001 inches of thickness (layered BMS 10-21, BMS 10-79, BMS 10-60)	0.0000516	0.0074
THE WEIGHT OF NORMAL APPLICATION OF PAINT IS:		
Conductive coating (0.0008 inches thick)	0.0000444	0.0064
Primer (0.0008 inches thick)	0.0000444	0.0064
Enamel (0.0020 inches thick)	0.0000972	0.0140
TOTAL (Paint thickness variation is normally within the tolerance ±0.001 in.)	0.0001860	0.0268
THE WEIGHT OF LOGO PAINT OR DECAL IS:	0.000139	0.02

Weights of Various Finishing Materials
Table IV

4. D. Example: The entire elevator 65C25746-82 is repainted on the airplane. The method given in par. 4.B. is used to calculate the change in moment.

(1) A sample of light gage material is made with carefully measured sides of 2 feet x 2 feet. The weight of the sample is measured on a scale which meets the accuracy criteria of par. 2.A. Measured unpainted panel weight = 2.88 lb.

4.D.(2) The panel is secured on the horizontal stabilizer per par. 4.B.(3). Both the elevator and panel are painted.

(3) Once the paint has dried the painted panel is removed and reweighed.

Measured painted panel weight = 2.99 lb.

Paint weight = painted weight - unpainted weight
= 2.99 - 2.88
= 0.11 lb.

(4) The weight per unit area is calculated by dividing the paint weight by the panel area.

$$\frac{\text{Paint Weight}}{\text{Panel Area}} = \frac{0.11}{(24)(24)} = \frac{0.11}{576} = 0.0001909 \text{ lb/in}^2$$

OR

$$\frac{0.11}{(2)(2)} = \frac{0.11}{4} = 0.0275 \text{ lb/ft}^2$$

(5) The total weight added to the elevator, known as the Rework Weight (RW), is equal to the Paint Weight per Unit Area times Area of the elevator given in par. 4.B.(9) as 9,624 in^2 or 66.83 ft^2.

(Paint Weight per Unit Area)(Area) = Rework Weight (RW)
= (0.0001909 lbs/in^2)(9624 in ^{2}) = +1.84 lb.

OR = (0.00275 lbs/ft^2)(66.83 ft^2) = +1.84 lb.

(6) The change in moment due to repainting, known as the Rework Moment (RM), equals the RW times the elevator's C.G. of added weight given in par. 4.B.(9) as 10.1 inches.

RM = (RW)(C.G.) = (1.84)(10.1) = +18.58 lb-in.

4.D.(7) Using this Rework Moment (RM) of +18.56 lb-in the trail check Balance Moment (CBM) is calculated by adding the RM to the Static Balance Hinge Moment (SBHM) value stamped on the nameplate of the elevator.

For this example:

SBHM = 121.01

trail CBM = SBHM + RM = (+121.01) + (+18.56)

= +139.57 lb-in.

(8) This trial CBM is then used for rebalancing the elevator per 51-81-4.

(9) If the elevator tab is repainted along with the elevator then the added tab paint weight must be accounted for per 51-81-6. This would require actual weighing of the tab since calculating the weight added to a tab is not allowed. Any tab adjust weights that may have to be added per 51-81-6 would be in addition to any balance adjust weights that might have to be added due to the trail CBM of +139.57 lb-in determined in par. 4.D.(7).

5. Tab Adjust Weight System

A. The effective moment of a tab about the hinge line of the major control surface is determined by multiplying the weight of the tab (W) (in pounds) by the distance (L) (in inches) from the C.G. location of the tab to the hinge line of the control surface.

Effective moment of tab = (W)(L)

B. Since (L) is relatively large, small variations in the tab weight can cause large changes in the effective moment about the control surface hinge line. Replacing a tab with a tab of different weight could move the C.G. location of the entire installation outside the specified limits. A complete rebalancing of the surface assembly and tab would thus be necessary for each tab replacement.

5.C. To avoid this difficulty, tab adjust weight systems have been incorporated in the balance weight design for the aileron and the elevator. This makes it possible to use any completed tab assembly on any other balanced surface.

D. See 51-81-3 and 51-81-6 for tab requirements of specific control surfaces.

6. Special Tools and Equipment

A. See Fig. 2 for details of special tools and equipment for control surface balancing.

7. Sign Convention

A. Distances are considered positive (+) if measured aft of the hinge line, negative (-) if measured forward of the hinge line. Weight reactions are considered positive (+) if the surface exerts a downward load on the support, negative (-) if the load is upward (See Fig. 1).

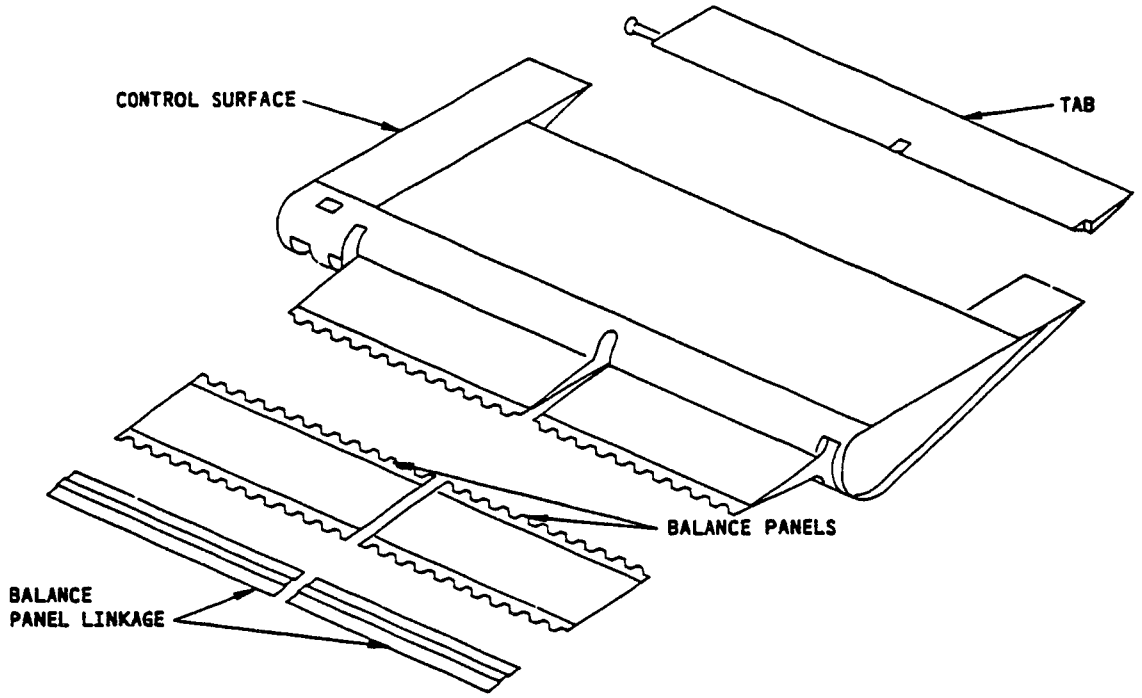

TYPICAL CONTROL SURFACE INSTALLATION

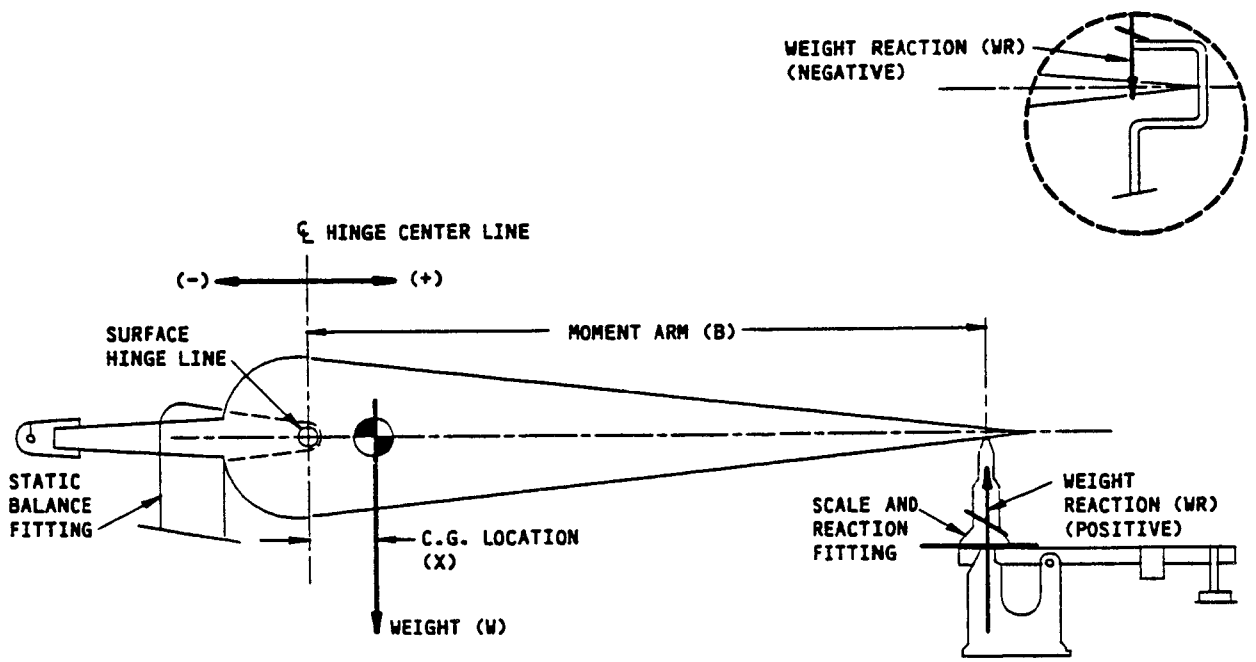

SECTION SHOWING COMPONENT MOUNTED IN BALANCE FITTINGS (TYPICAL)

Sign Convention
Figure 1

204419

SPECIAL TOOLS AND EQUIPMENT				
ITEM	QUANTITY REQUIRED	DETAIL NO. OR DESCRIPTION	PERMISSIBLE EQUIPMENT	SOURCE FOR FUTURE PROCUREMENT
BEAM ASSEMBLY (BALANCE JIG STAND)	1	DETAIL I	BOEING F70330-16 OR EQUIVALENT	PART OF THE BOEING F70330-4 ASSY OR FABRICATE
OPTIONAL BALANCE JIG STAND (ALTERNATE TO BEAM ASSEMBLY)	-	DETAIL II	BOEING FME5-71799 OR EQUIVALENT	REPLACED BY BOEING F70330-16
ADJUSTABLE TOOL STAND ASSEMBLY	1	DETAIL III	BOEING F70330-21 OR EQUIVALENT	PART OF THE BOEING F70330-4 ASSY OR FABRICATE
PLATFORM SCALE	1	DETAIL III	CUSTOMER FURNISHED SCALE WITHIN PRE-SCRIBED ACCURACY OF PAR. 2	ANY SOURCE OR COLT INDUSTRIES INC.- FAIRBANKS WEIGHING DIVISION ST. JOHNSBURG, VT
ADJUSTABLE HINGE SUPPORT	1	DETAIL IV	BOEING F70330-17 OR EQUIVALENT	PART OF THE F70330-4 ASSY OR FABRICATE
HINGE SUPPORTS - TWO USED FOR AILERON TWO USED FOR ELEVATOR THREE USED FOR RUDDER	3	DETAIL V	BOEING F70330-15 OR EQUIVALENT	PART OF THE F70330-3 KIT OR FABRICATE
OPTIONAL AILERON HINGE SUPPORTS	-	-	BOEING TSJ65-46454	REPLACED BY BOEING F70330-15
OPTIONAL ELEVATOR HINGE SUPPORTS	-	-	BOEING 5ME65-73788-2	
OPTIONAL RUDDER HINGE SUPPORTS	-	-	BOEING 5ME65-73788-1	
HINGE SUPPORT - ELEVATOR ONLY	1	DETAIL V (WITH WIDER GRIP THAN F70330-15)	BOEING F70330-14 OR EQUIVALENT	PART OF THE F70330-3 KIT OR FABRICATE
OPTIONAL ELEVATOR HINGE SUPPORT	-	-	BOEING 5ME65-73788-3	-
SUPPORT YOKE ASSY - AILERON	2	DETAIL IV	BOEING F70330-18 OR EQUIVALENT	PART OF THE F70330-4 ASSY OR FABRICATE
SUPPORT BLADE ASSY - ELEVATOR OR RUDDER	2	DETAIL IV	BOEING F70330-19 OR EQUIVALENT	PART OF THE F70330-4 ASSY OR FABRICATE
PROTRACTOR LEVEL	1	DETAIL VI	CUSTOMER FURNISHED	ANY SOURCE
C-CLAMPS	AS REQ'D	6 IN. SIZE	CUSTOMER FURNISHED	ANY SOURCE
0.250 "K" TOOL HOLE BOLT OR PIN - RUDDER ONLY	1	-	AN SUITABLE BOLT OR PIN	ANY SOURCE
NUT	4	-	CL-1-KN OR EQUIVALENT	PART OF THE F70330-4 ASSY OR ANY SOURCE
BOLT	1	-	AN4-16A OR EQUIVALENT	PART OF THE F70330-3 KIT OR ANY SOURCE
WASHER	2	-	AN960-416L OR EQUIVALENT	
NUT	1	-	AN315-4 OR EQUIVALENT	
HAND CALCULATOR	1	-	CUSTOMER FURNISHED	ANY SOURCE

Balancing Equipment
Figure 2 (Sheet 1)

204427

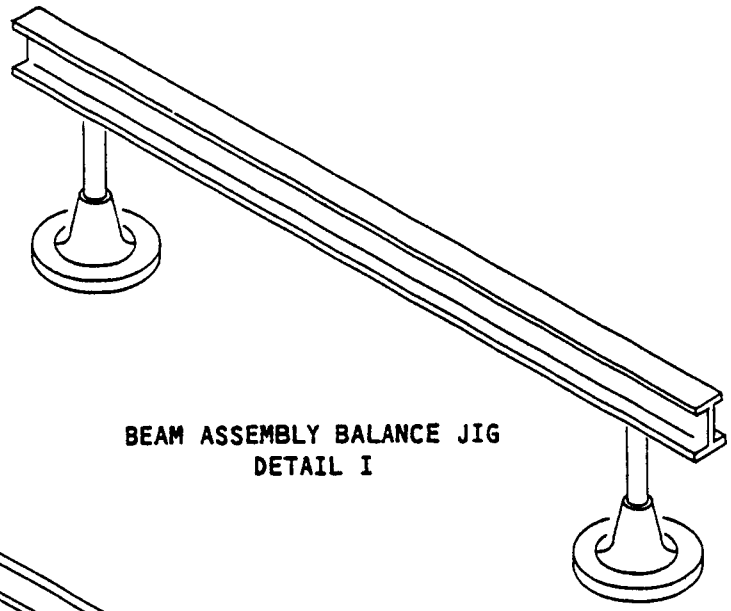

BEAM ASSEMBLY BALANCE JIG
DETAIL I

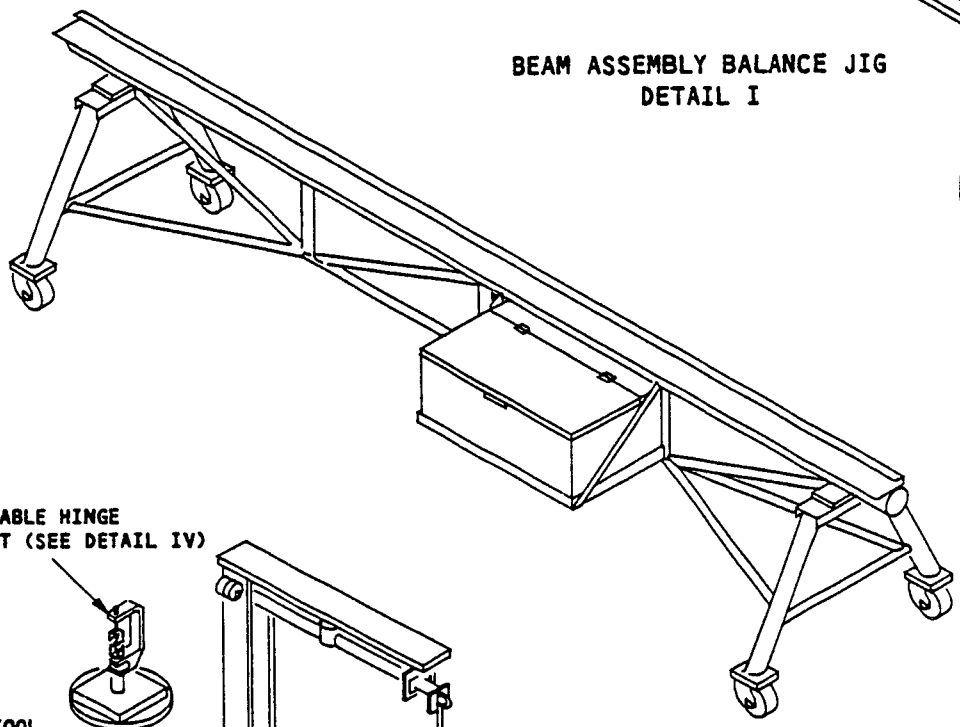

OPTIONAL BALANCE JIG STAND
DETAIL II

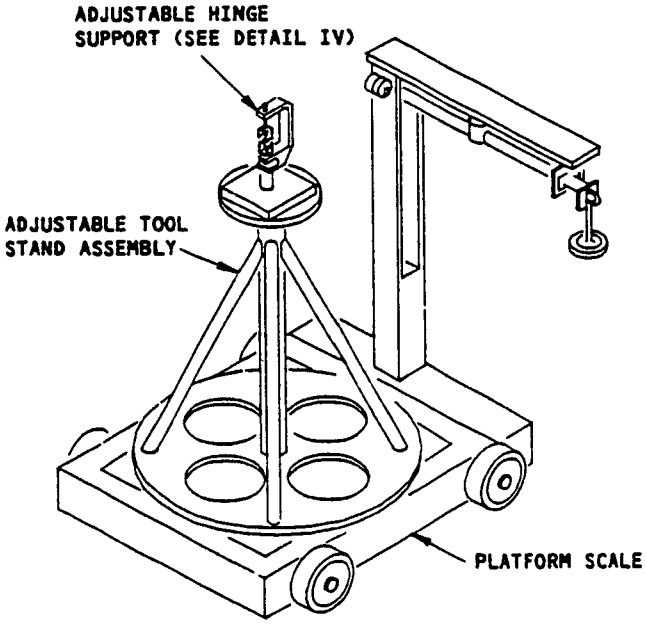

ADJUSTABLE TOOL STAND AND PLATFORM SCALE
DETAIL III

Balancing Equipment
Figure 2 (Sheet 2)

204420

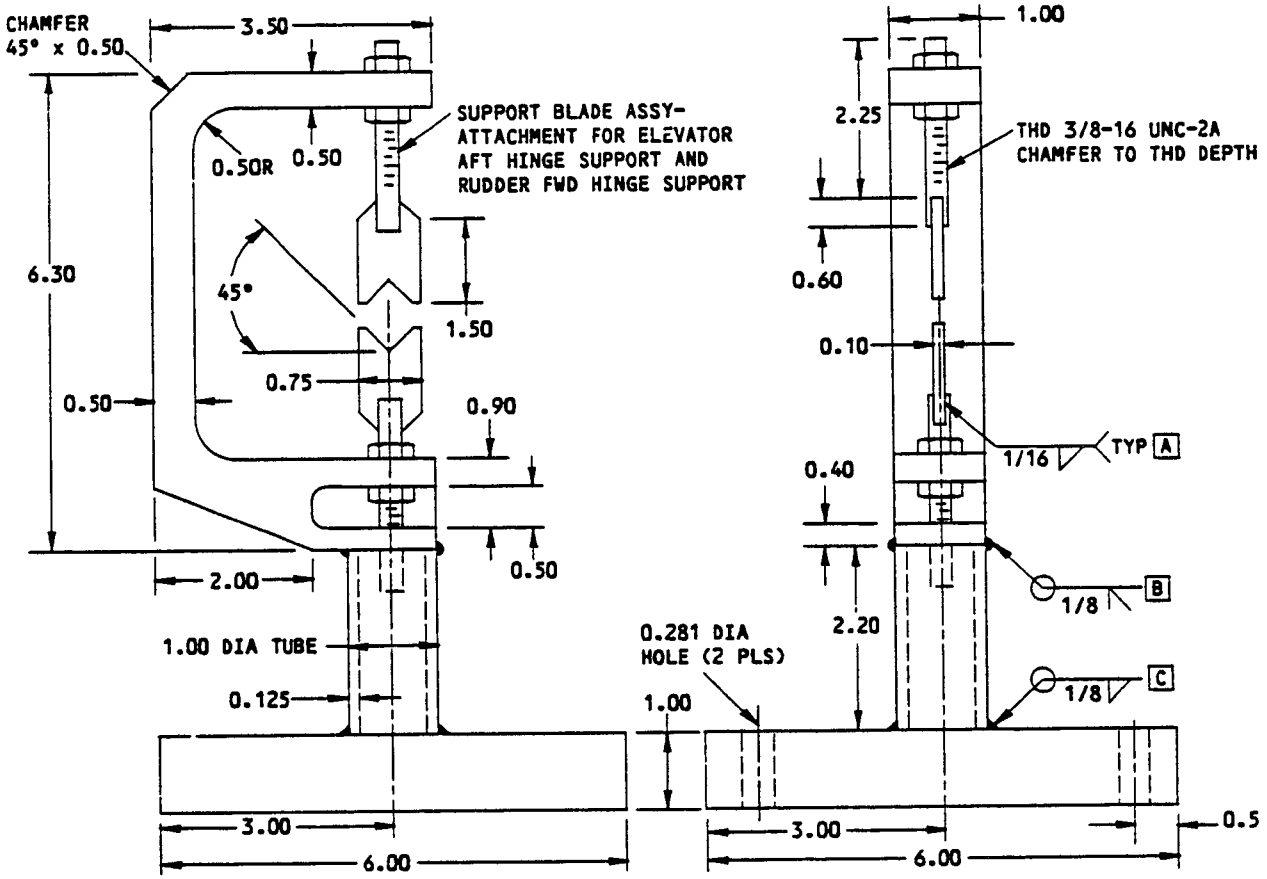

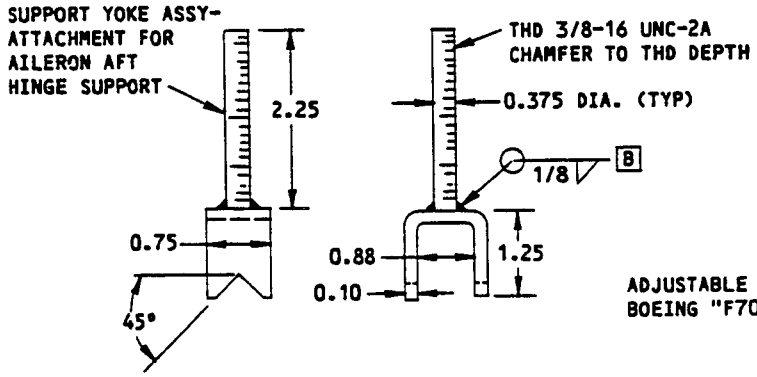

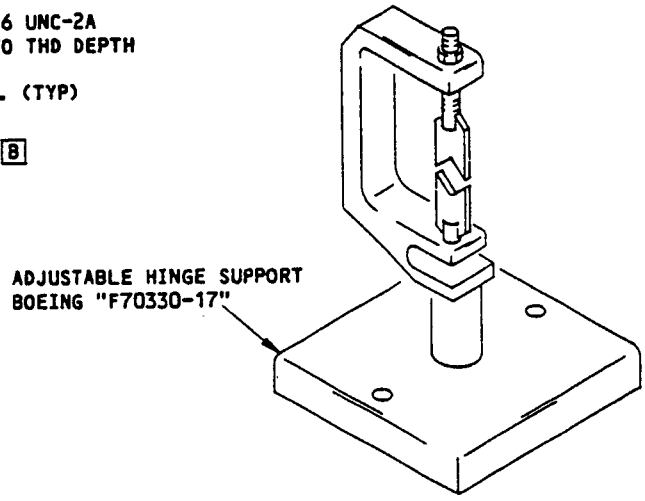

NOTES

A FILLET WELD

B BEVEL WELD ALL AROUND

C FILLET WELD ALL AROUND

ADJUSTABLE HINGE SUPPORT FOR RUDDER BALANCE ARM,
AFT ELEVATOR HINGE, AND AFT AILERON HINGE
DETAIL IV
Balancing Equipment
Figure 2 (Sheet 3)

204425

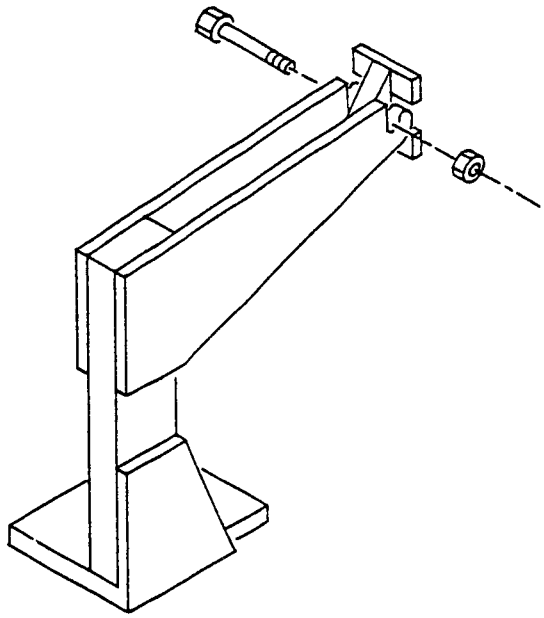

HINGE SUPPORT
DETAIL V

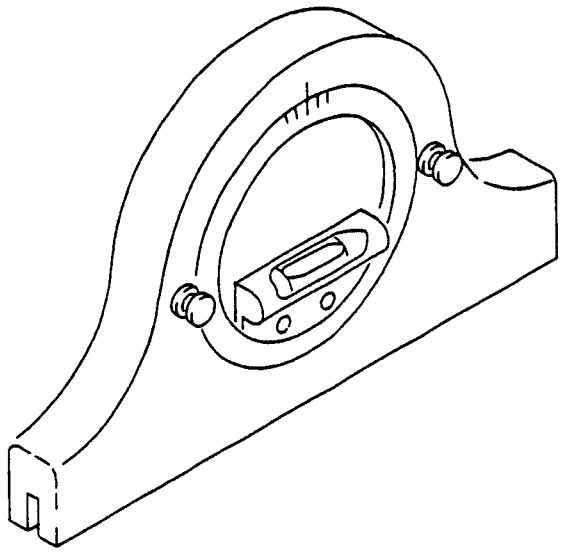

PROTRACTOR LEVEL
DETAIL VI

Balancing Equipment
Figure 2 (Sheet 4)

204421

CONTROL SURFACE MATERIAL	WEIGHT
PREPREG SKIN TYPES	
FIBERGLASS PREPREG	
BMS 8-79, TYPE 1581 OR 7781	0.00067 LBS/IN^2/PLY
BMS 8-79, TYPE 120, CLASS III	0.00027 LBS/IN^2/PLY
BMS 8-139, TYPE 120	0.00027 LBS/IN^2/PLY
GRAPHITE PREPREG (TAPE)	
BMS 8-212, TYPE II, CLASS 1, GRADE 190	0.00042 LBS/IN^2/PLY
BMS 8-212, TYPE II, CLASS 1, GRADE 95	0.00021 LBS/IN^2/PLY
BMS 8-212, TYPE II, CLASS 3, GRADE 95	0.00021 LBS/IN^2/PLY
BMS 8-212, TYPE II, CLASS 3, GRADE 190	0.00042 LBS/IN^2/PLY
BMS 8-168, TYPE II, CLASS 1, GRADE 190	0.00045 LBS/IN^2/PLY
BMS 8-168, TYPE II, CLASS 1, GRADE 95	0.00022 LBS/IN^2/PLY
GRAPHITE PREPREG (FABRIC)	
BMS 8-212, TYPE IV, CLASS 2, STYLE 3K-70-PW	0.00046 LBS/IN^2/PLY
BMS 8-168, TYPE II, CLASS 2. STYLE 3K-70-PW	0.00047 LBS/IN^2/PLY
ARAMID PREPREG (FABRIC)	
BMS 8-219, STYLE 285	0.00050 LBS/IN^2/PLY
WET LAYUP SKIN TYPES	
FIBERGLASS WITH RESIN	
BMS 9-3, TYPE D, STYLE 120	0.00030 LBS/IN^2/PLY
BMS 9-3, TYPE H2, OR H3 STYLE 181-150	0.00083 LBS/IN^2/PLY
GRAPHITE WITH RESIN	
BMS 9-8, TYPE I, CLASS 2, GRADE 3, STYLE 3K-70-PW	0.00055 LBS/IN^2/PLY
ARAMID WITH RESIN	
BMS 8-219, STYLE 285	0.00048 LBS/IN^2/PLY
CORES	
NON-METALLIC HONEYCOMB	
BMS 8-124, TYPE II, CLASS I, GRADE 3.0	0.0017 LBS/IN^3
BMS 8-124, TYPE V, CLASS IV, GRADE 3.0	0.0017 LBS/IN^3

Control Surface Material Weight
Figure 3 (Sheet 1)

204424

CONTROL SURFACE MATERIAL	WEIGHT
ADHESIVE FILMS	
HONEYCOMB ASSEMBLY BONDING (225-250° CURE)	
BMS 5-101, TYPE II, GRADE 10	0.00042 LBS/IN^2
COMPOSITE BONDING (250° CURE)	
BMS 5-129, TYPE 2, CLASS IA OR CLASS IIA, GRADE 15	0.00056 LBS/IN^2
BMS 5-129, TYPE 2, CLASS IIB OR CLASS IIC, GRADE 15	0.00059 LBS/IN^2
BMS 5-51, TYPE 2, CLASS I OR II, GRADE 15	0.00056 LBS/IN^2
BMS 5-80, TYPE 2, GRADE 15	0.00059 LBS/IN^2
COMPOSITE BONDING (350° CURE)	
BMS 8-245, TYPE II, CLASS 1, GRADE 05	0.00035 LBS/IN^2
BMS 8-245, TYPE II, CLASS 1, GRADE 03	0.00021 LBS/IN^2
ADHESIVES	
BMS 8-207, TYPE I, CLASS 1 OR 2	0.0470 LBS/IN^3
BMS 5-92, TYPE I	0.0465 LBS/IN^3
FOAMING ADHESIVE (SEE GRAPH I)	
BMS 5-90, TYPE 2, GRADE 50	0.00274 LBS/IN^3
POTTING COMPOUND	
BMS 5-28, TYPE 7	0.032 LBS/IN^3

Control Surface Material Weight
Figure 3 (Sheet 2)

204422

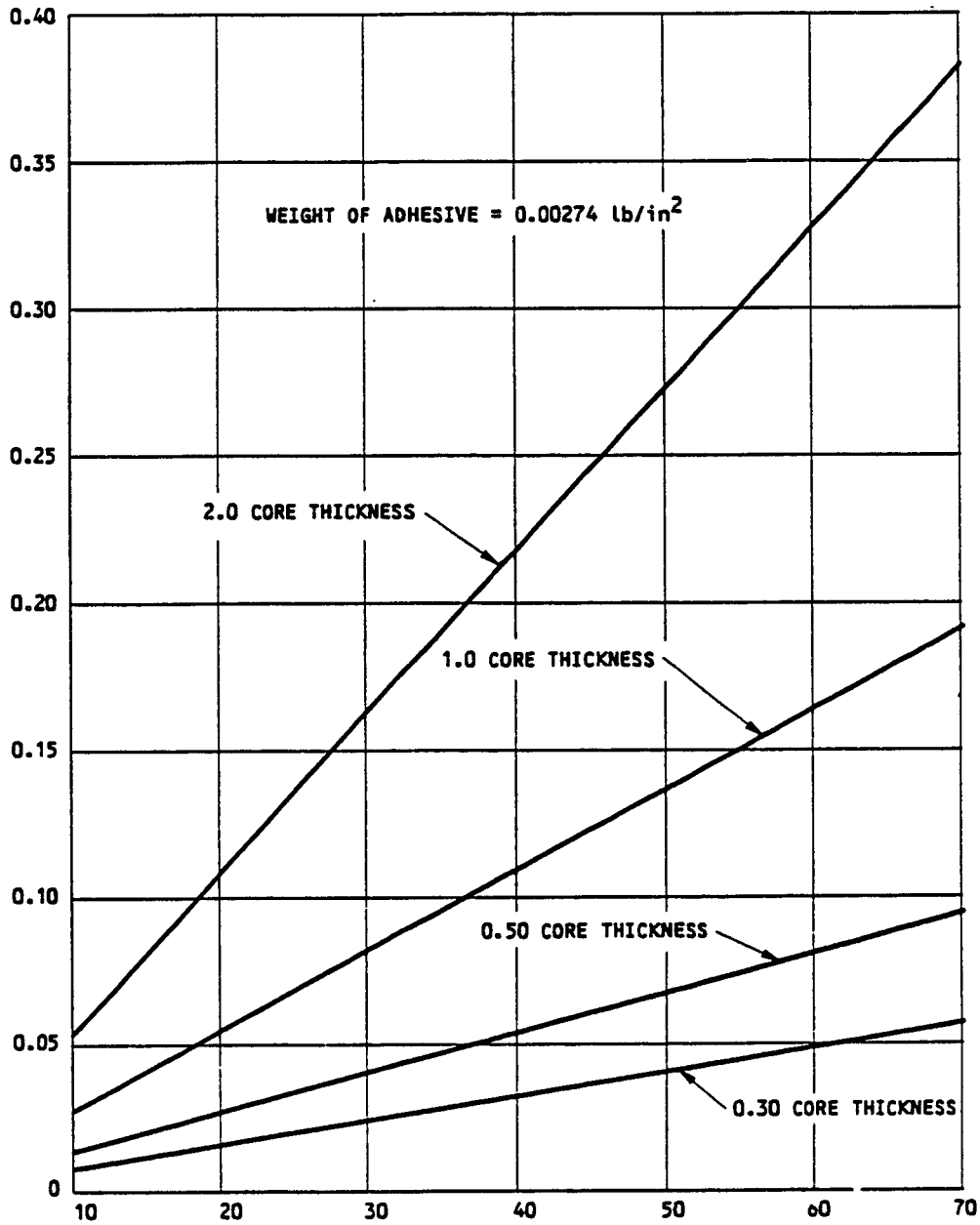

PERIMETER OF CORE PLUG (IN.)
(LENGTH OF ADHESIVE TO ENCIRCLE CORE PLUG)

WEIGHT OF BMS 5-90, TYPE 2N, CLASS 350, GRADE 50 FOAMING ADHESIVE
FOR SPLICING
GRAPH I

Control Surface Material Weight
Figure 3 (Sheet 3)

204423

Static Balance
For the purposes of this document, a control surface or control surface installation is said to be statically balanced when the center of gravity (C.G.) is located within the limits specified.

NOTE: This is not the definition of true static balance, which would require the C.G. to be located on the hinge line of the surface.

Moment Arm
The horizontal distance from the hinge centerline to the point of application of a weight, or to the point where the weight reaction is measured.

Moment
Moment (M) is the product of weight or weight reaction times its moment arm.

Actual Moment
A measure of the tendency of a surface or component to rotate about its own hinge line. The rotational tendency is dependent upon the weight and C.G. location of the component.

The actual moment is determined in practice by measuring the weight reaction (WR) at some moment arm (B). The actual moment is then obtained by multiplying the weight reaction by the moment arm.

Actual Moment = (WR)(B)

Effective Moment
A measure of the tendency of a component of the installation to rotate the control surface about the hinge line of the surface. It is dependent upon the weight and C.G. location of the component and the geometry of the linkage involved.

Rework Moment (RM)
Rework moment is the change in a control surface balance moment due to repair or repaint of the surface. It is the difference between material removed and material added multiplied by the distance of the rework centroid from the hinge centerline. Repair refers to a localized or concentrated change in material weight. Repaint refers to a distributed change in material weight.

Definitions of Terms
Figure 4 (Sheet 1)

Trial Check Balance Moment (Trial CBM)

Actual moment of a surface, or component, in which the object is to obtain a preliminary moment reading of the surface. The Trial CBM is then used in the balancing procedure to determine the number of Balance Adjust Weights required to bring the surface moment within the limits described in the Balance Procedure of each control surface. The Trial CBM becomes the Static Balance Hinge Moment when within these limits.

Static Balance Hinge Moment (SBHM)

Actual moment of a surface or component obtained after the required number of adjust weights are put in place. The Trial CBM becomes the SBHM when within the limits described in the Balance Procedure of each control surface. This is the final moment and its value is stamped on the nameplate provided on each surface. It should be noted that the moment which appears on the nameplate is only the "effective moment" of that portion of the control system, which is the control surface less those items as described in the balance procedure on each surface, and not the effective moment of the complete installation. Each surface as described in the Balance Procedures, is that portion of the complete installation which has provisions for adjustment (adjust wts) to change the Actual Moment such that the complete installation will be within required center of gravity limits.

Weight Reaction (WR)

Weight reaction is the force (in pounds) of a control surface acting on a support point at a given distance from its hinge line. Weight reaction is determined by using a weighing scale under the reaction point in the balance jig.

Basic Balance Weights

Basic balance weights, installed during manufacture on every balanced surface are those weights which initially satisfy the surface balance requirements to meet flutter criteria. They are made of both fixed and adjustable weights.

Fixed Balance Weights

Fixed balance weights are specially designed weights installed on a control surface forward of the hinge centerline at the time of manufacture. They are relatively large and are the major portion of the basic balance weights.

Definitions of Terms
Figure 4 (Sheet 2)

GRAPHITE COMPOSITE AILERON BALANCE PROCEDURE

WARNING: USE 51-81-1 FOR GRAPHITE COMPOSITE AILERON BALANCING. USE 51-80-1 FOR GLASS FABRIC/METAL AILERON BALANCING. FAILURE TO COMPLY CAN PRODUCE UNDESIRABLE FLUTTER AND DYNAMIC INSTABILITY WHICH COULD AFFECT FLIGHT SAFETY.

1. Aileron Balance Requirements - General

NOTE: For definition of terms and general control surface balancing procedures see 51-81.

A. This section presents the operational (in-service) balance requirements and rebalancing procedure for the aileron after a rework operation (repair or repaint). For aileron balance panel procedures see 51-81-2 and for aileron tab procedures see 51-81-3.

B. The aileron must be balanced so that the Check Balance Moment (CBM) lies within the limits given in Table I, Fig. 1. The limits vary with the number of times the aileron has been reworked and rebalanced without the balance jig, so care must be taken to ensure that the correct figures are used.

C. For configuration of the aileron at time of balance on the balance jig, see Fig. 6.

D. Due to the configuration of the wing, addition of aileron balance adjust weights to the aileron is not possible without the removal of the aileron from the airplane. Aileron tab adjust weights may be added to the aileron while it is on the airplane by removing the trailing edge access panels on the lower surface of the wing.

E. For Removal/Installation of the aileron refer to 27-11 of the 737 Maintenance Manual.

2. Rework Operations Which Do Not Require Rebalancing

A. Ailerons of known balance condition which remain within the limits specified in Fig. 1, Table I after the rework moment (RM) has been added or subtracted, do not require balance adjustment. (See paragraph 3.B for calculation procedure).

B. All rework moments must be recorded and must be taken into account when a further repair or repainting is carried out. Record each occasion when the aileron has been repaired or repainted without rebalancing on the balance jig. The repair type, location, date, and the number of spaces available for weight addition should also be included.

3. Rebalancing a Reworked Aileron Without the Balance Jig

A. Provided that there is space for the addition of the required adjust weights, an aileron may be rebalanced without the Balance Jig if the following criteria can be met.

(1) The Rework Weight (RW) of the repair or paint (weight added minus weight removed) does not exceed 1.5 pounds (as calculated in par. 3.B).

(2) The Rework Moment (RM) of the repair or paint about the hinge line does not exceed 15 pound-inches (as calculated in par. 3.B).

(3) The weight of material removed (or lost due to damage) and the weight of material added must be determined within the tolerance specified in Fig. 7. This tolerance must account for the tolerance of the weighing equipment, inaccuracy of estimation of weight of material removed and the inaccuracy in determining the weight of repair materials or paint. See 51-81 for the degree of accuracy that can be achieved with careful workmanship.

(4) The distance from the hinge line to the center of gravity (C.G.) of the rework must be determined to within ± 0.20 inch. This tolerance must include any possible error in estimating the position of the C.G. and in measuring the distance to the hinge line due to accuracy of equipment.

(5) Not more than two consecutive repairs or repaintings or combination may be carried out without rebalancing of the aileron on the balance jig. A third repair or repainting necessitates rebalancing in accordance with par. 5.

NOTE: Repainting the entire aileron in accordance with the instructions in 51-81 par. 4 will meet the conditions of the above criteria.

B. Adjust the aileron balance as follows.

(1) Calculate the Check Balance Moment (CBM):

NOTE: Strictly maintain sign conventions per 51-81 par. 7 except where noted.

3.B.(1)(a) Measure the distance D (see Fig. 2). D is the distance from the rework C.G. along the skin surface to the skin leading edge:

D = _____ in.

(b) Calculate the distance Y (see Fig. 2). Y is the distance from the aileron hinge centerline to the rework C.G. perpendicular to the hinge line and parallel to the aileron chord line:

$$Y = (D)(\cos 7°) + 0.95$$
$$= (D)(0.9925) + 0.95$$
$$= _____ \text{ in.}$$

(c) Weigh or calculate Weight removed (Wr). See Example 1. Wr is the Weight removed due to rework:

Wr = +_____ lb. (KEEP POSITIVE)

(d) Weigh or calculate Weight added (Wa). See Example 1 and 2. Wa is the Weight added due to rework:

Wa = _____ lb.

(e) Calculate Rework Weight (RW). RW is the net change in weight due to rework:

RW = Wa - Wr = _____ lb

NOTE: RW must be less than or equal to 1.5 lb. or the aileron must be rebalanced on the balance jig.

(f) Calculate Rework Moment (RM). RM is the net change in balance moment due to rework:

RM = (RW)(Y) = _____ lb-in.

NOTE: RM must be less than or equal to 15 lb.-in. or the aileron must be rebalanced on the balance jig.

3.B.(1)(g) Calculate the trial Check Balance Moment (trial CBM). The trial CBM is the final moment (Static Balance Hinge Moment) if within given limits. Static Balance Hinge Moment (SBHM) is the previous final moment value stamped on the nameplate of each control surface.

trial CBM = SBHM + RM = _____ lb. in.

(2) Check the records to determine if this surface has been reworked before without the Balance Jig. If it has then this will be the second rework. If it has been reworked twice before, then it must be removed and rebalanced on the Balance Jig per par. 5.

(3) If this is a first or second rework without the Balance Jig then go to Fig. 1, Table I under the appropriate column. If the trial CBM of the repaired or repainted aileron falls within the allowable range specified then no rebalancing is required and its value becomes the new Static Balance Hinge Moment (SBHM). If not then go on to the next step. Stamp this new moment (SBHM) on the nameplate. Record the fact that the aileron has been repaired once (or twice) without the Balance Jig and also give the repair type, location, and the date.

(4) If the trial Check Balance Moment of the reworked aileron falls outside of the values specified in Fig. 1, Table I, then the aileron's balance must be adjusted. The number of aileron balance adjust weights required may be determined by the table method described below.

(a) Determine the number of adjust weights (N) required by using the Aileron Balance Table (Refer to Fig. 1, Table II).

1) Select a Check Balance Moment range from the left column of Table II which falls anywhere within the allowable limits specified in Table I. This will be referred to as the desired CBM range. The desired CBM acts as a goal to aim for.

2) Follow the row of the desired CBM range to the right until reaching a *. This * is at the top of the effective column from which the number of required adjust weights will be read.

3) Having calculated a trial CBM from par. 3.B.(1) go to the Check Balance Moment column in Table II and find the row which this trial CBM lies in.

3.B.(4)(a)4) Follow the row of the trial CBM to the right until reaching the effective column from par. (2). The corresponding number in that column is the number of adjust weights (N) required to move the trial CBM into the desired CBM range.

NOTE: If this value of (N) is greater than the weight spaces available then the balance might still be brought into allowable range by setting N equal to the number of aileron balance adjust weights it takes to fill those spaces and proceeding onto the next step. If not, then keep the value of N from the table and proceed onto the next step.

(b) Remove the aileron per 27-11 of the Maintenance Manual to gain access to the balance weights.

(c) Install Boeing balance weights 69-46492-1 or 69-38850-4 in the positions indicated in Fig. 2 and 3. See Fig. 8 for aileron balance adjust weight illustration.

(d) Calculate the new Static Balance Hinge Moment (SBHM) using the actual number of weights installed as the value of N.

new SBHM = (-N)(1.45) + trial CBM = _____lb-in.

NOTE: This new SBHM value must fall within the specified limits of Table I. If not, then rebalance the aileron on the jig where the limits are less strict for rebalancing. If the limits are still not met, then the aileron may need to be reworked or may need to be replaced (see 51-81, par. 1.C.).

(e) If this new SBHM value falls within specified limits of Table I then stamp its value on the nameplate. Record the fact that the aileron has been rebalanced without the Balance Jig and give the rework type, the fact that it is a first or second rework, and the location and date of the rework. The number of spaces for weight addition should also be included.

4. Sample Calculations - Repairs Which May be Rebalanced Without the Balance Jig

A. The following examples demonstrate the type of procedures to be followed when calculating the Rework Moment (RM) to determine the Check Balance Moment (CBM). Two examples are given, one case which does not require rebalance and one which requires rebalance with adjust weights.

PART	ALLOWABLE CHECK BALANCE MOMENT (CBM) RANGE OR STATIC BALANCE HINGE MOMENT (SBHM) RANGE					
	PREFERRED RANGE AFTER REBALANCE ON BALANCE JIG	PERMISSIBLE RANGE AFTER REBALANCE ON BALANCE JIG	PREFERRED RANGE AFTER FIRST REWORK WITHOUT THE BALANCE JIG	PERMISSIBLE RANGE AFTER FIRST REWORK WITHOUT THE BALANCE JIG	PREFERRED RANGE AFTER SECOND REWORK WITHOUT THE BALANCE JIG	PERMISSIBLE RANGE AFTER SECOND REWORK WITHOUT THE BALANCE JIG
AILERON 65C25911	-37.0 TO -29.0 INCLUSIVE (POUND-INCHES)	-37.0 TO -21.0 INCLUSIVE (POUND-INCHES)	-35.0 TO -29.0 INCLUSIVE (POUND-INCHES)	-35.0 TO -23.0 INCLUSIVE (POUND-INCHES)	-33.0 TO -29.0 INCLUSIVE (POUND-INCHES)	-33.0 TO -25.0 INCLUSIVE (POUND-INCHES)

TABLE I [A]

NOTES

- REFER TO FIG. 8 FOR ILLUSTRATION OF AILERON BALANCE ADJUST WEIGHT

[A] PREFERRED VS PERMISSIBLE. IF THERE ARE MANY ADJUST WEIGHT SPACES AVAILABLE THEN IT IS DESIRABLE TO AIM FOR THE PREFERRED RANGE. IF THERE ARE NOT MANY SPACES LEFT THEN THE PERMISSIBLE RANGE IS ACCEPTABLE

[B] IF THE NUMBER OF WEIGHTS REQUIRED IS GREATER THAN THE WEIGHT SPACES AVAILABLE THEN CALCULATE THE NEW STATIC BALANCE HINGE MOMENT FROM PAR. 3.B.(4)(d) USING THE NUMBER OF WEIGHT SPACES REMAINING AS (N) INSTEAD OF THE VALUE FROM TABLE II

Aileron Balance Tables
Figure 1 (Sheet 1)

204300

AILERON BALANCE TABLE

AILERON ASSEMBLY 65C25911, 0.296 LB. ADJUST WEIGHTS 69-46492-1, OR 69-38850-4

NUMBER OF ADDITIONAL AILERON BALANCE ADJUST WEIGHTS (N) REQUIRED TO ATTAIN A DESIRED CHECK BALANCE MOMENT* (CBM) FROM A GIVEN TRIAL CHECK BALANCE MOMENT (CBM)

TABLE BASED ON EQUATION (REF):

$$N = \frac{(\text{trial CBM} - \text{desired CBM})}{(4.9)(\text{weight of adjust wt.})}$$

DESIRED CHECK BALANCE MOMENT RANGE* / TRIAL CHECK BALANCE MOMENT RANGE										
-37.00 THRU -34.80	*									
-34.79 THRU -33.35	1	*								
-33.34 THRU -31.90	2	1	*							
-31.89 THRU -30.45	3	2	1	*						
-30.44 THRU -29.00	4	3	2	1	*					
-28.99 THRU -27.55	5	4	3	2	1	*				
-27.54 THRU -26.10	6	5	4	3	2	1	*			
-26.09 THRU -24.65	7	6	5	4	3	2	1	*		
-24.64 THRU -23.20	8	7	6	5	4	3	2	1	*	
-23.19 THRU -21.75	9	8	7	6	5	4	3	2	1	*
-21.74 THRU -20.30	10	9	8	7	6	5	4	3	2	1
-20.29 THRU -18.85	11	10	9	8	7	6	5	4	3	2
-18.84 THRU -17.40	12	11	10	9	8	7	6	5	4	3
-17.39 THRU -15.95	13	12	11	10	9	8	7	6	5	4
-15.94 THRU -14.50	14	13	12	11	10	9	8	7	6	5
-14.49 THRU -13.05	15	14	13	12	11	10	9	8	7	6
-13.04 THRU -11.60	16	15	14	13	12	11	10	9	8	7
-11.59 THRU -10.15	B	16	15	14	13	12	11	10	9	8
-10.14 THRU - 8.70	B	B	16	15	14	13	12	11	10	9
- 8.69 THRU - 7.25	B	B	B	16	15	14	13	12	11	10
- 7.24 THRU - 5.80	B	B	B	B	16	15	14	13	12	11
- 5.79 THRU - 4.35	B	B	B	B	B	16	15	14	13	12
- 4.34 THRU - 2.90	B	B	B	B	B	B	16	15	14	13
- 2.89 THRU - 1.45	B	B	B	B	B	B	B	16	15	14
- 1.44 THRU 0.0	B	B	B	B	B	B	B	B	16	15
+ 0.01 THRU + 1.95	B	B	B	B	B	B	B	B	B	16

TABLE II

Aileron Balance Tables
Figure 1 (Sheet 2)

204294

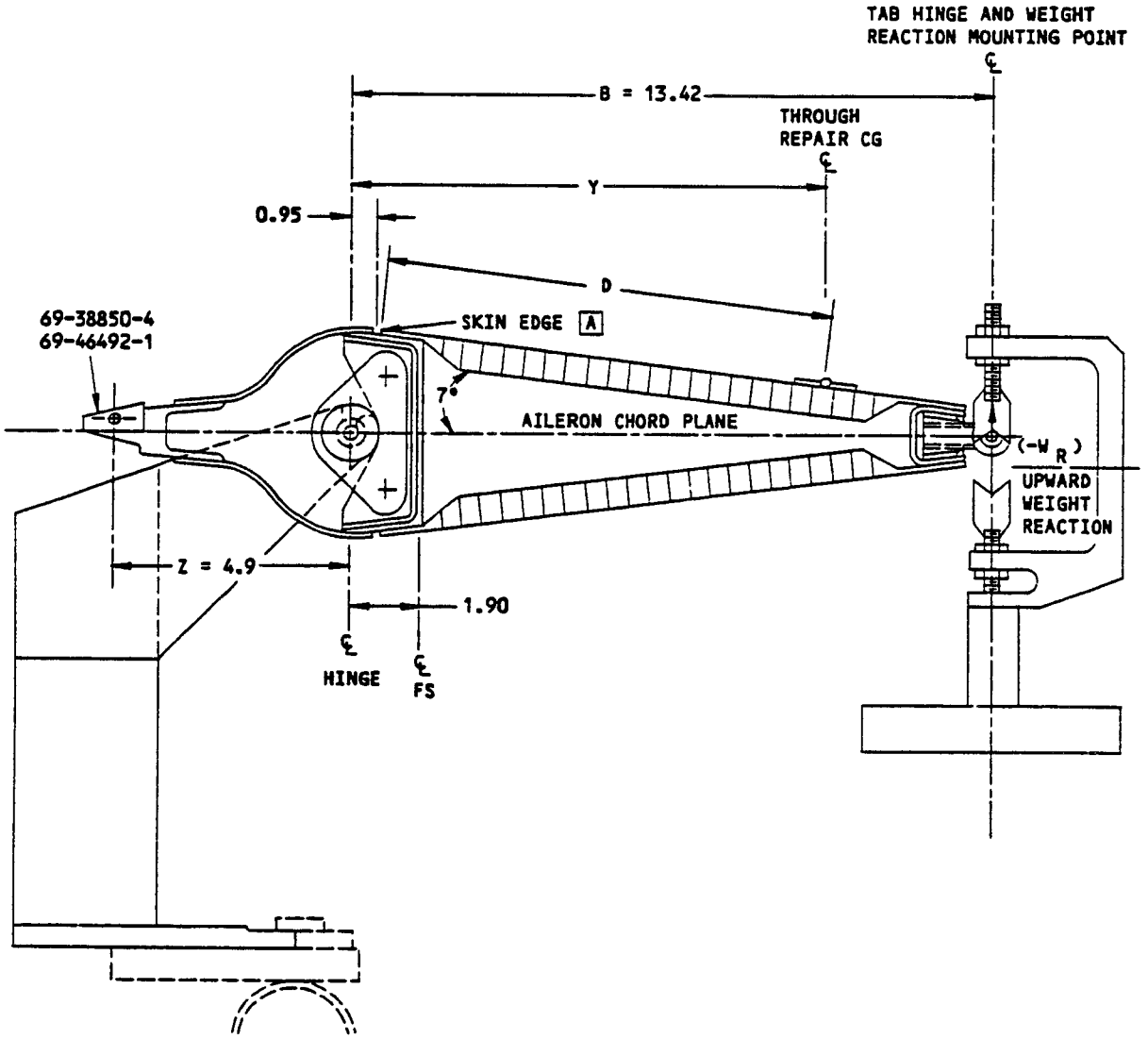

NOTES

A THE TRACE OF THE SKIN'S LEADING EDGE, IGNORING THE INDENTATIONS AT HINGE LOCATIONS

Aileron Balancing Diagram
Figure 2

204301

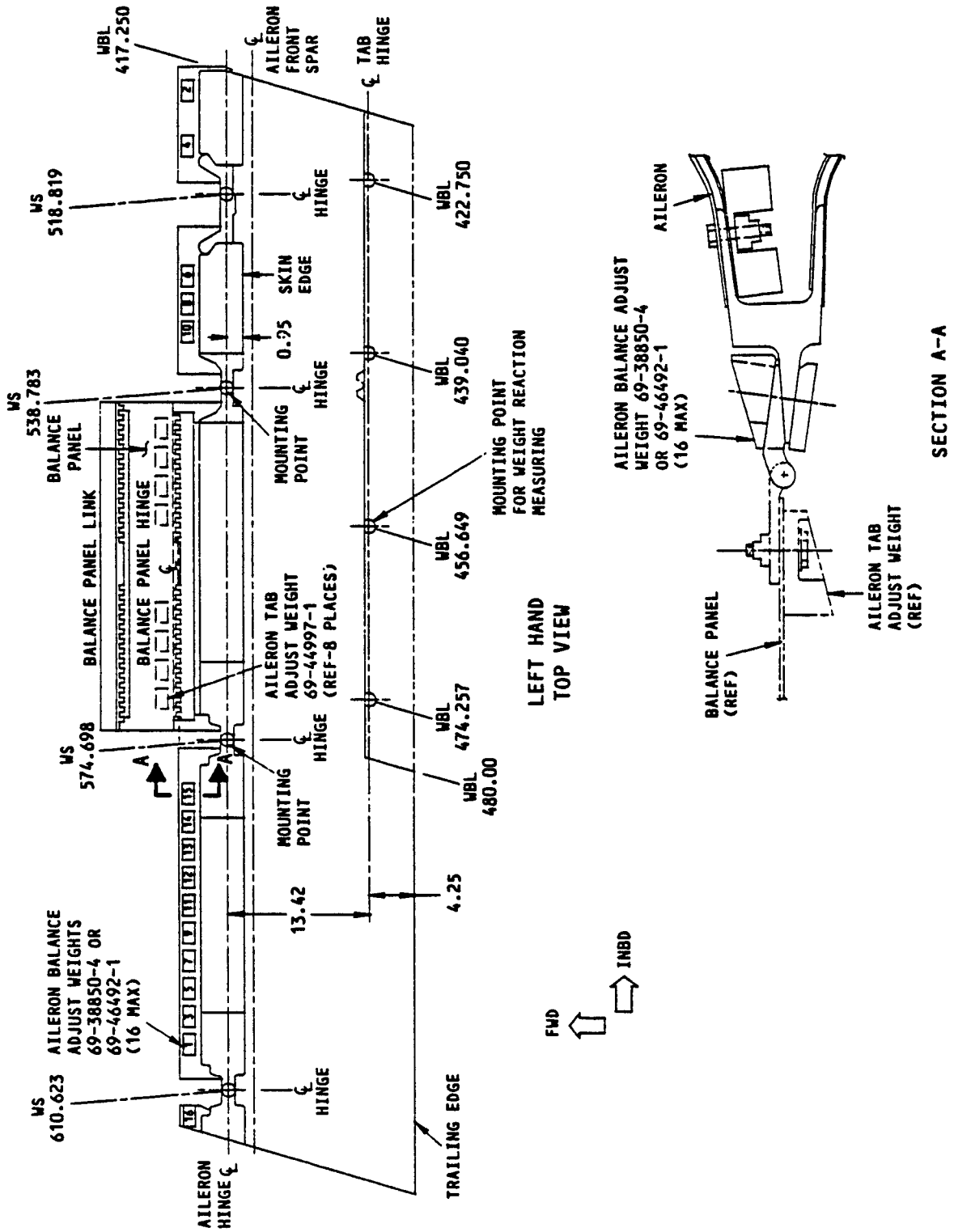

Aileron Mounting Points and Weight Location Diagram
Figure 3

204295

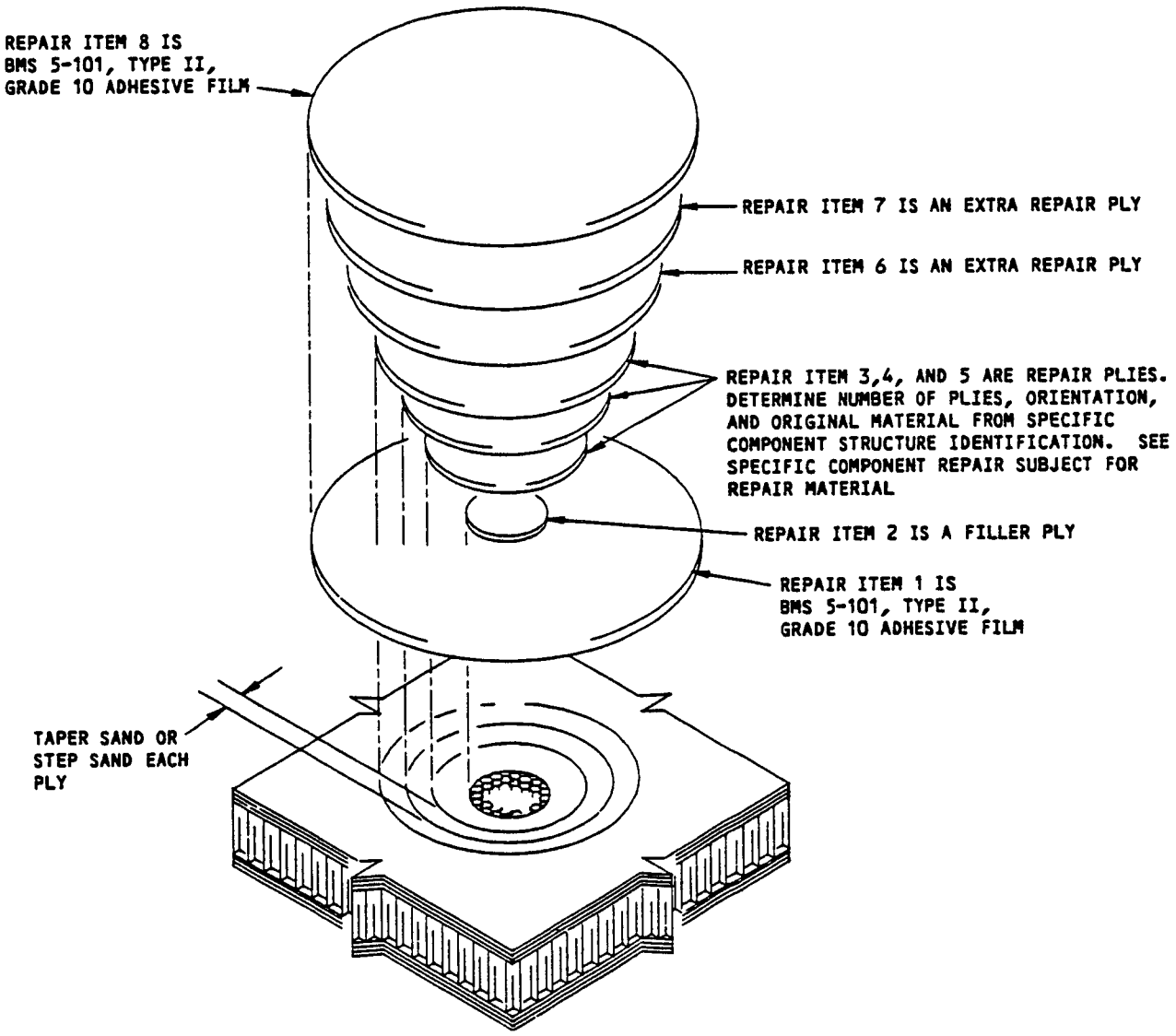

NOTES

- REPAIR ITEMS 1,2,6,7, AND 8 ARE EXTRA MATERIALS AND ADD WEIGHT TO THE REPAIR AREA ABOVE THAT WHICH WAS REMOVED AND IS BEING REPLACED
- REPAIR ITEMS 3,4, AND 5 ARE REPLACING ORIGINAL PLIES OF APPROXIMENTLY THE SAME AREA BUT OF DIFFERENT WEIGHT PER UNIT AREA

Repair (TYP) - Repair of Damage to One Skin of Honeycomb Panel
Figure 4

204303

4.B. Example 1 - No adjust weights will be required. Assume that the aileron is cracked over a 5-inch diameter area, with damage to the 3-ply graphite skin. Assume that the aileron has a recorded existing Static Balance Hinge Moment of -29.26 pound-inches. Fourteen of the 16 adjust weights have been filled during previous balancing procedures. The balance jig was used on the last rebalance.

(1) Measure the distance D (within ±0.20 inch) from the repair C.G. to the outer skin panel's forward edge (see Fig. 2). This tolerance includes a ±0.075 inch error in estimating the repair C.G. location and a ±0.125 inch error in measuring accuracy. In this example the measured distance D is equal to 6.47 inches.

(2) Determine the type of repair preferred and estimate whether or not it is possible or even desirable to complete the repair and rebalance on the airplane. For balancing purposes, in order for the aileron to remain on the airplane, the change in Check Balance Moment must remain within limits without adding weights, and rebalancing on the jig must not be required.

(3) For this example, it is estimated that adjust weights will not be required. Therefore, it is desirable to repair and rebalance the aileron on the airplane. A 250°F cure repair is chosen from 57-50-6, Fig. 1, Table I, to be completed per 51-40-13. Because the repair area involved is small (less than 15% of panel area) on this lightweight panel, and because the only bond line to be cured is on the outer face sheet, it is permissible to install a skin ply repair per 51-40-13, par. 3.A. while the aileron remains on the airplane. Since neither a heat blanket nor restraint is needed (in this case) on the far side face sheet of the panel, partial disassembly of the aileron is not required. A repair layup and bagging is needed on the near side face sheet only. (See 51-40-13, par. 2.F. and 2.G.)

(4) If the criteria of Par. 3.A. can be met then the aileron can be rebalanced without the balance jig:

(a) It is estimated that the Rework Weight will not exceed 1.5 pounds.

(b) It therefore follows that the Rework Moment will not exceed 15 pound-inches because the moment arm is less than 10 inches.

4.B.(4)(c) A determination is made that the repair can be completed, with good workmanship, to the required accuracy and tolerance specified in 51-81.

(d) For this example the repair area is circular and therefore the distance from the hinge center line to the repair C.G. was easily measurable to within ±0.20 inch.

(e) Finally, the balance jig will not be required since the above criteria have been met and there have not been two previous reworks done to this surface without rebalancing on the jig.

NOTE: If at any point during the repair or rebalancing it is determined that one or more of the criteria of par. 3.A. can not be met then the aileron must be rebalanced on the jig.

(5) Determine which repair operations will add weight and which repair operations will remove weight. The repair ply material is not equivalent to the original material as shown in 51-40-13, Fig. 6, Table I. Therefore, a Weight removed and a Weight added calculation must be made. The difference between the added and removed paint should be negligible unless paint was added beyond the boundaries of the paint removed. The materials which will add weight to the 250° repair are pictured in Fig. 4.

NOTE: For the Weight removed calculation the areas of the plies removed are considered to be equivalent to those plies replacing them. Therefore the weight change results from the weight per unit area difference. Typically for a 250° repair the replacement plies are slightly heavier than the original plies and a net weight increase results from the addition of repair ply material.

(6) Calculate the Weight added by referring to the repair shown in Fig. 4, and using the Control Surface Material Table from 51-81, Fig. 3.

NOTE: For circular plies the Weight added equals:

$$\begin{aligned} Wa &= (\text{Area of Material})(\text{Weight per unit Area}) \\ &= (\text{Area of a Circle})(\text{Weight per unit Area}) \\ &= \frac{(\pi)(\text{DIAMETER})^2}{4}\ (\text{Weight per unit Area}) \end{aligned}$$

(a) Repair item 1 - Adhesive film (10.0 inch diameter):

$$Wa1 = \frac{(\pi)(11)^2}{4}(0.00035) = +0.0333 \text{ lb.}$$

4.B.(6)(b) Repair item 2 - Filler ply, Graphite prepreg tape per BMS 8-168, Type II, Class 1, Grade 95 (5.0 inch diameter):

$$Wa2 = \frac{(\pi)(5)^2}{4}(0.00022) = +0.00432 \text{ lb.}$$

(c) Repair item 3 - Replacement ply, Graphite prepreg tape per BMS 8-168, Type II, Class 1, Grade 95 (6.0 inch diameter):

$$Wa3 = \frac{(\pi)(6)^2}{4}(0.00022) = +0.00622 \text{ lb.}$$

(d) Repair item 4 - Replacement ply, Graphite prepreg tape per BMS 8-168, Type II, Class 1, Grade 95 (7.0 inch diameter):

$$Wa4 = \frac{(\pi)(7)^2}{4}(0.00022) = +0.00847 \text{ lb.}$$

(e) Repair item 5 - Replacement ply, Graphite prepreg tape per BMS 8-168, Type II, Class 1, Grade 95 (8.0 inch diameter):

$$Wa5 = \frac{(\pi)(8)^2}{4}(0.00022) = +0.0111 \text{ lb.}$$

(f) Repair item 6 - Extra repair ply, Graphite prepreg fabric per BMS 8-168, Type II, Class 2, Style 3K-70-PW (9.0 inch diameter):

$$Wa6 = \frac{(\pi)(9)^2}{4}(0.00047) = +0.0299 \text{ lb.}$$

(g) Repair item 7 - Extra repair ply, Graphite prepreg fabric per BMS 8-168, Type II, Class 2, Style 3K-70-PW (10.0 inch diameter):

$$Wa7 = \frac{(\pi)(10)^2}{4}(0.00047) = +0.0369 \text{ lb.}$$

(h) Repair item 8 - Outer adhesive film (11.0 inch diameter):

$$Wa8 = \frac{(\pi)(11)^2}{4}(0.00035) = +0.0333 \text{ lb.}$$

4.B.(6) (i) Total Weight added (Wa):

$$\underline{Wa} = Wa1 + Wa2 + Wa3 + Wa4 + Wa5 + Wa6 + Wa7 + Wa8$$
$$\underline{Wa} = 0.0333 + 0.00432 + 0.00622 + 0.00847 + 0.0111 + 0.0299 + 0.0369 + 0.0333$$
$$\underline{Wa} = +0.1635 \text{ lb.}$$

NOTE: Rather than calculating this material weight it may be weighed on a scale with an accuracy of ±0.01 lb. as prescribed in 51-81. If possible all the repair materials should be weighed together to avoid accumulating errors.

(7) Calculate the Weight removed by referring to the repair shown in Fig. 4, and using the Control Surface Material Table from 51-60-00, Fig. 3.

(a) For innermost original ply - graphite prepreg tape per BMS 8-212, Type II, Class 1, Grade 95 (6.0 inch diameter):

$$Wr1 = \frac{(\pi)(6)^2}{4}(0.00021)$$
$$= +0.00594 \text{ lb.}$$

(b) For middle original ply - graphite prepreg tape per BMS 8-212, Type II, Class 1, Grade 95 (7.0 inch diameter):

$$Wr2 = \frac{(\pi)(70)^2}{4}(0.00021)$$
$$= +0.00808 \text{ lb.}$$

(c) For outermost original ply - graphite prepreg tape per BMS 8-212, Type II, Class 1, Grade 95 (8.0 inch diameter):

$$Wr3 = \frac{(\pi)(8)^2}{4}(0.00021)$$
$$= +0.0106 \text{ lb.}$$

(d) Total Weight removed (Wr):

$$\underline{Wr} = Wr1 + Wr2 + Wr3$$
$$= 0.00594 + 0.00808 + 0.0106$$
$$= +0.0246 \text{ lb.}$$

(8) Calculate total Rework Weight (RW):

$$\underline{RW} = Wa - Wr$$
$$= 0.1635 - 0.246$$
$$= 0.1389 \text{ lb.}$$

4.B.(9) Calculate the moment arm (Y):

The measured distance D = 6.47 inches
Therefore Y = (D)(cos 7°) + 0.95
= (6.47)(0.9925) + 0.95 = 7.37 inches

(10) Calculate Rework Moment (RM):

RM = (Rework Weight)(Y)
= (0.1389)(7.37) = +1.024 lb-in.

(11) Calculate trial CBM:

trial CBM = SBHM + Rework Moment
= -29.26 + 1.024 = -28.24 lb-in.

(12) Determine whether or not trial CBM is within permissible range. From Fig. 1 Table 1 this trial Check Balance Moment of -28.24 lb-in. is within permissible range after a first rework; therefore, no adjustment is required.

NOTE: The CBM can be brought into the preferred range by the addition of adjust weights but this is not required.

(13) Redesignate trial Check Balance Moment - Once within acceptable limits the trial CBM becomes the new Static Balance Hinge Moment. This new moment value of -28.24 lb-in. is stamped on the nameplate. Record the fact that the aileron has been repaired once without the balance jig or weight addition. The type of repair (a 250° repair to skin on one side) is also recorded along with the repairs location on the surface and the date.

C. Example 2 - Adjust weights will be required. Assume that a large repair to one side of the skin and to the core is needed on the same aileron as in Example 1. The current Static Balance Hinge Moment (SBHM) = -28.24 lb-in.

(1) It is estimated that the criteria of Par. 3.A. and 51-81 can be met. The aileron can therefore be rebalanced without the balance jig.

(2) Refer to 57-50-6, Fig. 1, Table I for approved repairs to aileron skin panels. A 350° repair is made in accordance with 51-40-14.

4.C.(3) Determine which repair operations will add weight and which repair operations will remove weight. For this example the replacement repair plies and core plug are the same as the original material per 51-40-14, Fig. 6, Table I, and par. 2D. Therefore the weight of the replacement core should be equivalent to the removed core, and the weight of replacement plies should be equivalent to the corresponding removed plies. These values cancel from the calculation, and the weight removed becomes zero. The difference between the added and removed paint should also be negligible unless paint was added beyond the boundaries of the paint removed. Therefore the effective Weight added comes from the extra repair material such as the foaming adhesive, potting compound, adhesive films, filler ply, and the extra repair ply.

(4) Make the necessary measurements and calculations. The following values are found:

Distance = D = 10.7 inches

Weight removed = Wr = 0 (See par. 4.C.(3) for explanation.)

Weight added = Wa = 0.32 lb. (See par. 4.C.(3) for explanation.)

(5) Calculate the trial Check Balance Moment using the method of par. 3.B.:

Y = (D)(0.9925) + 0.65 = (10.7)(0.9925) + 0.95 = +1.57 in.

Rework Weight = RW = Wa - Wr = 0.32 - 0 = +0.32 lb.

Rework Moment = RM = (RW)(Y) = (0.32)(11.57) = +3.7 lb-in.

trial CBM = SBHM + RM = -28.24 + 3.7 = -24.54 lb-in.

(6) Refer to Fig. 1, Table I. The allowable range after a second rework is -33.0 lb-in. thru -25.0 lb-in. A trial Check Balance Moment of -24.54 lb-in. does not fall within this range and therefore the aileron must be rebalanced.

(7) Determine the number of weights required by referring to Fig. 1, Tables I and II and following the steps of par. 3.B.(4).

(a) Choose a desired CBM. A desired CBM of -32.0 lb-in. is chosen from the preferred range. This value could have been selected anywhere in the permissible range but for illustrative purposes a preferred value is chosen.

4.C.(7)(b) Refer to the row in Table II in which a desired Check Balance Moment of -32.0 lb-in. lies. For example it is the 3rd row from the top. Follow this row to the right until reaching a * in the 8th column from the right. This is the effective column from which the number of required adjust weights will be read.

(c) Refer to the row in Table II in which the calculated trial CBM of -24.54 lb-in. lies. For this example it is in the 9th row from the top.

(d) Follow the row of the trial CBM to the right until reaching the effective column of par. (b). The corresponding number "6" is the number of adjust weights (N) required to move the trial CBM into the desired CBM range.

(e) Determine the number of aileron balance adjust weight spaces available, add weights and calculate the new SBHM. It is determined from the information given in example 1 that there are only 2 spaces available. Therefore, 2 adjust weights are added and the new Static Balance Hinge Moment is calculated using N = 2 rather than N = 6.

new SBHM = (-N)(1.45) + trail CBM = _____ lb-in.

= (-2)(1.45) + (-24.54) = -27.44 lb-in.

NOTE: The number 1.45 in the above equation comes from the multiplication of the weight of each adjust weight times its moment arm: (0.296)(4.9) = 1.45.

(f) Determine whether or not the new SBHM is within permissible range by referring to Fig. 1, Table I. The new SBHM value of -27.44 is within permissible limits and once the weights are put in place this value is stamped on the nameplate as the new Static Balance Hinge Moment. Also recorded is the fact that this is the second repair without rebalancing on the jig, along with the repair type, location, date, and the number of spaces available for weight addition, which in this example is zero.

NOTE: If the new SBHM had not fallen within the permissible range per Fig. 1, Table I, a rebalancing operation using the balancing jig would have been required.

5. Balancing Procedures with Aileron on the Balance Jig

A. After the rework is complete mount the aileron (top surface up) on a balance jig stand and static balance fittings similar to illustration in Fig. 5. See Fig. 3 for mounting point locations. When mounted as shown in Fig. 5 the aileron must be free to rotate a few degrees about the support fittings without binding. See Fig. 6 for the condition of the aileron for balancing.

B. With the chord plane horizontal, measure the Weight Reaction (WR) at the weight reaction mounting point (see Fig. 2). The weight reaction mounting point is located on the tab hinge centerline, a dimension B aft of the aileron hinge centerline. The dimension B is equal to 13.42 inches.

NOTE: The Weight Reaction (WR) is the scale reading taken at the mounting point for weight reaction measuring shown in Fig. 3. The Weight Reaction (WR) is not equivalent to the Rework Weight (RW).

C. Obtain a trial Check Balance Moment by multiplying the Weight Reaction (WR) in pounds by the moment arm (B) given in Fig. 2 in inches:

trial Check Balance Moment = (WR)(B)

NOTE: Observe the proper sign conventions listed in 51-81, par. 7.

D. Determine the number of adjust weights (N) required by using the Aileron Balance Table (Fig. 1, Table II). Follow the procedure given in par. 3.B.(4) for using Table II.

E. Install these weights as shown in the numbered positions in Fig. 3.

NOTE: Aileron balance adjust weights must be distributed uniformly over the length of the aileron. For example, if 9 weights are required, locate in positions 1 through 9.

F. Obtain a second trial Check Balance Moment. Trial CBM = (WR)(B). This moment must lie within the limits specified in Table I. If the moment is not within limits then balance weights must be added or removed until the required moment is obtained. If there are not enough weight positions to bring the moment back into range then the aileron must be replaced, unless removing multiple paint layers and repainting brings the aileron back into acceptable balance condition.

5.G. Redesignate the trial CBM. Once in the correct range the trial Check Balance Moment becomes the new Static Balance Hinge Moment. Stamp this value on the nameplate. Record the fact that the surface has been rebalanced on the jig. Also record the repair type, location, date, and the number of spaces available for weight addition.

H. Example 3 - Rebalancing an aileron on the balance jig. Assume that a new aileron is damaged and the decision is made to remove the aileron for repair and rebalancing. Six of 16 aileron balance adjust weight positions have been used leaving 10 for weight addition.

(1) Mount the aileron on the static balance jig and determine the Weight Reaction (WR) and moment arm. For this example the Weight Reaction of the aileron at the weight reaction point is upward and therefore negative. The moment arm (B) has a constant value from Fig. 3 and is aft of the hinge line and therefore positive.

(a) Measure the Weight Reaction:
WR = -1.20 lb

(b) Determine the value of constant dimension B from Fig. 3:
B = +13.42 in.

(2) Determine trial Check Balance Moment.
trial CBM = (WR)(B)
= (-1.20)(13.42) = -16.10 lb-in.

(3) Determine whether or not the aileron must be rebalanced. This trial CBM of -16.10 lb-in. does not fall within allowable range of Fig. 1, Table I under the "permissible range after rebalance on the balance jig." The aileron must therefore be rebalanced.

NOTE: If the aileron is being rebalanced on the balance jig then the number of reworks is not significant with respect to Table I.

(4) Select a desired Check Balance Moment range. Referring to Fig. 1, Table II a desired CBM range of -30.44 to -29.00 is selected. This range is located on the 5th row from the top left column. Follow this row to the right until reaching a * located in the 6th column from the right. This will be referred to as the effective column.

5.H.(5) Determine the number of additional aileron balance adjust weights required by referring to the effective column entry that is in the same row as the trial Check Balance Moment range. The trial CBM value of -16.10 lb-in. falls in the range of -17.39 thru -15.95 shown in the eighth row from the bottom of Fig. 1, Table II. Follow this row to the right until the effective column is reached. The table entry at the intersection of this row and the effective column is "9". Therefore nine additional adjust weights are required. There are ten spaces available, so all nine weights will be added.

(6) Add nine additional 69-46492-1 or 69-38850-4 weights per Fig. 2 and 3.

(7) Obtain a second trial CBM.

(a) Measure the Weight Reaction:

$$WR = -2.18 \text{ lb}$$

(b) Determine the value of constant dimension B from Fig. 3:

$$B = +13.42 \text{ in.}$$

(c) Calculate trial CBM:

$$\begin{aligned} \text{trial CBM} &= (WR)(B) \\ &= (-2.18)(+13.42) \\ &= -29.26 \text{ lb-in.} \end{aligned}$$

(8) Determine whether or not the 2nd trial CBM is within acceptable range per Fig. 1, Table I. This trial CBM of -29.26 lb-in. is within the allowable limits of Table I for rebalancing on the balance jig. Once meeting the criteria of Table I this trial CBM becomes the new Static Balance Hinge Moment. This value is stamped on the nameplate. The fact that the aileron has been repaired off the airplane and rebalanced on the balance jig is also recorded along with the repair type, location, date and the number of spaces available for weight addition. In this example there is one space available after rebalancing.

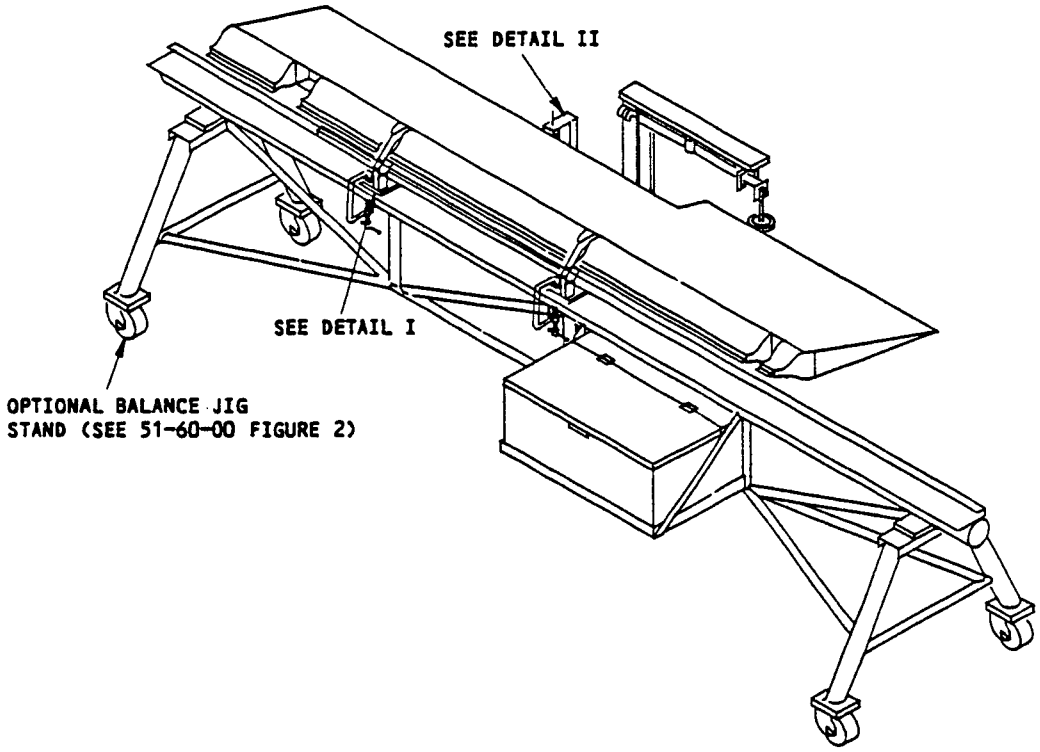

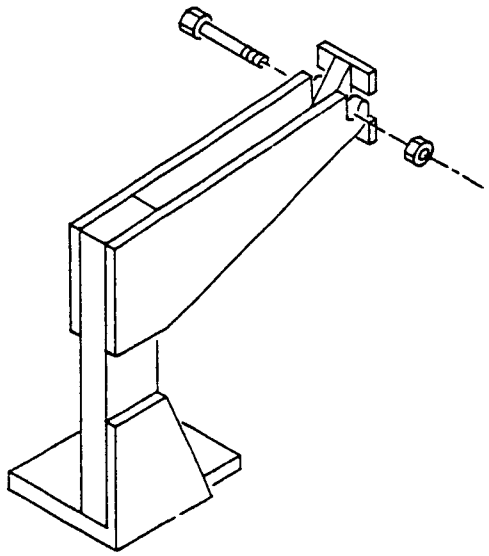

FWD HINGE SUPPORT
DETAIL I

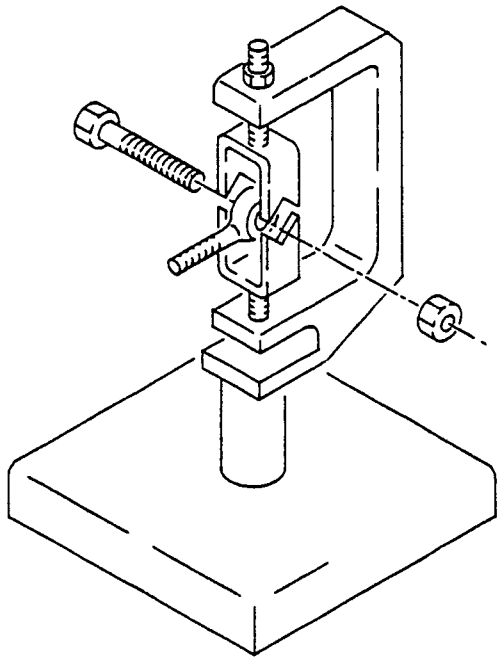

AFT HINGE SUPPORT
DETAIL II

Aileron Support During Balancing
Figure 5

204296

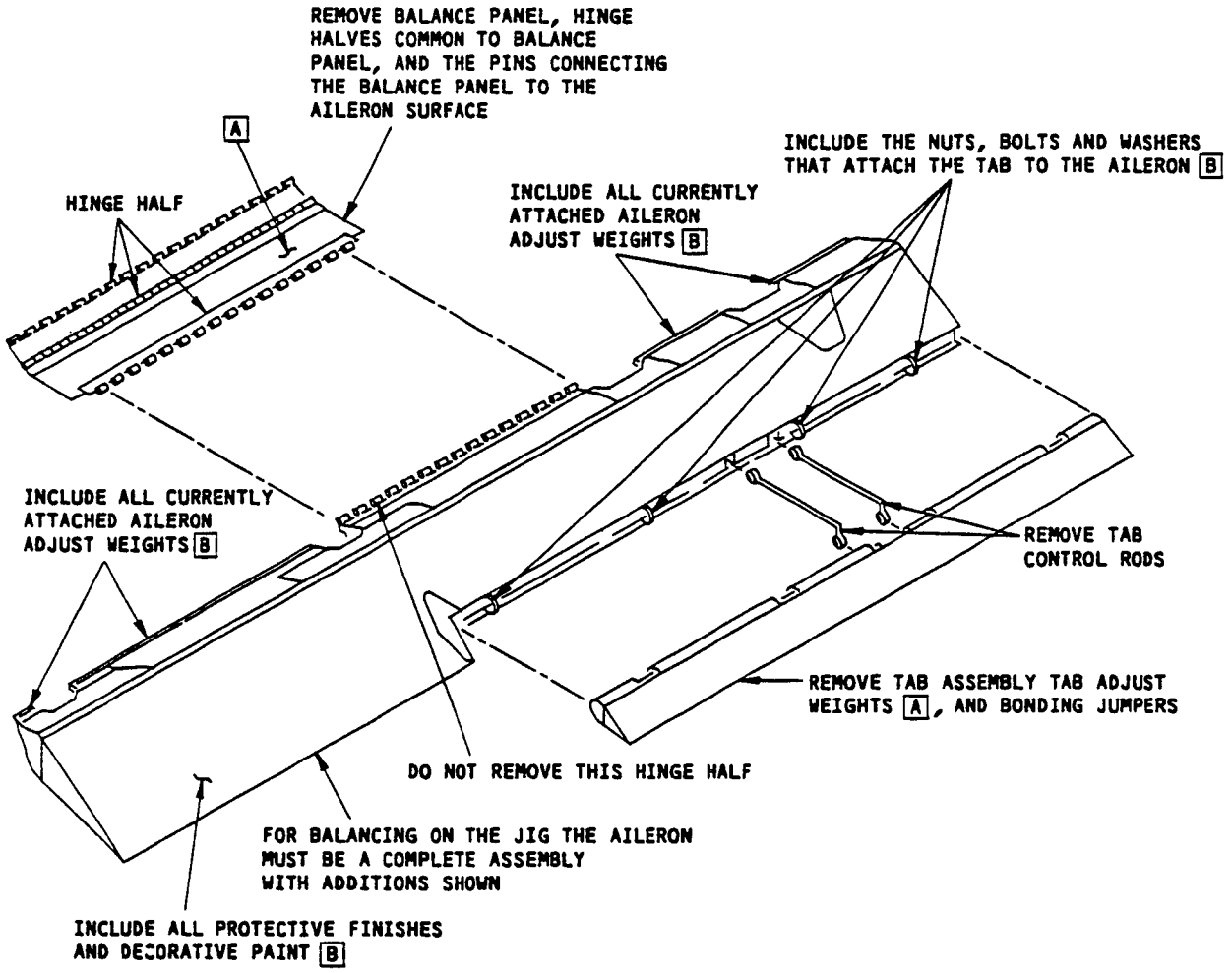

NOTES

A TAB ADJUST WEIGHTS ARE LOCATED ON THE LOWER SURFACE OF THE BALANCE PANEL

B THESE PARTS ARE INCLUDED IN ADDITION TO THOSE OF THE AILERON ASSEMBLY

Configuration of Aileron at Time of Balancing on the Balance Jig
Figure 6

204305

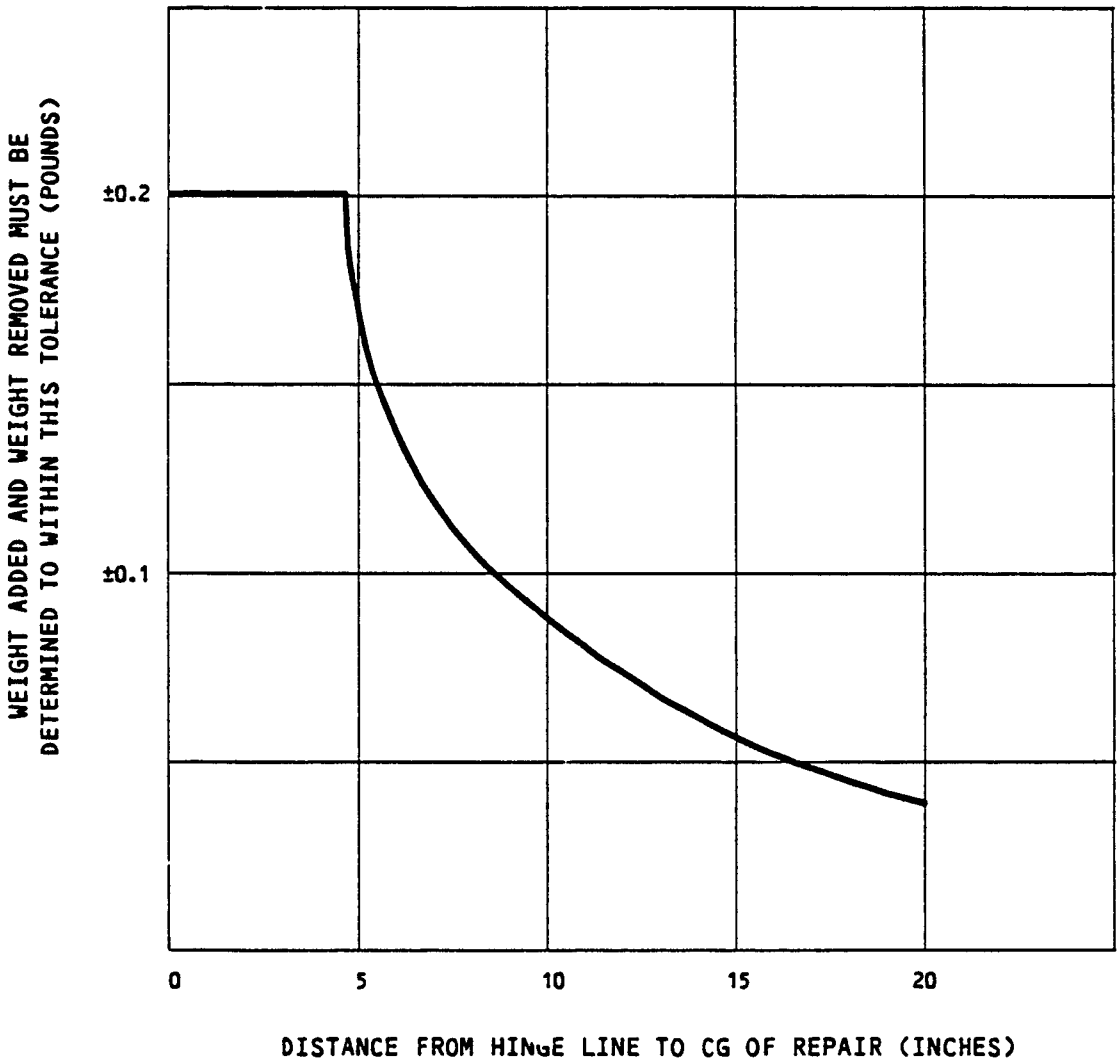

Weight Tolerance Requirements for Balancing Aileron on Airplane
Figure 7

204297

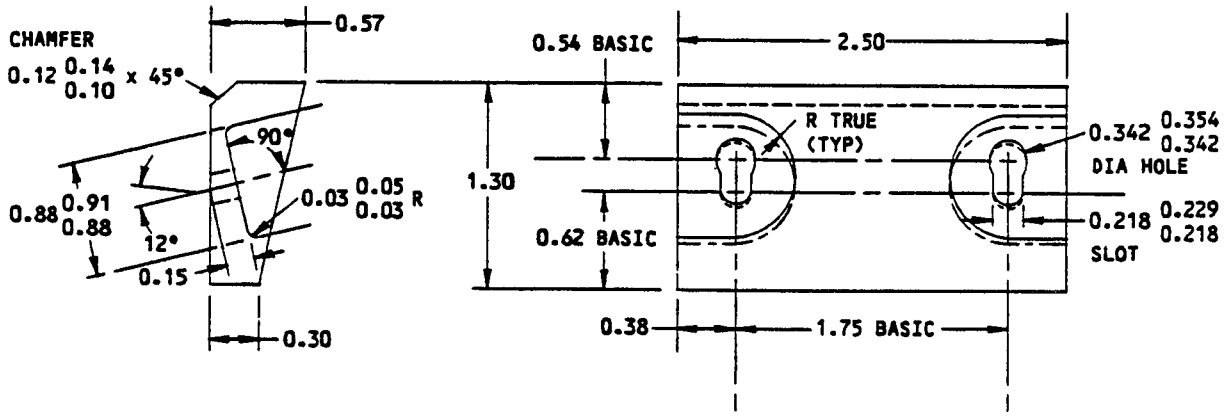

NOTES

- PART NO. 69-38850-4
- 69-39950-4 AND 69-46492-1 (CAST WEIGHT) ARE EQUAL IN WEIGHT
- 4130 STEEL ANNEALED CADMIUM PLATE TO MEET REQUIREMENTS OF QQ-P-416 TYPE II CLASS 2 FOLLOWED BY TWO COATS BMS 10-11 PRIMER
- CONTROLLED WEIGHT 0.296 POUND; 0.24 POUND MINIMUM, 0.31 POUND MAXIMUM

Aileron Balance Adjust Weights
Figure 8

204306

WEIGHT CONTROL PROCEDURE FOR BALANCE PANEL ON GRAPHITE COMPOSITE AILERON

WARNING: USE 51-81-2 FOR GRAPHITE COMPOSITE AILERON BALANCE PANEL PROCEDURES. USE 51-80-2 FOR GLASS FABRIC/METAL AILERON BALANCE PANEL PROCEDURES. FAILURE TO COMPLY CAN PRODUCE UNDESIRABLE FLUTTER AND DYNAMIC INSTABILITY WHICH COULD AFFECT FLIGHT SAFETY.

1. Weight Requirements

   A. The aileron balance panel (65-46457) is not balanced, but its weight affects the balance of the aileron; consequently, the weight of the panel is limited to 3.94 (±0.12) pounds.

   B. For configuration of the aileron balance panel at time of weighing, see Fig. 1.

   C. Prior to weighing the panel, a check must be made to be certain that the tab adjust weights are not installed.

   D. Where repairs would result in the panel weight being in excess of the maximum permitted in Par. 1.A. above, the panel must be replaced with one of the correct weight.

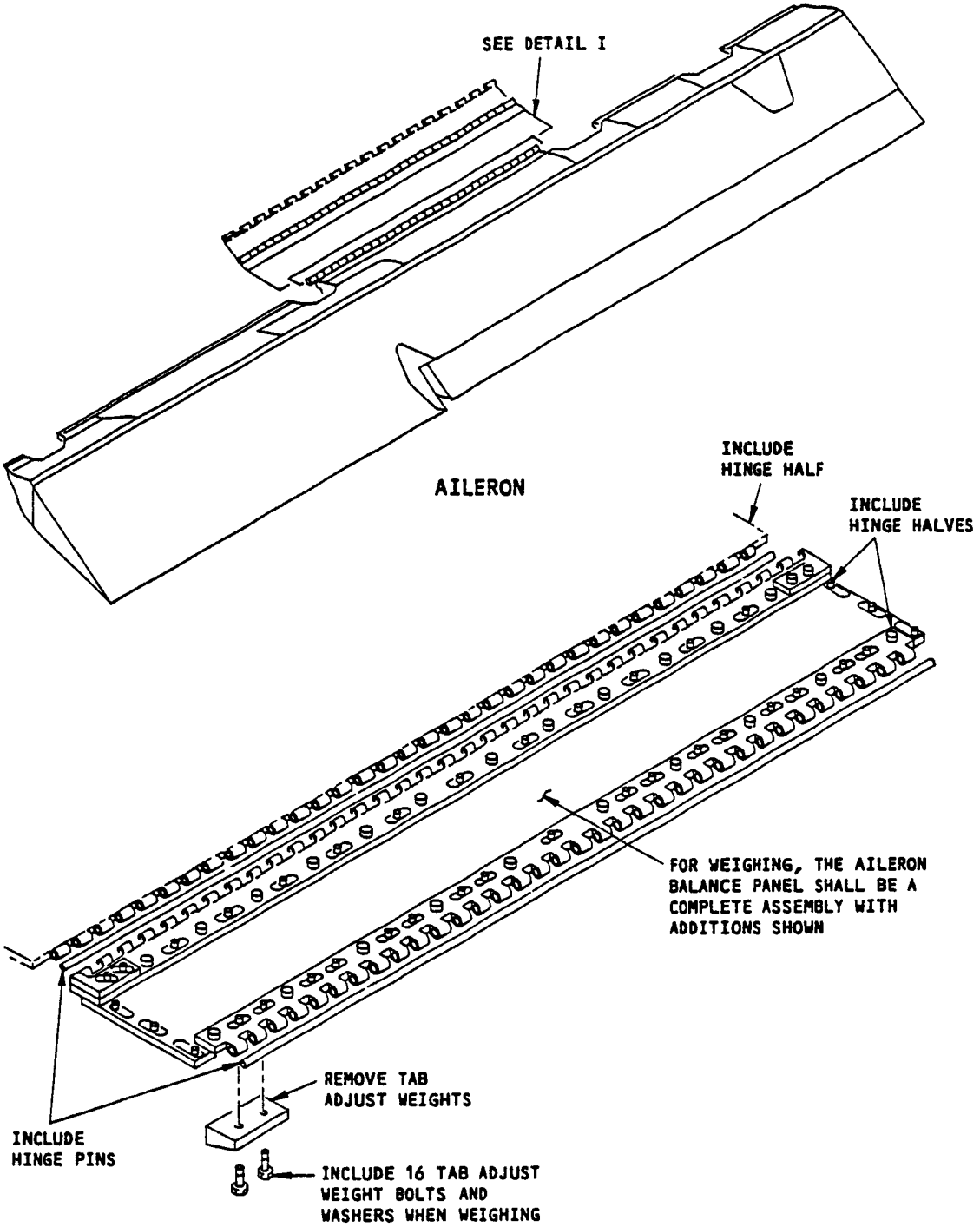

Aileron Balance Panel As-Weighed Condition
Figure 1

204307

BALANCE PROCEDURE FOR TAB ON GRAPHITE COMPOSITE AILERON

Refer to 51-80-3 for the adjustment of aileron balance for change in tab weight.

GRAPHITE COMPOSITE ELEVATOR BALANCE PROCEDURE

WARNING: USE 51-81-4 FOR GRAPHITE COMPOSITE ELEVATOR BALANCING. USE 51-80-4 FOR GLASS FABRIC/METAL ELEVATOR BALANCING. FAILURE TO COMPLY CAN PRODUCE UNDESIRABLE FLUTTER AND DYNAMIC INSTABILITY WHICH COULD AFFECT FLIGHT SAFETY.

1. Elevator Balance Requirements - General

NOTE: For definition of terms and general control surface balancing procedures see 51-81.

A. This section presents the operational (in-service) balance requirements and rebalancing procedure for the elevator after a rework operation (repair or repaint). For elevator balance panel procedures see 51-81-5 and for elevator tab procedures see 51-81-6.

B. The elevator must be balanced so that the Check Balance Moment (CBM) lies within the limits given in Table I, Fig. 1. These limits vary with the number of times the elevator has been reworked and rebalanced without the balance jig, so care must be taken to ensure that the correct figures are used.

C. If the trial Check Balance Moment of the reworked elevator falls outside of the values specified in Table I of Fig. 1, then the elevator's balance must be adjusted. The number of elevator balance adjust weights required may be determined per par. 3 or par. 4.

D. All rework moments must be recorded, even if rebalancing is not required, and must be taken into account when a further repair or repainting is carried out. Record each occasion when the elevator has been repaired or repainted and specify whether or not it was rebalanced on the jig. The repair type, location, date, and the number of weights and their Bay positions should also be included.

1. E. The elevator may be rebalanced by one of two methods.

   (1) The calculation procedure. This procedure does not require the use of the balance jig. The calculation procedure may be used with the elevator on or off the airplane as long as all the repair and balancing criteria are met. See Fig. 1 for Rebalancing a Reworked Elevator Without the Balance Jig. Care must be taken that the necessary date is recorded during the rework so that the calculations can be made accurately.

   (2) The balance jig procedure. For configuration of the elevator at time of balancing on the balance jig, see Fig. 5. The elevator must be removed from the airplane to rebalance it on the balance jig. See Fig. 2 for Rebalancing a Reworked Elevator on the Balance Jig.

   F. Removing lower trailing edge access panels permits addition of adjust weight to the lower surface only of the elevator nose fork on the tower ribs. Due to the configuration of the elevator, adding adjust weights to the upper surface of the nose fork is not possible without removing the elevator.

   G. For Removal/Installation of the Elevator refer to 27-31 of the 737 Maintenance Manual.

   H. Once the elevator has been removed it is preferred (but not required) that it be rebalanced on the balance jig. Whenever balance weights are added to an elevator which has been removed the weights should always be added to the upper surface of the balance bays first. This allows weights to be added later to the lower surface without removing the elevator (see Fig. 4, Section A-A and B-B).

2. Rework Operations That Do Not Require Rebalancing

   A. Elevators of known balance condition which remain within the limits specified in Fig. 1, Table I after the rework moment (RM) has been added or subtracted, do not require balance adjustment (see Fig. 1 for calculation procedure).

   B. Elevators that remain within the limits specified in Table I of Fig. 2 after the Weight Reaction (WR) has been measured and the corresponding trial Check Balance Moment (CBM) has been calculated, do not require balance adjustment (see Fig. 2 for the procedure).

3. Rebalancing a Reworked Elevator Without the Balance Jig

A. Provided that there is space for the addition of the required adjust weights, an elevator may be rebalanced without the balance jig if the following criteria can be met. See Fig. 1 for OFF-THE-JIG REBALANCING INSTRUCTIONS.

(1) The Rework Weight (RW) of the repair or repaint (weight added minus weight removed) does not exceed 3 pounds (as calculated in Fig. 1).

(2) The Rework Moment (RM) of the repair or repaint about the hinge line does not exceed 40 pound-inches (as calculated in Fig. 1).

(3) The weight of material removed (or lost due to damage) and the weight of material added must be determined within the tolerance specified in Fig. 7. This tolerance must account for the tolerance of the weighing equipment, inaccuracy of estimation of weight of material removed, and the inaccuracy in determining the weight of repair materials or paint. See 51-81 for the degree of accuracy that can be achieved with careful workmanship.

(4) The distance from the hinge line to the center of gravity (C.G.) of the rework must be determined to within ± 0.2 inch. This tolerance must include any possible error in estimating the position of the C.G. and in measuring the distance to the hinge line due to accuracy of equipment.

(5) Not more than two consecutive repairs or repaintings or combination may be carried out without rebalancing of the elevator on the balance jig. A third repair or repainting necessitates rebalancing in accordance with Fig. 2, on the balance jig.

NOTE: Repainting the entire elevator in accordance with the instructions in 51-81 Par. 4 will meet the conditions of the above criteria.

4. Rebalancing a Reworked Elevator On the Balance Jig

A. To rebalance the elevator on the balance jig see Fig. 2 for ON-THE-JIG REBALANCING INSTRUCTIONS.

5. Sample Calculations - Rebalancing and Elevator Without the Balance Jig

A. The following examples demonstrate the type of procedures to be used when calculating the Rework Moment (RM) to determine the Check Balance Moment (CBM) otherwise known as the Static Balance Hinge Moment (SBHM) when within allowable limits. Two examples are given, one case which does not require rebalance and one which requires rebalance with adjust weights. Follow the logic of Fig. 2 when going through these examples.

B. Example 1 - No adjust weights will be required. Assume that the elevator 65C25746-1 has been gouged and dented over a 5-inch diameter area at elevator station 140 thru 145, with damage to the outer 3-ply graphite skin and to the 0.4 inch thick core. The current Static Balance Hinge Moment (SBHM) stamped on the nameplate is +118.06 pound-inches. All six of the adjust weight positions in Bay 2 have been filled, but Bay 3 and Bay 4 are empty. The balance jig was used on the last rebalance making this the first rebalance without the jig (assuming that applicable criteria can be met for rebalancing without the jig). The operator would like to install and cure the repair, and rebalance the elevator with it on the airplane if possible. Proceed with the repair and rebalancing as follows.

(1) Refer to Fig. 1, "Off-the-Jig Rebalancing Instructions" while proceeding thru this example.

(2) Because this is not the third rework since the last rebalancing on the balance jig, the jig is not required.

(3) Referring to the elevator skin repair section 55-20-3, Fig. 201, Table I, a 250° cure repair per 51-40-13, par 3.C. is selected. For this example, the operator decides that it is desirable to repair and rebalance the elevator on the airplane. Because the repair area on this light weight panel is not large (less than 15% of panel area), the entire panel including the inside surface need not be vacuum bagged and restrained in place per 51-40-13, par. 2.F. If the replacement core plug is cured separately, prior to the skin, with thermocouples under the core to monitor the far side face sheets temperature, then a heat blanket need not be positioned on the far side face sheet. For these reasons, the elevator need not be disassembled to facilitate skin panel repair and the elevator may remain on the airplane from a repair stand point.

5. B. (4) Refer to Fig. 1, OFF-THE-JIG REBALANCING INSTRUCTIONS step 1 and calculate the trial CBM. Proceed with measurements and calculations to determine the trial Check Balance Moment before, during, and after the rework is complete.

(a) Measure distance D (see Fig. 6):

D = +8.05 inches

(b) Calculate Y (see Fig. 6):

The repair C.G. is at elev sta 142.5 therefore
Y = (D)(Cos 7°) + 1.3
= (+8.05)(0.9925) + 1.3
≐ +9.29 inches

(c) Determine which repair operations will add weight and which repair operations will remove weight. In this example, the repair core material is the same weight per unit volume as the original material. The weight of the 5-inch diameter repair core will be approximately equivalent to the removed core. The weight of repair ply material is not equivalent to the original material weight as shown in 51-40-13, Fig. 6, Table 1. Therefore, a Weight removed and a Weight added calculation must be made. The difference between the added and removed paint should be negligible unless paint was added beyond the boundaries of the paint removed. The materials which will add weight to the 250° repair are pictured in Fig. 9.

NOTE: For the Weight removed calculation the areas of the plies removed are considered to be equivalent to those plies replacing them. Therefore the weight change results from the weight per unit area difference. Typically for a 250° repair the replacement plies are slightly heavier than the original plies and a weight increase results from the addition of repair ply material.

(d) Calculate the Weight added (Wa) by referring to the repair shown in Fig. 9 and using the Control Surface Material Table from 51-81, Fig. 3. An example of this type of ply by ply weight calculation is given in Example 1 in 51-81, par. 4.B.

Wa = +0.1876 lb

NOTE: Rather than calculating this material weight it may be weighed on a scale with an accuracy of ± 0.91 lb as prescribed in 51-81. If possible all the repair materials should be weighed together to avoid accumulating errors.

5. B. (4) (e) Calculate the Weight removed (Wr) by referring to the repair shown in Fig. 9 and using the Control Surface Material Table from 51-81, Fig. 3. An example of this type of ply by ply weight calculation is given in Example 1 in 51-81, par. 4.B.

Wr = 0.0246 lb

(f) Calculate total Rework Weight (RW):

RW = Wa - Wr
= 0.1876 - 0.0246
= 0.1630 lb

(g) Calculate Rework Moment (RM):

RM = (Rework Weight)(Y)
= (0.1630)(9.29) = +1.514 lb-in

(h) Calculate trial CBM:

trail CBM = SBHM + Rework Moment
= 118.06 + 1.514 = 119.57 lb-in

(5) By referring to par. 3.A it is determined in Fig. 1, step 2 that the criteria for rebalancing without the balance jig are satisfied; therefore, the elevator need not be rebalanced on the jig.

(6) Fig. 1, step 3.
Determine whether or not the trial CBM is within permissible range. From Fig. 1, Table 1 this trial Check Balance Moment of +119.57 lb-in. is within permissible range after a first rework; therefore, no adjustment is required. Go to step 6 in Fig. 1.

(7) Fig. 1, step 6, and step 7.
The new SBHM = trial CBM. The new Static Balance Hinge Moment therefore equals +119.57 lb-in. This new SBHM is stamped on the nameplate of the control surface. The airplane's elevator records should also show the following information:

(a) The current SBHM = +119.57 lb-in.

(b) Date of rework.

5. B. (7) (c) Type of rework; a circular 250°F cure repair to all the outer skin plies and a full depth 5.0 inch diameter core replacement. The core was cured separately from the skin so that access to the panel's inner surface would not be necessary. Thermocouples were inserted beneath the core to ensure proper curing temperatures. The final outer adhesive film sheet has a diameter of 11 inches.

(d) Location of repair C.G.; +8.05 inches aft of the upper skin panel's forward fastener centerline at elevator station 142.5.

(e) The elevator did not require the addition of weights since it remained within allowable balance moment range after adding the rework moment.

(f) Spaces remaining for weight addition; all six upper spaces are filled in Bay 2, leaving twelve total in Bay 3 and four total in Bay 4 available for weight addition.

(g) The balance jig was not used to rebalance the elevator. This was the first rework since the balance jig was last used.

C. Example 2 - adjust weights will be required. Assume that a large repair is needed on elevator 65C25746-1 centered at elevator station 60. The current Static Balance Hinge Moment (SBHM) stamped on the nameplate is +119.57 lb-in. The elevator has been reworked several times before, but it has only been reworked once since the last rebalance on the balance jig, making this the second rebalancing without the jig (assuming that applicable criteria can be met for rebalancing without the jig). All six of the spaces in Bay 2 have been filled with adjust weights. There is plenty of time before the next flight, and the operator would like to install the repair, cure the repair, and rebalance the elevator while it is still on the airplane. Proceed with the repair and rebalancing as follows.

(1) Refer to Fig. 1. Follow the instructions in this figure when reading this example.

(2) Because this is only the second rework since the last rebalancing on the balance jig and not the third, the jig is not required.

(3) It would be desirable to repair and rebalance the elevator on the airplane. A 350°F cure repair per 51-40-14, par. 3.C, as authorized in 55-20-03, Fig. 1, Table I, is chosen. Because the repair area involved is large (greater than 15% of panel area), the entire panel must be vacuum bagged and restrained in place per 51-40-14, par. 2F.

5. C. (4) Since the replacement core plug is being cured at the same time as the repair plies, the far side face sheet temperature must be monitored with thermocouples and a heat blanket must be positioned on the far side face sheet per 51-40-14, par. 2.F. For these reasons, the elevator must be partially disassembled. To facilitate skin panel removal, the elevator is removed from the airplane; thus, it is not permissible to perform this repair on the airplane. It is permissible to rebalance the elevator on the airplane after the repair is installed, provided all relevant balancing criteria are met. However, since the elevator is now off the airplane for repair, it is decided to rebalance the elevator off the airplane after the repaired elevator is reassembled. Once the repair is installed and cured, it will be reassembled per engineering drawings.

(5) Once removed from the airplane it is preferred that the elevator be rebalanced on the balance jig, but not required. Say, for this example, that a jig is not available and the decision is made to rebalance the elevator by calculation. If the criteria of par. 3.A can be met then the elevator can be validly rebalanced without the jig.

(6) Refer to Fig. 1, OFF-THE-JIG REBALANCING INSTRUCTIONS step 1 and calculate the trial CBM. Proceed with measurements and calculations to determine the trial Check Balance Moment before, during, and after the rework is complete.

(a) Measure distance D (see Fig. 6):

D = +17.1 inches

(b) Calculate distance Y (see Fig. 6):

The repair C.G. is at elev sta 50 therefore:

$$Y = D\ (\cos 7°) + 1.3$$
$$= (+17.1)(0.9925) + 1.3$$
$$= +18.27 \text{ lb-in.}$$

5. C. 6. (c) Determine which repair operations will add weight and which repair operations will remove weight. In this example, the replacement repair material is the same as the original material per 51-40-14, Fig. 6, Table I. Therefore, the weight of the replacement core should be equivalent to the removed core, and the weight of replacement plies should be equivalent to the corresponding removed plies. These values cancel from the calculation and the Weight removed becomes zero. The difference between the added and removed paint should also be negligible unless paint was added beyond the boundaries of the paint removed. Therefore the effective Weight added comes from the extra repair material like the foaming adhesive and the adhesive films and the filler ply and the extra repair plies.

(d) Determine Weight added (Wa) using a method similar to Example 1 in 51-81-1, par. 4.B.

Wa = +1.68 lb

(e) Calculate Rework Weight (RW):

RW = Wa - Wr
= +1.68 - 0
= +1.68 lb

(f) Calculate the Rework Moment (RM):

RM = (RW)(Y)
= (+1.68)(+18.27)
= +30.69 lb-in

(g) Calculate trial Check Balance Moment (trial CBM):

trial CBM = SBHM + RM
= +119.57 + 30.69
= +150.26

(7) By referring to par. 3.A it is determined in Fig. 1, step 2 that the criteria for rebalancing without the balance jig are satisfied.

(8) Fig. 1, step 3. Determine whether or not the trial CBM is within allowable range. Refer to Fig. 1, Table I. The permissible range after a second rework is +85.0 lb-in. thru +115 lb-in. A trial CBM of +150.26 lb-in. does not fall within this range and therefore, the elevator must be rebalanced.

5. C. (9) Airplane records show that there is space available for adjust weight addition. In this case, since the elevator is off the airplane, this fact could be determined by visual observation.

(10) From Fig. 1, general notes, examine the weight space locations using the RULES OF WEIGHT ADDITION. All six of the adjust weight spaces in Bay 2 are filled. The upper and lower surfaces of Bay 3 and Bay 4 are empty so weights will be added in those bays first.

(11) Fig. 1, steps 4 and 5. To rebalance the elevator the trial CBM of +170.26 lb-in. must be reduced until it is within allowable limits. To reduce the trial CBM add weights to the upper surface of Bay 3. The upper surface of Bay 3 can hold six weights and M2 from Table III for six weights equals -49.8 lb-in.

new trial CBM = trial CBM + ΔM1 + ΔM2 + ΔM3 + ΔM4 + ΔM5
= 150.26 + 0 + (-49.8) + 0 + 0 + 0
= 100.46 lb-in.

(12) This new trial CBM value of +100.46 lb-in. falls within the permissible range after a second repair, so it could be considered the new SBHM per Fig. 1, step 6. However, it is possible to move the elevator's moment into the preferred range by adding still more weights.

(13) There are no more spaces located in the upper surface of Bay 3 weights will be added to the upper surface of Bay 4 next.

(14) The preferred range after a second rework without the balance jig is 85.0 lb-in. thru +100 lb-in. To reduce the new trial CBM into the preferred range add weights to the upper surface of Bay 4. The upper surface of Bay 4 can hold two weights and ΔM3 from Table IV for two weights equals -14 lb-in.:

new trial CBM = trial CBM + ΔM1 + ΔM2 + ΔM3 + ΔM4 + ΔM5
= +150.26 + 0 + (-49.8) + (-14) + 0 + 0
= +86.46 lb-in.

(15) This latest value of the new trial CBM falls within the preferred range of Fig. 1, Table I and therefore becomes the new Static Balance Hinge Moment (new SBHM) per Fig. 1, step 6:

new SBHM = new trial CBM = +86.46 lb-in.

5. C. (16) Fig. 1, step 7. This new SBHM is stamped on the nameplate of the control surface. The airplane's elevator records should also show the following information:

(a) The current SBHM +86.46 lb-in.

(b) Date of rework.

(c) Type of rework: An oval shaped 350°F cure repair to all the outer skin plies and a full depth oval shaped core replacement with major and minor dimensions of 22 inches and 9 inches. The damaged skin panel was disassembled to facilitate heat blanket application to both sides of the panel. The final outer adhesive film sheet is also oval shaped with a major dimension of 28 inches and a minor dimension of 15 inches.

(d) Location of repair C.G.: +19.51 inches aft of the upper skin panel's forward fastener centerline at elevator station 60.

(e) Six weights were added to the upper surface of Bay 3 and two weights were added to the upper surface of Bay 4.

(f) Spaces remaining for weight addition: All upper spaces in Bay's 2, 3 and 4 are filled, leaving six in the lower surface of Bay 3 and two in the lower surface of Bay 4 available for weight and addition.

(g) The balance jig was not used to rebalance the elevator. This was the second rework since the balance jig was last used.

6. Sample Calculation - Rebalancing an Elevator On the Balance Jig

A. Example 3 - the following example demonstrates the type of procedure to be used when rebalancing a reworked elevator on the balance jig. Addition of adjust weights will be required. Assume that elevator 65C25746-1 from Example 2 in par. 5.C is damaged again and subsequently repaired and completely repainted except for the tab. All the upper bay surfaces have been previously filled but there are no weights in the lower bays. The current Static Balance Hinge Moment (SBHM) on the nameplate and in the elevator's records is +86.46 lb-in. The last two reworks of this elevator (prior to the current repair) and the corresponding rebalancing operations were done without the balance jig. Proceed with the rebalancing operations as follows.

6. A. (1) Because this is the third consecutive rework since previous rebalancing on the balance jig, it is mandatory to use the balance jig for the current rebalancing task.

(2) Refer to Fig. 2. Follow the instructions in this figure when reading this example.

(3) Fig. 2, step 1. Remove the elevator from the airplane per 27-31 of the 737 Maintenance Manual.

(4) Fig. 2, step 2. Mount the elevator (top surface up) on a balance jig stand making sure that it is in the proper configuration and that it is free to rotate about the support fittings.

(5) Fig. 2, step 3. There are no elevator balance adjust weights currently installed in the lower bay surfaces. All of the upper surface adjust weight spaces are currently filled, so no weights from the lower surface need to be moved to the upper surface locations.

(6) Fig. 2, step 4. Measure the Weight Reaction (WR):

WR = +5.89 lb.

NOTE: The elevator exerts a downward load on the support at the weight reaction point. Therefore, the sign is positive per 51-81, par. 7.

(7) Fig. 2, step 5. Determine the trial CBM. The constant moment arm (B) has a value of +22.31 inches (see Fig. 6). This distance is measured aft of the hinge line and is therefore positive per 51-81, par. 7. Calculate the trial Check Balance Moment (trial CBM):

$$\begin{aligned} \text{trial CBM} &= (WR)(B) \\ &= (+5.89)(22.31) \\ &= +131.41 \text{ lb-in.} \end{aligned}$$

(8) Fig. 2, step 6. This Check Balance Moment does not fall within allowable range of Table I, Fig. 2 under the column that presents the permissible range after rebalance on the jig. The elevator must therefore be rebalanced.

NOTE: When the elevator is being rebalanced on the balance jig the number of reworks is not significant with respect to Table I.

6. A. (9) Fig. 2, step 7. Add weights and measure Weight Reactions until getting a new trial CBM value which falls within allowable limits of Fig. 2, Table I. Referring to the RULES OF WEIGHT ADDITION in Fig. 2, general notes, a weight is added to the lower surface of Bay 3, since the upper surfaces of Bay's 2, 3 and 4 are already filled. Another Weight Reaction is taken and an new trial CBM is calculated.

(a) Measured WR = +5.52

Calculated new trial CBM = (WR)(B)
= (+5.52)(22.31)
= +123.15 lb-in.

(b) Second and third weights are added to the lower surface of Bay 3.

Measured WR = +4.78 lb

Calculated new trial CBM = (WR)(B)
= (+4.78)(+22.31)
= 106.64 lb-in.

(c) Fourth and fifth weights are added to the lower surface of Bay 3 to bring this new trial CBM into the preferred range of Table I.
Measured WR = +4.04

Calculated new trial CBM = (WR)(B)
= (+4.04)(+22.31)
= +90.13 lb-in.

(10) Fig. 2, step 8. Since this new trial CBM value falls within allowable limits of Table I, it becomes the new Static Balance Hinge Moment (new SBHM).

new SBHM - new trial CBM = +90.13 lb-in.

6. A. (11) Fig. 2, step 9. This new SBHM is stamped on the nameplate of the control surface. The airplane's elevator records should show the following information:

(a) The current SBHM = +90.13 lb-in.

(b) Date of rework.

(c) Type of rework.

(d) Location of rework.

(e) Five weights were added to the lower surface of Bay 3.

(f) Spaces remaining for weight addition: All upper spaces in Bay's 2, 3 and 4 are filled. There is one space left in the lower surface of Bay 4.

(g) The balance jig was used to rebalance the elevator for this rework.

OFF-THE-JIG REBALANCE INSTRUCTIONS

1. Calculate the trial Check Balance Moment (trial CBM) and rebalance the elevator. (Maintain sign conventions per 51-81 except where noted.)

   (A) Measure distance D (see Fig. 6).

   (B) Calculate distance Y (see Fig. 6).
   (FOR ELEVATOR STA 24.90 THRU 149.12 AND 213.32 THRU OUTBD END OF ELEVATOR)
   Y = D (COS 8°) + 1.3 = D (0.9903) + 1.3
   = _____in.
   (FOR ELEVATOR STA 149.12 THRU 213.32)
   Y = D (COS 8°) + 1.6 = D (0.9903) + 1.6
   = _____in.

   (C) Calculate the Weight removed (Wr).
   Wr = +_____lb. (KEEP POSITIVE)

   (D) Calculate the Weight added (Wa).
   Wa =_____lb.

   (E) Calculate the Rework Weight (RW).
   RW is the net change in weight due to rework.
   RW = Wa - Wr =_____lb.

   (F) Calculate the Rework Moment (RM).
   RM is the net change in balance moment due to rework.
   RM = (RW)(Y) =_____lb-in.

   (G) Calculate the trial Check Balance Moment (trial CBM). Static Balance Hinge Moment (SBHM) is the previous final moment value stamped on the nameplate of each control surface.
   trial CBM = SBHM + RM =_____lb-in.

2. Check that the criteria of par. 3.A. (in the text) have been met. If they have, then continue, if not, balance on the jig per Fig. 2.

3. If the calculated trial CBM is within allowable range of Table I, then go to step 6. If not, then the elevator must be rebalanced. (Proceed to step 4.)

4. To rebalance the elevator, add or remove weights using Tables II,III,IV,IIIA, and IVA until the trial CBM is within allowable limits of Table I, as calculated in step 5. Access to the upper surfaces of Bays 2, 3 and 4 is possible only when the elevator is off the airplane. When the elevator is on the airplane access is available for weight addition on the lower surfaces of Bay 3 and Bay 4 only.

5. Using the RULES OF WEIGHT ADDITION in the general notes calculate the new trial CBM by adding or subtracting ΔM's one at a time and their corresponding number of weights to the current trial CBM until it is within allowable limits of Table I. When the new trial CBM is within allowable range, then go to step 6.

   When adding weights:

   new trial CBM = trial CBM $+\Delta M_1 + \Delta M_2 + \Delta M_3 + \Delta M_4 + \Delta M_5$ =_____lb-in.

   When removing weights:

   new trial CBM = trial CBM $-\Delta M_1 - \Delta M_2 - \Delta M_3 - \Delta M_4 - \Delta M_5$ =_____lb-in.

   If all the weight spaces have been filled and the new trial CBM is still not within range, then try balancing on the balance jig.

6. When the trial CBM or the new trial CBM is within allowable limits of Table I, then:
   new SBHM = trial CBM or new trial CBM

7. Stamp the new SBHM on the elevator nameplate. The elevator's records should show:

   (A) Current SBHM.

   (B) Date of rework.

   (C) Type of rework.

   (D) Location of rework.

   (E) Number of weights added and their positions (upper Bay numbers and lower Bay numbers).

   (F) Current total number of weights (weights added plus existing weights) and their positions.

   (G) State whether or not the jig was used.

Rebalancing a Reworked Elevator Without the Balance Jig
Figure 1 (Sheet 1)

228874

WARNING: USE THE CORRECT ROW OF TABLE I FOR THE ELEVATOR ASSEMBLIES BEING BALANCED. FLIGHT SAFETY COULD BE ADVERSELY AFFECTED IF BALANCED TO THE WRONG ASSEMBLIES REQUIREMENTS.

ELEVATOR ASSEMBLIES	ALLOWABLE CHECK BALANCE MOMENT (CBM) RANGE OR STATIC BALANCE HINGE MOMENT (SBHM) RANGE			
	PREFERRED RANGE AFTER FIRST REWORK WITHOUT THE BALANCE JIG (POUND-INCHES)	PERMISSIBLE RANGE AFTER FIRST REWORK WITHOUT THE BALANCE JIG (POUND-INCHES)	PREFERRED RANGE AFTER SECOND REWORK WITHOUT THE BALANCE JIG (POUND-INCHES)	PERMISSIBLE RANGE AFTER SECOND REWORK WITHOUT THE BALANCE JIG (POUND-INCHES)
65C25746 -1,-2,-19,-20,-27,-28, -59,-60,-65,-66,-67, -68,-81,-82,-105,-106, -119,-120,-123,-124, -129,-130	+80.0 TO +100 INCLUSIVE	+80.0 TO +120 INCLUSIVE	+85.0 TO +100 INCLUSIVE	+85.0 TO +115 INCLUSIVE

TABLE I

NOTES

- TABLE I APPLIES WHEN THE ELEVATOR IS REBALANCED WITHOUT THE BALANCE JIG
- SEE FIG. 2 FOR REBALANCING A REWORKED ELEVATOR ON THE BALANCE JIG
- TABLE II APPLIES TO THE UPPER SURFACE OF BAY 2 (ACCESS AVAILABLE ONLY WITH THE ELEVATOR REMOVED FROM THE AIRPLANE)
- TABLES III AND IV APPLY TO THE UPPER SURFACES OF BAY 3 AND BAY 4 RESPECTIVELY (ACCESS AVAILABLE ONLY WITH THE ELEVATOR REMOVED FROM THE AIRPLANE)
- TABLES IIIA AND IVA APPLY TO THE LOWER SURFACE OF BAY 3 AND BAY 4 RESPECTIVELY (ACCESS AVAILABLE ON OR OFF AIRPLANE)
- IF REQUIRED, REMOVE THE ELEVATOR FROM THE AIRPLANE PER 27-31 OF THE 737 MAINTENANCE MANUAL
- IF THIS IS THE THIRD OR LATER REWORK SINCE THE LAST REBALANCING ON THE BALANCE JIG, THEN THE JIG MUST BE USED
- FOR A COMPLETE PAINT SEE 51-60-00 PAR. 4 AND CALCULATE A RM AND TRIAL CBM FROM THE INSTRUCTIONS LOCATED THERE AND PROCEED TO STEP 2 IN THIS FIGURE. FOR PARTIAL REPAINT USE TABLE IV IN 51-81 TO CALCULATE THE WEIGHT ADDED (Wa) AND PROCEED THRU STEPS 1.(A) THRU 1.(G) ONLY IF THE CRITERIA OF PAR. 3.A. (IN THE TEXT) CAN BE MET. OTHERWISE REBALANCE THE ELEVATOR ON THE JIG
- RULES OF WEIGHT ADDITION

  1) FILL UPPER SURFACE OF BAY 2 FIRST (ACCESS PERMITTING)
  2) FILL UPPER SURFACE OF BAY 3 SECOND (ACCESS PERMITTING)
  3) FILL UPPER SURFACE OF BAY 4 THIRD (ACCESS PERMITTING)
  4) FILL LOWER SURFACE OF BAY 3 FOURTH
  5) FILL LOWER SURFACE OF BAY 4 LAST
  6) WHEN REMOVING WEIGHTS, EMPTY THE BAYS IN REVERSE ORDER
  7) FOR MAXIMUM NUMBER OF WEIGHTS PER BAY, SEE SECTION B-B OF FIG. 4
  8) DO NOT ADD ELEVATOR ADJUST WEIGHT TO THE LOWER SURFACE OF BAY 2. THE LOWER SURFACE OF BAY 2 IS RESERVED FOR ELEVATOR TAB ADJUST WEIGHTS ONLY

Rebalancing a Reworked Elevator Without the Balance Jig
Figure 1 (Sheet 2)

UPPER ELEVATOR BAY 2 ADJUST WEIGHT AND MOMENT TABLE		
FILL UPR SURFACE OF BAY 2 FIRST (ACCESS TO BAY 2 AVAILABLE WITH ELEVATOR OFF THE AIRPLANE ONLY)		
NUMBER OF 1.0 POUND ADJUST WEIGHTS ADDED THIS REWORK (MAX SHOWN)	BALANCE ARM (INCH)	TOTAL CHANGE IN MOMENT (ΔM1) (LB-IN.)
0	-9.6	0
1	-9.6	- 9.6
2	-9.6	-19.2
3	-9.6	-28.8
4	-9.6	-38.4
5	-9.6	-48.0
6	-9.6	-57.6

TABLE II FOR UPPER BAY 2

UPPER SURFACE BAY 3 ADJUST WEIGHT AND MOMENT TABLE		
FILL UPR SURFACE OF BAY 3 SECOND (ACCESS TO UPR BAY 3 AVAILABLE WITH ELEVATOR OFF THE AIRPLANE ONLY)		
NUMBER OF 1.0 POUND ADJUST WEIGHTS ADDED THIS REWORK (MAX SHOWN)	BALANCE ARM (INCH)	TOTAL CHANGE IN MOMENT (ΔM3) (LB-IN.)
0	-8.3	0
1	-8.3	- 8.3
2	-8.3	-16.6
3	-8.3	-24.9
4	-8.3	-33.2
5	-8.3	-41.5
6	-8.3	-49.8

TABLE III FOR UPPER BAY 3

LOWER SURFACE BAY 3 ADJUST WEIGHT AND MOMENT TABLE		
FILL LWR SURFACE OF BAY 3 FOURTH (ACCESS TO LWR BAY 3 AVAILABLE WITH ELEVATOR ON OR OFF THE AIRPLANE)		
NUMBER OF 1.0 POUND ADJUST WEIGHTS ADDED THIS REWORK (MAX SHOWN)	BALANCE ARM (INCH)	TOTAL CHANGE IN MOMENT (ΔM3) (LB-IN.)
0	-8.3	0
1	-8.3	- 8.3
2	-8.3	-16.6
3	-8.3	-24.9
4	-8.3	-33.2
5	-8.3	-41.5
6	-8.3	-49.8

TABLE IIIA FOR LOWER BAY 3

UPPER SURFACE BAY 4 ADJUST WEIGHT AND MOMENT TABLE		
FILL UPR SURFACE OF BAY 4 THIRD (ACCESS TO UPR BAY 4 AVAILABLE WITH ELEVATOR OFF THE AIRPLANE ONLY)		
NUMBER OF 1.0 POUND ADJUST WEIGHTS ADDED THIS REWORK (MAX SHOWN)	BALANCE ARM (INCH)	TOTAL CHANGE IN MOMENT (ΔM4) (LB-IN.)
0	-7.0	0
1	-7.0	- 7.0
2	-7.0	-14.0

TABLE IV FOR UPPER BAY 4

LOWER SURFACE BAY 4 ADJUST WEIGHT AND MOMENT TABLE		
FILL LWR SURFACE OF BAY 4 FIFTH (ACCESS TO LWR BAY 4 AVAILABLE WITH ELEVATOR ON OR OFF THE AIRPLANE)		
NUMBER OF 1.0 POUND ADJUST WEIGHTS ADDED THIS REWORK (MAX SHOWN)	BALANCE ARM (INCH)	TOTAL CHANGE IN MOMENT (ΔM4) (LB-IN.)
0	-7.0	0
1	-7.0	- 7.0
2	-7.0	-14.0

TABLE IVA FOR LOWER BAY 4

Rebalancing a Reworked Elevator Without the Balance Jig
Figure 1 (Sheet 3)

228878

ON-THE-JIG REBALANCE INSTRUCTIONS

1. Remove the elevator from the airplane per 27-31 of the 737 Maintenance Manual.

2. Mount the elevator (top surface up) on a balance jig stand or balance beam as shown in Fig. 3. Use the mounting point locations shown in Fig. 4. Ensure that the elevator is in the configuration shown in Fig. 5. When mounted on the jig the elevator must be free to rotate about the support fittings without binding.

3. Move currently installed adjust weights from the lower bay surfaces to the upper bay surfaces until all upper surfaces are filled or until no more weights remain on the lower surface. Fill the upper surface of Bay 2 first then the upper surface of Bay 3 next and the upper surface of Bay 4 last. Any remaining weights on the lower surface should be located in Bay 3 if space permits.

4. With the chord plane horizontal, measure the Weight Reaction (WR) in pounds at a known moment arm B in inches. Measure the Weight Reaction at the mounting point location shown in Fig. 4 and Fig. 6. This mounting point is a tab hinge point.

5. Calculate a trial CBM by multiplying the Weight Reaction by the moment arm B (B = 22.31 inches as shown in Fig. 6). Observe the proper sign conventions shown in 51-81, par. 7.

   trial CBM = (WR)(B)
   = (WR)(22.31)
   = _____lb-in.

6. If the trial CBM is within allowable limits of Fig. 2, Table I, then go to step 8. If not, then the elevator must be rebalanced. (Proceed to step 7.)

7. To rebalance the elevator, add or remove weights using the RULES OF WEIGHT ADDITION in the general notes until getting a Weight Reaction (WR) which gives a new trial CBM that falls within allowable range of Table I. When it is, go to step 8.

   new Trial CBM = (WR)(B)
   = (WR)(22.31)
   = _____lb-in.

   If all the weight positions are filled and the permissible limits of Table I are still not met, then the elevator will need to be recondioned or replaced. See 51-81, par. 1.C. and 1.G.

8. When the trial CBM or the new trial CBM is within allowable limits of Table I then:

   New SBHM = trial CBM or new trial CBM

9. Stamp the new SBHM on the elevator nameplate. The elevator's records should show:

   1) Current SBHM.
   2) Date of rework.
   3) Type of rework.
   4) Location of rework.
   5) Number of weights added and their positions (upper Bay numbers and lower Bay numbers).
   6) Current total number of weights (weights added plus existing weights) and their positions.
   7) State whether or not the jig was used.

WARNING: USE THE CORRECT ROW OF TABLE I FOR THE ELEVATOR ASSEMBLIES BEING BALANCED. FLIGHT SAFETY COULD BE ADVERSELY AFFECTED IF BALANCED TO THE WRONG ASSEMBLIES REQUIREMENTS.

ALLOWABLE CHECK BALANCE MOMENT (CBM) RANGE OR STATIC BALANCE HINGE MOMENT (SBHM) RANGE		
ELEVATOR ASSEMBLIES	PREFERRED RANGE AFTER REBALANCE ON BALANCE JIG (POUND-INCHES)	PERMISSIBLE RANGE AFTER REBALANCE ON BALANCE JIG (POUND-INCHES)
65C25746 -1,-2,-19,-20, -27,-28,-59,-60, -65,-66,-67,-68, -81,-82,-105, -106,-119,-120, -123,-124,-129, -130	+75.0 TO +100 INCLUSIVE	+75.0 TO +125 INCLUSIVE

TABLE I

Rebalancing a Reworked Elevator on the Balance Jig
Figure 2 (Sheet 1)

NOTES

- TABLE I APPLIES ONLY WITH THE ELEVATOR ON THE BALANCE JIG
- RULES OF WEIGHT ADDITION:

  1) FILL UPPER SURFACE OF BAY 2 FIRST

  2) FILL UPPER SURFACE OF BAY 3 SECOND

  3) FILL UPPER SURFACE OF BAY 4 THIRD

  4) FILL LOWER SURFACE OF BAY 3 FOURTH

  5) FILL LOWER SURFACE OF BAY 4 LAST

  6) WHEN REMOVING WEIGHTS, EMPTY THE BAYS IN REVERSE ORDER

  7) FOR MAXIMUM NUMBER OF WEIGHTS PER BAY, SEE SECTION B-B OF FIG. 4

  8) DO NOT ADD ELEVATOR ADJUST WEIGHTS TO THE LOWER SURFACE OF BAY 2. THE LOWER SURFACE OF BAY 2 IS RESERVED FOR ELEVATOR TAB ADJUST WEIGHTS ONLY

Rebalancing a Reworked Elevator on the Balance Jig
Figure 2 (Sheet 2)

228879

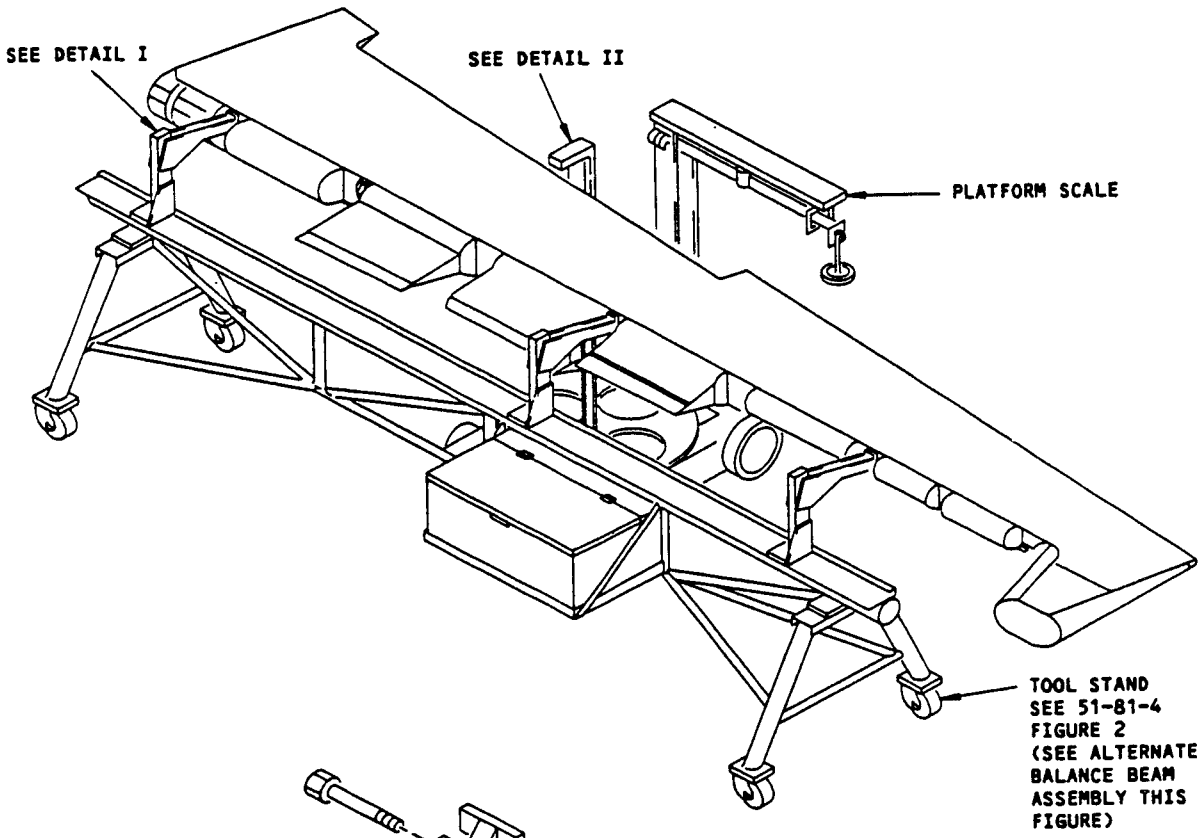

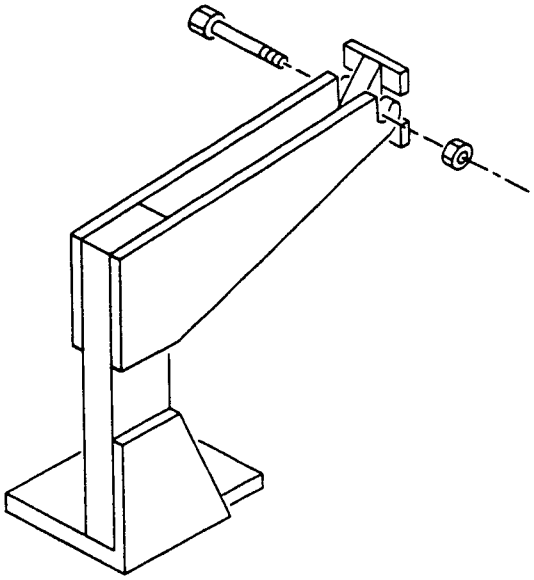

FWD HINGE SUPPORT
DETAIL I

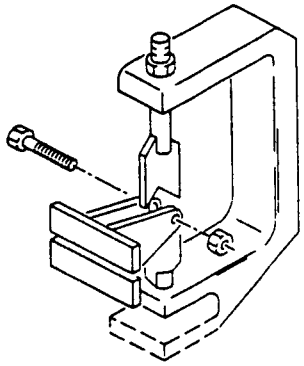

AFT HINGE SUPPORT
DETAIL II

Elevator Support During Balancing
Figure 3 (Sheet 1)

229135

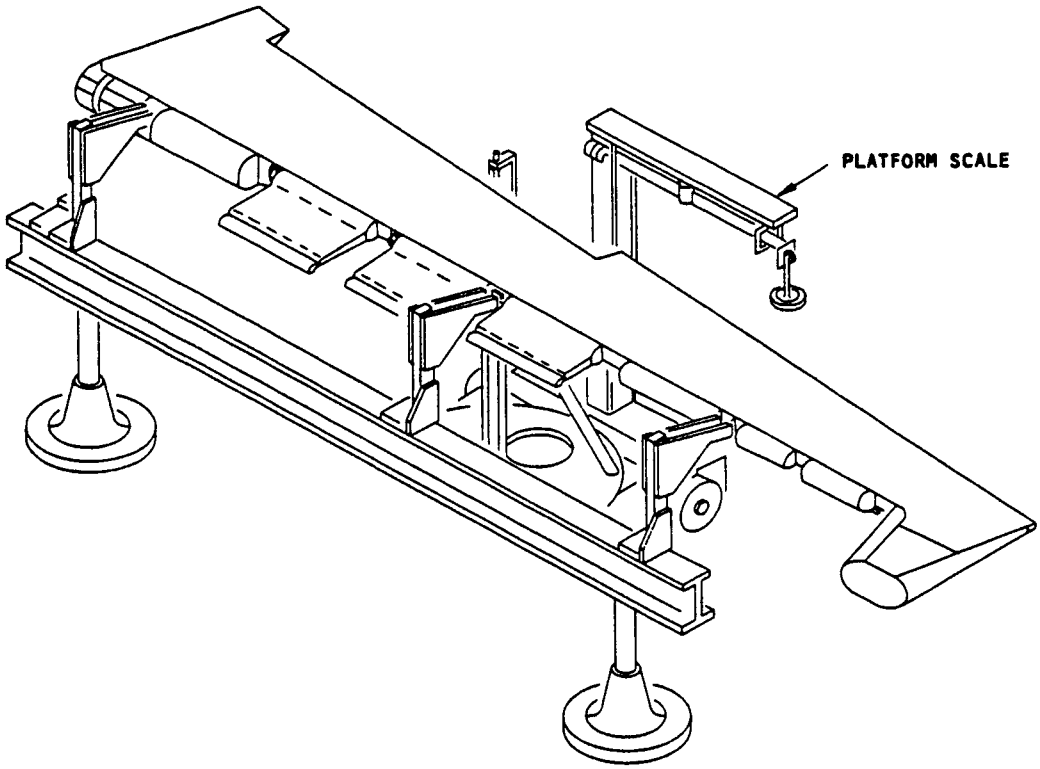

BALANCE BEAM ASSEMBLY
(SEE 51-81 FIGURE 2)

Elevator Support During Balancing
Figure 3 (Sheet 2)

229139

REF DWG
65C25746

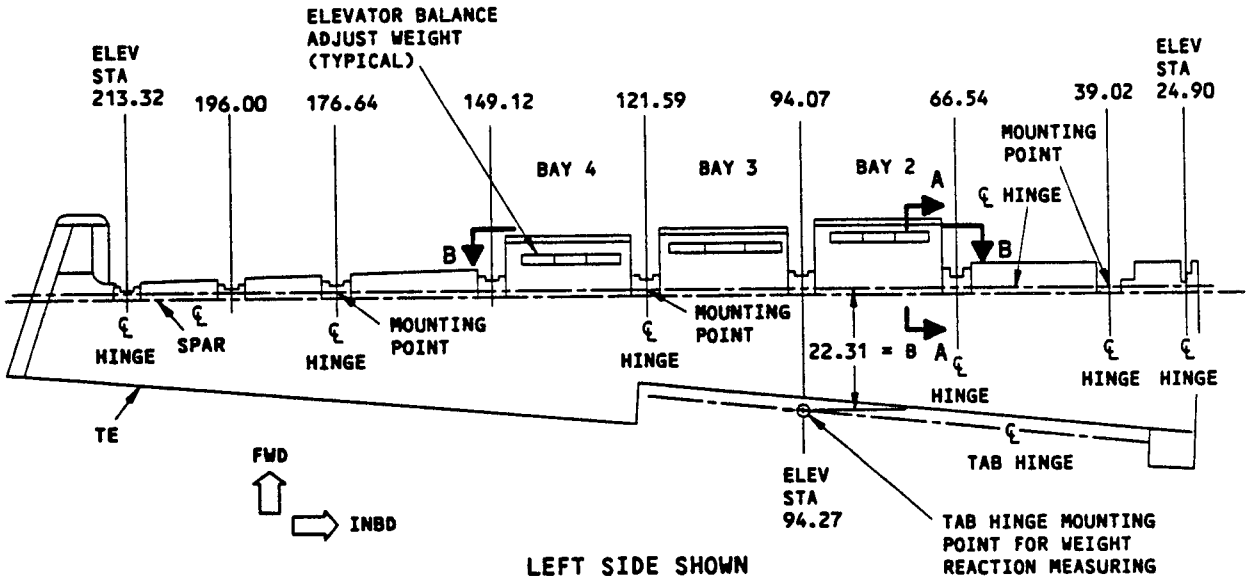

LEFT SIDE SHOWN
TOP VIEW

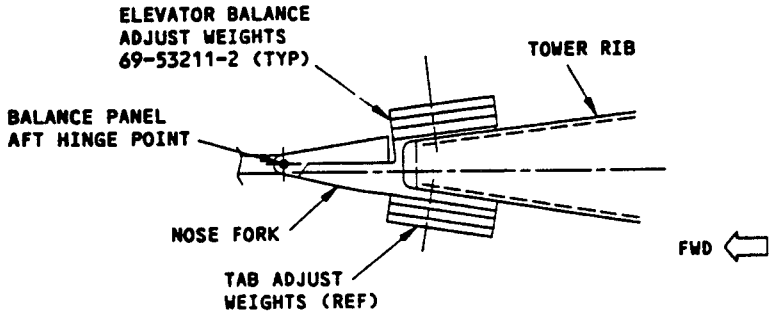

ELEVATOR BALANCE BAY 2
SECTION A-A
(ROTATED 90° CCW)

Elevator Mounting Points and Balance Weights Location Diagram
Figure 4 (Sheet 1)

229140

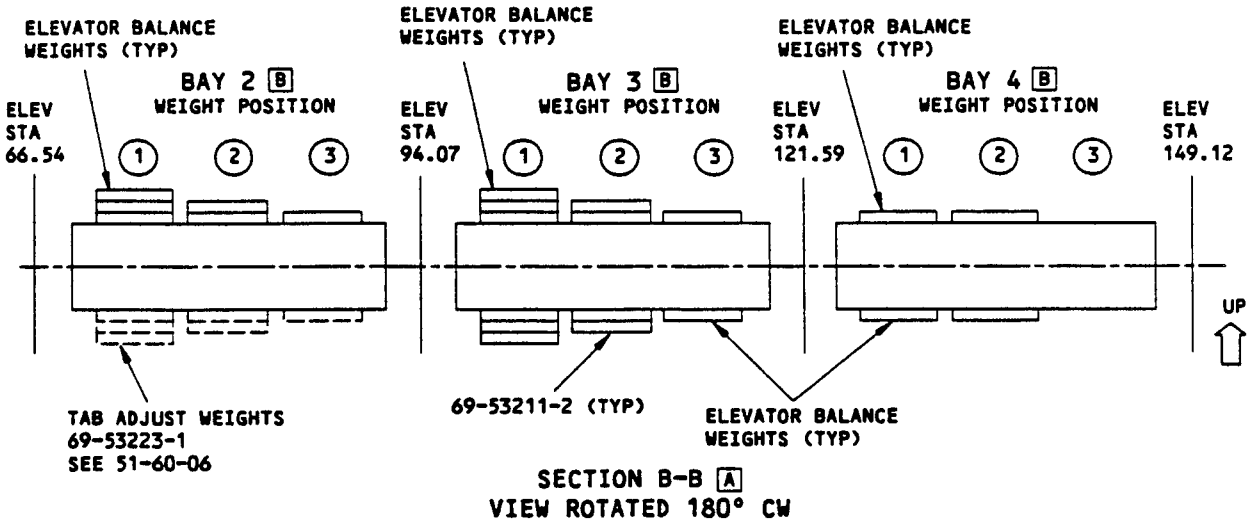

SECTION B-B A
VIEW ROTATED 180° CW

NOTES

- THE GRIP LENGTH OF BOLT DEPENDS ON NUMBER OF BALANCE WEIGHTS USED AND SHALL BE DETERMINED AS FOLLOWS:

NO. OF BAL WT USED	PART NO. OF BOLT TO BE USED
NONE	BACB30NF3-2
1	BACB30NF3-4
2	BACB30NF3-7
3	BACB30NF3-10

- THE GRIP LENGTH AND SIZE OF RIVET DEPENDS ON NUMBER OF BALANCE WEIGHTS USED AND SHALL BE DETERMINED AS FOLLOWS:

NO. OF BAL WT USED	PART NO. OF RIVET TO BE USED
NONE	NAS1398B5-3
1	NAS1398B6-5
2	NAS1398B6-8
3	NAS1398B6-10

A THE MAX QUANTITIES OF 69-53211-2 WEIGHTS ARE AS SHOWN

B ACCESS TO THE UPPER WEIGHT POSITIONS OF THE BALANCE BAYS IS POSSIBLE ONLY WHEN THE ELEVATOR IS REMOVED FROM THE AIRPLANE

Elevator Mounting Points and Balance Weights Location Diagram
Figure 4 (Sheet 2)

229143

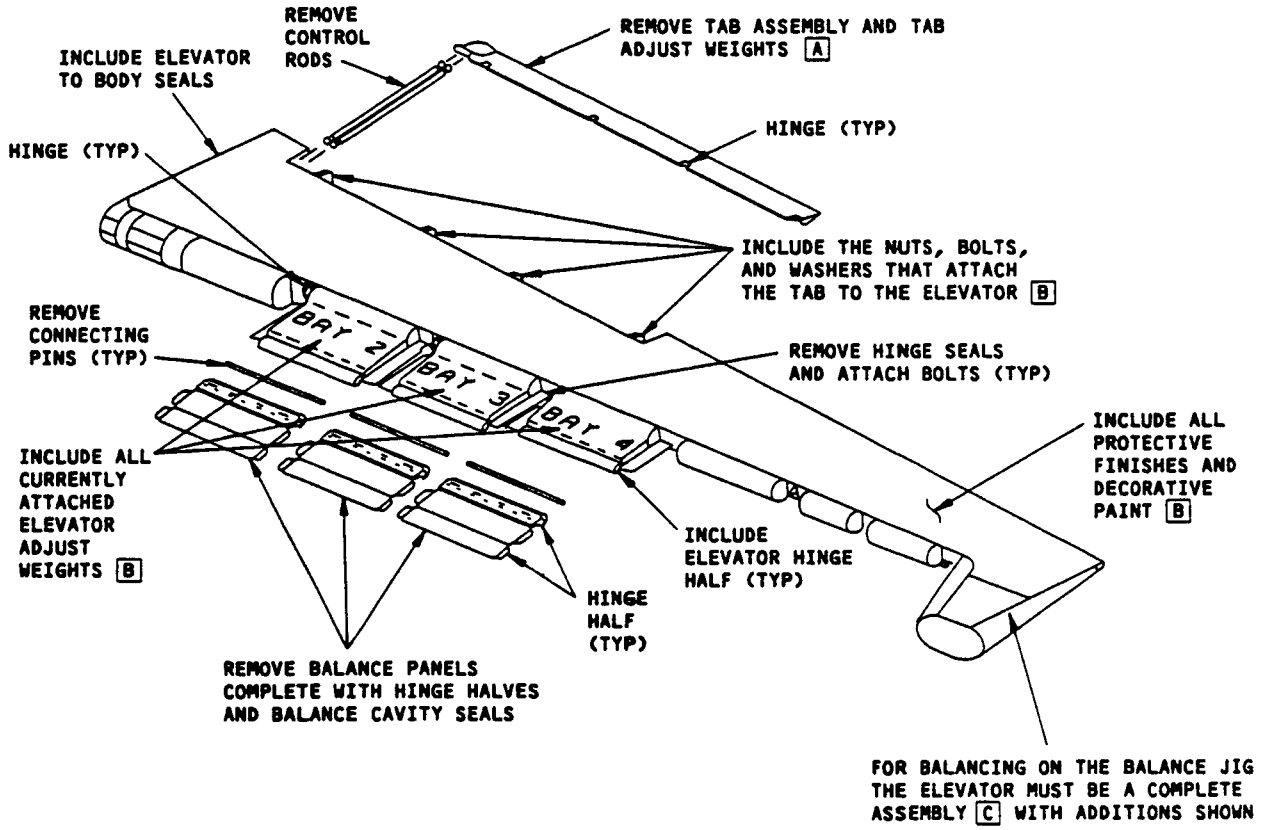

NOTES

A TAB ADJUST WEIGHTS ARE LOCATED ON THE LOWER SURFACE OF BALANCE BAY 2. SEE 51-81-6, FIG. 2 FOR LOCATION

B THESE PARTS ARE INCLUDED IN ADDITION TO THOSE OF THE ELEVATOR ASSEMBLY

C THIS ELEVATOR ASSEMBLY INCLUDES LIGHTNING DIVERTERS AND STATIC DISCHARGERS

Configuration of Elevator at Time of Balancing on the Balance Jig
Figure 5

229136

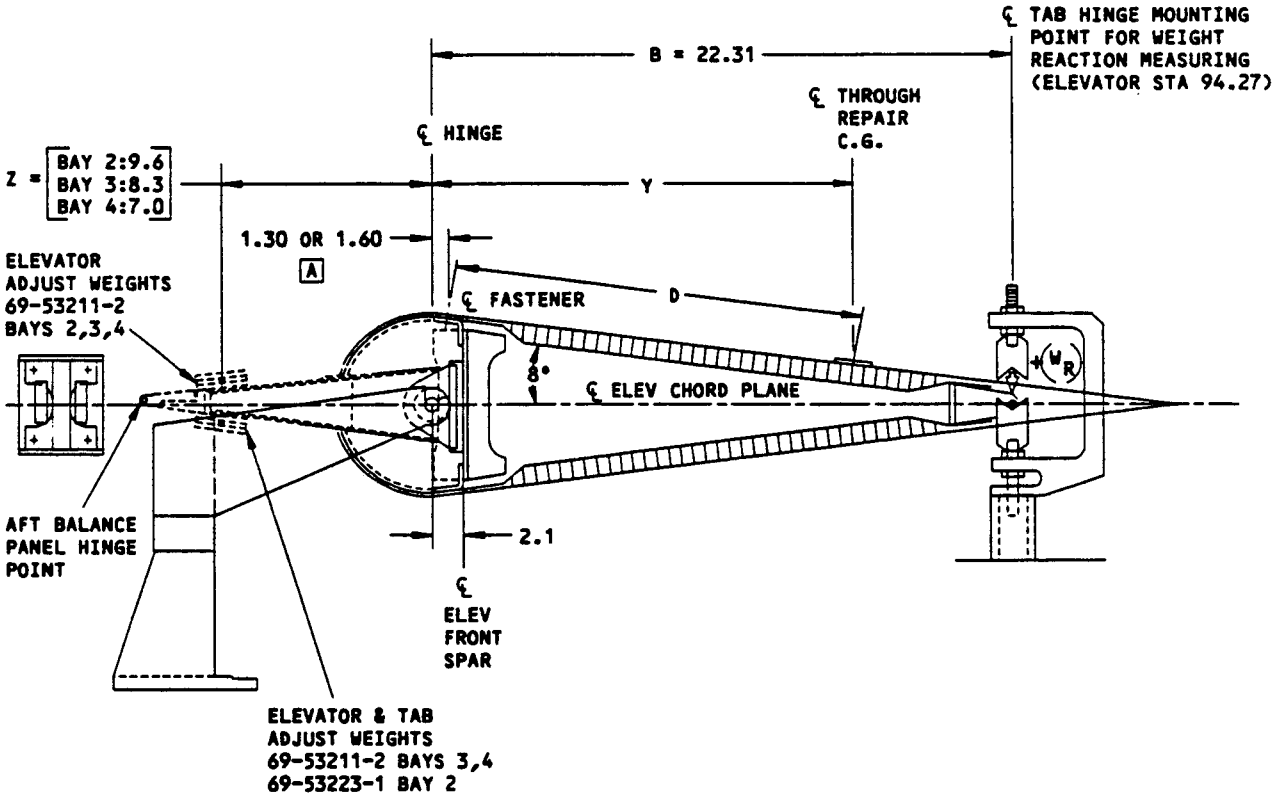

NOTE

A 1.3 DIMENSION FOR FASTENER CENTERLINE FROM ELEVATOR STATION 24.90 THRU 149.12 AND FROM ELEVATOR STATION 213.32 THRU OUTBD END OF ELEVATOR. BETWEEN ELEVATOR STATION 149.12 THRU 213.32 USE 1.6 DIMENSION

Elevator Balancing Diagram
Figure 6

229144

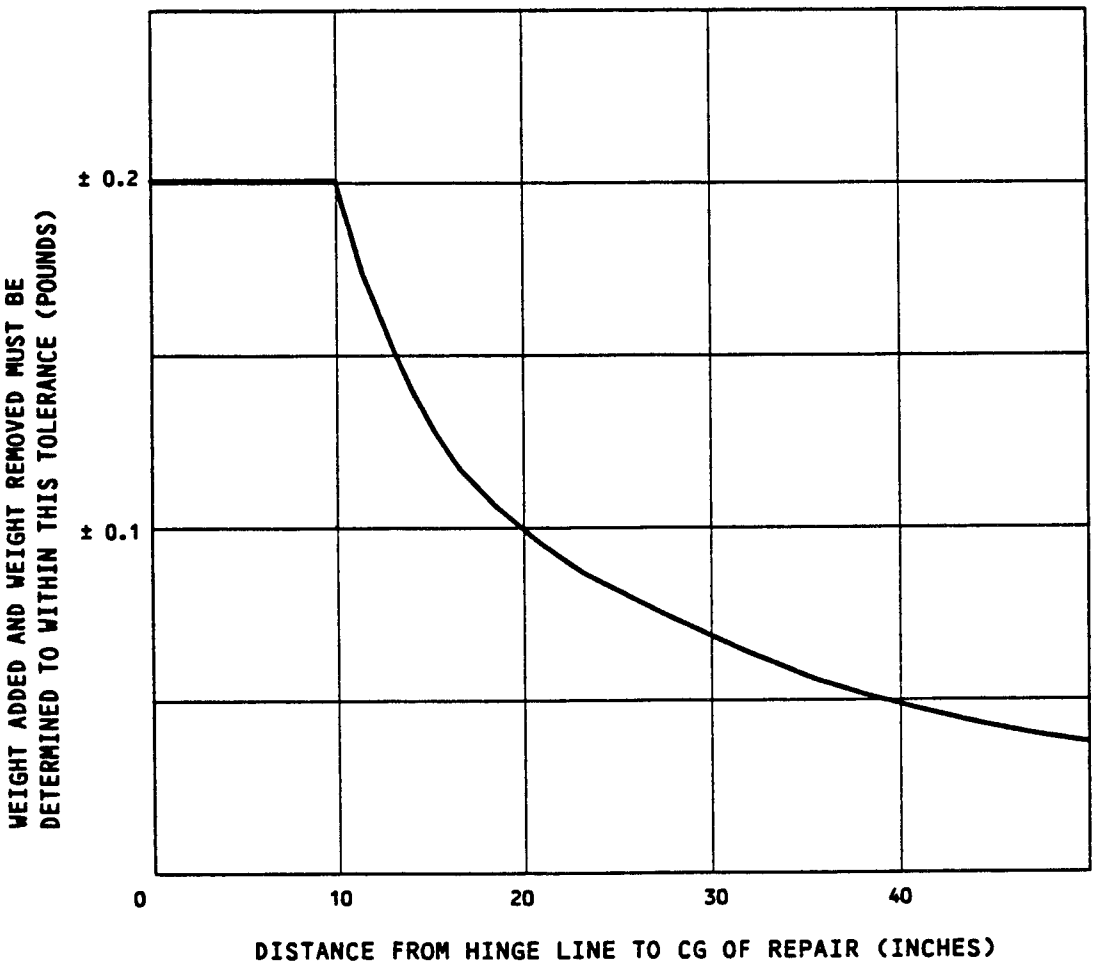

Weight Tolerance Requirements for Balancing Elevator Off the Jig
Figure 7

229141

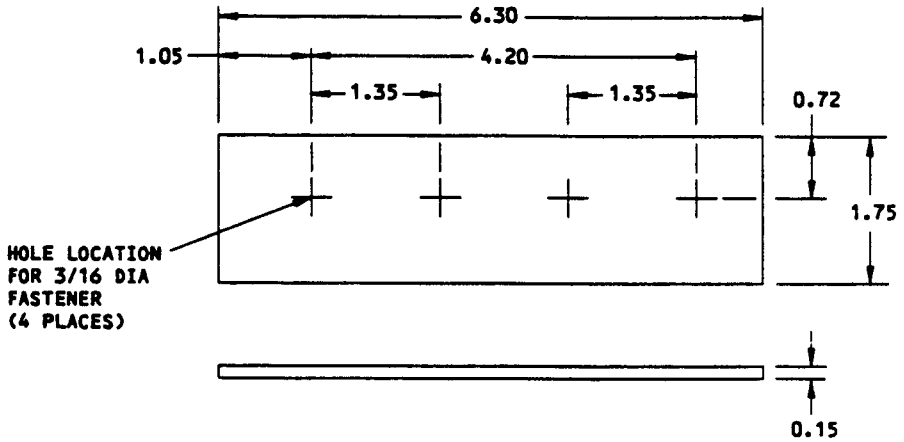

NOTE

- PART NO. 69-53211-2
- MATERIAL SINTERED TUNGSTEN ALLOY
  TYPE II CLASS I PER MIL-T-21014
  WEIGHT 1.00 LBS
- CADMIUM PLATE TO MEET REQUIREMENTS
  OF QQ-P-416 TYPE II CLASS 2 AND
  APPLY ONE COAT OF BMS 10-11 PRIMER
  AND ONE COAT OF TYPE 2 EPOXY ENAMEL

Elevator Balance Adjust Weight
Figure 8

229146

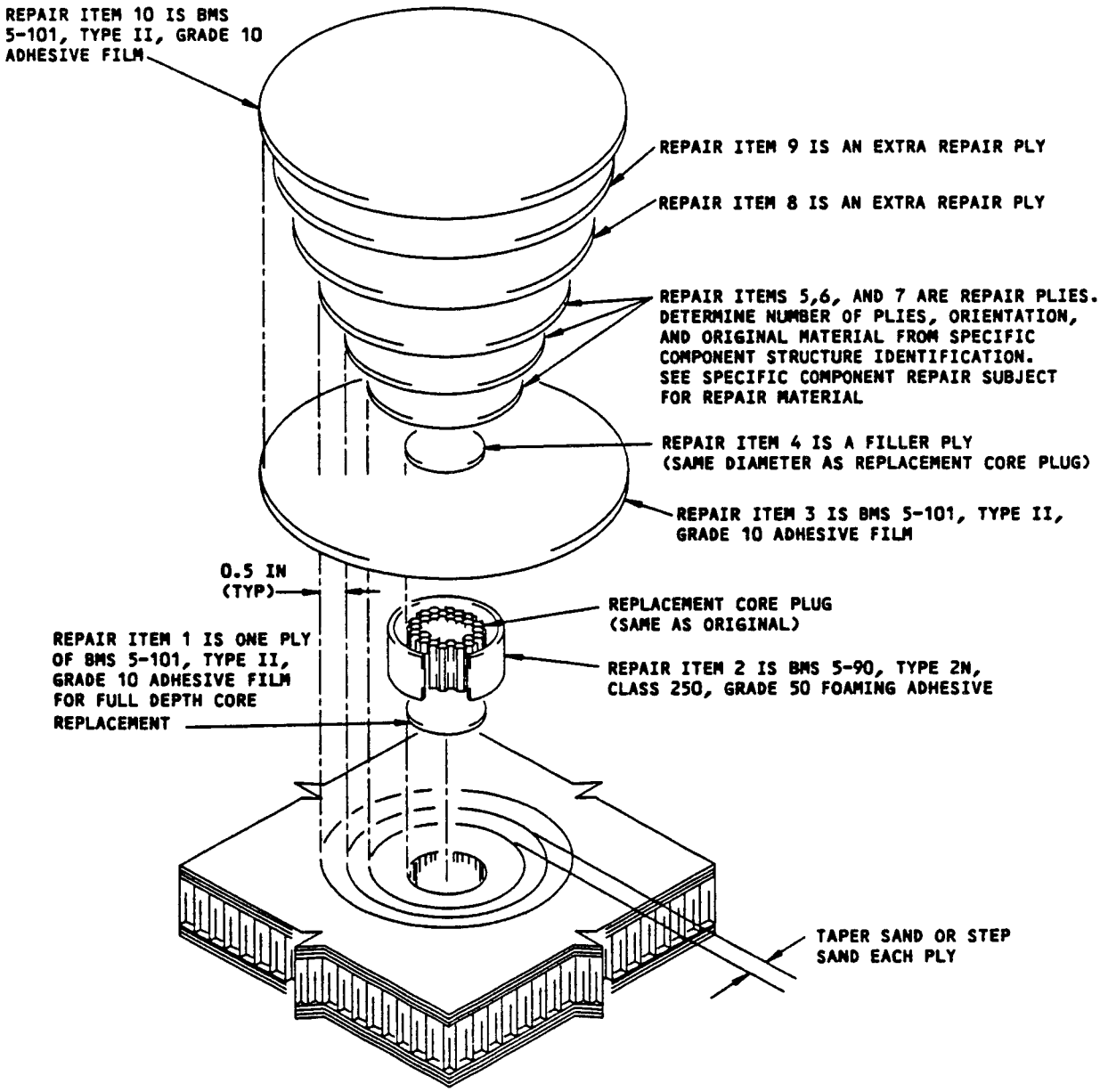

NOTES

- REPAIR ITEMS 1,2,3,4,8,9, AND 10 ARE EXTRA MATERIALS AND ADD WEIGHT TO THE REPAIR AREA ABOVE THAT WHICH WAS REMOVED AND IS BEING REPLACED
- REPAIR ITEMS 5,6, AND 7 ARE REPLACING ORIGINAL PLIES OF APPROXIMATELY THE SAME AREA BUT OF DIFFERENT WEIGHT PER UNIT AREA

Repair (Typ) - Repair of Damage, Greater Than 0.50-inch Diameter, to One Skin and Honeycomb Core
Figure 9

229142

WEIGHT CONTROL PROCEDURE FOR BALANCE PANEL ON GRAPHITE COMPOSITE ELEVATOR

WARNING: USE 51-81-5 FOR GRAPHITE COMPOSITE ELEVATOR BALANCE PANEL PROCEDURES. USE 51-80-5 FOR GLASS FABRIC/METAL ELEVATOR BALANCE PANEL PROCEDURES. FAILURE TO COMPLY CAN PRODUCE UNDESIRABLE FLUTTER AND DYNAMIC INSTABILITY WHICH COULD AFFECT FLIGHT SAFETY.

1. Weight Requirements

A. The balance panels themselves are not balanced, but their weight affects the balance of the elevator. The weights of the panels are therefore limited as follows:

Panel 65-52899	for Bay 2	5.01 to 5.55 lb.
Panel 65-52900	for Bay 3	5.02 to 5.47 lb.
Panel 65-52901	for Bay 4	4.93 to 5.29 lb.

B. For configuration of the elevator balance panel at time of weighing, see Fig. 1.

C. Where repairs would result in the panel weight being in excess of the maximum permitted in Par. 1.A. above, the panel must be replaced with one of the correct weight.

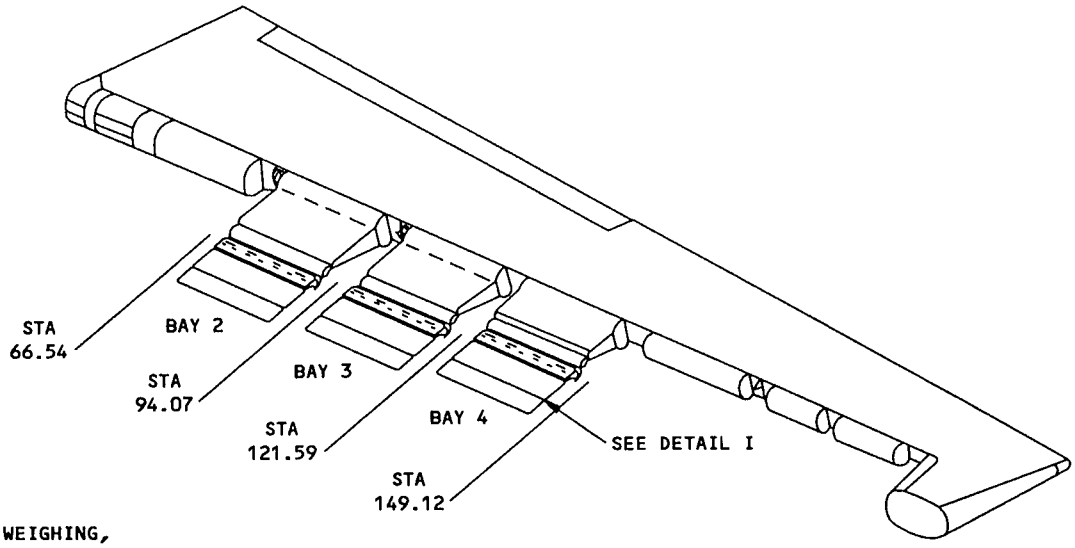

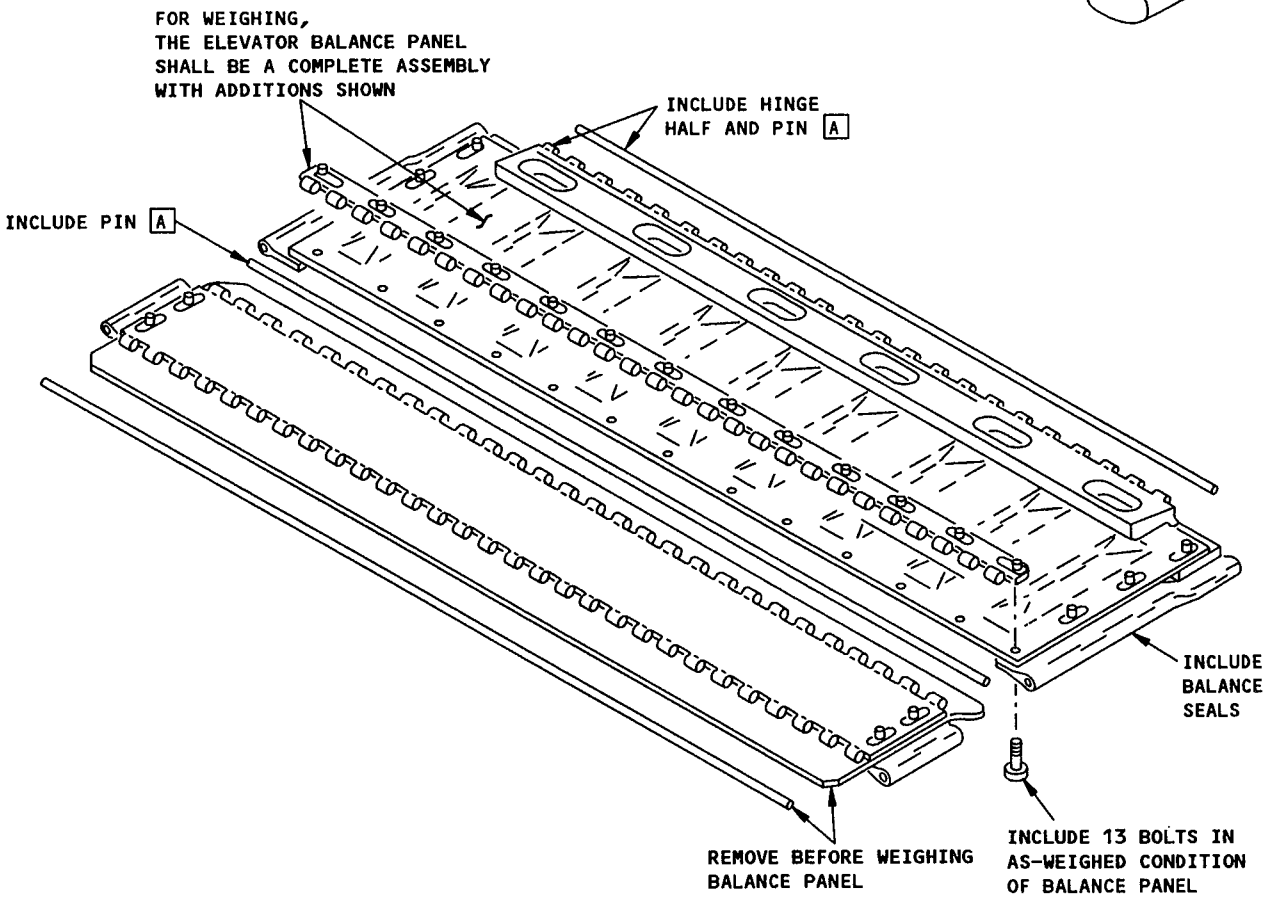

TYPICAL PANEL
DETAIL I

NOTE

A THESE PARTS ARE INCLUDED IN ADDITION TO THOSE OF THE BALANCE PANEL ASSEMBLY

Elevator Balance Panels As-Weighed Condition
Figure 1

BALANCE PROCEDURE FOR TAB ON GRAPHITE COMPOSITE ELEVATOR

WARNING: USE 51-81-6 FOR GRAPHITE COMPOSITE ELEVATOR TAB BALANCING. USE 51-80-6 FOR GLASS FABRIC/METAL ELEVATOR TAB BALANCING. FAILURE TO COMPLY CAN PRODUCE UNDESIRABLE FLUTTER AND DYNAMIC INSTABILITY WHICH COULD AFFECT FLIGHT SAFETY.

1. Adjustment of Elevator Balance for Change in Tab Weight

A. The elevator tab (65C26384) is not balanced but its weight affects the balance of the elevator; consequently, the tab weight must be less than or equal to 6.30 pounds. In the elevator balance system, tab adjust weights are mounted on the lower surface of the bay 2 elevator fork fitting and balance out variations in the tab weight. For a given total tab weight, a specified total number of adjust weights is called out. For example, a heavier tab requires a greater number of adjust weights (see Table in Fig. 1).

NOTE: The adjust weights do not balance out the entire weight of the tab, but only that portion above a certain base weight.

B. Although the tab adjust weights are mounted on the lower surface of bay 2 elevator fork fitting, they are considered part of the tab, and must never be separated from it. At time of installation of the surface, the adjust weights must be mounted on the nose fork in their correct locations (see Fig. 2).

NOTE: Due to the importance of the tab weight, the actual weight of the tab and number of adjust weights shall be stamped on the tab per drawing.

C. For the condition of the tab for weighing, see Fig. 3.

NOTE: If the tab is reworked (repaired or painted) it must be reweighed, stamped with the new actual weight and adjust weights, and provided with the correct number of adjust weights.

D. If Boeing tab adjust weights are not available make parts using the dimensions and material shown in Fig. 1.

USE FOR ELEVATOR TAB 65C26384	
TOTAL TAB WEIGHT (POUNDS)	TOTAL NUMBER OF ADJUST WEIGHTS REQUIRED (69-53223)
LESS THAN 5.10	0
5.11 TO 5.30	1
5.31 TO 5.50	2
5.51 TO 5.70	3
5.71 TO 5.90	4
5.91 TO 6.10	5
6.11 TO 6.30	6

TABLE I

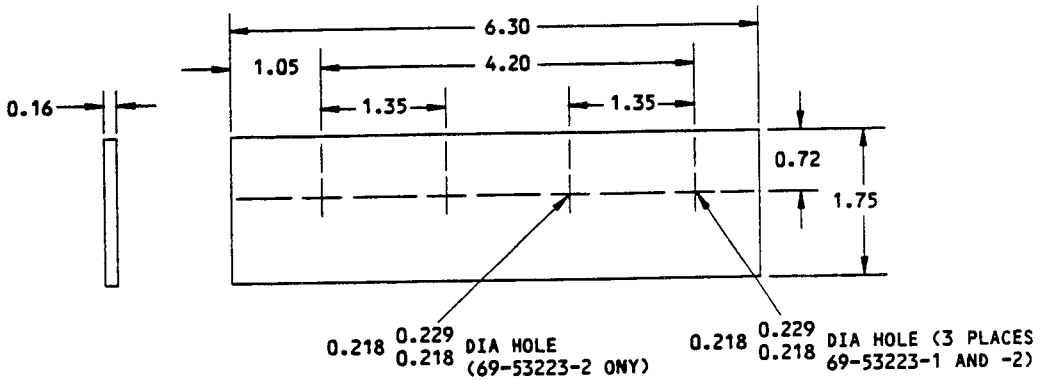

NOTES

- MATERIAL 4130 STEEL NORMALIZED
  250 FINISH ON EDGES
- PART NO. 69-53223-1 OR -2
- CADMIUM PLATE ACCORDING TO QQ-P-416 TYPE II CLASS 2 AND APPLY ONE COAT OF BMS 10-11 TYPE I PRIMER PLUS ONE COAT OF BMS 10-11 TYPE 2 ENAMEL (ORANGE)

Elevator Tab Adjust Weight Requirements
Figure 1

204309

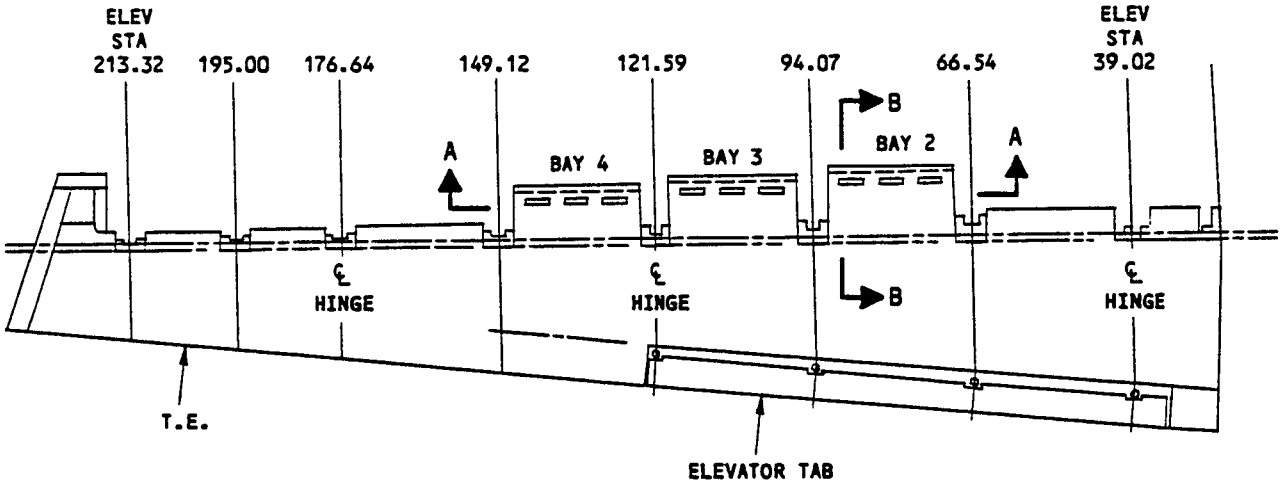

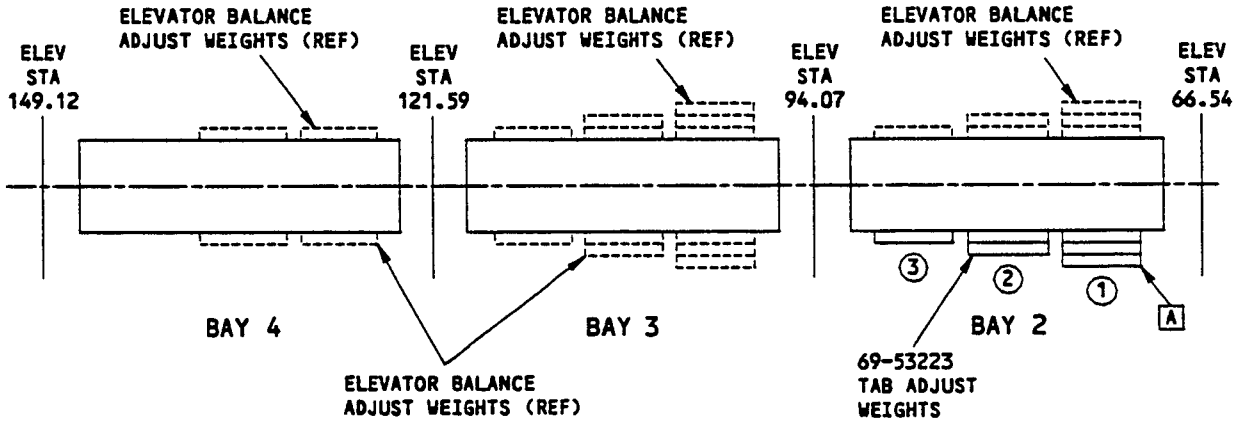

SECTION A-A

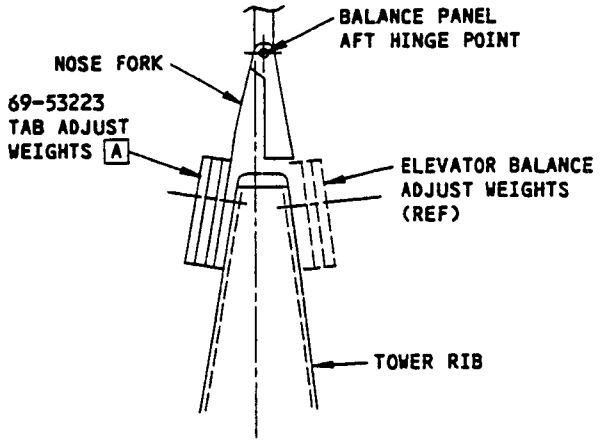

SECTION B-B

NOTE

A 3 WEIGHTS MAXIMUM IN POSITION 1, 2 IN POSITION 2 AND 1 IN POSITION 3. DO NOT STACK TAB ADJUST WEIGHTS 3 HIGH IN LOWER POSITION 1, UNLESS A TOTAL OF 6 TAB ADJUST WEIGHTS IS REQUIRED. TAB ADJUST WEIGHTS ARE ALLOWED IN BAY 2 ONLY (ON BOTTOM SURFACE OF ELEVATOR)

Elevator Tab Adjust Weights Location Diagram
Figure 2

204298

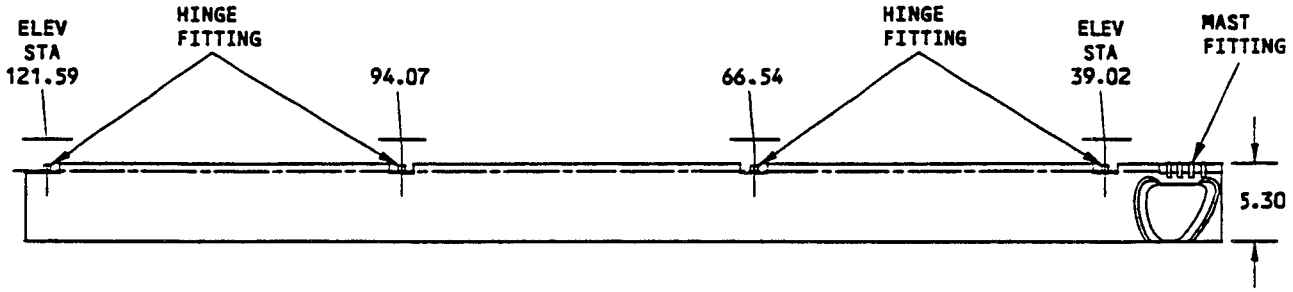

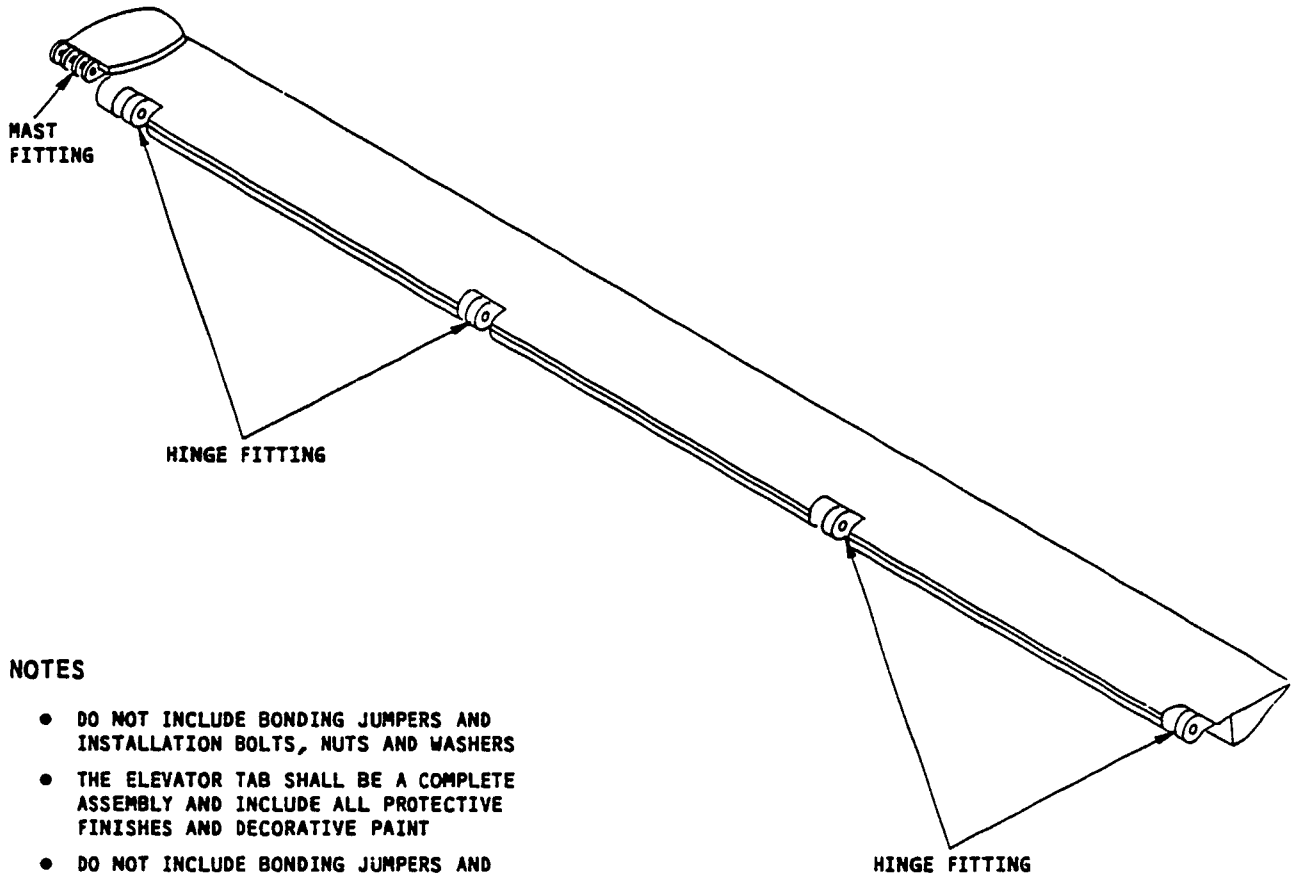

NOTES

- DO NOT INCLUDE BONDING JUMPERS AND INSTALLATION BOLTS, NUTS AND WASHERS
- THE ELEVATOR TAB SHALL BE A COMPLETE ASSEMBLY AND INCLUDE ALL PROTECTIVE FINISHES AND DECORATIVE PAINT
- DO NOT INCLUDE BONDING JUMPERS AND THEIR FASTENERS; OR INSTALLATION BOLTS, NUTS, AND WASHERS THAT ATTACH THE TAB TO THE ELEVATOR AT THE HINGES; OR CONTROL RODS AND THEIR INSTALLATION BOLTS, NUTS, AND WASHERS; OR ELEVATOR TAB ADJUST WEIGHTS

Elevator Tab As-Weighed Condition
Figure 3

20431C

GRAPHITE COMPOSITE RUDDER BALANCE PROCEDURE

WARNING: USE 51-81-7 FOR GLASS GRAPHITE COMPOSITE RUDDER BALANCING. USE 51-80-7 FOR GLASS FABRIC/METAL RUDDER BALANCING. FAILURE TO COMPLY CAN PRODUCE UNDESIRABLE FLUTTER AND DYNAMIC INSTABILITY WHICH COULD AFFECT FLIGHT SAFETY.

1. Rudder Balance Requirements - General

NOTE: For definition of terms and general control surface balancing procedures see 51-81.

A. This section presents the operational (in-service) balance requirements and rebalancing procedure for the rudder after a rework operation (repair or repaint).

B. The rudder must be balanced so that the Check Balance Moment (CBM) lies within the limits given in Table I, Fig. 1 or 2. The limits vary with the number of times the rudder has been reworked and rebalanced without the balance jig, so care must be taken to ensure that the correct figures are used.

C. The rudder may be rebalanced by one of two methods.

(1) The calculation procedure. This procedure does not require the use of the balance jig. The calculation procedure may be used with the rudder on or off the airplane as long as all the repair and balancing criteria are met. See par. 3 and Fig. 1 for Rebalancing a Reworked Rudder Without the Balance Jig. Care must be taken that the necessary data is recorded during the rework so that the calculations can be made accurately.

(2) The balance jig procedure. For configuration of the rudder at time of balancing on the balance jig, see Fig. 5. The rudder must be removed from the airplane to rebalance it on the balance jig. See Fig. 2 for Rebalancing a Reworked Rudder on the Balance Jig.

D. For Removal/Installation of the rudder refer to 27-21 of the 737 Maintenance Manual.

E. Once the rudder has been removed it is preferred (but not required) that it be rebalanced on the balance jig.

BOEING PROPRIETARY - Copyright © - Unpublished Work - See title page for details.

F. All rework moments must be recorded, even if rebalancing is not required, and must be taken into account when a further repair or repainting is carried out. Record each occasion when the elevator has been repaired or repainted and specify whether or not it was rebalanced on the jig. The repair type, location, date, and the number of weights added and the number of spaces available for weight addition should also be included.

2. Rework Operations Which Do Not Require Rebalancing

A. A rudder of known balance condition which remains within the limits specified in Fig. 1, Table I after the rework moment (RM) has been added or subtracted, does not require balance adjustment. See Fig. 1 for calculation procedure.

B. Rudders that remain within the limit specified in Fig. 2, Table I after the Weight Reaction (WR) has been measured and the corresponding trial Check Balance Moment (trial CBM) has been calculated, do not require balance adjustment. See Fig. 2 for the procedure.

3. Rebalancing a Reworked Rudder Without the Balance Jig

A. Provided that there is space for the addition of the required adjust weights, a rudder may be rebalanced without the Balance Jig if the following criteria can be met.

(1) The Rework Weight (RW) of the repair or repaint (weight added minus weight removed) does not exceed 4 pounds (as calculated in Fig. 1).

(2) The Rework Moment (RM) of the repair or repaint about the hinge line does not exceed 75 pound-inches (as calculated in Fig. 1).

(3) The weight of material removed (or lost due to damage) and the weight of material added must be determined within the tolerance specified in Fig. 8. This tolerance must account for the tolerance of weighing equipment, inaccuracy of estimation of weight of repair materials or paint. See 51-81 for the degree of accuracy that can be achieved with careful workmanship.

(4) The distance from the hinge line to the center of gravity (C.G.) of the rework must be determined to within ±0.2-inch. This tolerance must include any possible error in estimating the position of the C.G., and in measuring the distance to the hinge line due to accuracy of equipment.

(5) Not more than two consecutive repairs or repaintings or combination may be carried out without rebalancing of the rudder on the balance jig. A third repair or repainting necessitates rebalancing in accordance with Fig. 2.

NOTE: Repainting the entire rudder as given in 51-81 par. 4 will meet the conditions of the above criteria.

BOEING PROPRIETARY - Copyright © - Unpublished Work - See title page for details.

4. Sample Calculation - A Repair Which May be Rebalanced Without the Balance Jig

A. The following example demonstrates the type of procedure to be followed when calculating the Rework Moment (RM) to determine the Check Balance Moment (CBM) otherwise known as the Static Balance Hinge Moment (SBHM). Refer to Fig. 1 while following this example.

B. Example 1 - Adjust weights will be required. Assume that a large repair is needed on the rudder 65C25841-1. The current Static Balance Hinge Moment (SBHM) stamped on the nameplate is +399.9 pound-inch. The rudder has been repaired once before. Eighteen out of 36 adjust weights were installed by the manufacturer and 3 weights were added for the first repair, making a total of 21 out of 36 spaces filled.

(1) If the criteria of Par. 3.A. can be met then the rudder can be repaired and rebalanced without the balance jig.

(a) It is estimated that the Rework Weight will not exceed 4.0 pounds.

(b) It is estimated that the Rework Moment will not exceed 75 pound-inches.

(c) A determination is made that the repair can be completed, with good workmanship, to the required accuracy and tolerance specified in 51-81.

(d) The repair will be symmetrical and therefore the distance from the hinge centerline to the repair C.G. will be measurable to within ±0.2-inch.

4. B. (1) (e) Finally, the balance jig will not be required since the above criteria has been met and there has not been two previous reworks done to this surface without rebalancing on the jig.

NOTE: If at any point during the repair or rebalancing it is determined that one or more of the criteria of Par. 3.A. can not be met then the aileron must be rebalanced on the jig.

(2) The rudder is removed from the airplane and a 350° repair in accordance with 51-40-14 is chosen from the repair chart in 55-40-5, Fig. 1.

(3) Determine which repair operations will add weight and which repair operations will remove weight. In this example the replacement repair material is the same as the original material per 51-40-14, Fig. 6, Table I. Therefore, the weight of the replacement core should be equivalent to the removed core, and the weight of replacement plies should be equivalent to the corresponding removed plies. These values cancel from the calculation and the Weight removed becomes zero. The difference between the added and removed paint should also be negligible unless paint was added beyond the boundaries of the paint removed. Therefore the effective Weight added comes from the extra repair material like the foaming adhesive and the adhesive films and the filler ply and the extra repair plies.

(4) The necessary measurements and calculations are made similar to 51-81-01, Example 1 and the following values are found:

Distance = +21.60 inches
Weight removed = Wr = 0 (See previous par. for explanation)
Weight added = Wa = +0.88 lb. (See previous par. for explanation)

4. B. (5) The trial Check Balance Moment is calculated per Fig. 1, step 1.

Y = (D)(0.9903) + 1.14 = (21.60)(0.9903) + 1.14 = +22.53 in.
Rework Weight = RW - Wa - Wr = 0.88 - 0 = +0.88 lb.
Rework Moment = RM = (RW)(Y) = (+0.88)(+22.53) = +19.83 lb-in.
trial CBM = SBHM + RM = (+399.9) + (+19.83) = +419.7 lb-in.

(6) Refer to Figure 1, Table I. The allowable range for a rudder 65C25841-1, -51 after a second rework is +365.0 thru +395.0. A trial Check Balance Moment of +419.7 lb-in. does not fall within this range and therefore the rudder must be rebalanced.

(7) Determine the number of weights required by referring to Fig. 1, steps 5 thru 14 and Tables I and II.

(a) Begin by selecting a desired CBM which is anywhere within the limits of Table I. For this example it must be within the limits after a second repair, +365.0 thru +395.0. A value of +380.0 is chosen because it is in the preferred range.

Selected: desired CBM = +380.0 lb-in.

NOTE: If it turns out that there are not enough weights to balance the rudder then a higher desired CBM may be chosen provided it is within the permissible range.

(b) Calculate the required Change in Moment (required M) needed to achieve this desired CBM:

required M = trial CBM - desired CBM
= (+419.7) - (+380.0)
= +39.7 lb-in.

(c) Refer to Table II. The existing number of weights in the left most column is 21, given earlier in the example.

4. B. (7) (d) Read to the right of row 21 until reading a ΔM value greater or equal to the required ΔM. This corresponds to the ΔM value of 42.5:

ΔM = +42.5 lb-in.

(e) Move up to the top of the column that this ΔM falls in and read the corresponding number of additional adjust weights (M):

N = 10

(f) Remove the balance arm's access doors and install 10 additional adjust weights 69-73666-1 per Fig. 4.

(g) Calculate and record the new Static Balance Hinge Moment (SBHM) from the trial CBM, and the ΔM value from Table II.

new SBHM = trial CBM - M
= (+419.7) - (+42.5)
= +377.2 lb-in.

(h) This new SBHM falls within the specified limits of Table I. Its value is stamped on the nameplate. In the rudder's records the following facts are recorded:
The current SBHM, date of rework, type of rework, location of rework, number of weights added, current total number of weights and the spaces for weight addition remaining. The fact that the balance jig was not used is also recorded.

5. Sample Calculation - A Repair Which May be Rebalanced on the Balance Jig

A. Example 2 - Rebalancing the rudder on the balance jig. The rudder from Example 1 is damaged again and since it has been repaired twice before without the balance jig it must be removed and rebalanced on the jig. The current Static Balance Hinge Moment (SBHM) from the nameplate is +377.2 lb-in. Thirty-one out of 36 adjust weight positions have been filled leaving room for 5 more weights. Refer to Fig. 2 while following this example.

(1) Mount the rudder on the static balance jig and determine the Weight Reaction (WR) and moment arm. For this example the Weight Reaction is downward and therefore negative. The moment arm (B) has a constant value from Fig. 3 and is forward of the hinge line and therefore also negative.

(a) Measure the Weight Reaction:

WR = 23.01 lb.

(b) Determine the value of constant dimensions B from Fig. 3:

B = 17.93 in.

(c) Calculate the trial Check Balance Moment:

trial CBM = (WR)(B)
= (-23.01)(-17.93) = +412.6 lb-in.

(2) Determine whether or not the trial CBM is within permissible range. From Fig. 2, Table I this trial Check Balance Moment of +412.6 lb-in. does not fall under the permissible range after rebalance in the balance jig. The rudder must therefore be rebalanced.

NOTE: If the rudder is being rebalanced on the balance jig then the number of reworks is not significant with respect to Table I.

(3) Select a desired CBM of +380.0. The ΔM is calculated:

ΔM = trial CBM - desired CBM
= (412.6) - (+380.0)
= +32.6 lb-in.

5. A. (4) This ΔM goes beyond the limits of Table II for 31 existing weights in place; therefore, all 5 remaining weights are installed and a new Weight Reaction (WR) is taken.

(a) Measure the Weight Reaction:

WR = -21.85 lb

(b) Determine the value of constant dimension B from Fig. 3:

B = 17.93 in.

(c) Calculate the new trial Check Balance Moment:

new trial CBM = (WR)(B)
= (-21.85)(-17.93)
= +391.8 lb-in.

(5) A trial CBM of +391.8 lb-in. is within the allowable limits of Table I for rebalancing on the balance jig. Once meeting the criteria of Table I this trial CBM becomes the new Static Balance Hinge Moment (SBHM).

new SBHM = trial CBM or new trial CBM = +391.8 lb-in.

This new SBHM is stamped on the nameplate. The fact that the rudder has been repaired off the airplane and rebalanced on the balance jig is also recorded, along with the repair type, location, date and the number of spaces available for weight addition. In this example there are no longer any spaces available but the SBHM is well within the allowable range of +350 thru +410 leaving some room for weight variation resulting from later repairs.

OFF-THE-JIG REBALANCE INSTRUCTIONS

1. Calculate the trial Check Balance Moment (Trial CBM) and rebalance the rudder. (Maintain sign conventions per 51-81 except where noted.)

   (A) Measure the distance D (see Fig. 3).
   D =_____in.

   (B) Calculate the distance Y (see Fig. 3).
   Y = (D)(cos 7°) + 1.14
   =(D)(0.9925) + 1.14
   =_____in.

   (C) Weigh or calculate Weight removed (Wr).
   Wr = +_____lb. (KEEP POSITIVE)

   (D) Calculate the Weight added (Wa).
   Wa =_____lb.

   (E) Calculate Rework Weight (RW). RW is the net change in weight due to rework.
   RW = Wa - Wr =_____lb.

   (F) Calculate the Rework Moment (RM). RM is the net change in balance moment due to rework.
   RM = (RW)(Y) =_____lb-in.

   (G) Calculate the trial Check Balance Moment (trial CBM). The trial CBM is the final moment, new Static Balance Hinge Moment, if within given limits Static Balance Hinge Moment (SBHM) is the previous final moment value stamped on the nameplate of each control surface.
   trial CBM = SBHM + RM =_____lb-in.

2. Check that the criteria of par. 3.A. (in the text) have been met. If they have, then continue, if not, balance on the jig per Fig. 2.

3. If the calculated trial CBM is within allowable range of Table I, then go to step 13. If not, then the rudder must be rebalanced. (Proceed to step 4.)

4. To rebalance the rudder, add or remove weights using Table II and the following instructions until the trial CBM is within allowable limits of Table I.

   NOTE: Table II works differently than the aileron and elevator tables because with the rudder the moment arm varies with the addition of weights.

5. Select a Check Balance Moment value from Table I which is within allowable limits. Example: The permissible range after a second rework without the balance jig is +365.0 thru +395.0 lb-in. A Check Balance Moment value of +390.0 falls well within this range. A value of +380.0 would also fall within this range as well as the preferred range after a second rework. The value selected will be referred to as the desired CBM.

6. Calculate the required Change in Moment (required ΔM) needed to achieve this desired CBM:

   required ΔM = trial CMB - desired CBM
   =_____lb-in.

7. Refer to the left most colums of Table II. Select the row which reflects the number of existing adjust weights already in place on the rudder.

8. Move to the right of this effective row until reaching a moment value which is greater than or equal to the calculated required ΔM.

   NOTE: If the required ΔM is greater than values given in the effective row of Table II then repeat steps 5. thru 8. selecting a higher desired CBM (still within allowable range). If this fails, then the rudder must be rebalanced on the jig per Fig. 2, and where the limits are still not met, then the rudder must be reconditioned or replaced.

9. Move up to the top of the column in which ΔM falls and record the number of additional adjust weights (N) required to achieve this ΔM value.

10. Remove the fairing skin (if not already removed) around the rudder balance arm. See Fig. 6 for location of the balance arm.

11. Remove the balance arm's access doors and install (N) adjust weights 69-73666-1 (see Fig. 4).

    NOTE: Rudder adjust weights must be distributed evenly on each side, up to a maximum of eighteen per side. An odd number adjust weights may be installed on either side.

Rebalancing a Reworked Rudder Without the Balance Jig
Figure 1 (Sheet 1)

228859

12. Calculate and record the new trial CBM from the old calculated trial CBM and the ΔM value from Table II:
    new trial CBM = trial CBM − ΔM
    =_____lb-in.

13. When the trial CBM or the new trial CBM is within allowable limits of Table I, then:
    new SBHM = trial CBM or new trial CBM
    =_____lb-in.

14. Stamp this SBHM on the rudder nameplate. The rudder's records should show:

    (A) Current SBHM.

    (B) Date of rework.

    (C) Type of rework.

    (D) Location of rework.

    (D) Number of weights added.

    (F) Current total number of weights (weights added plus existing weights), and the spaces remaining.

    (G) State whether or not the jig was used.

RUDDER ASSEMBLIES	ALLOWABLE CHECK BALANCE MOMENT (CBM) RANGE OR STATIC BALANCE HINGE MOMENT (SBHM) RANGE			
	PREFERRED RANGE AFTER FIRST REWORK WITHOUT THE BALANCE JIG (POUND-INCHES)	PERMISSIBLE RANGE AFTER FIRST REWORK WITHOUT THE BALANCE JIG (POUND-INCHES)	PREFERRED RANGE AFTER SECOND REWORK WITHOUT THE BALANCE JIG (POUND-INCHES)	PERMISSIBLE RANGE AFTER SECOND REWORK WITHOUT THE BALANCE JIG (POUND-INCHES)
ALL RUDDER ASSEMBLIES 65C25841	+307.5 THRU +380.0 INCLUSIVE	+307.5 THRU +402.5 INCLUSIVE	+315.0 THRU +380.0 INCLUSIVE	+315.0 THRU +395.0 INCLUSIVE

TABLE I

NOTES

- TABLE I APPLIES WHEN THE RUDDER IS REBALANCED WITHOUT THE BALANCE JIG
- SEE FIG. 2 FOR REBALANCING A REWORKED ELEVATOR ON THE BALANCE JIG
- IF REQUIRED, REMOVE THE RUDDER FROM THE AIRPLANE PER 27-21 OF THE 737 MAINTENANCE MANUAL
- IF THIS IS THE THIRD OR LATER REWORK SINCE THE LAST REBALANCING ON THE BALANCE JIG, THEN THE JIG MUST BE USED
- FOR A COMPLETE PAINT SEE 51-81 PAR. 4 AND CALCULATE A RM AND TRIAL CBM FROM THE INSTRUCTIONS LOCATED THERE AND PROCEED TO STEP 2 IN THIS FIGURE. FOR PARTIAL REPAINT USE TABLE IV IN 51-81 TO CALCULATE THE WEIGHT ADDED (Wa) AND PROCEED THRU STEPS 1.(A) THRU 1.(G) ONLY IF THE CRITERIA OF PAR. 3.A. (IN THE TEXT) CAN BE MET. OTHERWISE REBALANCE THE ELEVATOR ON THE JIG

Rebalancing a Reworked Rudder Without the Balance Jig
Figure 1 (Sheet 2)

RUDDER BALANCE TABLE FOR RUDDER ASSEMBLIES 65C25841-1,-51,-53,-55

THE TOTAL CHANGE IN MOMENT (ΔM) DUE TO ADDING (N) WEIGHTS TO EXISTING WEIGHTS
(POSITIVE VALUES IN LB-IN.)

NUMBER OF EXISTING WEIGHTS	NUMBER OF ADJUST WEIGHTS (N) 69-73666-1 TO BE ADDED TO EXISTING WEIGHTS																
	1	2	3	4	5	6	7	8	9	10	11	12	13	14	15	16	17
0	4.50	9.00	13.5	18.0	22.5	27.0	31.4	35.9	40.3	44.8	49.2	53.6	58.0	62.4	66.7	71.1	75.4
1	4.50	9.00	13.5	18.0	22.5	26.9	31.4	35.8	40.3	44.7	49.1	53.5	57.9	62.2	66.6	70.9	75.3
2	4.50	9.00	13.5	18.0	22.4	26.9	31.3	35.8	40.2	44.6	49.0	53.4	57.7	62.1	66.4	70.8	75.1
3	4.50	9.00	13.5	17.9	22.4	26.8	31.3	35.7	40.1	44.5	48.9	53.2	57.6	61.9	66.3	70.6	75.0
4	4.50	9.00	13.4	17.9	22.3	26.8	31.2	35.6	40.0	44.4	48.7	53.1	57.4	61.8	66.1	70.5	74.8
5	4.50	8.95	13.4	17.8	22.3	26.7	31.1	35.5	39.9	44.2	48.6	52.9	57.3	61.6	66.0	70.3	74.6
6	4.45	8.90	13.3	17.8	22.2	26.6	31.0	35.4	39.7	44.1	48.4	52.8	57.1	61.5	65.8	70.1	74.4
7	4.45	8.90	13.3	17.7	22.1	26.5	30.9	35.3	39.6	44.0	48.3	52.7	57.0	61.3	65.6	69.9	74.2
8	4.45	8.90	13.3	17.7	22.1	26.5	30.8	35.2	39.5	43.9	48.2	52.6	56.9	61.2	65.5	69.8	74.0
9	4.45	8.85	13.2	17.6	22.0	26.4	30.7	35.1	39.4	43.8	48.1	52.4	56.7	61.0	65.3	69.6	73.8
10	4.40	8.80	13.2	17.6	21.9	26.3	30.6	35.0	39.3	43.7	48.0	52.3	56.6	60.9	65.1	69.4	73.6
11	4.40	8.80	13.2	17.5	21.9	26.2	30.6	34.9	39.3	43.6	47.9	52.2	56.5	60.7	65.0	69.2	73.5
12	4.40	8.80	13.1	17.5	21.8	26.2	30.5	34.9	39.2	43.5	47.8	52.1	56.3	60.6	64.8	69.1	73.3
13	4.40	8.75	13.1	17.4	21.8	26.1	30.5	34.8	39.1	43.4	47.7	51.9	56.2	60.4	64.7	68.9	73.1
14	4.35	8.70	13.0	17.4	21.7	26.1	30.4	34.7	39.0	43.3	47.5	51.8	56.0	60.3	64.5	68.7	72.9
15	4.35	8.70	13.0	17.4	21.7	26.0	30.3	34.6	38.9	43.2	47.4	51.7	55.9	60.1	64.3	68.5	72.7
16	4.35	8.70	13.0	17.4	21.7	26.0	30.3	34.6	38.8	43.1	47.3	51.6	55.8	60.0	64.2	68.4	72.5
17	4.35	8.70	13.0	17.3	21.6	25.9	30.2	34.5	38.7	43.0	47.2	51.4	55.6	59.8	64.0	68.2	72.3
18	4.35	8.70	13.0	17.3	21.6	25.9	30.1	34.4	38.6	42.9	47.1	51.3	55.5	59.7	63.8	68.0	72.1
19	4.35	8.65	12.9	17.2	21.5	25.8	30.0	34.3	38.5	42.7	46.9	51.1	55.3	59.5	63.6	67.8	71.9
20	4.30	8.60	12.9	17.2	21.4	25.7	29.9	34.2	38.4	42.6	46.8	51.0	55.1	59.3	63.4	67.6	
21	4.30	8.60	12.9	17.1	21.4	25.6	29.9	34.1	38.3	42.5	46.7	50.8	55.0	59.1	63.3		
22	4.30	8.60	12.8	17.1	21.3	25.6	29.8	34.0	38.2	42.4	46.5	50.7	54.8	59.0			
23	4.30	8.55	12.8	17.0	21.3	25.5	29.7	33.9	38.1	42.2	46.4	50.5	54.7				
24	4.25	8.50	12.7	17.0	21.2	25.4	29.6	33.8	37.9	42.1	46.2	50.4					
25	4.25	8.50	12.7	16.9	21.1	25.3	29.5	33.7	37.8	42.0	46.1						
26	4.25	8.50	12.7	16.9	21.1	25.3	29.4	33.6	37.7	41.9							
27	4.25	8.45	12.6	16.8	21.0	25.2	29.3	33.5	37.6								
28	4.20	8.40	12.6	16.8	20.9	25.1	29.2	33.4									
29	4.20	8.40	12.6	16.7	20.9	25.0	29.2										
30	4.20	8.40	12.5	16.7	20.8	25.0											
31	4.20	8.35	12.5	16.6	20.8												
32	4.15	8.30	12.4	16.6													
33	4.15	8.30	12.4														
34	4.15	8.30															
35	4.15																
36																	

TABLE II

Rebalancing a Reworked Rudder Without the Balance Jig
Figure 1 (Sheet 3)

ON-THE-JIG REBALANCE INSTRUCTIONS

1. After the rework is complete, mount the rudder (either surface up) on a balance stand and static balance fittings similar to illustration in Fig. 7. See Fig. 6 for mounting point locations. When mounted as shown in Fig. 7 the rudder must be free to rotate a few degrees about the support fittings without binding. See Fig. 5 for the configuration of the rudder at time of balancing on the balance jig.

2. With the chord plane horizontal, measure the Weight Reaction (WR) at a known moment arm (B). The WR will be taken from the drain hole location on the balance arm (see Fig. 4).

3. Calculate a trial Check Balance Moment by multiplying the WR in pounds by the moment arm (B) given in Fig. 3 in inches (B = -17.93).
   trial CBM = (WR)(B)=(WR)(-17.93)
   =_____lb-in.

   NOTE: Take care to observe the proper sign conventions listed in 51-81, par. 7. In this case both WR and B are negative, making the trial CBM positive. WR is negative because the reaction is down and B is negative because it is forward of the hinge line.

4. If the calculated trial CBM is within allowable range of Table I, then go to step 7. If not, then the rudder must be rebalanced. (Proceed to step 5.)

5. Remove the balance arm's access doors to install. Adjust weights 69-73666-1 (see Fig. 4).

   NOTE: Rudder adjust weights must be distributed evenly on each side, up to a maximum of eighteen per side. An odd number adjust weights may be installed on either side.

6. Determine the number of additional adjust weights (N) required by adding or removing adjust weights and remeasuring the WR and recalculating the trial CBM until it is within allowable limits of Table I. Optional: Use Fig. 1, Table II and the procedure in Fig. 1, steps 2 thru 12 (still use Table I in Fig. 2). Remeasure the WR and recalculate the trial CBM. If it is not within allowable range, add or remove weights until it is.

7. When the trial CBM or the new trial CBM is within allowable limits of Table I, then:

   New SBHM = trial CBM or new trial CBM
   =_____lb-in.

8. Stamp this SBHM on the rudder nameplate. The rudder's records should show:

   (A) Current SBHM.

   (B) Date of rework.

   (C) Type of rework.

   (D) Location of rework.

   (E) Number of weights added.

   (F) Current total number of weights (weights added plus existing weights), and the spaces remaining.

   (G) State whether or not the jig was used.

ALLOWABLE CHECK BALANCE MOMENT (CBM) RANGE OR STATIC BALANCE HINGE MOMENT (SBHM) RANGE		
RUDDER ASSEMBLIES	PREFERRED RANGE AFTER REBALANCE ON BALANCE JIG (POUND-INCHES)	PERMISSIBLE RANGE AFTER REBALANCE ON BALANCE JIG (POUND-INCHES)
ALL ASSEMBLIES 65C25841 EXCEPT FOR -53 AND -55	+300.0 THRU +380.0 INCLUSIVE	+300.0 THRU +410.0 INCLUSIVE
65C25841-53 AND -55	+300.0 THRU +356.0 INCLUSIVE	+300.0 THRU +410.0 INCLUSIVE

TABLE I

Rebalancing a Reworked Rudder on the Balance Jig
Figure 2

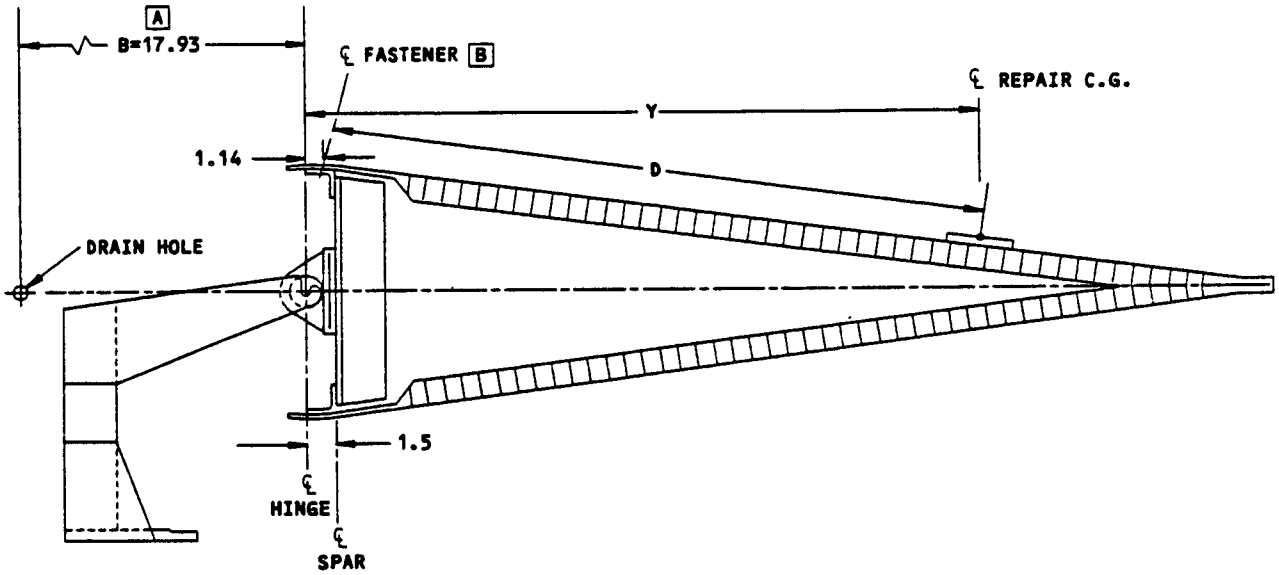

RUDDER STA 80.0

NOTE

A DIMENSION B IS MEASURED PERPENDICULAR TO CENTERLINE OF HINGE. SEE FIGURE 3

B FASTENER CENTERLINE ALONG LENGTH OF RUDDER EXCEPT AT TIP ARM AND IN THE IMMEDIATE VICINITY OF THE RUDDER HINGES (USE THE TRACE OF THE FASTENER CENTERLINE IN THESE AREAS)

Rudder Repair Moment Arm Diagram
Figure 3

228862

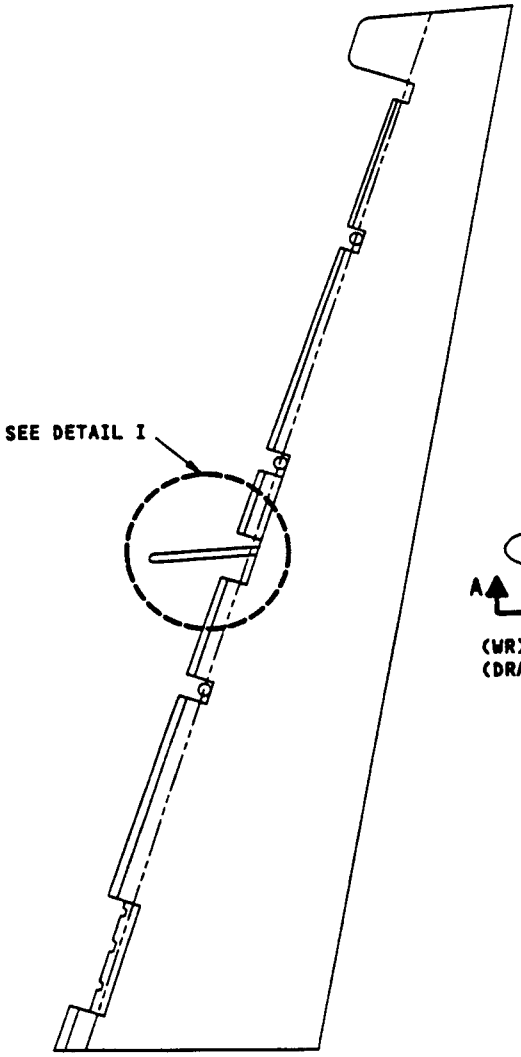

LH SIDE VIEW - RUDDER

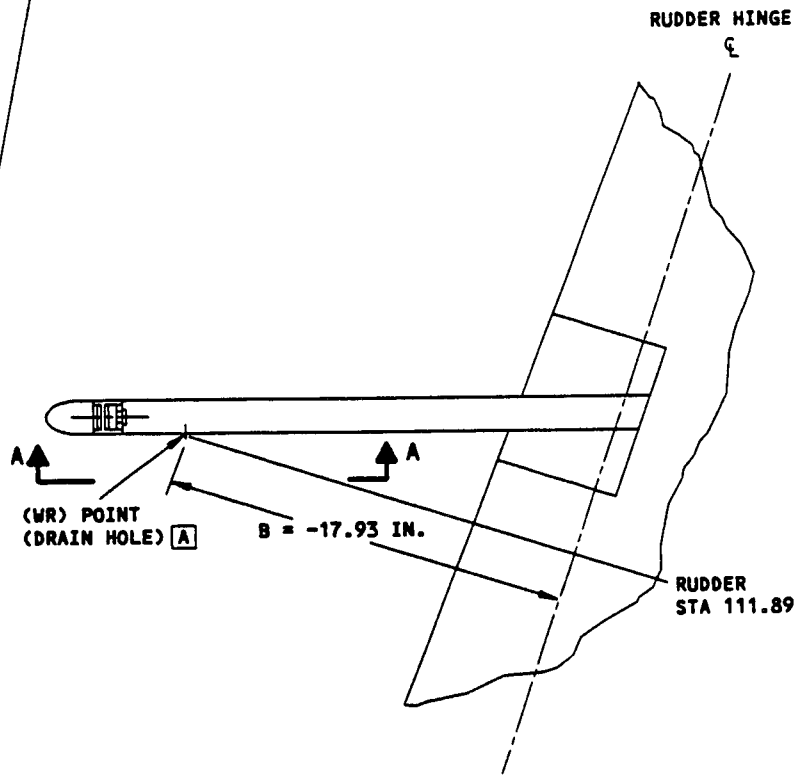

DETAIL I

NOTES

A THE WEIGHT REACTION (WR) MAY BE TAKEN AT THE 0.40 DIAMETER DRAIN HOLES IN THE LOWER SURFACE OF BALANCE ARM 65C25879. THE WEIGHT REACTION MOMENT ARM IS 17.93 INCHES AS SHOWN

B RUDDER ADJUST WEIGHTS MUST BE DISTRIBUTED EVENLY ON EACH SIDE, UP TO A MAXIMUM OF EIGHTEEN PER SIDE. AN ODD NUMBER ADJUST WEIGHT MAY BE INSTALLED ON EITHER SIDE

C FINISHED PART WEIGHT 0.23 ± 0.03 LBS. TUNGSTEN BASE HIGH DENSITY METAL PER MIL-T-21014 TYPE II CLASS (OPTIONAL)

Rudder Balance Arm and Adjust Weights
Figure 4 (Sheet 1)

228868

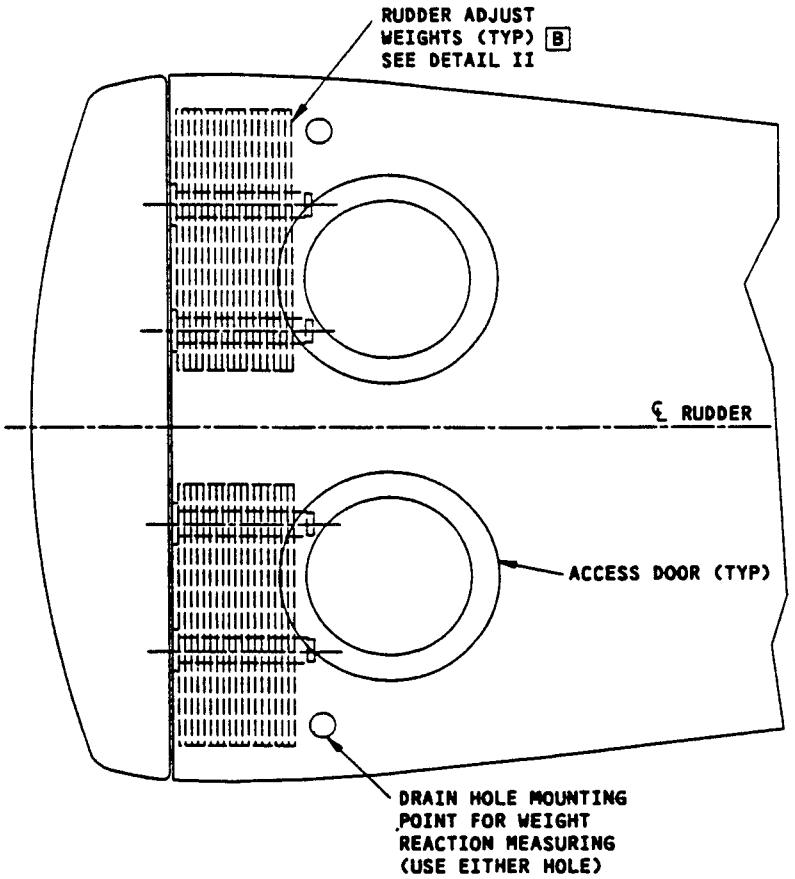

SECTION A-A

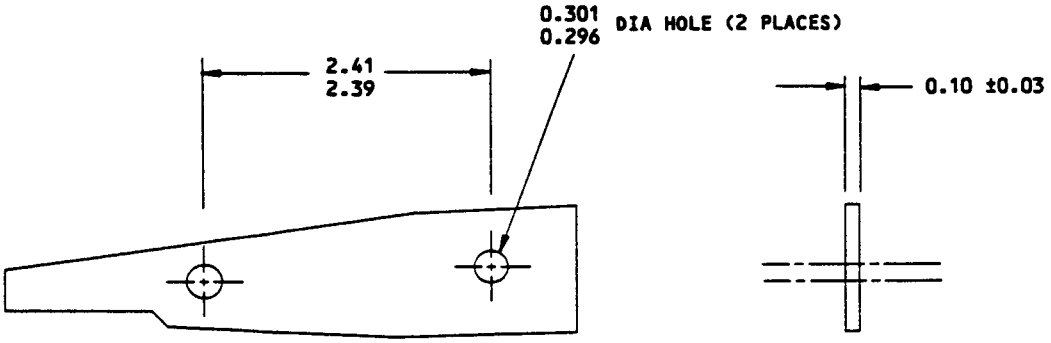

RUDDER ADJUST WEIGHT 69-73666-1 C
DETAIL II

Rudder Balance Arm and Adjust Weights
Figure 4 (Sheet 2)

228863

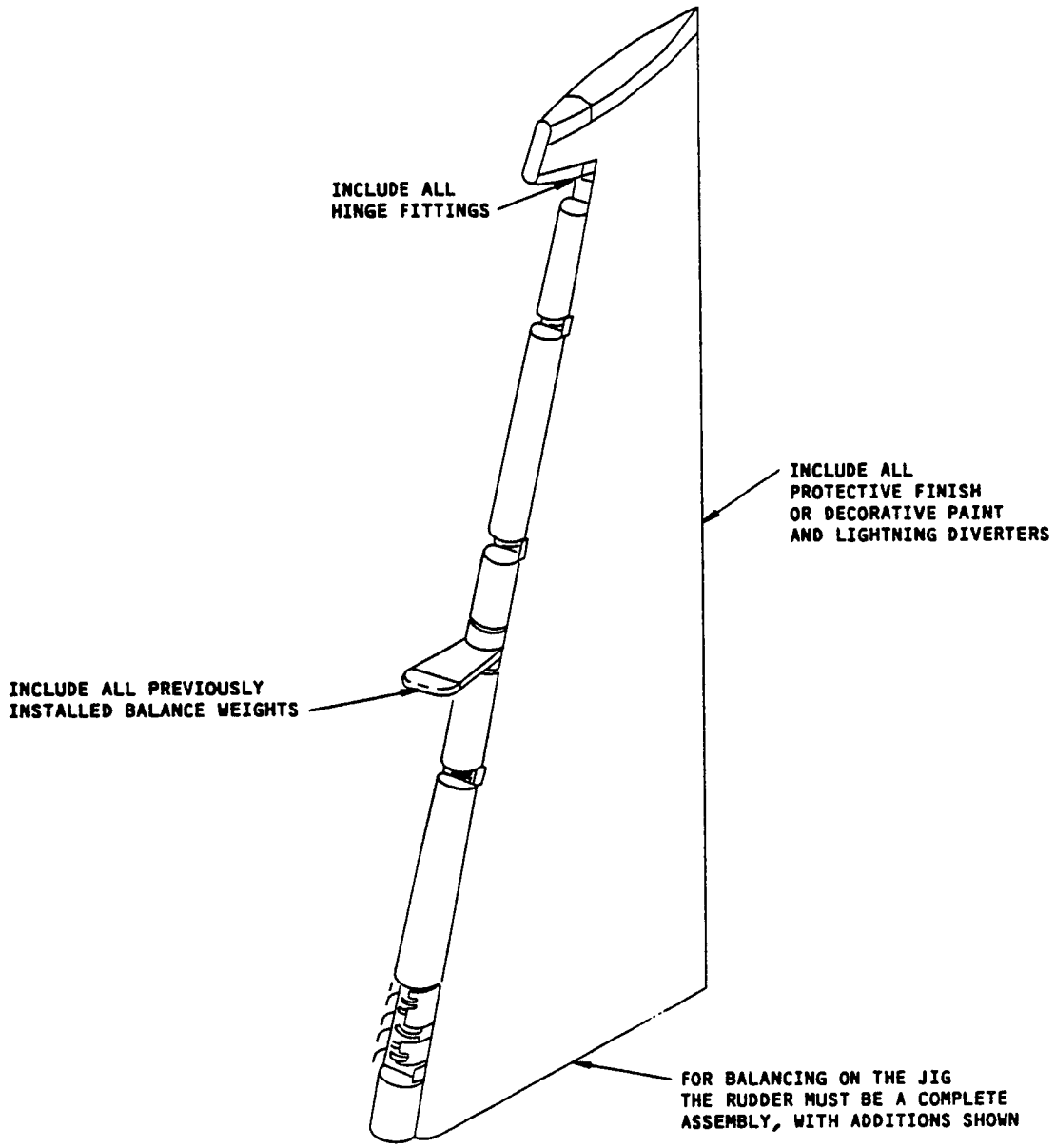

NOTE

- REMOVE ALL BONDING JUMBERS
- REMOVE NUTS, BOLTS, AND WASHERS THAT ATTACH RUDDER TO VERTICAL STABILIZER

Configuration of Rudder at Time of Balancing On the Balance Jig
Figure 5

228869

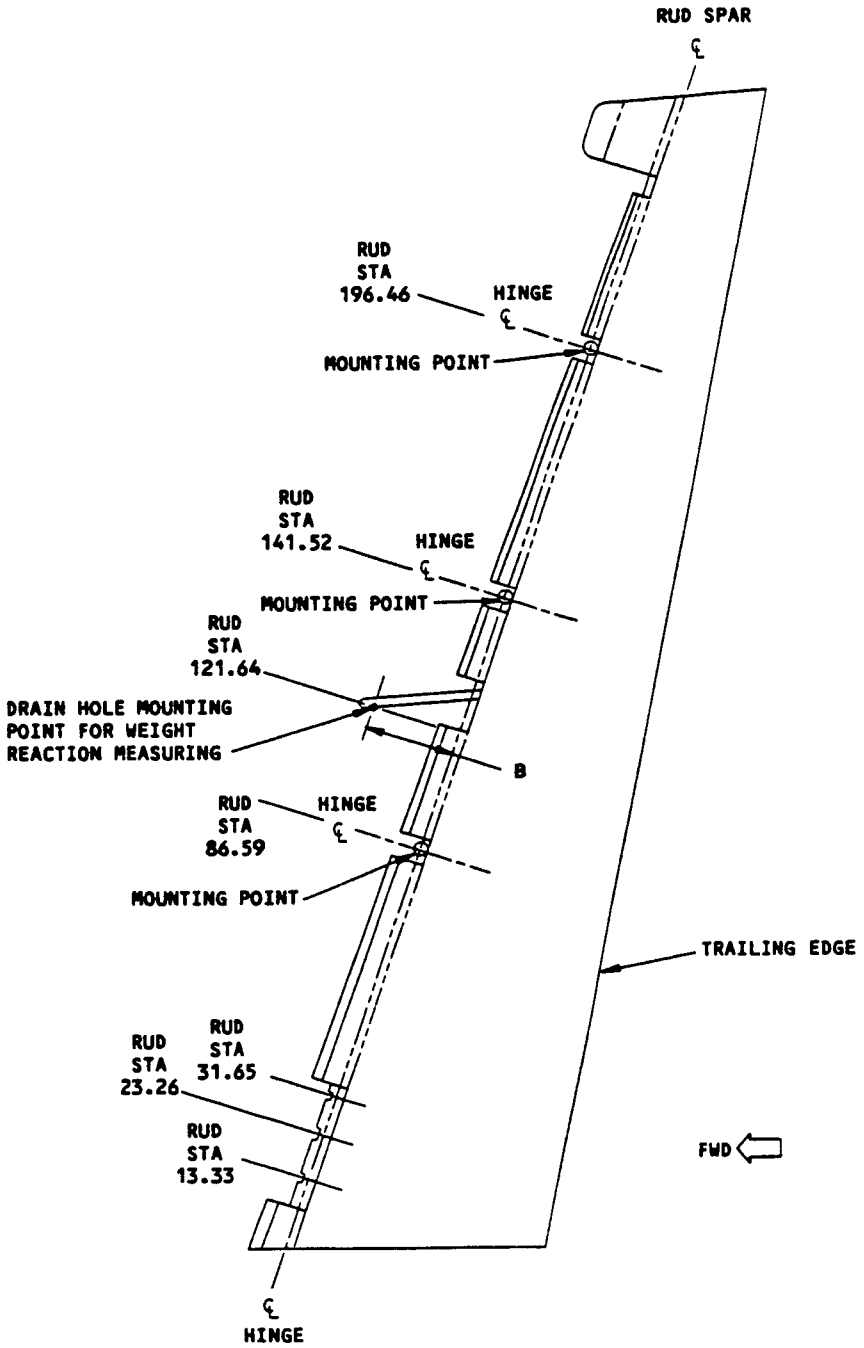

LEFT HAND
SIDE VIEW

Rudder Mounting Point Location Diagram
Figure 6

228864

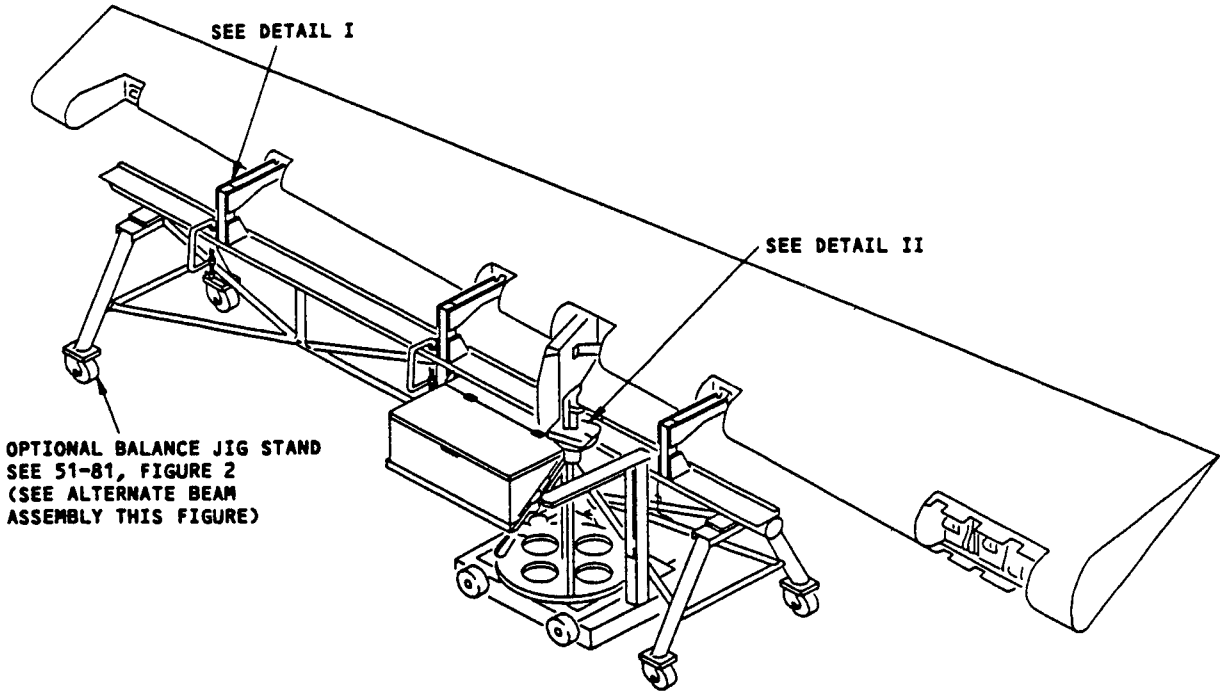

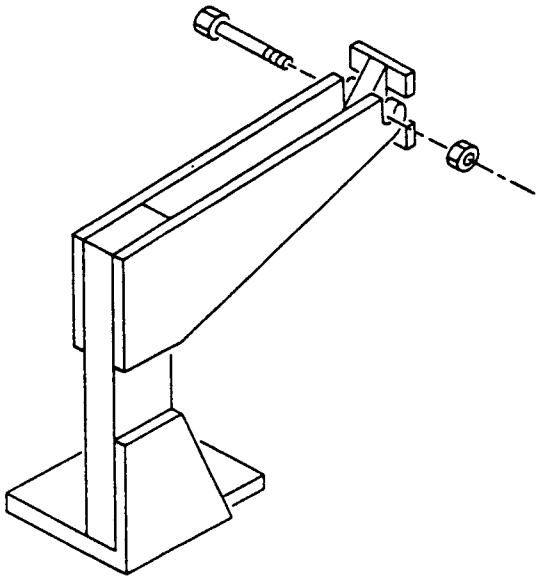

AFT HINGE SUPPORT
DETAIL I

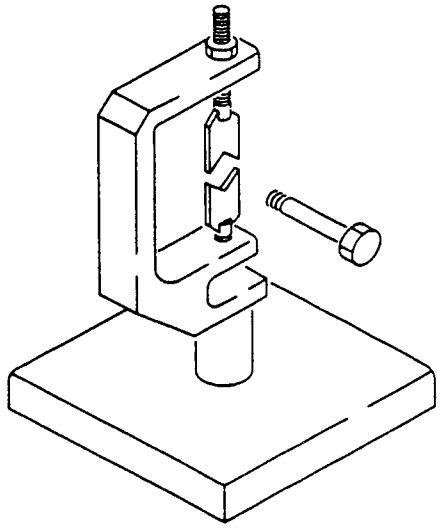

FWD HINGE SUPPORT
DETAIL II

Rudder Support During Balancing
Figure 7 (Sheet 1)

228870

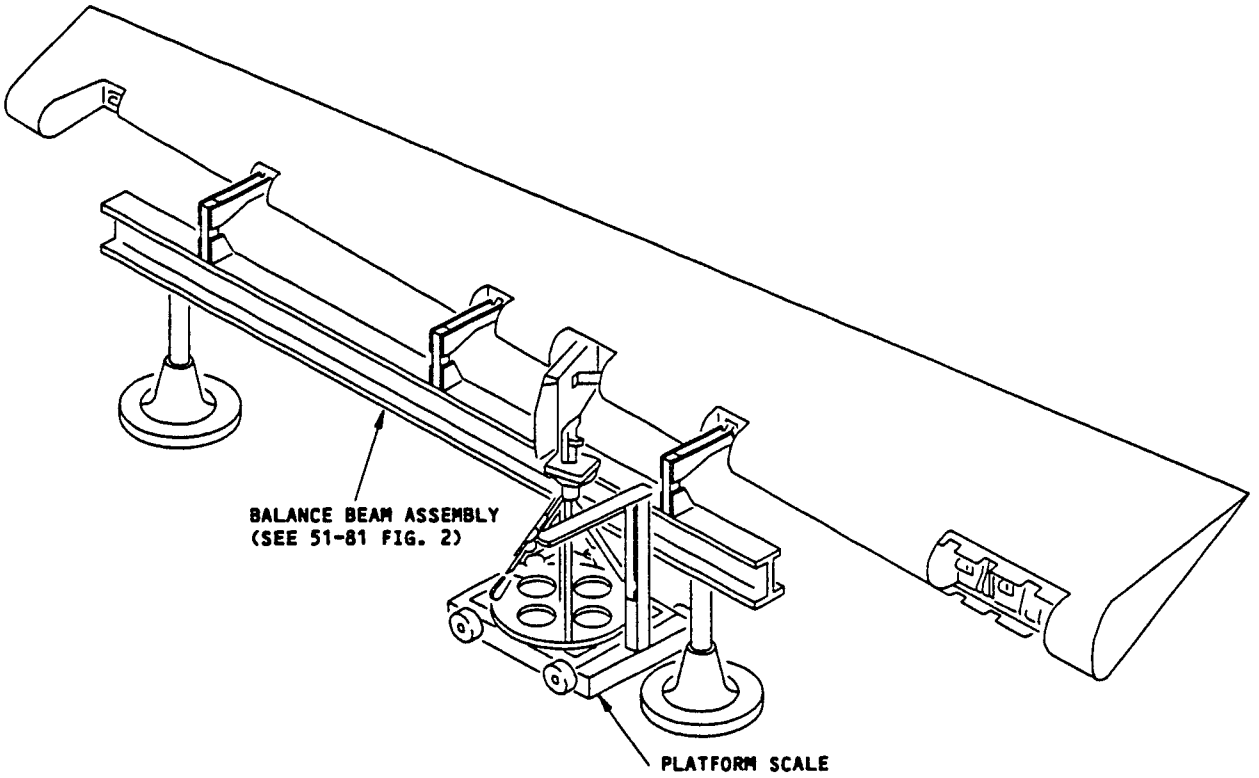

Rudder Support During Balancing
Figure 7 (Sheet 2)

228865

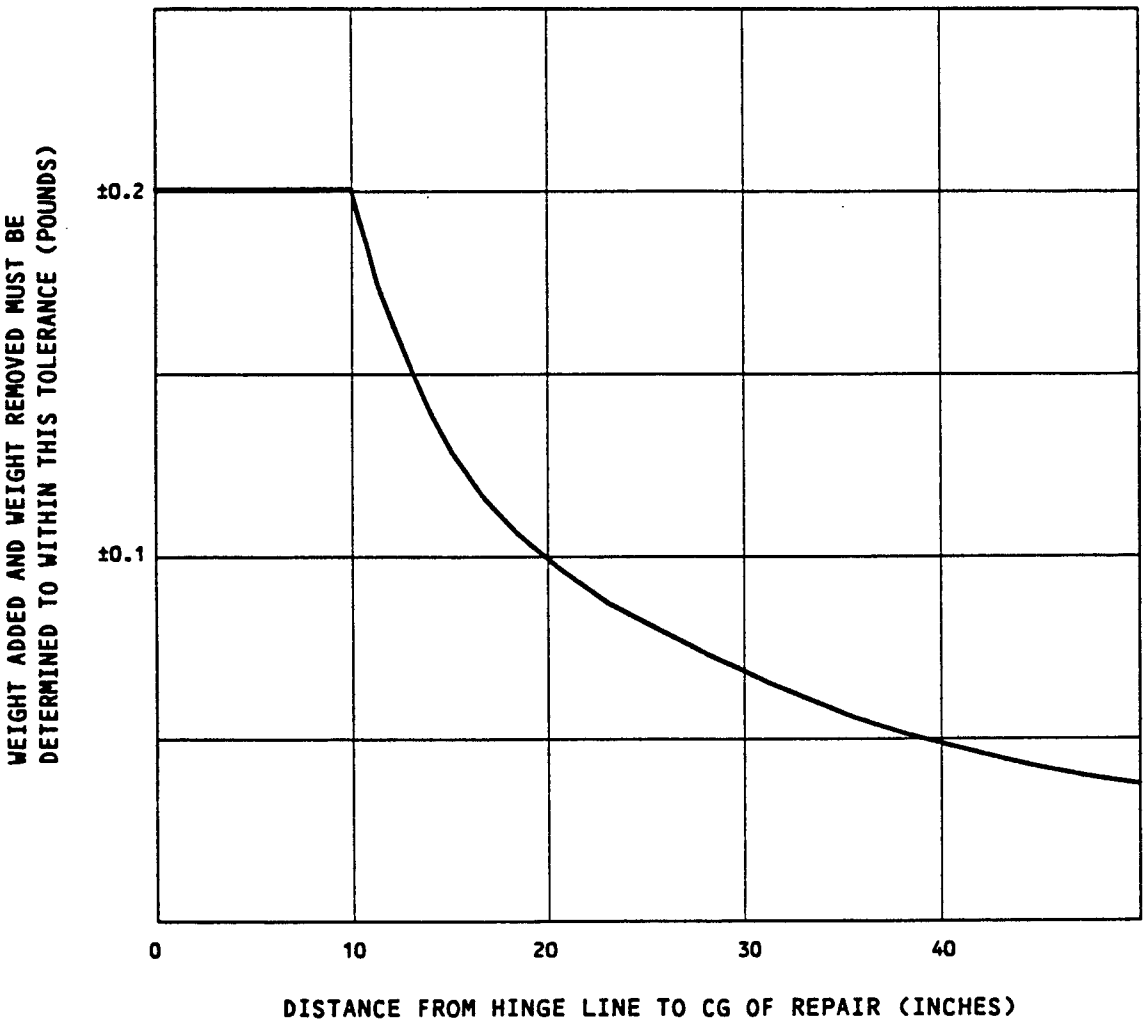

Weight Tolerance Requirements for Balancing Rudder on Airplane
Figure 8

228872